LEGANZA (MY2000)
Service Manual

FOREWORD

This manual includes procedures for maintenance, adjustment, service operations, and removal and installation of components for the LEGANZA vehicle.

When reference is made in this manual to a brand name, number, or specific tool, an equivalent product may be used in place of the recommended item.

All information, illustrations and specifications contained in this manual are based on the latest product information available at the time of publication approval. The right is reserved to make changes at any time without notice.

Daewoo Motor Company, Limited
Overseas Technical Service Department
391-9 Chong Chon- Dong, Pu Pyung-Gu,
Inchon, Korea
Tel: 82-32-509-4150 ~ 4159, 4170
Fax: 82-32-509-4160 / 4169
Email: m8610452@dwmc.co.kr
m9310883@dwmc.co.kr

Daewoo Motor Company, Limited
All Rights Reserved

No part of this publication may be reproduced, stored in any retrieval system or transmitted, in any form or by any means, including but not limited to electronic, mechanical, photocopying, recording or otherwise, without the prior written permission of Daewoo Motor Company, Limited.

DAEWOO PUBLICATION COMMENT FORM

Use this form to advise us of any errors you might find in this publication. We also welcome your suggestions that might help us improve Daewoo publications.

Publication that contains error: _____

Page number where the error appears: _____

Figure number where the error appears: _____

Vehicle application and system identification: _____

Describe the error found or your suggestion in detail. Please attach additional pages as necessary. Please attach a copy of illustrations that contain errors.

From: Name _____

Address _____ Country _____

Signature _____ Date _____ Phone _____

Mail To: Daewoo Motor Company, Limited
Overseas Technical Service Department
409–7 Chong Chon-Dong, Pu Pyong-Gu
Inchon, Korea

TABLE OF CONTENTS

Section 0B General Information

Section 1 Engine
- Section 1A General Engine Information
- Section 1B SOHC Engine Mechanical
- Section 1C DOHC Engine Mechanical
- Section 1D Engine Cooling
- Section 1E Engine Electrical
- Section 1F Engine Controls
- Section 1G Engine Exhaust

Section 2 Suspension
- Section 2A Suspension Diagnosis
- Section 2B Wheel Alignment
- Section 2C Front Suspension
- Section 2D Rear Suspension
- Section 2E Tires and Wheels

Section 3 Driveline/Axle
- Section 3A Automatic Transaxle Drive Axle
- Section 3B Manual Transaxle Drive Axle

Section 4 Brakes
- Section 4A Hydraulic Brakes
- Section 4B Master Cylinder
- Section 4C Power Booster
- Section 4D Front Disc Brakes
- Section 4E Rear Disc Brakes
- Section 4F Antilock Brake System and Tracking Control System
- Section 4G Parking Brake

Section 5 Transmission/Transaxle
- Section 5A2 ZF 4 HP 14 Automatic Transaxle
- Section 5A3 AISIN 50–40LE Automatic Transaxle
- Section 5B Five-Speed Manual Transaxle
- Section 5C Clutch

Section 6 Steering
- Section 6A Power Steering System
- Section 6B Power Steering Pump
- Section 6C Power Steering Gear
- Section 6E Steering Wheel and Column

Section 7 HVAC (Heating, Ventilation, and Air Conditioning)
- Section 7A Heating and Ventilation System
- Section 7B Manual Control Heating, Ventilation, and Air Conditioning System
- Section 7D Automatic Temperature Control Heating, Ventilation, and Air Conditioning System

Section 8 Restraints
- Section 8A Seat Belts
- Section 8B Supplemental Inflatable Restraints (SIR)

Section 9 Body and Accessories
- Section 9A Body Wiring System
- Section 9B Lighting Systems
- Section 9C Horns
- Section 9D Wipers/Washer Systems
- Section 9E Intrumentation/Driver Information
- Section 9F Audio Systems
- Section 9G Interior Trim
- Section 9H Seats
- Section 9I Waterleaks
- Section 9J Windnoise
- Section 9K Squeaks and Rattles
- Section 9L Glass and Mirrors
- Section 9M Exterior Trim
- Section 9N Frame and Underbody
- Section 9O Bumpers and Fascias
- Section 9P Doors
- Section 9Q Roof
- Section 9R Body Front End
- Section 9S Body Rear End
- Section 9T Immobilizer Anti-Theft System
- Section 9U Cruise Control System

SECTION 0B

GENERAL INFORMATION

TABLE OF CONTENTS

Specifications 0B-1
Technical Data 0B-1
Vehicle Dimensions and Weights 0B-5
Standard Bolt Specifications 0B-6
Maintenance and Repair 0B-7
Maintenance and Lubrication 0B-7
Normal Vehicle Use 0B-7
Explanation of Scheduled Maintenance Services 0B-7
Scheduled Maintenance Charts 0B-9
Owner Inspections and Services 0B-11
While Operating the Vehicle 0B-11
At Each Fuel Fill 0B-11
At Least Monthly 0B-12
At Least Twice a Year 0B-12
Time the Oil Is Changed 0B-13
Least Annually 0B-14
Recommended Fluids and Lubricants 0B-15
Recommended Automatic Transaxle Fluids . . . 0B-16
General Description and System Operation 0B-17
Repair Instruction 0B-17
General Description 0B-17
Vehicle Identifications 0B-17
Vehicle Lifting Procedures 0B-22

SPECIFICATIONS

TECHNICAL DATA

Performance - Manual Transaxle

Application	2.0L SOHC	2.0L DOHC	2.2L DOHC
Maximum Speed (km/h)	188	206	TBD
Gradeability (tan ∅)	0.54	0.57	TBD
Minimum Turning Radius (m)	5.5	5.5	TBD

Performance - Automatic Transaxle

Application	2.0L SOHC	2.0L DOHC	2.2L DOHC
Maximum Speed (km/h)	187	192	TBD
Gradeability (tan ∅)	0.62	0.65	TBD
Minimum Turning Radius (m)	5.5	5.5	TBD

Engine

Application	2.0L SOHC	2.0L DOHC	2.2L DOHC
Engine Type	Overhead Cam L-4	Dual Overhead Cam L-4	Dual Overhead Cam L-4
Bore (mm)	86	86	86
Stroke (mm)	86	86	94.6
Total Displacement (cm^3)	1,998	1,998	2,198
Compression Ratio	9.2:1	9.6:1	9.6:1
Maximum Power (kw/rpm)	78 (at 5,000)	98 (at 5,400)	TBD
Maximum Torque (N•m/rpm)	178.5 (at 4,000)	184 (at 4,600)	TBD

Ignition System

Application	2.0L SOHC	2.0L DOHC	2.2L DOHC
Ignition Type	Direct Ignition System	Direct Ignition System	Direct Ignition System
Ignition Timing (° BTDC)	8	5	6
Ignition Sequence	1-3-4-2	1-3-4-2	1-3-4-2
Spark Plug Gap (mm)	0.9	0.8	0.8 / 1.0
Spark Plug Maker	Bosch	Bosch	Bosch
Spark Plug Type	WR8DC	FR8LDC4	FR8LDC4 / FLR8LDCU

Clutch - Manual Transaxle

Application	2.0L SOHC	2.0L DOHC	2.2L DOHC
Type	Single Dry Plate	Single Dry Plate	Single Dry Plate
Outside Diameter (mm)	215	225	225
Inside Diameter (mm)	145	150	150
Thickness (mm)	3.4	3.4	3.4
Fluid Capacity	Common Use; Brake Fluid	Common Use; Brake Fluid	Common Use; Brake Fluid

Manual Transaxle

Application	2.0L SOHC	2.0L DOHC	2.2L DOHC
Maker	DWMC	DWMC	DWMC
Type or Model	D-16	D-20	D-20
Gear Ratio:	-	-	-
1st	3.545:1	3.545:1	3.545:1
2nd	2.048:1	2.158:1	2.158:1
3rd	1.346:1	1.478:1	1.478:1
4th	0.971:1	1.129:1	1.129:1
5th	0.763:1	0.886:1	0.886:1
Reverse	3.333:1	3.333:1	3.333:1
Final Drive Ratio	3.944:1	3.722:1	3.722:1
Oil Capacity (L)	1.8	1.8	1.8

Automatic Transaxle

Application	2.0L SOHC	2.0L DOHC	2.2L DOHC
Maker	ZF	ZF	AISIN
Type or Model	4HP14	4HP14	50-40LE
Gear Ratio:	-	-	-
1st	2.412:1	2.412:1	3.900:1
2nd	1.369:1	1.369:1	2.228:1
3rd	1.000:1	1.000:1	1.477:1
4th	0.739:1	0.739:1	1.062:1
Reverse	2.828:1	2.828:1	4.271:1
Final Drive Ratio	4.225:1	3.979:1	2.654:1
Oil Capacity for Replacement (L)	2.5	2.5	6.5～7.0

Brake

Application	2.0L SOHC	2.0L DOHC	2.2L DOHC
Booster Size:	-	-	-
Booster 1 (in.)	7	7	7
Booster 2 (in.)	8	8	8
Master Cylinder Diameter (mm)	23.8	23.8	23.8
Booster Ratio	5.0:1	5.0:1	5.0:1
Front Brake:	-	-	-
Disc Type	Ventilated	Ventilated	Ventilated
Rear Brake:	-	-	-
Disc Type	Solid	Solid	Solid
Fluid Capacity (L)	0.5	0.5	0.5

Tire and Wheel

Application	2.0L SOHC	2.0L DOHC	2.2L DOHC
Standard Tire Size	195/70R14	205/60R15	205/60R15
Standard Wheel Size	5.5JX14	6.0JX15	6.0JX15
Inflation Pressure at Full Load:	-	-	-
195/70R14:	-	-	-
Front	29	-	-
Rear	29	-	-
205/60R15:	-	-	-
Front	-	29	29
Rear	-	29	29

Steering System

Application	2.0L SOHC	2.0L DOHC	2.2L DOHC
Gear Type	Power Rack and Pinion	Power Rack and Pinion	Power Rack and Pinion
Wheel Alignment:	-	-	-
Front:	-	-	-
Toe-In at Each wheel (°/mm)	-0.1 ± 0.08 (-0.6 ± 0.5)	-0.1 ± 0.08 (-0.6 ± 0.5)	-0.1 ± 0.08 (-0.6 ± 0.5)
Caster (°)	3 ± 1	3 ± 1	3 ± 1
Camber (°)	-0.2 ± 1	-0.2 ± 1	-0.2 ± 1
Rear:	-	-	-
Toe-In at Each wheel (°/mm)	0.16 ± 0.08 (1 ± 0.5)	0.16 ± 0.08 (1 ± 0.5)	0.16 ± 0.08 (1 ± 0.5)
Camber (°)	-0.8 ± 1	-0.8 ± 1	-0.8 ± 1
Oil Capacity (L)	1.0	1.0	1.0

Suspension

Application	2.0L SOHC	2.0L DOHC	2.2L DOHC
Front Type	MacPherson Strut	MacPherson Strut	MacPherson Strut
Rear Type	Dual Link Strut	Dual Link Strut	Dual Link Strut

Fuel System

Application	2.0L SOHC	2.0L DOHC	2.2L DOHC
Fuel Delivery	MPI	MPI	MPI
Fuel Pump Type	Electric Motor Pump	Electric Motor Pump	Electric Motor Pump
Fuel Filter Type	Cartridge	Cartridge	Cartridge
Fuel Capacity (L)	65	65	65

Lubricating System

Application	2.0L SOHC	2.0L DOHC	2.2L DOHC
Lubricating Type	Forced Feed	Forced Feed	Forced Feed
Oil Pump Type	Duocentric Rotor	Duocentric Rotor	Duocentric Rotor
Oil Filter Type	Cartridge (Full Flow)	Cartridge (Full Flow)	Cartridge (Full Flow)
Oil Pan Capacity Including Oil Filter (L)	4.0	4.0	4.0

Cooling System

Application	2.0L SOHC	2.0L DOHC	2.2L DOHC
Cooling Type	Forced Water Circulation	Forced Water Circulation	Forced Water Circulation
Radiator Type	Cross-flow	Cross-flow	Cross-flow
Water Pump Type	Centrifugal	Centrifugal	Centrifugal
Thermostat Type	Pellet Type	Pellet Type	Pellet Type
Coolant Capacity (L)	7.0	7.0	7.0

Electric System

Application	2.0L SOHC	2.0L DOHC	2.2L DOHC
Battery (Amps)	550 Cold Cranking 610 Cold Cranking	550 Cold Cranking 610 Cold Cranking	550 Cold Cranking 610 Cold Cranking
Alternator (Amps)	95	95	95
Starter (No-Load Test Current Draw):	-	-	-
1.4 kW (Amps/Volts)	Minimum 80 Maximum 120 (at 10)	Minimum 80 Maximum 120 (at 10)	Minimum 80 Maximum 120 (at 10)

VEHICLE DIMENSIONS AND WEIGHTS

Vehicle Dimensions - Manual and Automatic

Application	2.0L SOHC	2.0L DOHC	2.2L DOHC
Overall Length (mm)	4,671	4,671	4,671
Overall Width (mm)	1,779	1,779	1,779
Overall Height (mm)	1,437	1,437	1,437
Minimum Ground Clearance (mm)	167	167	167
Wheel Base (mm)	2,670	2,670	2,670
Tread:	-	-	-
Front (mm)	1,515	1,515	1,515
Rear (mm)	1,507	1,507	1,507

Vehicle Weights - 4 Door Notchback

Application	2.0L SOHC	2.0L DOHC	2.2L DOHC
Manual:	-	-	-
Curb Weight (kg)	1,295 - 1,320	1,325 - 1,365	TBD
Gross Vehicle Weight (kg)	1,830	1,830	TBD
Automatic:	-	-	-
Curb Weight: (kg)	1,305 - 1,330	1,336 - 1,376	TBD
Gross Vehicle Weight (kg)	1,830	1,830	TBD
Passenger Capacity	5	5	TBD

STANDARD BOLT SPECIFICATIONS

Bolt*	4T - Low Carbon Steel	7T - High Carbon Steel	7T - Alloy Steel
M6 X 1.0	4.1-8.1 N•m (36-72 lb•in)	4.1-9.5 N•m (48-84 lb•in)	-
M8 X 1.25	8.1-17.6 N•m (72-156 lb•in)	12.2-23.0 N•m (108-204 lb•in)	16-30 N•m (12-22 lb•ft)
M10 X 1.25	20-34 N•m (15-25 lb•ft)	27-46 N•m (20-34 lb•ft)	37-62 N•m (27-46 lb•ft)
M10 X 1.5	19-34 N•m (14-25 lb•ft)	27-45 N•m (20-33 lb•ft)	37-60 N•m (27-44 lb•ft)
M12 X 1.25	49-73 N•m (36-54 lb•ft)	61-91 N•m (45-67 lb•ft)	76-114 N•m (56-84 lb•ft)
M12 X 1.75	45-69 N•m (33-51 lb•ft)	57-84 N•m (42-62 lb•ft)	72-107 N•m (53-79 lb•ft)
M14 X 1.5	76-115 N•m (56-85 lb•ft)	94-140 N•m (69-103 lb•ft)	114-171 N•m (84-126 lb•ft)
M14 X 2.0	72-107 N•m (53-79 lb•ft)	88-132 N•m (65-97 lb•ft)	107-160 N•m (79-118 lb•ft)
M16 X 1.5	104-157 N•m (77-116 lb•ft)	136-203 N•m (100-150 lb•ft)	160-240 N•m (118-177 lb•ft)
M16 X 2.0	100-149 N•m (74-110 lb•ft)	129-194 N•m (95-143 lb•ft)	153-229 N•m (113-169 lb•ft)
M18 X 1.5	151-225 N•m (111-166 lb•ft)	195-293 N•m (144-216 lb•ft)	229-346 N•m (169-255 lb•ft)
M20 X 1.5	206-311 N•m (152-229 lb•ft)	270-405 N•m (199-299 lb•ft)	317-476 N•m (234-351 lb•ft)
M22 X 1.5	251-414 N•m (185-305 lb•ft)	363-544 N•m (268-401 lb•ft)	424-636 N•m (313-469 lb•ft)
M24 X 2.0	359-540 N•m (265-398 lb•ft)	431-710 N•m (318-524 lb•ft)	555-831 N•m (409-613 lb•ft)

* Diameter X pitch in millimeters

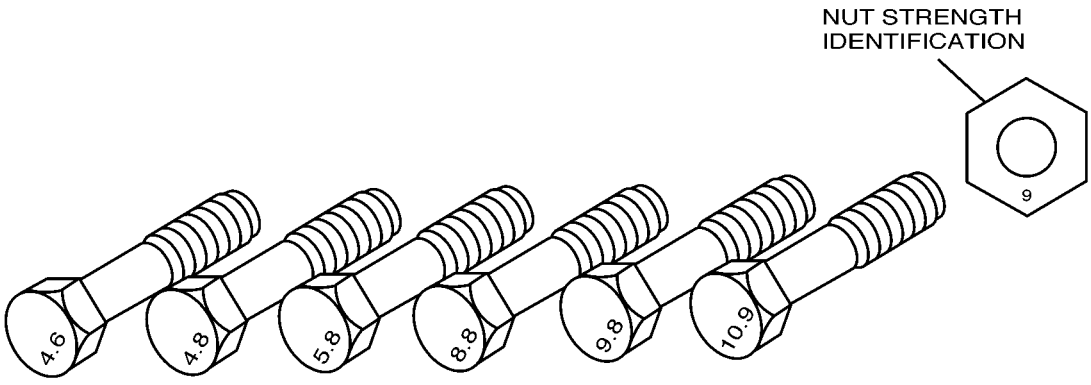

METRIC BOLTS - IDENTIFICATION CLASS NUMBERS CORRESPOND TO BOLT STRENGTH - INCREASING NUMBERS REPRESENT INCREASING STRENGTH.

A1010010

MAINTENANCE AND REPAIR

MAINTENANCE AND LUBRICATION

NORMAL VEHICLE USE

The maintenance instructions contained in the maintenance schedule are based on the assumption that the vehicle will be used for the following reasons:

- To carry passengers and cargo within the limitation indicated on the Tire Placard located on the edge of the driver's door.
- To be driven on reasonable road surfaces and within legal operating limits.

EXPLANATION OF SCHEDULED MAINTENANCE SERVICES

The services listed in the maintenance schedule are further explained below. When the following maintenance services are performed, make sure all the parts are replaced and all the necessary repairs are done before driving the vehicle. Always use the proper fluid and lubricants.

Drive Belt Inspection

When a separate belt drives the power steering pump, the air conditioning compressor and the generator, inspect it for cracks, fraying, wear, and proper tension. Adjust or replace the belt as needed.

Engine Oil and Oil Filter Change

Always use above the SJ grade engine oil. The SJ designation may be shown alone or in combination with other designations such as SJ/CC, etc.

Engine Oil Viscosity

Engine oil viscosity (thickness) has an effect on fuel economy and cold weather operation. Lower viscosity engine oils can provide better fuel economy and cold weather performance; however, higher temperature weather conditions require higher viscosity engine oils for satisfactory lubrication. Using oils of any viscosity other than those viscosities recommended could result in engine damage.

Cooling System Service

Drain, flush and refill the system with new coolant. Refer to „Recommended Fluids and Lubricants” in this section.

Fuel Micro-Filter Replacement

Replace the engine fuel filter every 45 000 km (27,000 miles).

The engine fuel filter is located on the center dash panel near the brake booster.

Air Cleaner Element Replacement

Replace the air cleaner element every 45 000 km (27,000 miles).

Replace the air cleaner more often under dusty conditions.

Throttle Body Mounting Bolt Torque

Check the torque of the throttle body mounting bolts.

Tighten the throttle body mounting nuts to 9 N•m (80 lbin) (DOHC), 15 N•m (11 lbft) (SOHC), if necessary.

Spark Plug Replacement

Replace spark plugs with the same type.

	SOHC	DOHC	
Maker	Bosch	Bosch	
Type	WR8DC	FR8LDC4	FLR8LDCU
Gap	0.9mm	0.8mm	1.0mm

Spark Plug Wire Replacement

Clean the wires and inspect them for burns, cracks, or other damage. Check the wire boot fit at the direct ignition system (DIS) module and at the spark plugs. Replace the wires as needed.

Brake System Service

Check the disc brake pads every 15,000 km or 12 months. Check the pad and the lining thickness carefully. If the pads or the linings are not expected to last another 15,000 km, replace the pads or the linings. Check the breather hole in the brake fluid reservoir cap to be sure it is free from dirt and the passage is open.

Transaxle Service

The manual transaxle oil does not require changing. The automatic transaxle fluid should be changed every 30,000 km for ZF 14HP and every 90,000 km for AISIN 50-40LE.

Tire and Wheel Inspection and Rotation

Check the tires for abnormal wear or damage. To equalize wear and obtain maximum tire life, rotate the tires. If irregular or premature wear exists, check the wheel alignment and check for damaged wheels. While the tires and wheels are removed, inspect the brakes. Refer to „Each Time The Oil Is Changed" in this section.

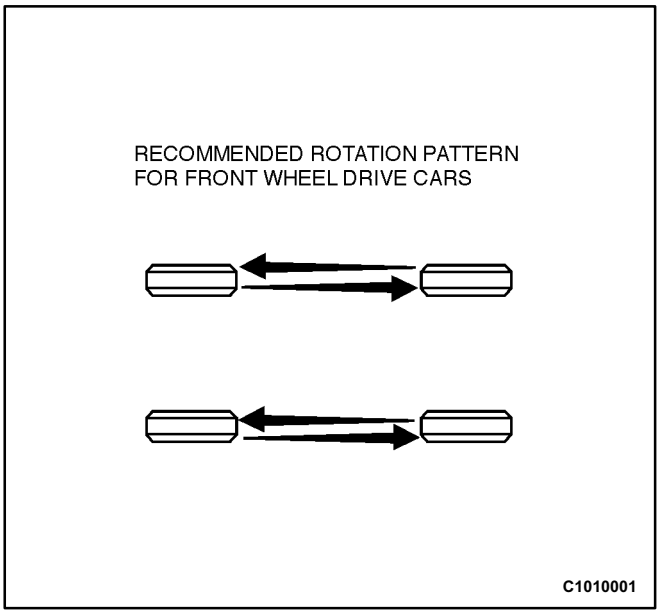

SCHEDULED MAINTENANCE CHARTS

Engine

Maintenance Item	Maintenance Interval								
	Kilometers (miles) or time in months, whichever comes first								
Kilometers x 1 000	1	15	30	45	60	75	90	105	120
Miles x 1 000	.6	9	18	27	36	45	54	63	72
Months	-	12	24	36	48	60	72	84	96
Drive belts (alternator, power steering)			I		I		I		I
DOHC			I		I		I		I
Engine oil and oil filter[1, 3]	I	R	R	R	R	R	R	R	R
Cooling system and hose connection		I	I	I	I	I	I	I	I
Engine coolant[3]	I	I	I	R	I	I	R	I	I
Fuel filter				R			R		
Fuel line and connections		I	I	I	I	I	I	I	I
Air cleaner element[2]		I	I	R	I	I	R	I	I
Ignition timing		I	I	I	I	I	I	I	I
Spark plugs			I		R		I		R
DIS Module			I		I		I		I
Charcoal canister and vapor lines				I			I		
PCV System			I		I		I		I
Timing belt (camshaft belt)					I		R		I
Air condition filter*	I	R	R	R	R	R	R	R	R

Chart Symbols:

I - Inspect, and if necessary correct, clean, replenish or adjust.

R - Replace or change:

[1] If the vehicle is operated under severe conditions: short distance driving, extensive idling or driving in dusty conditions, change the engine oil and the filter every 7 500 km (4,500 miles) or six months, whichever comes first.

[2] More frequently if driving in dusty conditions.

[3] Refer to „Recommended Fluids and Lubricants."

Chassis and Body

Maintenance Item	Maintenance Interval								
	Kilometers (miles) or time in months, whichever comes first								
Kilometers x 1 000	1	15	30	45	60	75	90	105	120
Miles x 1 000	6	9	18	27	36	48	54	63	72
Months	-	12	24	36	48	60	72	84	96
Brake and clutch fluid[1, 4]	I	I	R	I	R	I	R	I	R
Brake pads and discs[3]		I	I	I	I	I	I	I	I
Parking brake		I	I	I	I	I	I	I	I
Brake line and connections (including booster)		I	I	I	I	I	I	I	I
Rear hub bearing and clearance		I	I	I	I	I	I	I	I
Manual transaxle oil[1]		I	I	I	I	I	I	I	I
Clutch and brake pedal free play		I	I	I	I	I	I	I	I
Automatic transaxle fluid[1] (ZF 14HP)	I	I	R	I	R	I	R	I	R
Automatic transaxle fluid[1] (AISIN 50-40LE)	I	I	I	I	I	I	R	I	I
Tighten chassis and underbody bolts and nuts		I	I	I	I	I	I	I	I
Tire condition and inflation pressure	I	I	I	I	I	I	I	I	I
Wheel alignment[2]	Inspect when abnormal condition is noted								
Steering wheel and linkage		I	I	I	I	I	I	I	I
Power steering fluid and lines[1]	I	I	I	I	I	I	I	I	I
Drive shaft boots		I	I	I	I	I	I	I	I
Seat belts, buckles and anchors		I	I	I	I	I	I	I	I
Lubricate locks, hinges and hood latch		I	I	I	I	I	I	I	I

Chart Symbols:

I - Inspect, and if necessary correct, clean, replenish or adjust.

R - Replace or change:

[1] Refer to „Recommended Fluids And Lubricants."

[2] And if necessary, rotate and balance wheels.

[3] More frequently if operated under severe conditions: short distance driving, extensive idling, frequent low-speed operation in stop and go traffic, or driving in dusty conditions.

[4] Change the brake/clutch fluid every 15 000 km (9,000 miles) if the vehicle is mainly driven under severe conditions:
- driving in hilly or mountainous terrain, or
- towing a trailer/caravan frequently.

OWNER INSPECTIONS AND SERVICES

WHILE OPERATING THE VEHICLE

Horn Operation

Blow the horn occasionally to make sure it works. Check all the button locations.

Brake System Operation

Be alert for abnormal sounds, increased brake pedal travel, or repeated pulling to one side when braking. Also, if the brake warning light goes on or flashes, something may be wrong with part of the brake system.

Exhaust System Operation

Be alert to any changes in the sound of the system or the smell of the fumes. These are signs that the system may be leaking or overheating. Have the system inspected and repaired immediately.

Tires, Wheels and Alignment Operation

Be alert to any vibration of the steering wheel or the seats at normal highway speeds. This may mean a wheel needs to be balanced. Also, a pull right or left on a straight, level road may show the need for a tire pressure adjustment or a wheel alignment.

Steering System Operation

Be alert to changes in the steering action. An inspection is needed when the steering wheel is hard to turn or has too much free play, or if unusual sounds are noticed when turning or parking.

Headlamp Aim

Take note of the light pattern occasionally. Adjust the headlamps if the beams seem improperly aimed.

AT EACH FUEL FILL

A fluid loss in any (except windshield washer) system may indicate a problem. Have the system inspected and repaired immediately.

Engine Oil Level

Check the oil level and add oil if necessary. The best time to check the engine oil level is when the oil is warm.

1. After stopping the engine, wait a few minutes for the oil to drain back to the oil pan.
2. Pull out the oil level indicator (dipstick).
3. Wipe it clean, and push the oil level indicator back down all the way.
4. Pull out the oil level indicator and look at the oil level on it.
5. Add oil, if needed, to keep the oil level above the MIN line and within the area labeled „Operating Range." Avoid overfilling the engine, since this may cause engine damage.

6. Push the indicator all the way back down into the engine after taking the reading.

If you check the oil level when the oil is cold, do not run the engine first. The cold oil will not drain back to the pan fast enough to give a true oil level reading.

Engine Coolant Level and Condition

Check the coolant level in the coolant reservoir tank and add coolant if necessary. Inspect the coolant. Replace dirty or rusty coolant.

Windshield Washer Fluid Level

Check the washer fluid level in the reservoir. Add fluid if necessary.

AT LEAST MONTHLY

Tire and Wheel Inspection and Pressure Check

Check the tires for abnormal wear or damage. Also check for damaged wheels. Check the tire pressure when the tires are cold (check the spare also, unless it is a stowaway). Maintain the recommended pressures that are on the tire placard that is on the driver's door.

Lamp Operation

Check the operation of the license plate lamp, the headlamps (including the high beams), the parking lamps, the fog lamps, the taillamp, the brake lamps, the turn signals, the backup lamps, and the hazard warning flasher.

Fluid Leak Check

Periodically inspect the surface beneath the vehicle for water, oil, fuel or other fluids, after the vehicle has been parked for a while. Water dripping from the air conditioning system after use is normal. If you notice fuel leaks or fumes, find the cause and correct it at once.

AT LEAST TWICE A YEAR

Power Steering System Reservoir Level

Check the power steering fluid level. Keep the power steering fluid at the proper level. Refer to *Section 6A, Power Steering System*.

Brake Master Cylinder Reservoir Level

Check the fluid and keep it at the proper level. Refer to *Section 4B, Master Cylinder*. A low fluid level can indicate worn disc brake pads may need to be serviced. Check the breather hole in the reservoir cover to be free from dirt and check for an open passage.

Clutch Pedal Free Travel

Check clutch pedal free travel and adjust as necessary every 10 000 km. Measure the distance from the center of the clutch pedal to the outer edge of the steering wheel with the clutch pedal not depressed. Then measure the distance from the center of the clutch pedal to the outer edge of the steering wheel with the clutch pedal fully depressed. The difference between the two values must be greater than 140 mm.

Weatherstrip Lubrication

Apply a thin film of silicone grease using a clean cloth.

EACH TIME THE OIL IS CHANGED

Automatic Transaxle Fluid

Refer to *Section 5A, ZF 4HP14 Automatic Transaxle.*

Manual Transaxle

Check the oil level and add oil as required. Refer to *Section 5B, Five-Speed Manual Transaxle*.

Brake System Inspection

This inspection should be done when the wheels are removed for rotation. Inspect the lines and the hoses for proper hookup, binding, leaks, cracks, chafing, etc. Inspect the disc brake pads for wear. Inspect the rotors for surface condition. Inspect other brake parts, including the parking brake, etc., at the same time. Check the parking brake adjustment. Inspect the brakes more often if habit or conditions result in frequent braking.

Steering, Suspension and Front Drive Axle Boot and Seal Inspection

Inspect the front and rear suspension and the steering system for damaged, loose, or missing parts; signs of wear; or lack of lubrication. Inspect the power steering lines and the hoses for proper hookup, binding, leaks, cracks and chafing, etc. Clean and inspect the drive axle boot and seals for damage, tears, or leakage. Replace the seals if necessary.

Exhaust System Inspection

Inspect the complete system (including the catalytic converter, if equipped). Inspect the body near the exhaust system. Look for broken, damaged, missing, or outofposition parts, as well as open seams, holes, loose connections, or other conditions which could cause heat buildup in the floor pan or could let exhaust fumes seep into the trunk or passenger compartment.

Throttle Linkage Inspection

Inspect the throttle linkage for interference or binding, damaged, or missing parts. Lubricate all linkage joints and throttle cable joints, the intermediate throttle shaft bearing, the return spring at throttle valve assembly, and the accelerator pedal sliding face with suitable grease. Check the throttle cable for free movement.

Engine Drive Belts

Inspect all belts for cracks, fraying, wear, and proper tension. Adjust or replace the belts as needed.

Hood Latch Operation

When opening the hood, note the operation of the secondary latch. It should keep the hood from opening all the way when the primary latch is released. The hood must close firmly.

AT LEAST ANNUALLY

Lap and Shoulder Belt Condition and Operation

Inspect the belt system, including the webbing, the buckles, the latch plates, the retractor, the guide loops and the anchors.

Movable Head Restraint Operation

On vehicles with movable head restraints, the restraints must stay in the desired position.

Spare Tire and Jack Storage

Be alert to rattles in the rear of the vehicle. The spare tire, all the jacking equipment, and the tools must be securely stowed at all times. Oil the jack ratchet or the screw mechanism after each use.

Key Lock Service

Lubricate the key lock cylinder.

Body Lubrication Service

Lubricate all the body door hinges including the hood, the fuel door, the rear compartment hinges and the latches, the glove box and the console doors, and any folding seat hardware.

Transaxle Neutral Switch Operation on Automatic Transaxle

Caution: Take the following precautions because the vehicle could move without warning and possibly cause personal injury or property damage:

- ***Firmly apply the parking brake and the regular brakes.***
- ***Do not use the accelerator pedal.***
- ***Be ready to promptly turn off the ignition if the vehicle starts.***

On automatic transaxle vehicles, try to start the engine in each gear. The starter should crank only in P (PARK) and in N (NEUTRAL).

Parking Brake and Transaxle P (PARK) Mechanism Operation

Caution: In order to reduce the risk of personal injury or property damage, be prepared to apply the regular brakes promptly if the vehicle begins to move.

Park on a fairly steep hill with enough room for movement in the downhill direction. To check the parking brake, with the engine running and the transaxle in N (NEUTRAL), slowly remove foot pressure from the regular brake pedal (until only the parking brake is holding the vehicle).

To check the automatic transaxle P (PARK) mechanism's holding ability, release all brakes after shifting the transaxle to P (PARK).

Underbody Flushing

Flushing the underbody will remove any corrosive materials used for ice and snow removal and dust control. At least every spring, clean the underbody. First, loosen the sediment packed in closed areas of the vehicle. Then flush the underbody with plain water.

Engine Cooling System

Inspect the coolant and freeze protection fluid. If the fluid is dirty or rusty, drain, flush and refill the engine cooling system with new coolant. Keep the coolant at the proper mixture in order to ensure proper freeze protection, corrosion protection and engine operating temperature. Inspect the hoses. Replace the cracked, swollen, or deteriorated hoses. Tighten the clamps. Clean the outside of the radiator and the air conditioning condenser. Wash the filler cap and the neck. Pressure test the cooling system and the cap in order to help ensure proper operation.

RECOMMENDED FLUIDS AND LUBRICANTS

USAGE	CAPACITY	FLUID/LUBRICANT
Engine Oil	4.0L	SOHC - SAE 10W/30, API SJ DOHC - SAE 5W/30, API SJ
Engine Coolant	7.0L	Mixture of water and good quality silicate-base antifreeze (year-round coolant)
Brake and Clutch Fluid	0.5L	SSK221 (DOT-3 Fluid)
Power Steering System Fluid	1.0L	DEXRON® II or III
Automatic Transaxle Fluid (ZF 14HP)	2.5L (when overhaul 6.2L)	DEXRON® II, III or Mercon®M, see Recommanded Auto Transaxle Fluids
Automatic Transaxle Fluid (AISIN 50-40LE)	2.5L - 3.0L (when overhaul 6.5 - 7.0L)	TOTAL FLUID HX
Manual Transaxle Fluid	1.8L	CASTROL 80W
Manual Transaxle Shift Linkage	As needed	Grease (M-8122)
Key Lock Cylinders	As needed	Grease (M-8104)
Automatic Transaxle Shift Linkage	As needed	Grease
Clutch Linkage Pivot Points	As needed	Grease
Floor Shift Linkage Points	As needed	Grease
Hood Latch Assembly 1. Pivots and Spring Anchor	As needed	Grease (M-8105)
Hood and door hinges Fuel door hinge Rear compartment lid hinges	As needed	Spray Grease (M-8149) Oil (M-8030)
Weatherstrips	As needed	Wetting Agent (M-8128)

RECOMMENDED AUTOMATIC TRANSAXLE FLUIDS (ZF 14HP)

Manufacturer	Trade name
ADDINOL MINERALÖL GMBH, KRUMPA/D	ADDINOL ATF D III
AGIP PETROLI SPA, ROM/I	AGIP ATF II D
AGIP PETROLI SPA, ROM/I	AGIP DEXRON III
AGIP PETROLI SPA, ROM/I	AGIP ATF D 309
AGIP SCHMIERTECHNIK, WÜRZBURG/D	AUTOL GETRIEBEÖL ATF III D
AGIP SCHMIERTECHNIK, WÜRZBURG/D	AUTOL GETRIEBEÖL ATF-D
ARAL AG, BOCHUM/D	ARAL GETR ÖL ATF 55 F-30589
ARAL AG, BOCHUM/D	ARAL GETRIEBEÖL ATF 22
AVIA MINERALÖL-AG, MÜNCHEN/D	AVIA FLUID ATF 86
BLASER SWISSLUBE, HASLE-RÜEGSAU/CH	BLASOL 229
BP OIL DEUTSCHLAND, HAMBURG/D	FRONTOL UNIVERSAL-ATF 100
BP OIL INTERNATIONAL, LONDON/GB	AUTRAN MBX
BUCHER+CIE AG, LANGENTHAL/CH	MOTOREX ATF SUPER D-22656
BUCHER+CIE AG, LANGENTHAL/CH	MOTOREX ATF DEXRON III MC
C.J.DIEDERICHS SÖHNE, WUPPERTAL/D	CIDISOL-HYDR.-FLUID DEXRON II D
CALPAM GMBH, ASCHAFFENBURG/D	PAMATIC FLUID 289
CALPAM GMBH, ASCHAFFENBURG/D	CALPAMATIC FLUID III F
CALTEX PETROLEUM CORP., LONDON/GB	CALTEX ATF-HDA
CASTROL LTD. SWINDON/GB	CASTROL TQ-D (22765)
CASTROL LTD. SWINDON/GB	CASTROL TRANSMAX Z
CASTROL LTD. SWINDON/GB	CASTROL TQ-D (21289)
CASTROL LTD. SWINDON/GB	CASTROL ATF 21293
CASTROL LTD. SWINDON/GB	CASTROL TQ DEXRON III F-30520
CEPSA, MADRID/E	CEPSA ATF-70
DE OLIEBRON B.V., ZWIJNDRECHT/NL	ATF DMM
DE OLIEBRON B.V., ZWIJNDRECHT/NL	ATF 289
DEA MINERALÖL AG, HAMBURG/D	DEAFLUID 3003
DEA MINERALÖL AG, HAMBURG/D	DEAFLUID 4011
DEA MINERALÖL AG, HAMBURG/D	DEAMATIC
DEUTSCHE SHELL AG, HAMBURG/D	MAC ATF D-21666
DUCKHAMS OIL, BROMLEY/GB	UNIMATIC
ELF LUBRIFIANTS, PARIS/F	TRANSANTAR DF2
ELF LUBRIFIANTS, PARIS/F	ELFMATIC G3
ELF LUBRIFIANTS, PARIS/F	TRANSANTAR DF3
ELF LUBRIFIANTS, PARIS/F	ELFMATIC G2 22329
ELF LUBRIFIANTS, PARIS/F	HUILE RENAULT DIESEL STARMATIC
ELF LUBRIFIANTS, PARIS/F	ANTAR 22329
ELLER-MONTAN-COMP., DUISBURG/D	ELLMO-AUTOMATIK-FLUID 22233
ERTOIL SA, MADRID/E	TRANSMISSIONES AUTOMATICAS D2
ESSO AG, JAMBURG/D	ESSO ATF D (21065)
ESSO AG, JAMBURG/D	ESSO ATF D (21611)
ESSO AG, JAMBURG/D	ESSO ATF F-30320
FINA EUROPE SA, BRÜSSEL/B	FINAMATIC II-D
FUCHS LUBRICANTS (UK), DERBY/GB	SILKTRAN MP-ATF
FUCHS MINERALÖL WERKE, MANNHEIM/D	TITAN ATF 4000
GINOUVES GEORGES SA, LA FARLEDE/F	YORK LT 785
GULF OIL (GB) LTD, CHELTENHAM/GB	ATF 2
HANDEL-MIJNOVIOL B.V., NIJMEGEN/NL	KENDALL ATF DEXRON II D
HOMBERG GMBH+CO KG, WUPPERTAL/D	HOMBERG-GETRIEBE-FLUID D
IGOL FRANCE, PARIS/F	IGOL ATF 420
INA D.D. RAFINERIJA ZAGREB/YU	INA-ATF SUPER
ITALIANA PETROLI, GENOVA/I	TRANSMISSION FLUID DX
KÄPPLER K., STUTTGART/D	SELECTOL FLUID GETR. ÖL II D 23
KLÖCKNER ENERGIEHANDEL GMBH, KÖLN/D	DEUTZ OEL ATF-D
KROON OIL BV, ALMELO/NL	ATF DEXRON II D
KROON OIL BV, ALMELO/NL	ALMIROL ATF
KUWAIT PETROLEUM, HOOGVLIET/NL	Q8 AUTO 15
KUWAIT PETROLEUM, HOOGVLIET/NL	Q8 AUTO 14 (II D-21883)
KUWAIT PETROLEUM, HOOGVLIET/NL	Q8 AUTO 14 (II D-21677)
LEPRINCE+SIVEKE GMBH, HERFORD/D	LEPRINXOL FLUID CN
LIQUIMOLY / MEGUIN, ULM/D	MEGOL ATF II D
MAURAN SA, ODARS/F	INTER OIL INTER MATIC ATF D2
MIN.ÖL-RAFFIN, DOLLBERGEN, UETZE/D	PENNASOL FLUID-GETR. ÖL TYP PCN
MOBIL OIL, WEDEL/D	MOBIL ATF 220 D21412 / D22187
MOBIL OIL, WEDEL/D	MOBIL ATF 220 D20104 / D21685
MOL HUNGARIAN OIL, KOMARON/H	CARRIER ATF
MORRIS LUBRICANTS, SHREWSBURY/GB	LIQUIMATIC D II
NAFTEC, ALGIER/DZ	TASSILIA
NANHAI SUPERIOR LUB-OIL, CHINA	NANHAI ATF (D2)
NIS-RAFINERIJA NAFTE BEOGRAD/YU	GALAX MATIC DAC
OEST G. MIN. ÖLWERK, FREUDENSTADT/D	ATF T 4011
OMV AG, SCHWECHAT/A	OMV ATF D II (D22427)
OMV AG, SCHWECHAT/A	OMV ATF III (F-30580)
OPTIMOL ÖLWERKE, HAMBURG/D	OPTIMOL ATF T 4011
OSWALD KLUTH, BARGFELD-STEGEN/D	UNIVERSAL ATF-D
PAKELO MOTOR OIL, SAN BONIFACIO/I	MULTIPURPOSE TRANSM. FLUID II D
PANOLIN AG, MADETSWIL/CH	PANOLIN ATF MULTI 21996
PRINZ-SCHULTE, FRECHEN/D	AERO-LINE ATF-D
PRINZ-SCHULTE, FRECHEN/D	AERO-LINE ATF-2
REPSOL DISTRUBCION SA, MADRID/E	REPSOL MATIC ATF
S.A.E.L, ALCOBENDAS/E	GULF ATF D II D-22233
SCHMIERSTOFFRAFFINERIE SALZBERGEN/D	WINTERSHALL ATF D
SHELL ASEOL AG, BERN/CH	ASEOL ATF DB UNIVERSAL
SHELL INTERNATIONAL, LONDON/GB	SHELL DONAX TA (D-21666)
SLOVNAFT JS CO, BRATISLAVA/SLO	MADIT AUTOMATIC
SONOL ISRAEL LTD, HAIFA/IL	DEXRON 2 D
SOPROGRASA SA, MADRID/E	SOPRAL 164
STL TECNOL ESCALQUENS/F	TECNOL TECMATIC D2
SUN OIL COMPANY, AARTSELAAR/B	SUNAMATIC 149
SUN OIL COMPANY, AARTSELAAR/B	SUNAMATIC 153
SVENSKA STATOIL AB, NYNÄSHAMM/S	TRANSWAY DX III (F-30373)
TAMOIL LUBES, GENEVA/CH	TAMOIL ATF II D
TEXACO LUBRICANTS COMP., BEACON/USA	ATF MERCON / DEXRON III
TEXACO SERVICES LTD, BRÜSSEL/B	TEXAMATIC 9226
TEXACO SERVICES LTD, BRÜSSEL/B	TEXAMATIC 4291
TEXACO SERVICES LTD, BRÜSSEL/B	TEXAMATIC 4011
TEXACO SERVICES LTD, BRÜSSEL/B	TEXAMATIC 4261
TEXACO SERVICES LTD, BRÜSSEL/B	TEXAMATIC 7080
TOTAL RAFFINAGE DISTR., PARIS/F	TOTAL FLUIDE AT 42
TOTAL RAFFINAGE DISTR., PARIS/F	TOTAL FLUIDE II D
TOTAL RAFFINAGE DISTR., PARIS/F	TOTAL FLUIDE ATX
TOTAL SOUTH AFRICA, JOHANNESBURG/ZA	TOTAL FLUIDE ATD
TURBOTANK BÖSCHE+BÖDEKER, BREMEN/D	TURBO UNIV. ATF MERCON 4011
UFANEFTECHIM REFINERY, UFA/RUS	UFALUB ATF
UNIL DEUTSCHLAND GMBH, BREMEN/D	UNIL MATIC CN T 4011
VOLVOLINE INC., LEXINGTON/USA	VALVOLINE MULTI-PURPOSE ATF
VALVOLINE INTERNAT., DORDRECHT/NL	VALVOLINE ATF TYPE D
VEBA OEL AG, GELSENKIRCHEN/D	MOVARA ATF-GETRIEBEÖL DIID
VEEDOL INTERNATIONAL, SWINDON/GB	VEEDOL ATF-M (22764)
VEEDOL INTERNATIONAL, SWINDON/GB	VEEDOL UNITRANS Z
VEEDOL INTERNATIONAL, SWINDON/GB	VEEDOL ATF DEXRON III F-30521
YACCO SA, PIERRE-LES-ELBEUF/F	YACCO ATF D
ZELLER+GMELIN GMBH & CO, EISLINGEN/D	DIVINOL FLUID 666
ZF FRIEDRICHSHAFEN AG/D	ZF ECOFLUID □A□

GENERAL DESCRIPTION AND SYSTEM OPERATION

GENERAL REPAIR INSTRUCTIONS

If a floor jack is used, the following precautions are recommended:

- Park the vehicle on level ground, „block” the front or rear wheels, set the jack against the frame, raise the vehicle and support it with chassis stands, and then perform the service operation.
- Before performing the service operation, disconnect the negative battery cable in order to reduce the chance of cable damage and burning due to shortcircuiting.
- Use a cover on the body, the seats and the floor to protect them against damage and contamination.
- Handle brake fluid and antifreeze solution with care as they can cause paint damage.
- The use of proper tools, and the required special tools where specified, are important for efficient and reliable performance of the service repairs.
- Use genuine DAEWOO parts.
- Discard used cotter pins, gaskets, Orings, oil seals, lock washers and selflocking nuts. Prepare new ones for installation. Normal functioning of the vehicle's components cannot be maintained if these fasteners and seals are reused.
- Keep the disassembled parts in order to assist in reassembly.
- Keep attaching bolts and nuts separated, as they vary in hardness and design depending on the position of the installation.
- Clean the parts before inspection or reassembly.
- Also clean the oil parts, etc. Use compressed air to make certain they are free of restrictions.
- Lubricate rotating and sliding faces of parts with oil or grease before installation.
- When necessary, use a sealer on gaskets to prevent leakage.
- Carefully observe all specifications for bolt and nut torques.

When service operation is complete, make a final check to be sure service was done properly and the problem was corrected.

GENERAL DESCRIPTION

VEHICLE IDENTIFICATIONS

The vehicle identification number (VIN) plate is attached to the top right side of the front panel support. The VIN is also engraved in the top right side of the bulkhead.

Passenger Car VIN

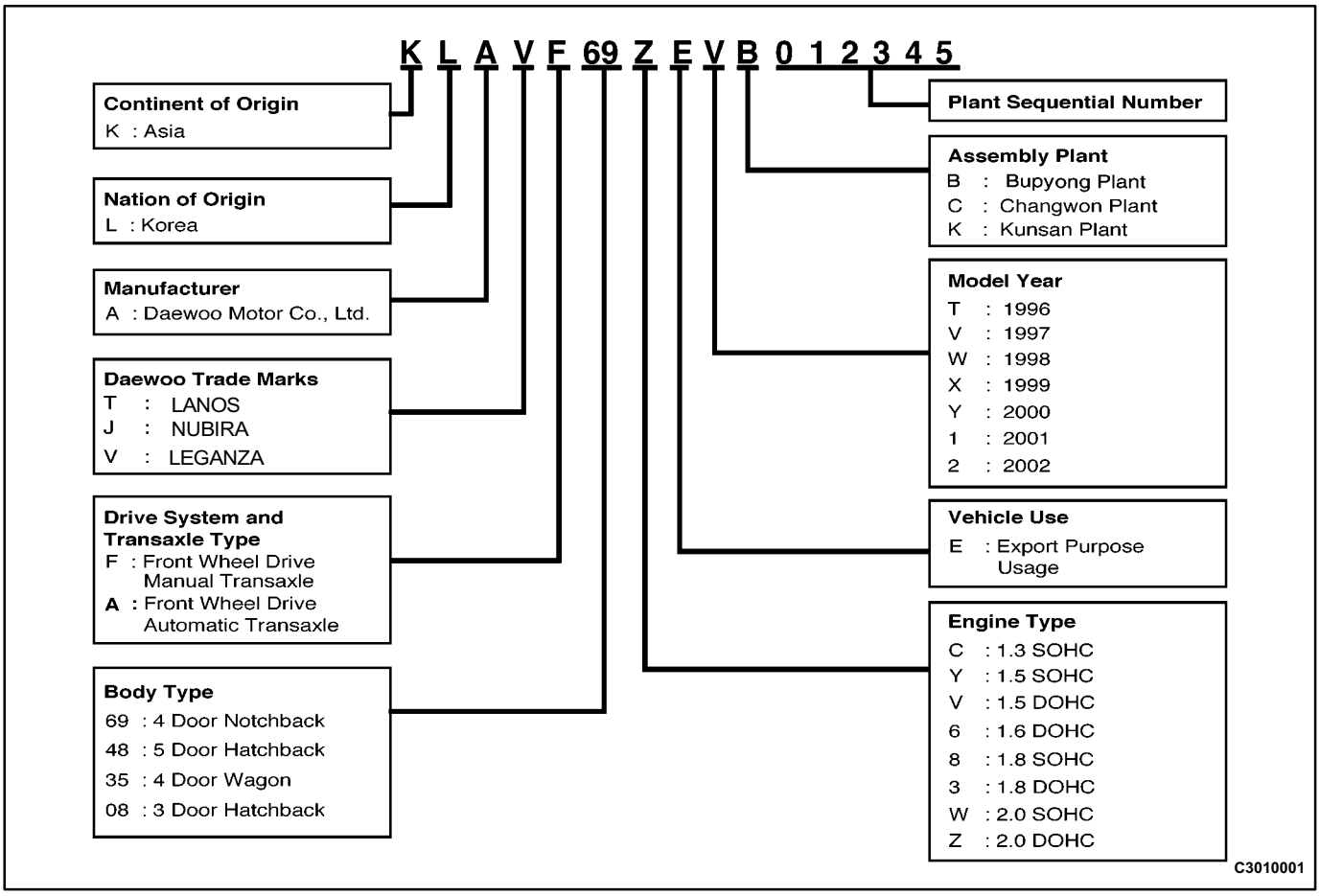

VIN Plate

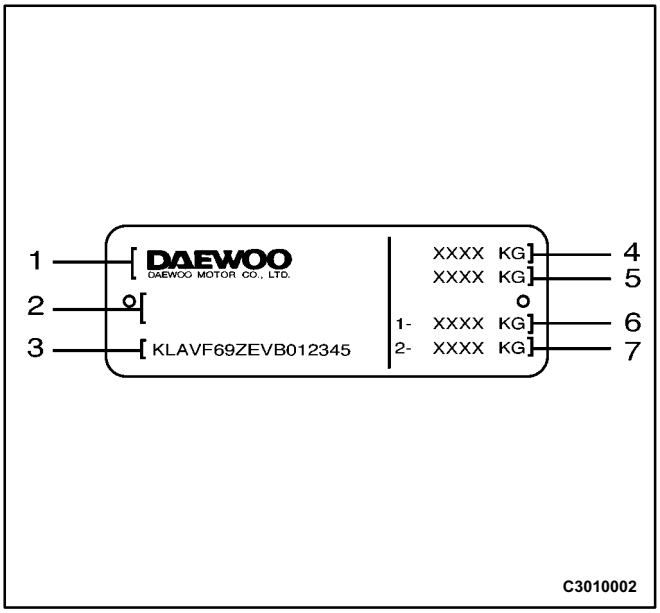

1 Manufacturer's Name
2 NTA Number or WVTA Number
3 Vehicle Identification Number
4 Gross Vehicle Weight
5 Combination Weight
6 Front Axle Weight
7 Rear Axle Weight

VIN Plate Location

The VIN plate is attached to the top right side of the front panel support.

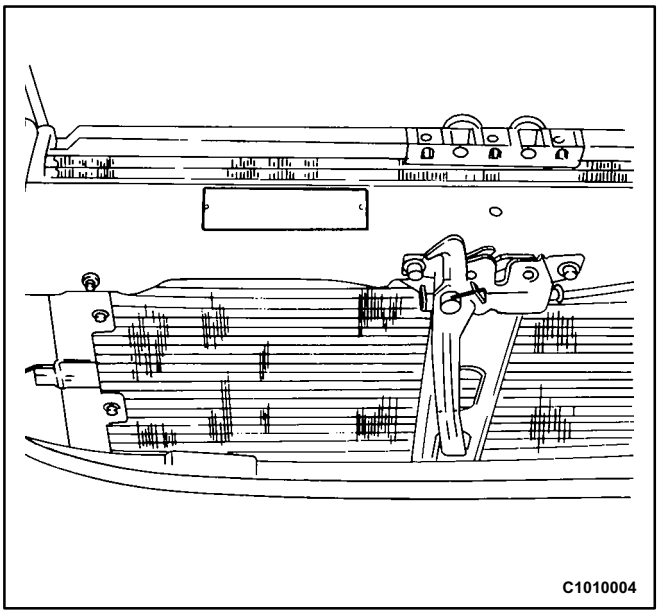

Engraved VIN Location

The engraved VIN is located on the top right side of the bulkhead.

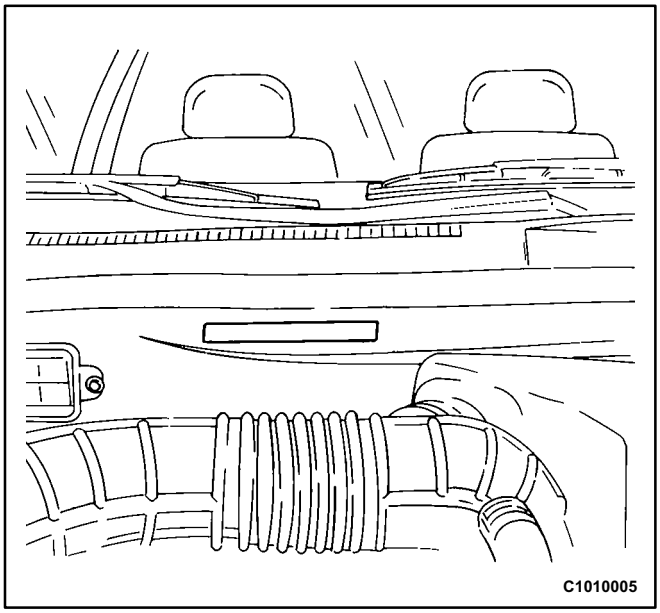

Engine Number

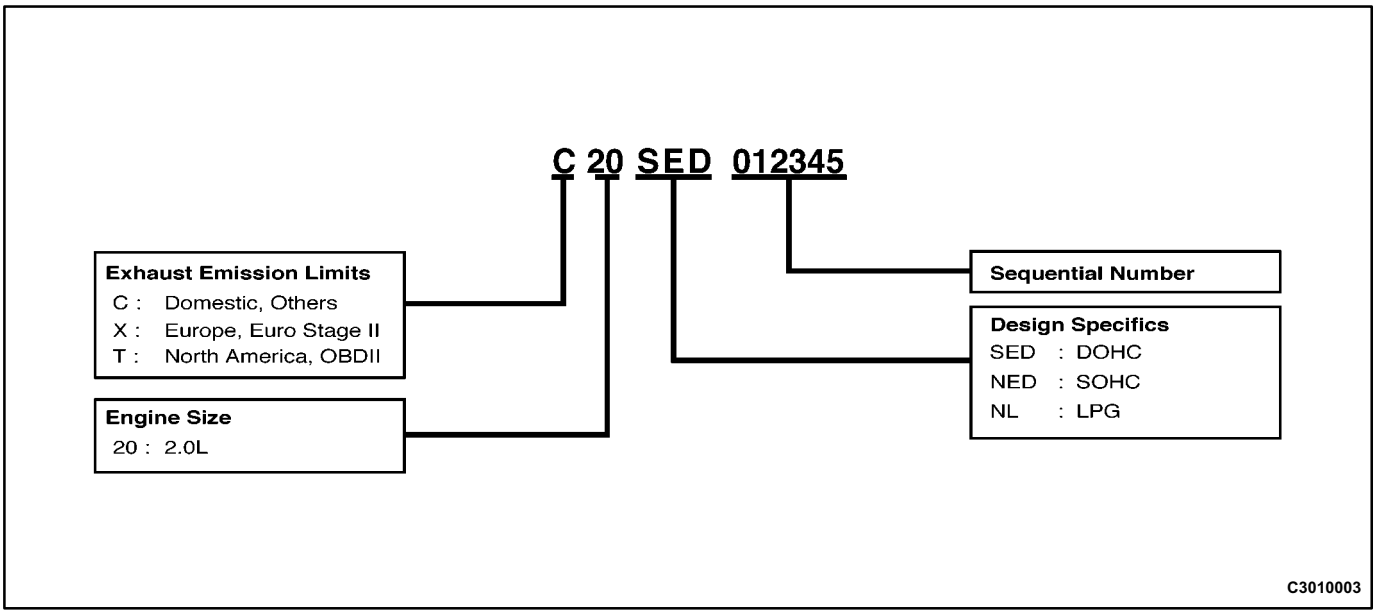

Engraved Engine Number Location

The engraved engine number is located on the engine block beneath the No. 4 exhaust manifold.

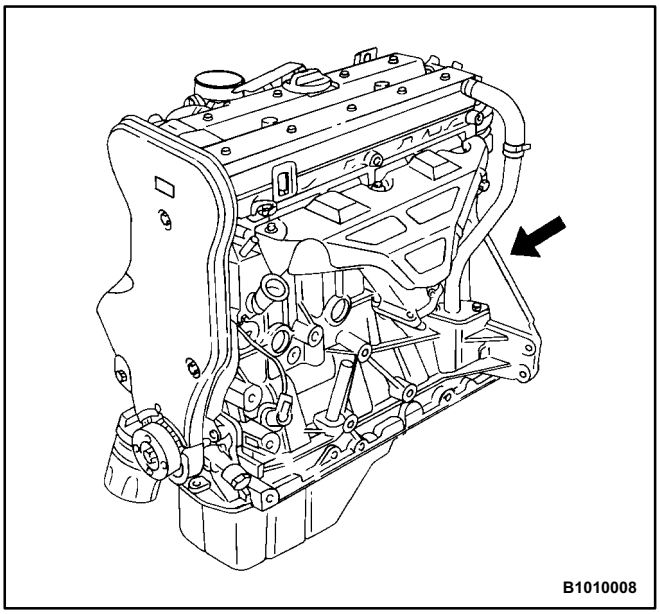

Body Identification Number Plate Location

The body identification number plate is attached to the top left side of the front panel support.

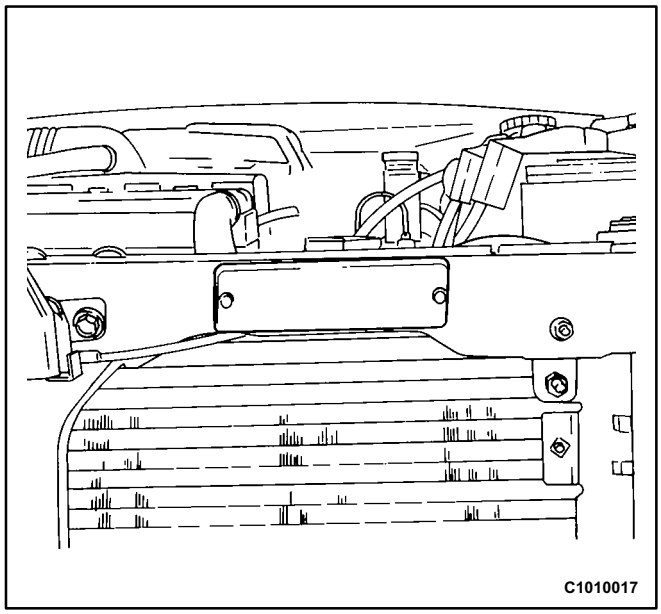

Body Identification Number Plate

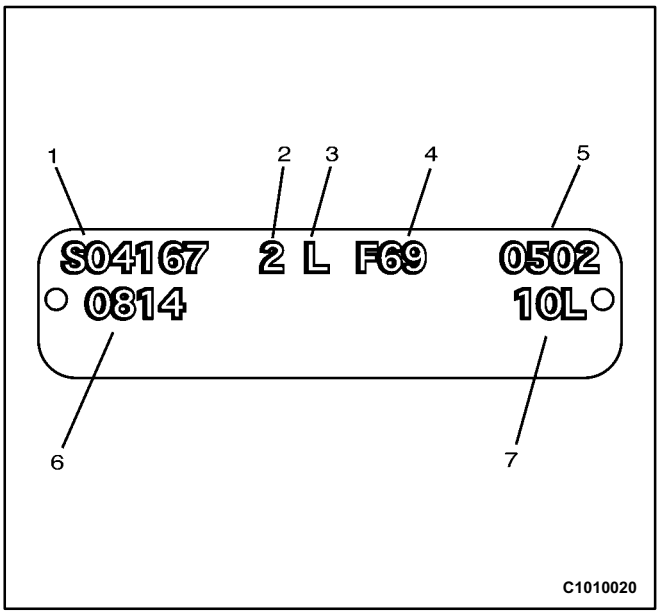

1 P/O Number
2 Check Digit
3 Drive
4 Body Type
5 P/O Date
6 Sequential Number
7 Exterior Color

Manual Transaxle Identification Number Plate

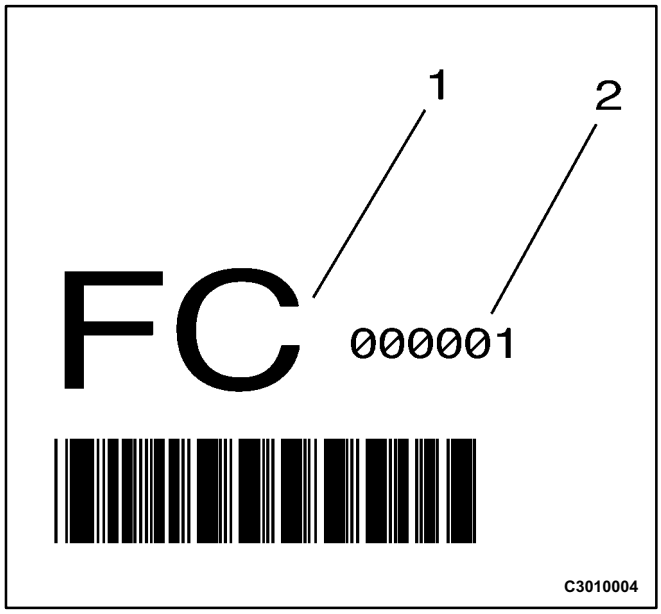

1 Identification Code
2 Sequential Number

Identification Code	Engine	Gear Ratio
MF	2.0L SOHC	3.944 M/R
FC	2.0L DOHC	3.722 CR

Manual Transaxle Identification Number Plate Location

The manual transaxle identification number plate is attached to the top of the transaxle case near the engine.

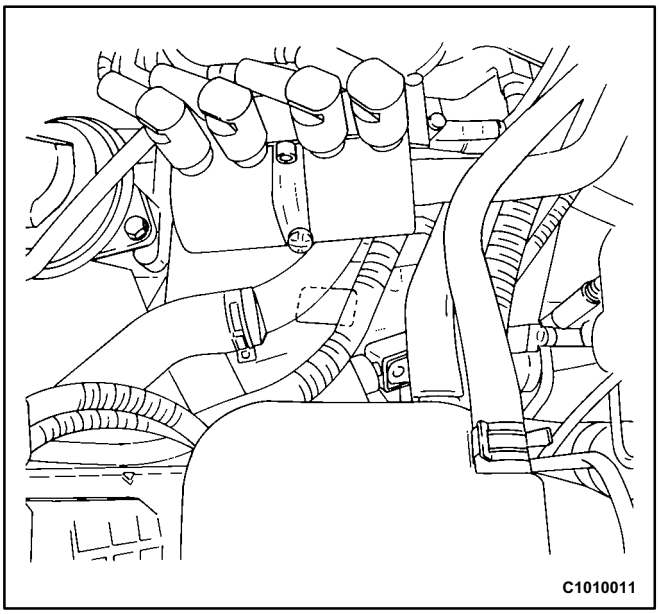

Automatic Transaxle Identification Number Plate (ZF 14 HP)

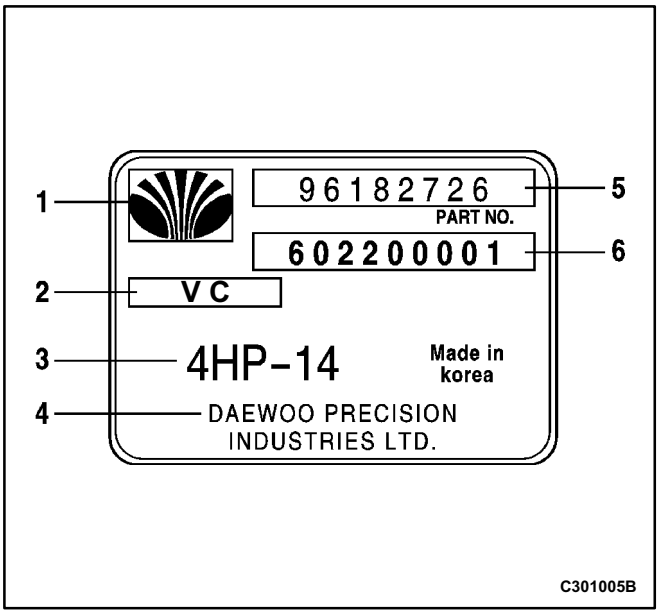

1 Manufacturer's Logo
2 Identification Code
3 Model Name (4HP14)
4 Manufacturer
5 Part Number
6 Sequential Number

Identification Code	Engine
VB	2.0L SOHC
VC	2.0L DOHC

Automatic Transaxle Identification Number Plate Location (ZF 14 HP)

The automatic transaxle identification number plate is attached on the rear bottom side of the transaxle case near the bulkhead.

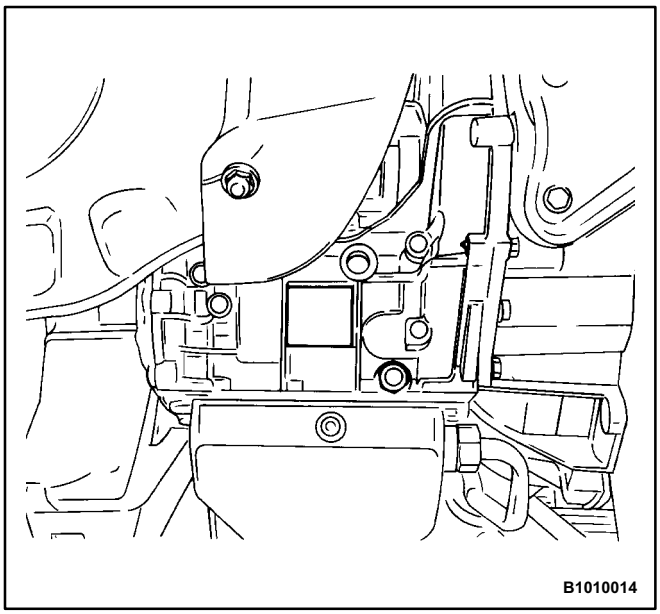

Automatic Transaxle Identification Number Plate (AISIN 50-40LE)

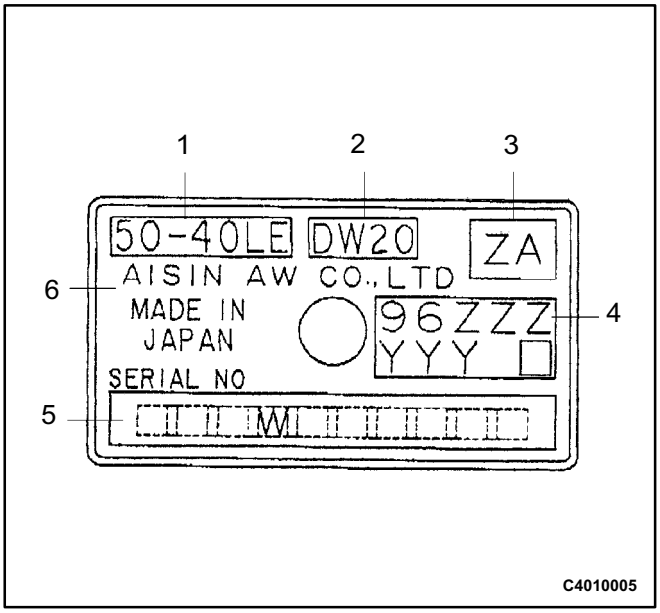

1 Model Number
2 DWMC Model Number
3 ID Code
4 DWMC Part Number
5 T/M Serial Number
6 Manufacturer

Identification Code	Engine
ZA	2.2 DOHC

Automatic Transaxle Identification Number Plate Location

The automatic transaxle identification number plate is attached on the rear bottom side of the transaxle case near the bulkhead.

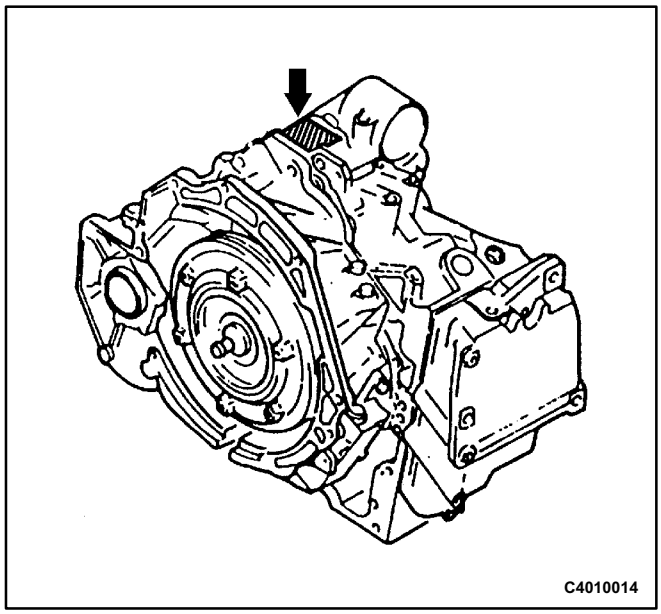

VEHICLE LIFTING PROCEDURES

Notice: To raise the vehicle, place the lifting equipment only at the points indicated. Failure to use these precise positions may result in permanent body deformation. Many dealer service facilities and service stations are equipped with automotive hoists that bear upon some parts of the frame in order to lift the vehicle. If any other hoist method is used, use special care to avoid damaging the fuel tank, the filler neck, the exhaust system, or the underbody.

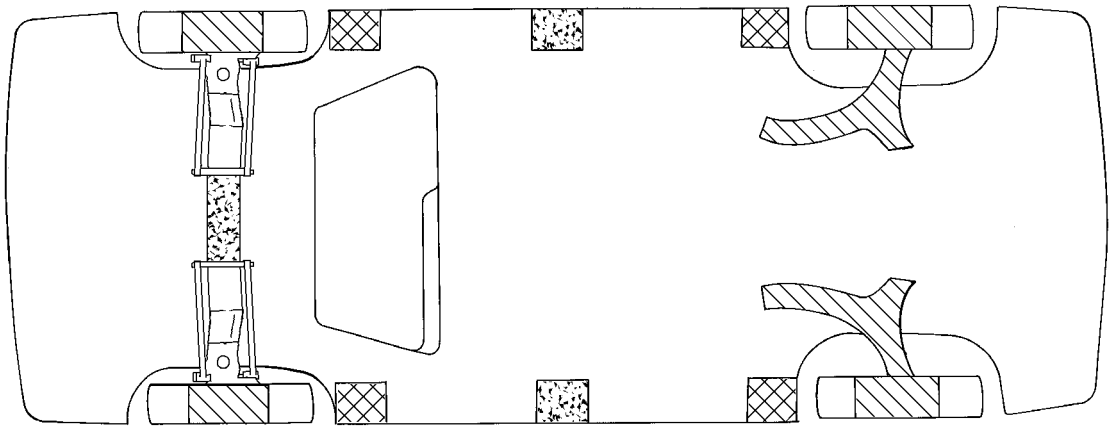

FRAME CONTACT HOIST SUSPENSION CONTACT HOIST FLOOR JACK

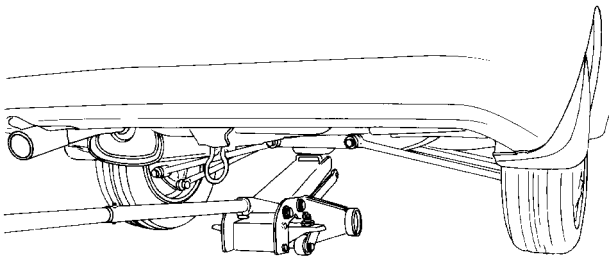

REAR SUSPENSION
AXLE LIFT POINT

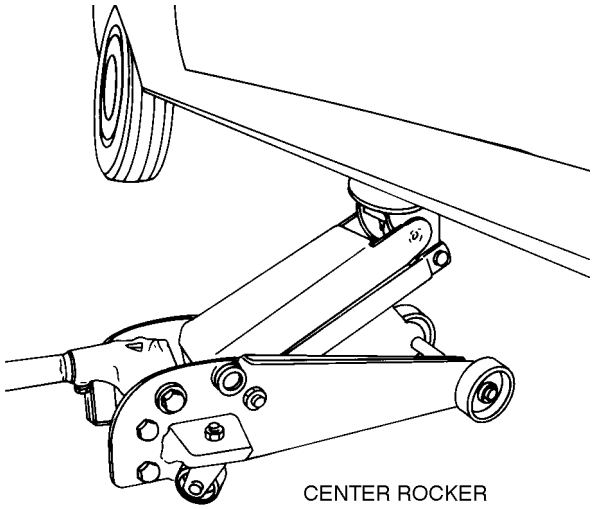

CENTER ROCKER
LIFT POINT (LH/RH)

B1010017

Vehicle Lifting Points

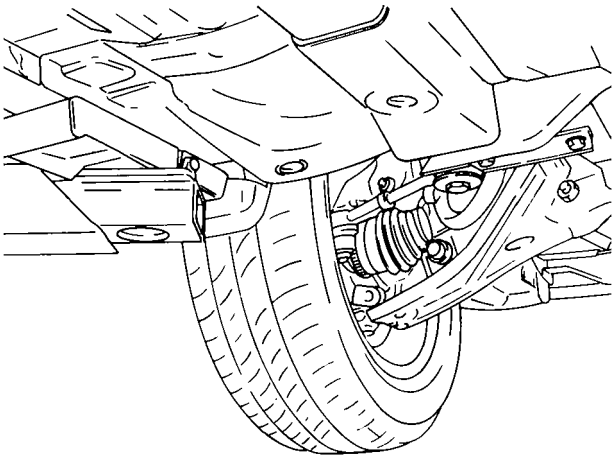

FRAME CONTACT HOIST
REARWARD OF FRONT TIRE

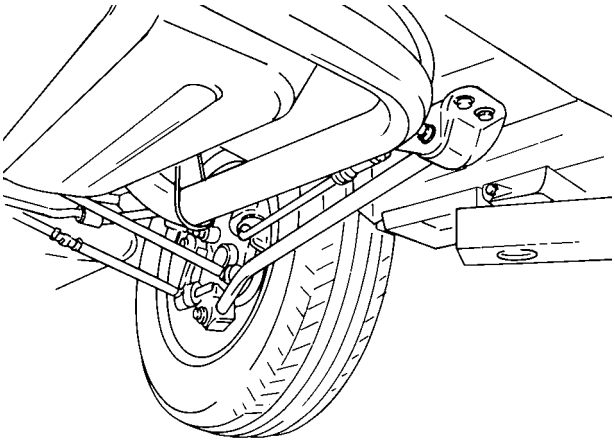

FRAME CONTACT HOIST
FORWARD OF REAR WHEEL

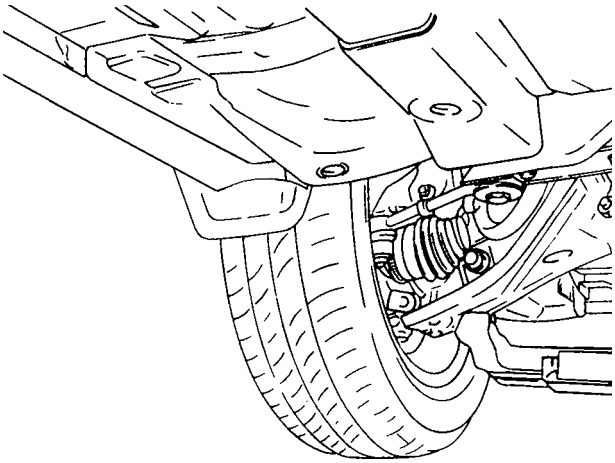

SUSPENSION CONTACT HOIST
UNDER FRONT LOWER CONTROL ARM

C1010014

ENGINE

CONTENTS

SECTION 1A GENERAL ENGINE INFORMATION

SECTION 1B SOHC ENGINE MECHANICAL

SECTION 1C DOHC ENGINE MECHANICAL

SECTION 1D ENGINE COOLING

SECTION 1E ENGINE ELECTRICAL

SECTION 1F ENGINE CONTROLS

SECTION 1G ENGINE EXHAUST

SECTION 1

ENGINE

SECTION 1A

GENERAL ENGINE INFORMATION

TABLE OF CONTENTS

Diagnosis 1A-1
Compression Test 1A-1
Oil Pressure Test 1A-2
Oil Leak Diagnosis 1A-3
Knock Diagnosis 1A-4
Noise Diagnosis 1A-8
General Information 1A-11
Cleanliness and Care 1A-11
OnEngine Service 1A-11

DIAGNOSIS

COMPRESSION TEST

Important: Disconnect the Crankshaft Position Sensor (CPS) connector to disable the fuel and the ignition systems.

Test the compression pressure for each cylinder. Low compression pressure may be the fault of the valves or the pistons. The following conditions should be considered when you check the cylinder compression:

- The engine should be at normal operating temperature.
- The throttle must be wide open.
- All the spark plugs should be removed.
- The battery must be at or near full charge.

1. Place approximately three squirts of oil from a plunger type oiler into each spark plug port.
2. Insert the engine compression gauge into each spark plug port.
3. Crank test each cylinder with four to five compression strokes using the starter motor.
4. The lowest reading should not be less than 70% of the highest reading. The compression gauge reading should not be less than 689 kPa (100 psi) for any of the cylinders.
5. Examine the gauge readings obtained after the four ``puffs'' per cylinder are obtained from cranking the starter motor. The readings are explained in the following descriptions:

- Normal Condition - Compression builds up quickly and evenly to specified compression on each cylinder.
- Piston Rings Faulty - Compression is low on the first stroke and tends to build up on following strokes, but the compression pressure does not reach normal. The compression pressure improves considerably with the addition of oil into the cylinder.
- Valves Faulty - Low compression pressure on the first stroke. The compression pressure does not tend to build up on the following strokes. The compression pressure does not improve much with the addition of oil into the cylinder.

OIL PRESSURE TEST

Step	Action	Value(s)	Yes	No
1	Is low or no oil pressure indicated?	-	Go to *Step 2*	System OK
2	Check the oil level in the crankcase. Is the level low?	-	Go to *Step 3*	Go to *Step 4*
3	Add oil so that the oil level is up to the full mark on the indicator. Is the repair complete?	-	Go to *Step 1*	-
4	Check the idle speed. Is the idle speed below the value specified?	850 rpm	Go to *Step 5*	Go to *Step 6*
5	Increase the idle speed. Is the speed increased?	-	Go to *Step 1*	-
6	Inspect the oil pressure switch. Is the oil pressure switch incorrect or malfunctioning?	-	Go to *Step 7*	Go to *Step 8*
7	Install a new oil pressure switch. Is the repair complete?	-	Go to *Step 1*	-
8	Inspect the oil pressure gauge on the cluster. Is the oil pressure gauge incorrect or malfunctioning?	-	Go to *Step 9*	Go to *Step 10*
9	Install a new oil pressure gauge. Is the repair complete?	-	Go to *Step 1*	-
10	Inspect the engine oil. Is the engine oil in the crankcase diluted or of the improper viscosity?	-	Go to *Step 11*	Go to *Step 12*
11	Install new engine oil of the proper viscosity for the expected temperatures. Is the repair complete?	-	Go to *Step 1*	-
12	Inspect the oil pump. Is the pump worn or dirty?	-	Go to *Step 13*	Go to *Step 14*
13	Replace the oil pump. Is the repair complete?	-	Go to *Step 1*	-
14	Inspect the oil filter. Is the oil filter plugged?	-	Go to *Step 15*	Go to *Step 16*
15	Install a new oil filter. Is the repair complete?	-	Go to *Step 1*	-
16	Inspect the oil pickup screen. Is the oil pickup screen loose or plugged?	-	Go to *Step 17*	Go to *Step 18*
17	Tighten or replace the oil pickup screen as necessary. Is the repair complete?	-	Go to *Step 1*	-
18	Inspect the oil pickup tube. Are there any holes in the oil pickup tube?	-	Go to *Step 19*	Go to *Step 20*
19	Replace the oil pickup tube. Is the repair complete?	-	Go to *Step 1*	-

OIL PRESSURE TEST (Cont'd)

Step	Action	Value(s)	Yes	No
20	Inspect the bearing clearances. Are the bearing clearances more than the values specified?	Crankshaft 0.040 mm (0.0016 in.) Connecting Rod 0.063 mm (0.0025 in.)	Go to *Step 21*	Go to *Step 22*
21	Replace the bearing if necessary. Is the repair complete?	-	Go to *Step 1*	-
22	Inspect the oil galleries. Are the oil galleries cracked, porous or plugged?	-	Go to *Step 23*	Go to *Step 24*
23	Repair or replace the engine block. Is the repair complete?	-	Go to *Step 1*	-
24	Inspect the gallery plugs. Are any of the gallery plugs missing or not installed properly?	-	Go to *Step 25*	Go to *Step 26*
25	Install plugs or repair as necessary. Is the repair complete?	-	Go to *Step 1*	-
26	Inspect the camshaft. Is the camshaft worn or is there evidence of poor machining?	-	Go to *Step 27*	System OK
27	Replace the camshaft. Is the repair complete?	-	Go to *Step 1*	-

OIL LEAK DIAGNOSIS

Most fluid oil leaks are easily located and repaired by visually finding the leak and replacing or repairing the necessary parts. On some occasions a fluid leak may be difficult to locate or repair. The following procedures may help you in locating and repairing most leaks.

Finding the Leak

1. Identify the fluid. Determine whether it is engine oil, automatic transmission fluid, power steering fluid, etc.
2. Identify where the fluid is leaking from.
   - 2.1. After running the vehicle at normal operating temperature, park the vehicle over a large sheet of paper.
   - 2.2. Wait a few minutes.
   - 2.3. You should be able to find the approximate location of the leak by the drippings on the paper.
3. Visually check around the suspected component. Check around all the gasket mating surfaces for leaks. A mirror is useful for finding leaks in areas that are hard to reach.
4. If the leak still cannot be found, it may be necessary to clean the suspected area with a degreaser, steam or spray solvent.
   - 4.1. Clean the area well.
   - 4.2. Dry the area.
   - 4.3. Operate the vehicle for several miles at normal operating temperature and varying speeds.
   - 4.4. After operating the vehicle, visually check the suspected component.
   - 4.5. If you still cannot locate the leak, try using the powder or black light and dye method.

Powder Method

1. Clean the suspected area.
2. Apply an aerosoltype powder (such as foot powder) to the suspected area.
3. Operate the vehicle under normal operating conditions.
4. Visually inspect the suspected component. You should be able to trace the leak path over the white powder surface to the source.

Black Light and Dye Method

A dye and light kit is available for finding leaks. Refer to the manufacturer's directions when using the kit.

1. Pour the specified amount of dye into the engine oil fill tube.
2. Operate the vehicle under normal operating conditions as directed in the kit.
3. Direct the light toward the suspected area. The dyed fluid will appear as a yellow path leading to the source.

Repairing the Leak

Once the origin of the leak has been pinpointed and traced back to its source, the cause of the leak must be determined in order for it to be repaired properly. If a gasket is replaced, but the sealing flange is bent, the

new gasket will not repair the leak. The bent flange must be repaired also. Before attempting to repair a leak, check for the following conditions and correct them as they may cause a leak.

Gaskets

- The fluid level/pressure is too high.
- The crankcase ventilation system is malfunctioning.
- The fasteners are tightened improperly or the threads are dirty or damaged.
- The flanges or the sealing surface is warped.
- There are scratches, burrs or other damage to the sealing surface.
- The gasket is damaged or worn.
- There is cracking or porosity of the component.
- An improper seal was used (where applicable).

Seals

- The fluid level/pressure is too high.
- The crankcase ventilation system is malfunctioning.
- The seal bore is damaged (scratched, burred or nicked).
- The seal is damaged or worn.
- Improper installation is evident.
- There are cracks in the component.
- The shaft surface is scratched, nicked or damaged.
- A loose or worn bearing is causing excess seal wear.

KNOCK DIAGNOSIS

Definition for Knock

Engine knock refers to various types of engine noise. Heavy knock is usually very loud and the result of broken or excessively worn internal engine components. Light knock is a noticeable noise, but not as loud. Light knock can be caused by worn internal engine components. Loose or broken external engine components can also cause heavy or light knock.

Engine Knocks Cold and Continues for Two-Three Minutes and/or Knock Increases with Engine Torque

Step	Action	Value(s)	Yes	No
1	Does the engine knock when it is cold and continue for two to three minutes or does the knock increase with torque?	-	Go to *Step 2*	System OK
2	Inspect the flywheel. Is the flywheel contacting the splash shield?	-	Go to *Step 3*	Go to *Step 4*
3	Reposition the splash shield. Is the repair complete?	-	Go to *Step 1*	-
4	Inspect the balancer and the drive pulleys. Is either the balancer or the drive pulleys loose or broken?	-	Go to *Step 5*	Go to *Step 6*
5	Tighten or replace the balancer or the drive pulleys. Is the repair complete?	-	Go to *Step 1*	-
6	Inspect the piston-to-bore clearance. Is the clearance more than the value specified?	0.030 mm	Go to *Step 7*	Go to *Step 8*
7	1. Rebore the cylinder and hone to size. 2. Replace the piston. Is the repair complete?*	-	Go to *Step 1*	-
8	Inspect the connecting rod. Is the connecting rod bent?	-	Go to *Step 9*	System OK
9	Replace the connecting rod. Is the repair complete?	-	Go to *Step 1*	-

* Cold engine piston knock usually disappears when the cylinder is grounded out. Cold engine piston knock, which disappears in about 1.5 minutes, is considered acceptable.

Heavy Knock Hot with Torque Applied

Step	Action	Value(s)	Yes	No
1	Is there a heavy knock when the engine is hot and torque is applied?	-	Go to *Step 2*	System OK
2	Inspect the balancer and pulley hub. Is the balancer or pulley hub broken?	-	Go to *Step 3*	Go to *Step 4*
3	Replace the broken balancer or pulley hub. Is the repair complete?	-	Go to *Step 1*	-
4	Inspect the torque converter bolts. Are the bolts tightened to value specified?	60 N•m	Go to *Step 5*	Go to *Step 6*
5	Tighten the torque converter bolts. Is the repair complete?	-	Go to *Step 1*	-
6	Inspect the accessory belts. Are the belts too tight or nicked?	-	Go to *Step 7*	Go to *Step 8*
7	Replace and/or tension the belts to specifications as necessary. Is the repair complete?	-	Go to *Step 1*	-
8	Inspect the exhaust system. Is the system grounded?	-	Go to *Step 9*	Go to *Step 10*
9	Reposition the system as necessary. Is the repair complete?	-	Go to *Step 1*	-
10	Inspect the flywheel. Is the flywheel cracked?	-	Go to *Step 11*	Go to *Step 12*
11	Replace the flywheel. Is the repair complete?	-	Go to *Step 1*	-
12	Inspect the main bearing clearance. Is the clearance more than the value specified?	0.040 mm	Go to *Step 13*	Go to *Step 14*
13	Replace the main bearings as necessary. Is the repair complete?	-	Go to *Step 1*	-
14	Inspect the rod bearing clearance. Is the clearance more than the value specified?	0.063 mm	Go to *Step 15*	System OK
15	Replace the rod bearings as necessary. Is the repair complete?	-	Go to *Step 1*	-

Light Knock Hot

Step	Action	Value(s)	Yes	No
1	Is there a light knock when the engine is hot?	-	Go to *Step 2*	System OK
2	Is detonation or spark knock evident?	-	Go to *Step 3*	Go to *Step 4*
3	Check the engine timing and the fuel quality. Was the problem found?	-	Go to *Step 1*	-
4	Inspect the torque converter bolts. Are the bolts loose?	-	Go to *Step 5*	Go to *Step 6*
5	Tighten the torque converter bolts. Is the repair complete?	-	Go to *Step 1*	-
6	Inspect the manifold. Is there an exhaust leak at the manifold?	-	Go to *Step 7*	Go to *Step 8*
7	Tighten the bolts or replace the gasket. Is the repair complete?	-	Go to *Step 1*	-
8	Check the rod bearing clearance. Is the clearance within the value specified?	0.019- 0.063 mm	Go to *Step 9*	System OK
9	Replace the rod bearings as necessary. Is the repair complete?	-	Go to *Step 1*	-

Knocks During Initial StartUp But Lasts Only a Few Seconds

Step	Action	Value(s)	Yes	No
1	Does the engine knock during initial startup but last only a few seconds?	-	Go to *Step 2*	System OK
2	Check the engine oil. Is the proper viscosity oil used in the crankcase?	-	Go to *Step 4*	Go to *Step 3*
3	Install oil of the proper viscosity for the expected seasonal temperatures. Is the repair complete?	-	Go to *Step 1*	-
4	Inspect the hydraulic lifters. Is there evidence of hydraulic lifter bleeddown?	-	Go to *Step 5*	Go to *Step 6*
5	Clean, test and replace the lifters as necessary. Is the repair complete?*	-	Go to *Step 1*	-
6	Inspect the crankshaft end clearance. Is the clearance more than value specified?	0.302 mm	Go to *Step 7*	Go to *Step 8*
7	Replace the crankshaft thrust bearing. Is the repair complete?	-	Go to *Step 1*	-
8	Inspect the front main bearing clearance. Is the clearance more than the value specified?	0.040 mm	Go to *Step 9*	System OK
9	Replace the worn parts of the front main bearing. Is the repair complete?	-	Go to *Step 1*	-

* When the engine is stopped, some valves will be open. Spring pressure against the lifters will tend to bleed lifter down. Attempts to repair this should be made only if the problem is consistent.
An engine that is operated for only short periods between startups may have lifter noise that lasts for a few minutes. This is a normal condition.

Knocks at Idle Hot

Step	Action	Value(s)	Yes	No
1	Does the engine knock at idle when hot?	-	Go to *Step 2*	System OK
2	Inspect the drive belts. Are the belts loose or worn?	-	Go to *Step 3*	Go to *Step 4*
3	Tension or replace the belts as necessary. Is the repair complete?	-	Go to *Step 1*	-
4	Inspect the A/C compressor and the generator. Is either the compressor or the generator faulty?	-	Go to *Step 5*	Go to *Step 6*
5	Replace the faulty A/C compressor or the generator. Is the repair complete?	-	Go to *Step 1*	-
6	Inspect the valve train. Are valve train components faulty?	-	Go to *Step 7*	Go to *Step 8*
7	Replace faulty valve train components. Is the repair complete?	-	Go to *Step 1*	-
8	Check the engine oil. Is the proper viscosity oil used in the crankcase?	-	Go to *Step 10*	Go to *Step 9*
9	Install oil of the proper viscosity for the expected seasonal temperatures. Is the repair complete?	-	Go to *Step 1*	-
10	Inspect the piston pin clearance. Is the clearance more than the value specified?	0.014 mm	Go to *Step 11*	Go to *Step 12*
11	Replace the piston and the pin. Is the repair complete?	-	Go to *Step 1*	-
12	Check the connecting rod alignment. Is the alignment faulty?	-	Go to *Step 13*	Go to *Step 14*
13	Check and replace rods as necessary. Is the repair complete?	-	Go to *Step 1*	-
14	Inspect the pistontobore clearance. Is the clearance within the value specified?	0.03 mm	Go to *Step 16*	Go to *Step 15*
15	Hone the bore and fit a new piston. Is the repair complete?	-	Go to *Step 1*	-
16	Inspect the crankshaft balancer. Is the balancer loose?	-	Go to *Step 17*	Go to *Step 18*
17	Torque or replace worn parts. Is the repair complete?	-	Go to *Step 1*	-
18	Check the piston pin offset. Is the offset at the value specified?	0.8 mm Toward Thrust Side	Go to *Step 19*	System OK
19	Install the correct piston. Is the repair complete?	-	Go to *Step 1*	-

NOISE DIAGNOSIS

Main Bearing Noise

Step	Action	Value(s)	Yes	No
1	Are dull thuds or knocks heard with every engine revolution?	-	Go to *Step 2*	System OK
2	Check the oil pump pressure. Is the oil pump pressure low?	-	Go to *Oil Pressure Test*	Go to *Step 3*
3	Inspect the crankshaft end play. Is there excessive crankshaft end play?	0.070~0.302mm	Go to *Crankshaft Replacement Procedure*	Go to *Step 4*
4	Inspect the crankshaft journals. Are the crankshaft journals out of round?	-	Go to *Crankshaft Replacement Procedure*	Go to *Step 5*
5	Inspect the belt tension. Is there excessive belt tension?	-	Go to *Timing Belt Replacement Procedure*	Go to *Step 6*
6	Inspect the crankshaft pulley. Is the crankshaft pulley loose?	-	Go to *Crankshaft Replacement Procedure*	System OK

Connecting Rod Bearing Noise Symptom

Step	Action	Value(s)	Yes	No
1	Is a knock noise heard under all engine speeds?	-	Go to *Step 2*	System OK
2	Inspect the crankshaft connecting rod journal. Is the crankshaft connecting rod journal worn?	-	Go to *Crankshaft Replacement Procedure*	Go to *Step 3*
3	Check the oil pump pressure. Is the oil pump pressure low?	-	Go to *Oil Pressure Test*	Go to *Step 4*
4	Inspect the crankshaft connecting rod journals. Are the journals out of round?	-	Go to *Crankshaft Replacement Procedure*	Go to *Step 5*
5	Inspect the connecting rods. Is there a misaligned connecting rod?	-	Go to *Pistons and Rods Replacement Procedure*	Go to *Step 6*
6	Inspect the connecting rod bolts. Are the connecting rod bolts torqued properly?	-	System OK	Go to *Pistons and Rods Replacement Procedure*

Piston Noises

Step	Action	Value(s)	Yes	No
1	Are any of the following noises heard: a sharp double knock when the engine is idling, a light ticking with no load on the engine or a ``slapping'' noise when the engine is cold?	-	Go to *Step 2*	System OK
2	Inspect the piston pin and bushing. Is the piston pin or the bushing worn or loose?	-	Go to *Pistons and Rods Replacement Procedure*	Go to *Step 3*
3	Inspect the piston. Is the piston broken or cracked?	-	Go to *Pistons and Rods Replacement Procedure*	Go to *Step 4*
4	Inspect the connecting rods. Is there a misaligned connecting rod?	-	Go to *Pistons and Rods Replacement Procedure*	Go to *Step 5*
5	Inspect the piston position. Is the piston 180° out of position?	-	Go to *Pistons and Rods Replacement Procedure*	System OK

Valve Mechanism or Valve Train Noises

Step	Action	Value(s)	Yes	No
1	Is a light tapping sound heard from the engine?	-	Go to *Step 2*	System OK
2	Inspect the valve springs. Are the springs weak or broken?	-	Go to *Cylinder Head and Valve Train Components Replacement Procedure*	Go to *Step 3*
3	Inspect the valves. Are the valves sticking or warped?	-	Go to *Cylinder Head and Valve Train Components Replacement Procedure*	Go to Step 4
4	Inspect the valve lifters. Are the valve lifters dirty, stuck or worn?	-	Go to *Cylinder Head and Valve Train Components Replacement Procedure*	Go to *Step 5*
5	Inspect the camshaft lobes. Are the camshaft lobes damaged or improperly machined?	-	Go to *Camshaft Replacement Procedure*	Go to *Step 6*
6	Check the oil supply to the valve train. Is the oil supply insufficient or poor?	-	Go to *Cylinder Head and Valve Train Components Replacement Procedure*	Go to *Step 7*
7	Inspect the valve guides. Are the valve guides worn?	-	Go to *Cylinder Head and Valve Train Components Replacement Procedure*	Go to *Step 8*
8	Inspect the valve spring seat. Is the valve spring seat incorrect?	-	Go to *Cylinder Head and Valve Train Components Replacement Procedure*	System OK

GENERAL INFORMATION

CLEANLINESS AND CARE

An automobile engine is a combination of many machined, honed, polished and lapped surfaces with tolerances that are measured in the tenthousandths of an inch. When any internal engine parts are serviced, care and cleanliness are important. A liberal coating of engine oil should be applied to friction areas during assembly, to protect and lubricate the surfaces on initial operation. Proper cleaning and protection of machined surfaces and friction areas is part of the repair procedure. This is considered standard shop practice even if not specifically stated.

Whenever valve train components are removed for service, they should be kept in order. They should be installed in the same locations, and with the same mating surfaces, as when they were removed.

Battery cables should be disconnected before any major work is performed on the engine. Failure to disconnect cables may result in damage to wire harness or other electrical parts.

ON-ENGINE SERVICE

Caution: Disconnect the negative battery cable before removing or installing any electrical unit, or when a tool or equipment could easily come in contact with exposed electrical terminals. Disconnecting this cable will help prevent personal injury and damage to the vehicle. The ignition must also be in LOCK unless otherwise noted.

Notice: Any time the air cleaner is removed, the intake opening should be covered. This will protect against accidental entrance of foreign material, which could follow the intake passage into the cylinder and cause extensive damage when the engine is started.

SECTION 1B

SOHC ENGINE MECHANICAL

CAUTION: Disconnect the negative battery cable before removing or installing any electrical unit or when a tool or equipment could easily come in contact with exposed electrical terminals. Disconnecting this cable will help prevent personal injury and damage to the vehicle. The ignition must also be in LOCK unless otherwise noted.

TABLE OF CONTENTS

Specifications 1B-1
Engine Specifications 1B-1
Fastener Tightening Specifications 1B-4
Special Tools 1B-6
Special Tools Table 1B-6
Component Locator 1B-8
Upper End 1B-8
Lower End 1B-10
Maintenance and Repair 1B-12
On-Vehicle Service 1B-12
Valve Cover 1B-12
Cylinder Head and Gasket 1B-13
Camshaft 1B-24
Timing Belt Check and Adjust 1B-29
Timing Belt 1B-33
Oil Pan 1B-38
Oil Pump 1B-40
Engine Mount, Right Side 1B-45
Engine Mount, Forward 1B-47
Intake Manifold 1B-49
Exhaust Manifold 1B-52
Camshaft Gear 1B-54
Rear Timing Belt Cover 1B-56
Engine 1B-58
Pistons and Rods 1B-65
Unit Repair 1B-71
Cylinder Head and Valve Train Components 1B-71
Crankshaft 1B-79
Crankshaft Bearings and Connecting Rod Bearings - Gauging Plastic 1B-90
General Description and System Operation 1B-93
Cylinder Head and Gasket 1B-93
Crankshaft 1B-93
Timing Belt 1B-93
Oil Pump 1B-93
Oil Pan 1B-93
Exhaust Manifold 1B-93
Intake Manifold 1B-93
Camshaft 1B-93

SPECIFICATIONS

ENGINE SPECIFICATIONS

Application	2.0L SOHC
General Data:	
Engine Type	4-Cylinder (In-Line)
Displacement	1 998 cm^3 (121.92 in^3)
Bore Stroke	86 x 86 mm (3.38 x 3.38 in.)
Compression Ratio	9.2:1
Firing Order	1-3-4-2

ENGINE SPECIFICATIONS (Cont'd)

Application	2.0L SOHC
Cylinder Block:	
Cylinder Bore Diameter	85.975~86.025 mm (3.384~3.386 in.)
Cylinder Bore Out-of-Round (MAX)	0.013 mm (0.0005 in.)
Cylinder Bore Taper (MAX) Measured at Four Places, Transversely and Longitudinally	0.013 mm (0.0005 in.)
Oversize (Measure Replacement Piston Before ReBoring)	Available in 0.50 mm to suit bore (0.019 in.)
Service Replacement Standard Bore	4 Piston, Pin, and Ring Assemblies Available
Block Face Distortion	0.05 mm MAX (0.00197 in. MAX)
Piston:	
Diameter	85.955~86.485 mm (3.384~3.404 in.)
Clearance to Bore	0.030~0.050 mm (0.00117~0.00195 in.)
Piston Protrusion	0.4 mm MAX (0.015 in.)
Piston Taper	0.013 mm (0.0005 in.)
Piston Rings:	
Gap	
Top Compression	0.3~0.5 mm (0.011~0.019 in.)
2nd Compression	0.3~0.5 mm (0.011~0.019 in.)
Oil	0.4~1.4 mm (0.015~0.055 in.)
Piston Pin:	
Diameter	20.9970~20.9985 mm (0.8266~0.8267 in.)
Pin Off Set	0.8 mm (0.03 in.) Toward Thrust Side
Clearance:	
In Piston	0.0035~0.0140 mm (0.00013~0.00055 in.)
In Rod	Interference Fit in Rod
Length	61.5 mm (2.42 in.)
Camshaft:	
Lift-Intake	10.0 mm (0.39 in.)
Lift-Exhaust	10.0 mm (0.39 in.)
Camshaft Cap-to-Bearing Journal Clearance	0.04~0.144 mm (0.0015~0.0056 in.)
Bearing Journal OD	42.455~43.470 mm (1.67~1.71 in.)

ENGINE SPECIFICATIONS (Cont'd)

Application	2.0L SOHC
Crankshaft:	
Main Journal	
Diameter (All)	57.974~57.995 mm (2.282~2.283 in.)
Radial Runout (Shaft Support On No. 1 and No. 5 Bearings Measured at No. 3 Journal)	0.061 mm (0.0024 in.)
Main Bearing Clearance (All)	0.015~0.061 mm (0.00059~0.0024 in.)
Crankshaft End Float	0.0700.302 mm (0.0027~0.0118 in.)
Service Oversize (Available in Two Sizes)	0.25 and 0.5 mm (0.0098~0.019 in.)
Connecting Rod:	
Big End Journal Diameter (All)	48.981~48.987 mm (1.9283~1.9286 in.)
Permissible Out-of-Round (MAX)	0.004 mm (0.00001 in.)
Rod Bearing Play	0.006~0.031 mm (0.0002~0.0012 in.)
Rod Bearing Clearance	0.019~0.063 mm (0.0007~0.0024 in.) (Production 0.013~0.041mm [0.0005~0.0016 in.])
Cylinder Head:	
Valve Stem Protrusion	18.4 mm MAX (0.72 in. MAX)
Valve Guide Height	12.2~12.5 mm (0.480~0.492 in.)
Overall Height	96 ± 0.025 mm (3.778~3.780 in.)
Minimum Overall Height After Machining	95.5 mm (3.759 in.)
Valve System:	
Valve Lash Compensators	Hydraulic
Seat Runout (MAX, All)	0.03 mm (0.019 in.)
Face Runout (MAX, All)	0.03 mm (0.019 in.)
Valve Length (Production)	
Intake	104.2 mm (4.10 in.)
Exhaust	104.0 mm (4.09 in.)
Valve Length (Service)	
Intake	103.8 mm (4.08 in.)
Exhaust	103.6 mm (4.07 in.)

ENGINE SPECIFICATIONS (Cont'd)

Application	2.0L SOHC
Valve Stem Diameter	
Intake	6.998~7.012 mm (0.275~0.276 in.)
Exhaust	6.978~6.992 mm (0.274~0.275 in.)
Valve Diameter	
Intake	41.8 mm (1.645 in.)
Exhaust	36.5 mm (1.437 in.)
Valve Seat Width	
Intake	1.0~1.5 mm (0.039~0.059 in.)
Exhaust	1.7~2.2 mm (0.066~0.086 in.)
Valve Face Angle	44°
Valve Seat Angle	45°
Valve Guide Inside Diameter	7.030~7.050 mm (0.276~0.277 in.)

FASTENER TIGHTENING SPECIFICATIONS

Application	N•m	Lb•Ft	Lb•In
Air Filter Housing Bolts	8	-	71
Camshaft Gear Retaining Bolt	45	33	-
Camshaft Pressure Plate Bolts	10	-	89
Connecting Rod Bearing Cap Bolts	35 + 45° + 15°	26 + 45° + 15°	-
Coolant Manifold Mounting Bolts	15	11	-
Coolant Temperature Sensor	25	18	-
Crankshaft Bearing Cap Bolts	35 + 45°	26 + 45°	-
Crankshaft Pulley Bolts	20	15	-
Crankshaft Timing Belt Drive Gear Bolt	95 + 30° + 15°	70 + 30° + 15°	-
Cylinder Head Bolts	25 + 90° + 90° + 90°	18 + 90° + 90° + 90°	-
DIS Ignition Coil Mounting Bracket Bolts	10	-	89
DIS Ignition Coil Mounting Plate Bolts	10	-	89
DIS Ignition Coil Retaining Bolts	10	-	89
Engine Block Lower Support Bracket and Splash Shield Bolts	40	30	-
Exhaust Flex PipetōCatalytic Converter Retaining Nuts	30	22	-
Exhaust Flex PipetōExhaust Manifold Retaining Nuts	22	16	-
Exhaust Manifold Heat Shield Bolts	15	11	-

FASTENER TIGHTENING SPECIFICATIONS (Cont'd)

Application	N•m	Lb•Ft	Lb•
Exhaust Manifold Retaining Nuts	15	11	-
Flexible Plate Bolts	65	48	-
Flywheel Bolts	65 + 30° + 15°	48 + 30° + 15°	-
Forward Engine Mount Bolts/Nuts	65	48	-
Forward Engine Mount Bracket to Engine Block Bolts/Nuts	90	66	-
Front Timing Belt Cover Bolts	6	-	53
Injector Cover Bolts	8	-	71
Intake Manifold Retaining Nuts	18	13	-
Oil Pan Drain Plug	35	26	-
Oil Pan Flange to Transaxle Retaining Bolts	40	30	-
Oil Pan Retaining Bolts	10	-	89
Oil Pressure Switch	40	29	-
Oil Pump Rear Cover Bolts	6	-	53
Oil Pump Retaining Bolts	10	-	89
Oil Pump Safety Relief Valve Bolt	30	22	-
Oil Pump/Pickup Tube Support Bracket Bolts	10	-	89
Oil Pump/Pickup Tube Bolts	8	-	71
Power Steering Pressure Hose Clamp Bolt	10	-	89
Pulse Pickup Sensor Disc	13	-	115
Rear Timing Belt Cover Bolts	6	-	53
Resonator Retaining Bolts	8	-	71
Right Side Engine Mount Bracket Retaining Bolts/Nuts	60	44	-
Right Side Engine Mount Retaining Bolts/Nuts	60	44	-
Spark Plugs	20	15	-
Thermostat Housing Mounting Bolts	15	11	-
Throttle Cable Bracket Bolts	8	-	71
Timing Belt Automatic Tensioner Bolt	25	18	-
Transaxle Bell Housing Bolts	75	55	-
Transaxle Torque Converter Bolts	60	44	-
Valve Cover Bolts	8	-	71

SPECIAL TOOLS

SPECIAL TOOLS TABLE

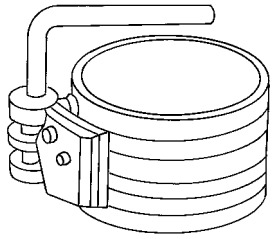 C102B004	**J-8037 Universal Piston Ring Compressor**
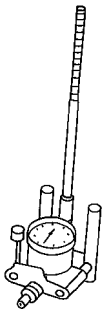 C102B005	**J-8087 Cylinder Bore Check Gauge**
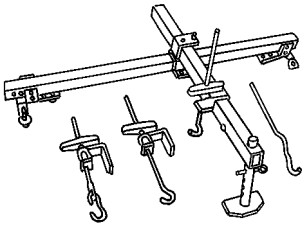 A102B152	**J-28467-B Engine Assembly Support Fixture**
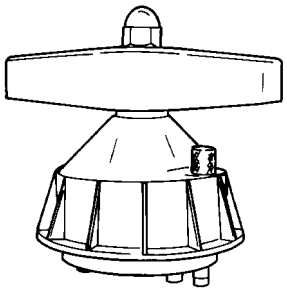 A102C155	**J-36792 Crankshaft Rear Oil Seal Installer**
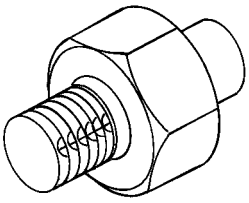 B102C044	**KM-135 Adapter**
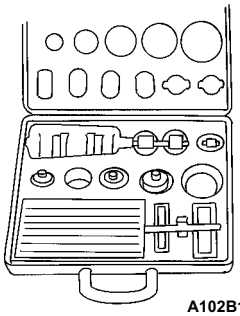 A102B156	**KM-340-0 Cutter Set** **Includes: KM-340-7** **KM-340-13** **KM-340-26**
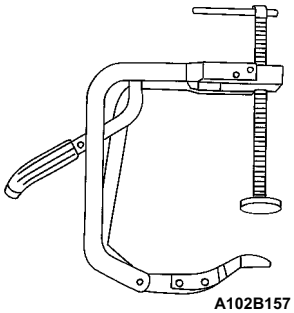 A102B157	**KM-348 Valve Spring Compressor**
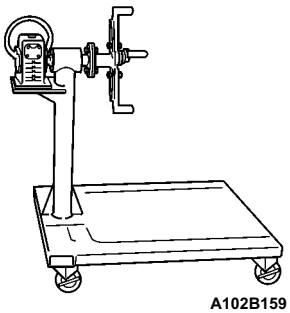 A102B159	**KM-412 Engine Overhaul Stand**

SPECIAL TOOLS TABLE (Cont'd)

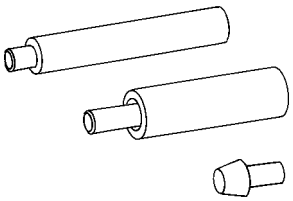 A102B153	**KM-427 Piston Pin Service Set**
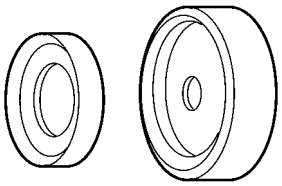 A102B160	**KM-635 Crankshaft Rear Oil Seal Installer**
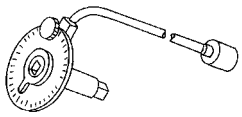 A102B161	**KM-470-B Angular Torque Gauge**
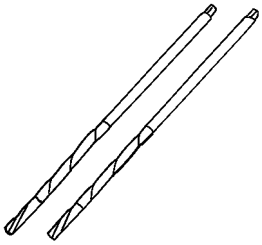 C102B017	**KM-664 Valve Guide Reamer Set** Includes: **KM-253 KM-254 KM-255**
C102B016	**KM-512 Valve Stem Projection Gauge**
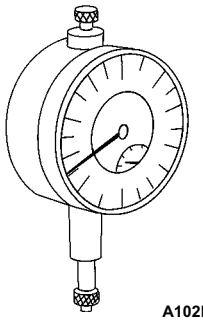 A102B154	**MKM-571-B Gauge**
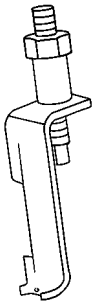 A102B150	**KM-565-A Valve Spring Compressor**
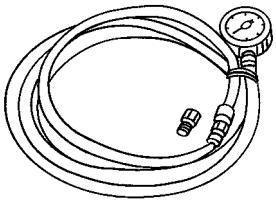 A202B005	**KM-498-B Pressure Gauge**

COMPONENT LOCATOR

UPPER END

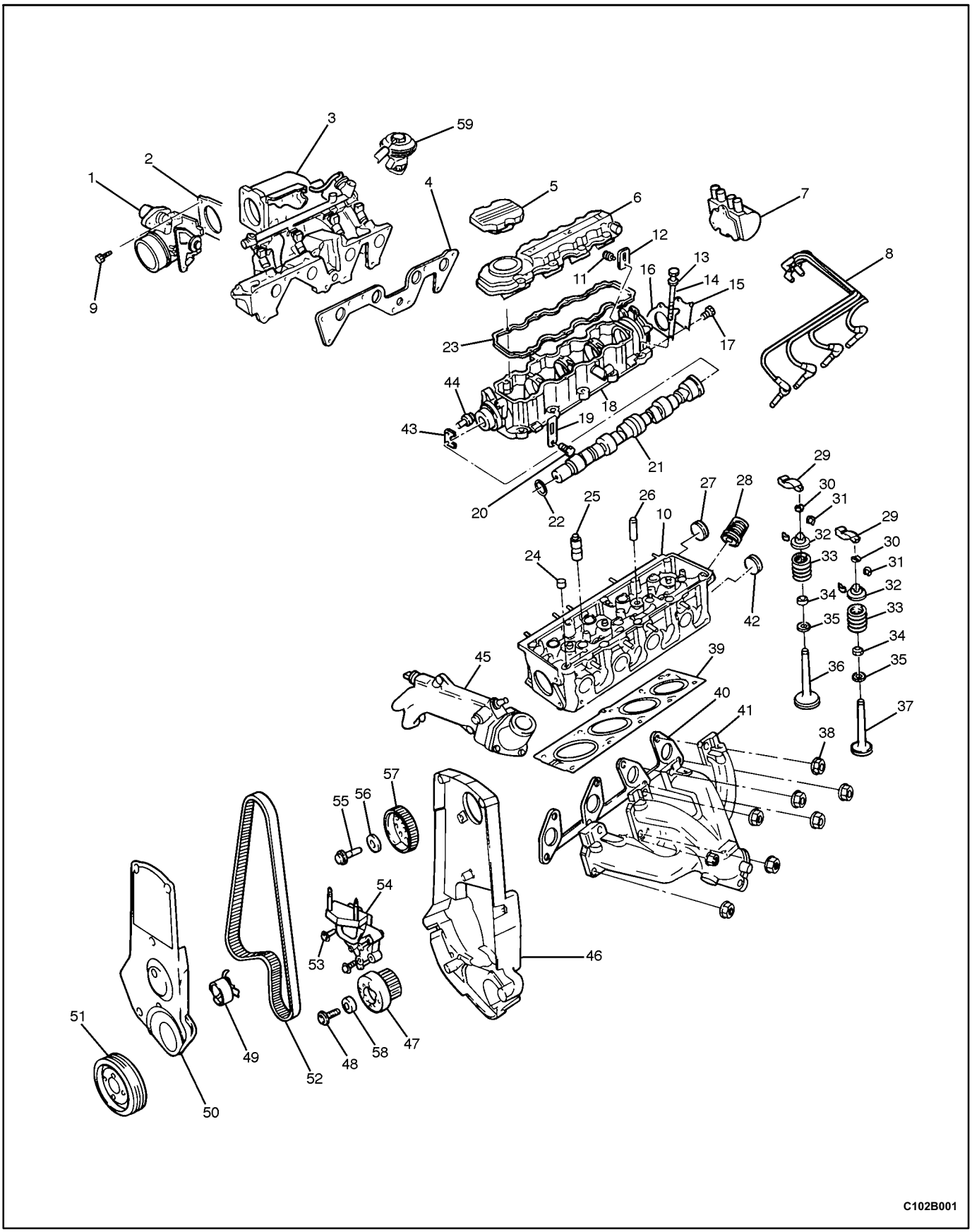

1 Throttle Body
2 Gasket
3 Intake Manifold
4 Gasket
5 Filler Cap
6 Valve Cover, Cam Carrier
7 Ignition Coil
8 Ignition Wires
9 Bolt
10 Stud
11 Bolt
12 Shackle
13 Washer
14 Bolt, Head
15 Cover
16 Gasket
17 Bolt
18 Carrier Assembly, Camshaft
19 Shackle
20 Bolt
21 Camshaft
22 Seal Ring
23 Gasket
24 Sleeve
25 Lifter
26 Guide, Valve
27 Plug, Water Jacket
28 Valve, Bypass
29 Follower, Camshaft
30 Thrust Piece, Valve
31 Retainer
32 Cap, Valve
33 Spring
34 Seal
35 Seat, Valve Spring
36 Valve, Intake
37 Valve, Exhaust
38 Nut
39 Gasket, Head
40 Gasket, Exhaust Manifold
41 Exhaust Manifold
42 Cap, Oil Access Hole
43 Plate, Retainer
44 Bolt
45 Coolant Manifold
46 Rear Timing Belt Cover
47 Crankshaft Gear
48 Bolt
49 Timing Belt Tensioner
50 Front Timing Belt Cover
51 Crankshaft Pulley
52 Timing Belt
53 Bolt
54 Engine Mount
55 Bolt
56 Washer
57 Camshaft Gear
58 Washer
59 EGR Valve

LOWER END

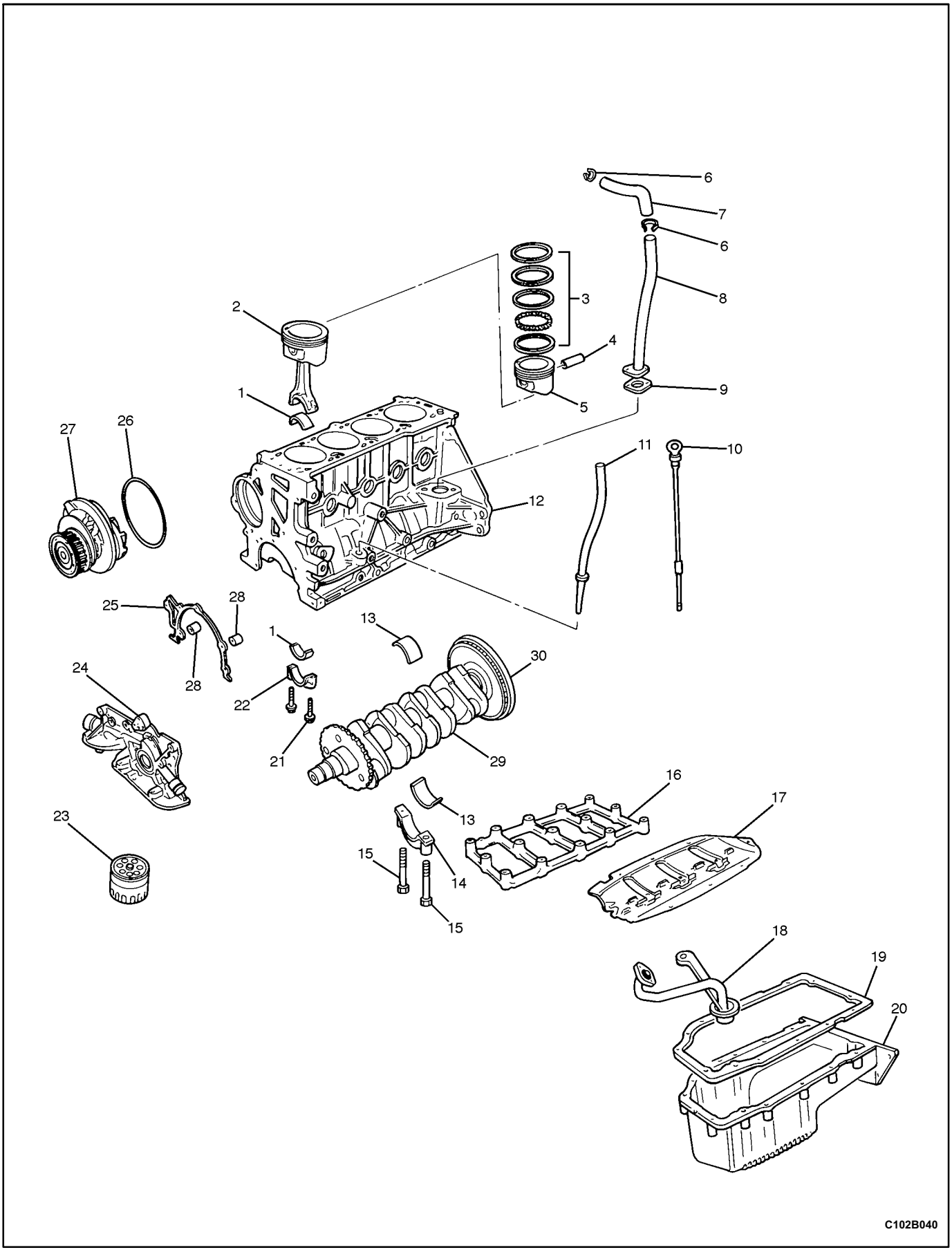
6
7
6
8
3
2
4
9
5
1
27
26
11
10
12
25
28
13
1
30
24
28
22
21
29
16
17
23
13
15
14
15
18
19
20
C102B040

1 Connecting Rod Bearing Shell
2 Piston Assembly
3 Piston Rings
4 Piston Pin
5 Piston
6 Hose Clamp
7 Breather Tube
8 Ventilation Pipe
9 Gasket
10 Dipstick
11 Dipstick Tube
12 Engine Block
13 Crankshaft Bearing Shell
14 Crankshaft Bearing Cap
15 Bolt
16 Engine Block Lower Support
17 Splash Pan
18 Oil Pickup Tube
19 Gasket
20 Oil Pan
21 Connecting Rod Bolt
22 Connecting Rod Bearing Cap
23 Oil Filter
24 Oil Pump
25 Gasket
26 Oring seal
27 Coolant Pump
28 Pilot Bushing
29 Crankshaft
30 Flywheel or Flex Plate

MAINTENANCE AND REPAIR

ON-VEHICLE SERVICE

VALVE COVER

Removal Procedure

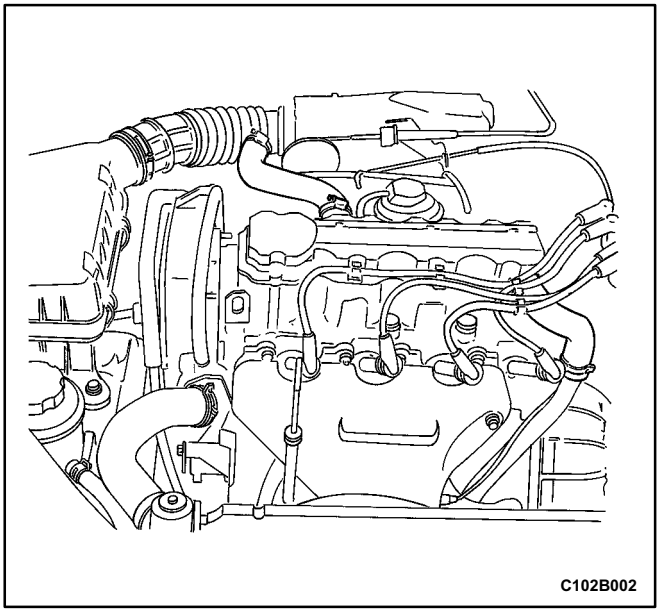

1. Disconnect the negative battery cable.
2. Remove the injector cover bolts.
3. Remove the injector cover.
4. Disconnect the breather tubes from the valve cover.

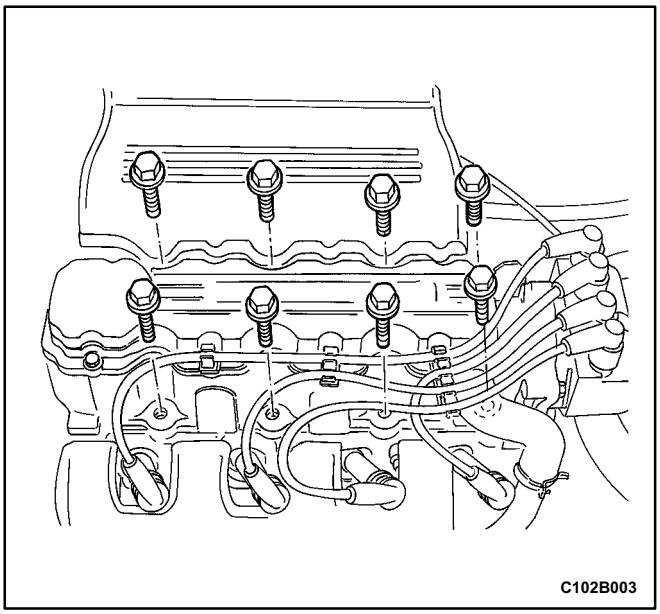

5. Disconnect all of the necessary vacuum lines.
6. Remove the valve cover bolts.
7. Remove the valve cover.
8. Remove the valve cover gasket from the valve cover.

Installation Procedure

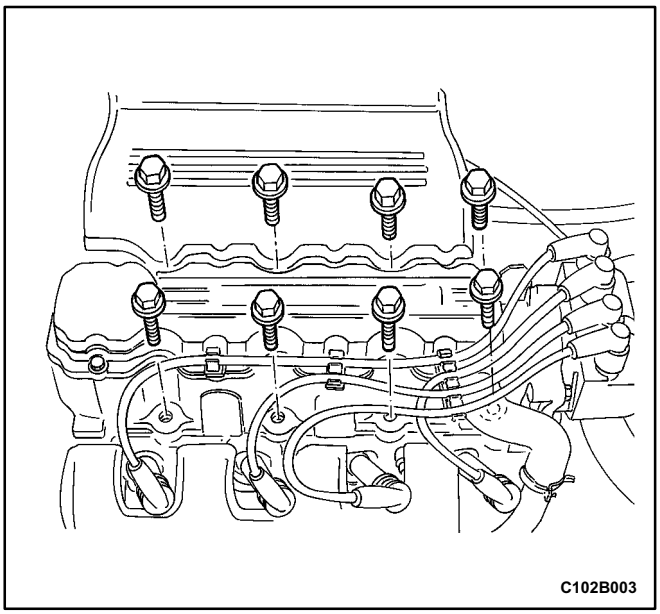

1. Install a new valve cover gasket to the valve cover.
2. Install the valve cover.
3. Install the valve cover bolts.

   Tighten

   Tighten the valve cover bolts to 8 N•m (71 lb•in).

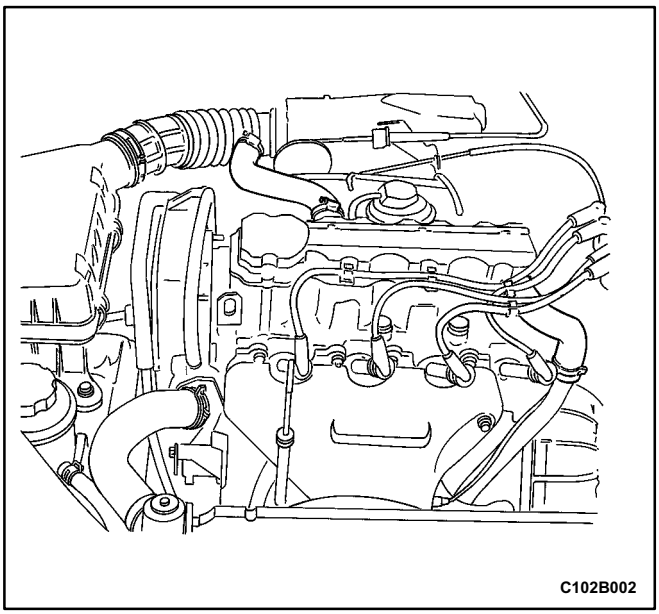

4. Connect all of the necessary vacuum lines.
5. Connect the breather tubes to the valve cover.
6. Install the injector cover.
7. Install the injector cover bolts.

Tighten

Tighten the injector cover bolts to 8 N•m (71 lb•in).

8. Connect the negative battery cable.

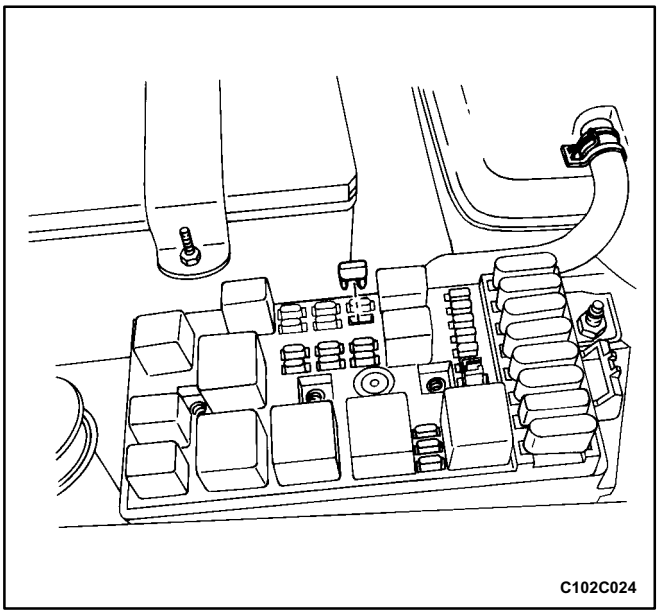

CYLINDER HEAD AND GASKET

Tools Required

KM-470-B Angular Torque Gauge

Removal Procedure

1. Remove the fuel pump fuse.
2. Start the engine. After it stalls, crank the engine for 10 seconds to rid the fuel system of fuel pressure.
3. Disconnect the negative battery cable.
4. Disconnect the ECM ground terminal.
5. Drain the engine coolant. Refer to *Section 1D, Engine Cooling.*

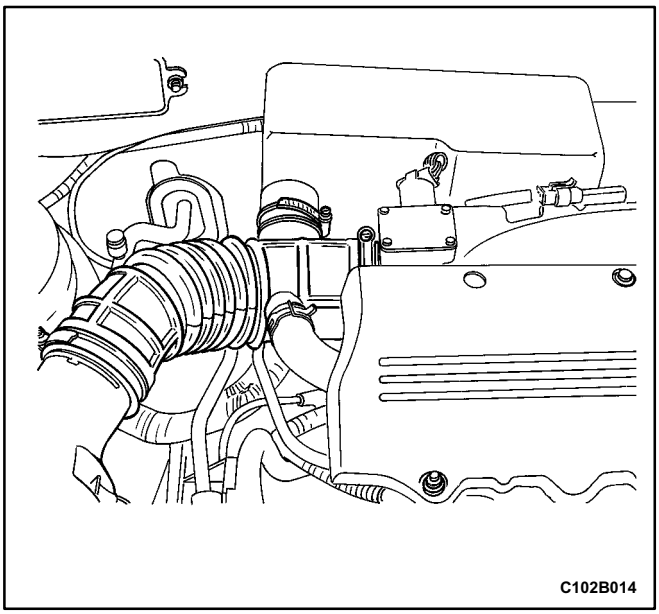

6. Disconnect the manifold air temperature sensor connector.
7. Disconnect the breather tubes from the air intake tube.
8. Disconnect the air intake tube from the throttle body.
9. Disconnect the DIS ignition coil connector.
10. Disconnect the oxygen sensor connector.

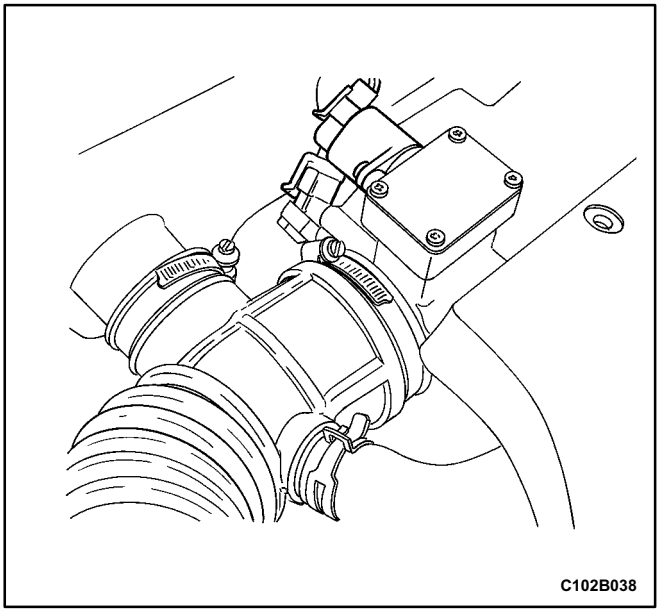

11. Disconnect the idle air control valve connector.
12. Disconnect the throttle position sensor connector.
13. Disconnect the engine coolant temperature sensor connector.
14. Disconnect the coolant temperature sensor connector.
15. Remove the air filter housing bolts.
16. Remove the air filter housing.
17. Remove the bolts and the injector cover.
18. Remove the bolts and the resonator.

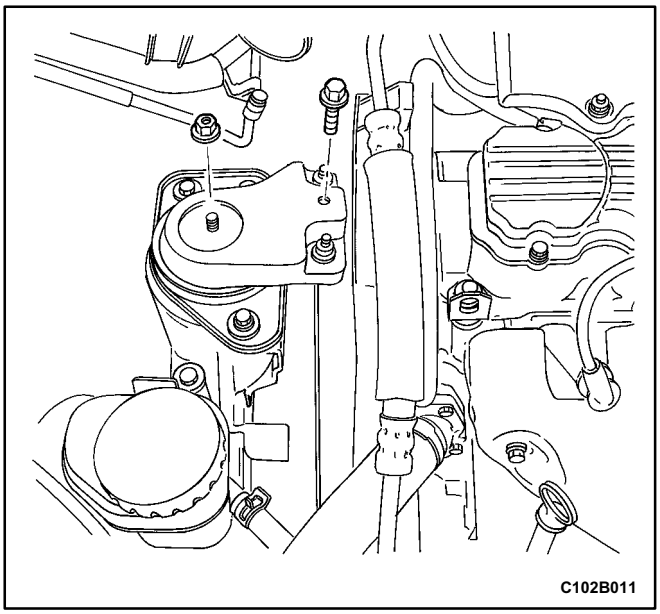

19. Remove the right front wheel. Refer to *Section 2E, Tires and Wheels.*
20. Remove the right front wheel well splash shield. Refer to *Section 9R, Body Front End.*
21. Support the engine with a floor jack.
22. Remove the bolts and the right side engine mount bracket.

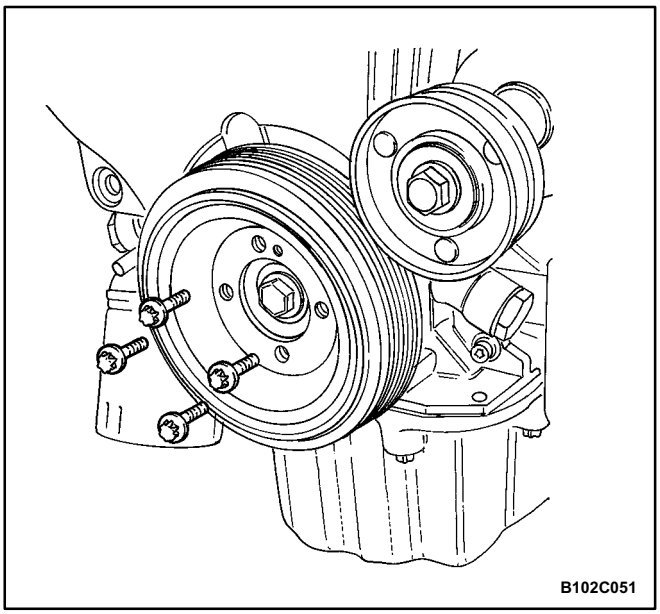

23. Disconnect the upper radiator hose at the thermostat housing.
24. Remove the serpentine accessory drive belt. Refer to *Section 6B, Power Steering Pump*.
25. Remove the crankshaft pulley bolts.
26. Remove the crankshaft pulley.

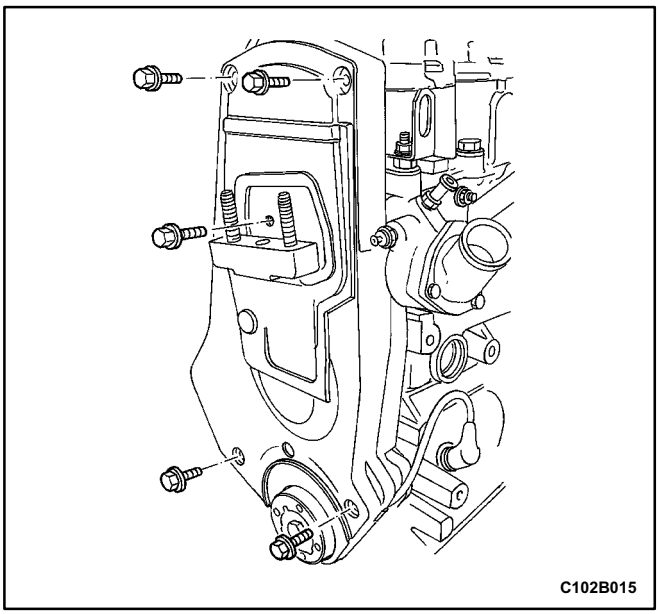

27. Remove the front timing belt cover bolts.
28. Remove the front timing belt cover.

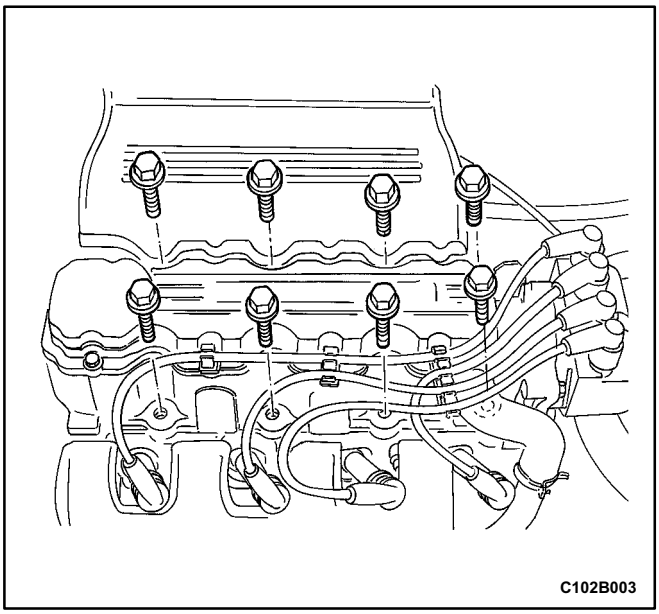

29. Remove the timing belt. Refer to Timing Belt" in this section.
30. Disconnect the breather tubes at the valve cover.
31. Remove the valve cover bolts.
32. Remove the valve cover and the valve cover gasket.
33. Disconnect the ignition wires from the spark plugs.

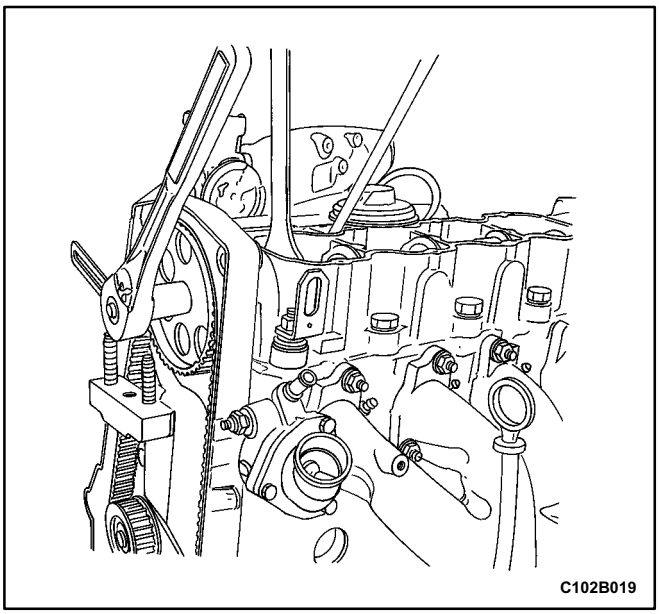

Notice: Take extreme care to prevent any scratches, nicks or damage to the camshaft.

34. While holding the camshaft firmly in place, remove the camshaft gear bolt.
35. Remove the camshaft gear.

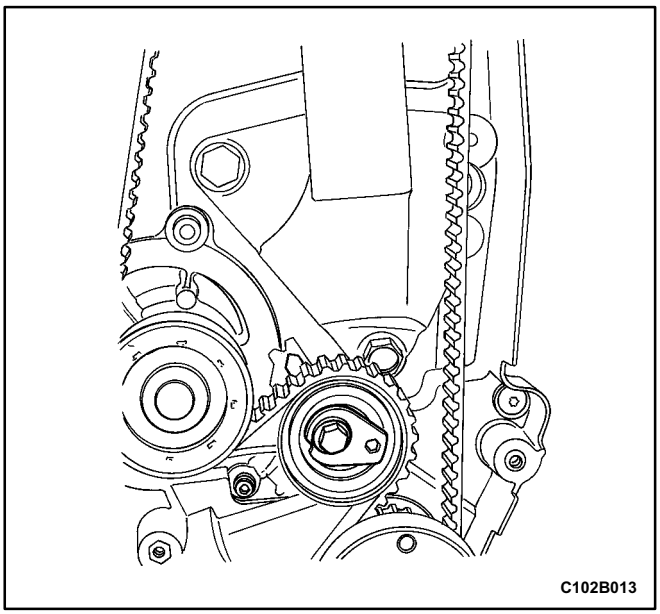

36. Remove the timing belt automatic tensioner bolt.
37. Remove the timing belt automatic tensioner.

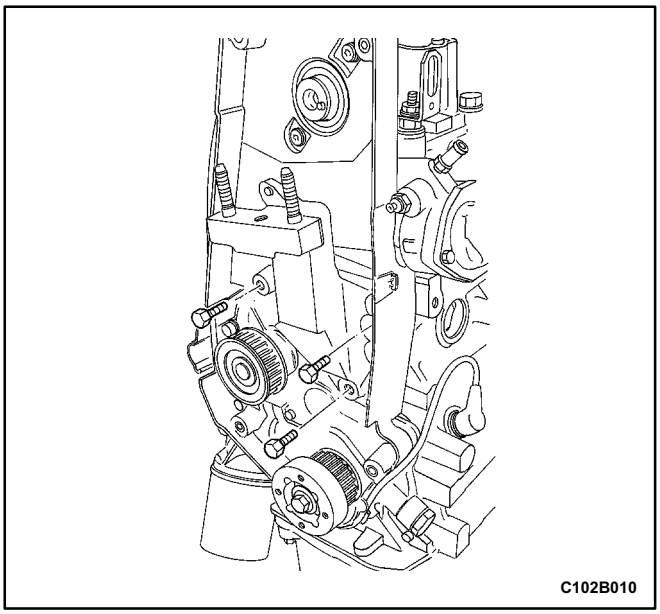

38. Remove the right side engine mount bolts/nuts.
39. Remove the right side engine mount.
40. Remove the crankshaft gear bolt.
41. Remove the crankshaft gear.
42. Reroute the crankshaft position sensor wire away from the rear timing belt cover.

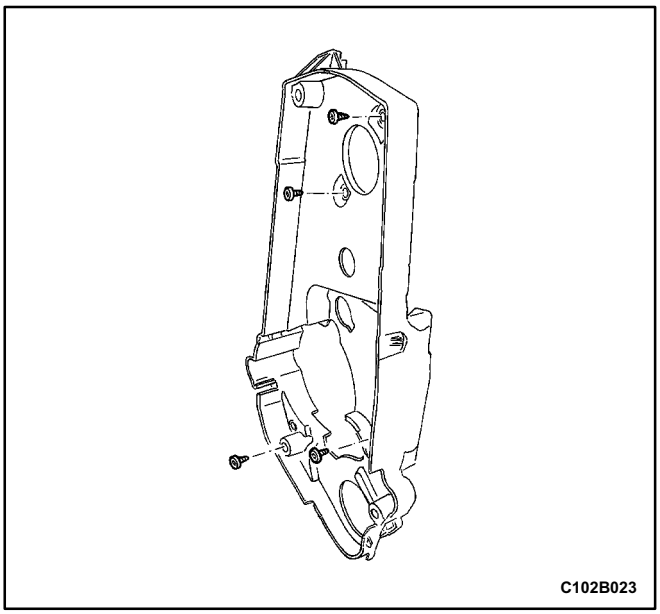

43. Remove the rear timing belt cover bolts.
44. Remove the rear timing belt cover.

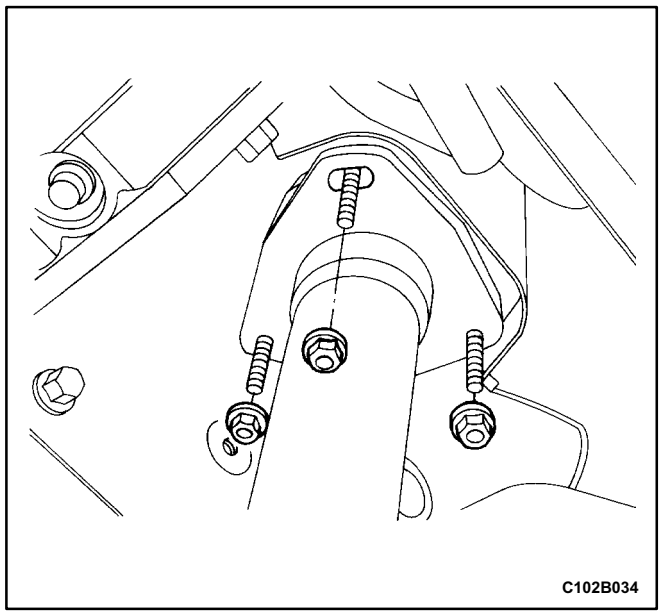

45. Remove the exhaust flex pipe retaining nuts at the exhaust manifold studs.
46. Disconnect all of the necessary vacuum hoses.

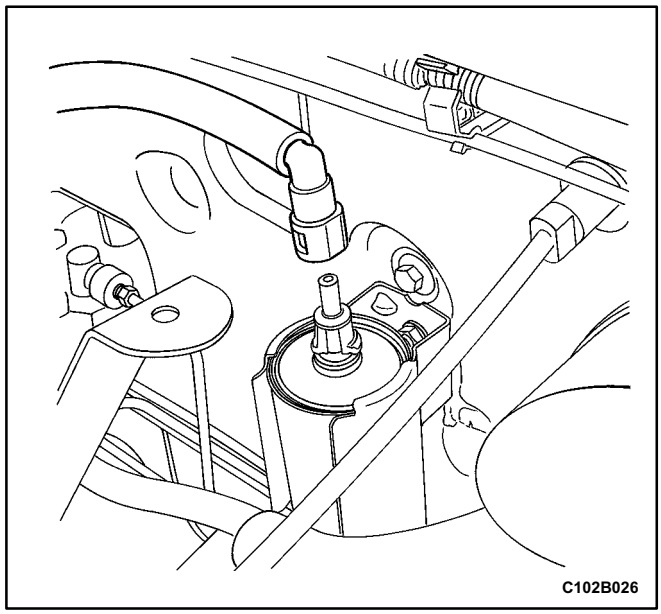

47. Disconnect the fuel return line at the fuel pressure regulator.
48. Disconnect the fuel feed line at the fuel filter.
49. Disconnect the coolant hoses at the rear of the coolant manifold.
50. Disconnect the surge tank coolant hoses at the throttle body.
51. Disconnect the fuel injector harness connectors.

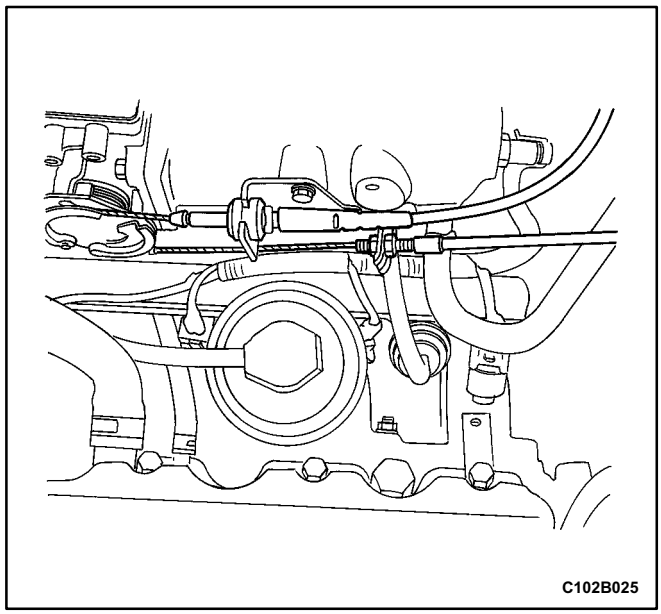

52. Remove the alternator support bracket bolts and the bracket. Refer to *Section 1E, Engine Electrical*.
53. Remove the alternator. Refer to *Section 1E, Engine Electrical*.
54. Disconnect the throttle cable at the throttle body and the intake manifold.
55. Disconnect the canister purge solenoid connector.

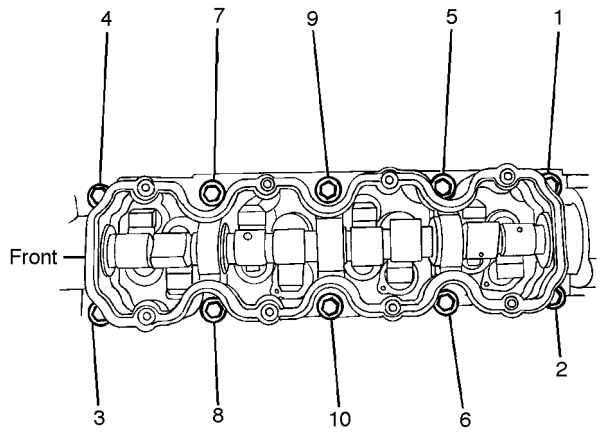

C102B045

56. Loosen all of the cylinder head bolts gradually and in the sequence shown.
57. Remove the cylinder head bolts.
58. Remove the camshaft carrier assembly.
59. Remove the cylinder head with the intake manifold and the exhaust manifold attached.

Notice: Prevent any engine oil or coolant from entering the cylinders when removing the cylinder head.

60. Remove the cylinder head gasket.

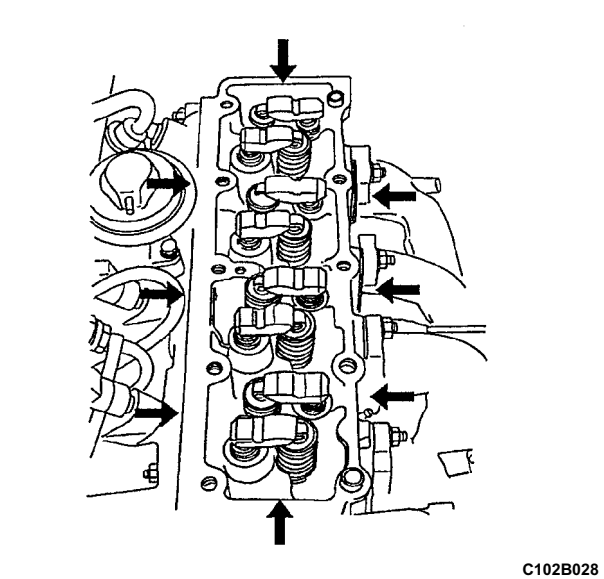
C102B028

Cleaning Procedure

1. Clean the gasket surfaces of the cylinder head and the engine block.
2. Make sure the gasket surfaces of the cylinder head and the engine block are free of nicks and heavy scratches.
3. Clean the cylinder head bolts.
4. Inspect the cylinder head for warpage. Refer to "Cylinder Head and Valve Train Components" in this section.

Installation Procedure

1. Apply a continuous 3 mm bead of gasket maker to the sealing surface of the camshaft carrier.
2. Install the cylinder head gasket.
3. Install the cylinder head with the intake manifold and the exhaust manifold attached.
4. Install the camshaft carrier assembly.
5. Install the cylinder head bolts.
6. Tighten the cylinder head bolts gradually and in the sequence shown.

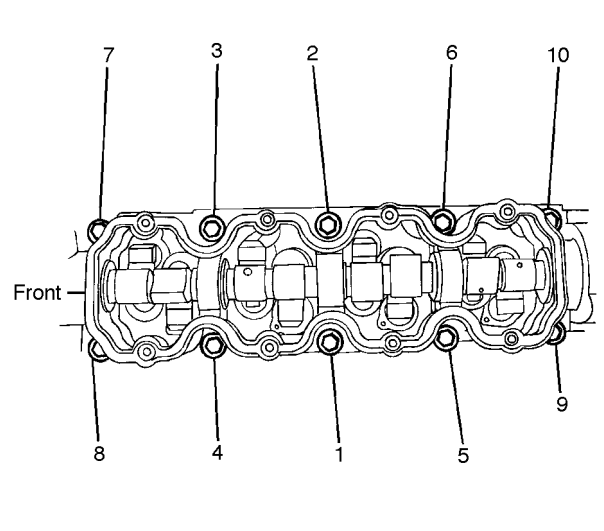

C102B033

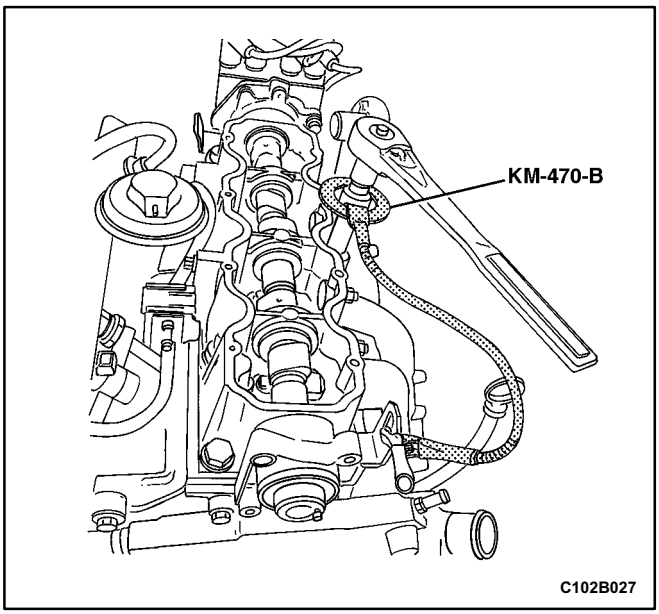

Tighten

Tighten the cylinder head bolts to 25 N•m (18 lb•ft) using a torque wrench. Use the angular torque gauge KM-470-B to tighten the cylinder head bolts 90 degrees plus 90 degrees plus 90 degrees.

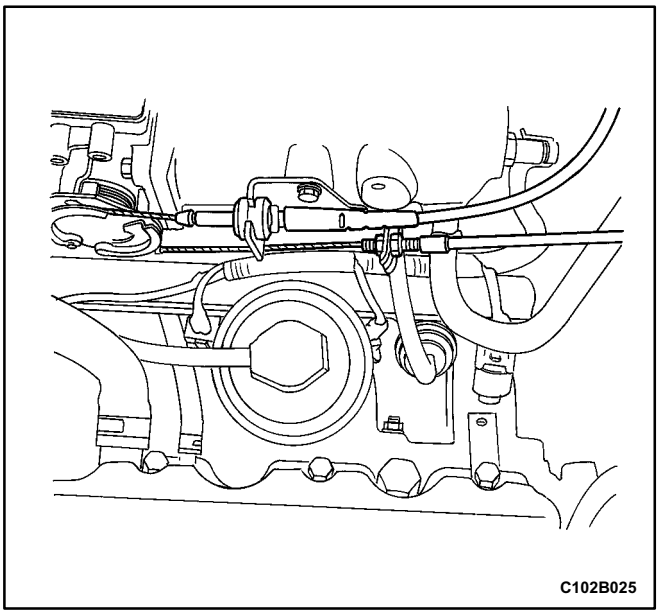

7. Connect the throttle cable at the throttle body and the intake manifold.
8. Install the alternator and the support bracket. Refer to *Section 1E, Engine Electrical*.
9. Connect the coolant surge tank hose at the throttle body.

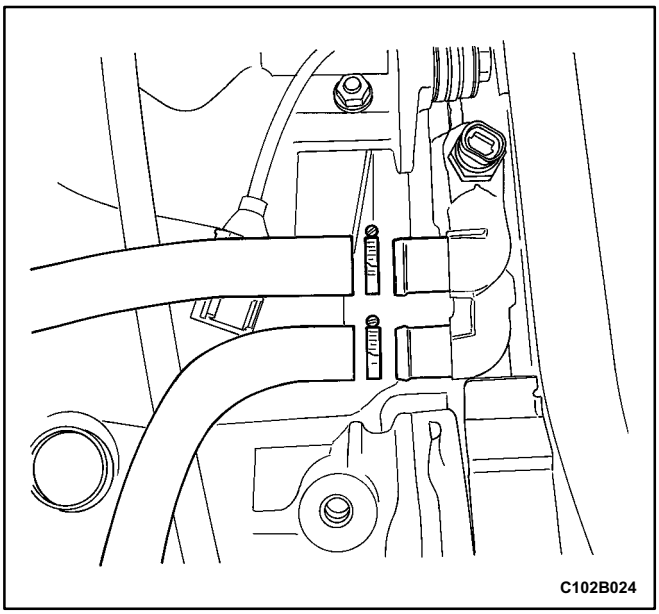

10. Connect the coolant hoses to the rear of the coolant manifold.
11. Connect the canister purge solenoid connector.

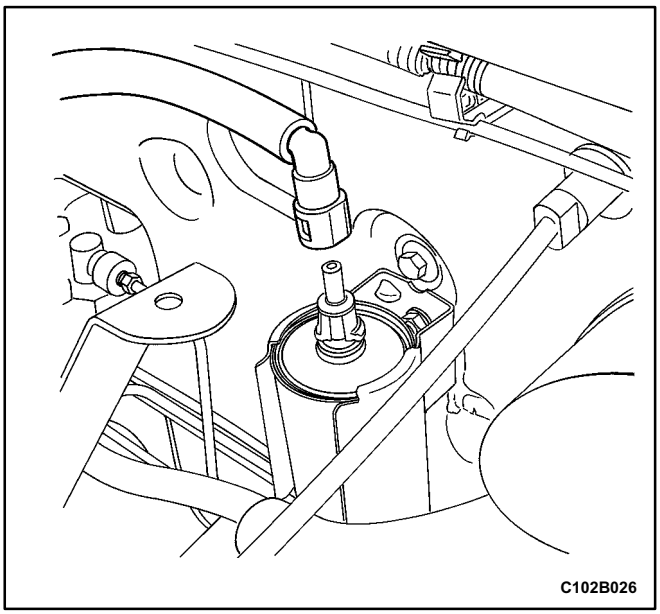

12. Connect the fuel feed line to the fuel filter.
13. Connect the fuel return line at the fuel rail.
14. Connect all of the necessary vacuum hoses.
15. Connect the fuel injector harness connectors.

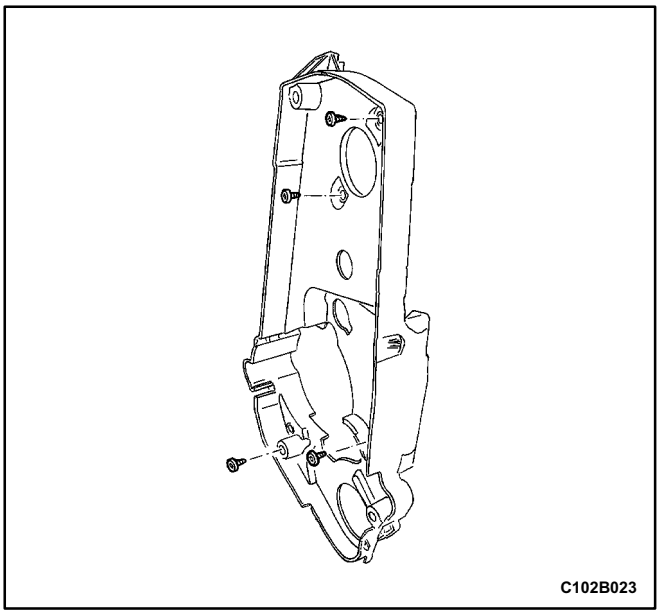

16. Install the exhaust flex pipe retaining nuts at the exhaust manifold flange.

Tighten

Tighten the exhaust flex pipe to exhaust manifold retaining nuts to 22 N•m (16 lb•ft).

17. Install the rear timing belt cover.
18. Install the rear timing belt cover bolts.

Tighten

Tighten the rear timing belt cover bolts to 6 N•m (53 lb•in).

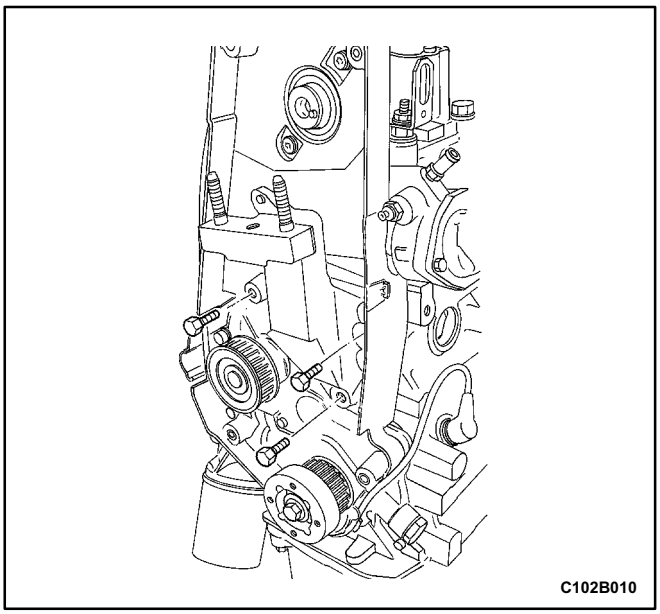

19. Install the engine mount and the retaining bolts/nuts.

Tighten

Tighten the right side engine mount retaining bolts/nuts to 60 N•m (44 lb•ft).

20. Install the crankshaft timing belt drive gear.
21. Install the crankshaft timing belt drive gear bolt.

Tighten

Tighten the crankshaft timing belt drive gear bolt to 95 N•m (70 lb•ft). Using the angular torque gauge KM-470-B, tighten the crankshaft gear bolt 30 degrees plus 15 degrees.

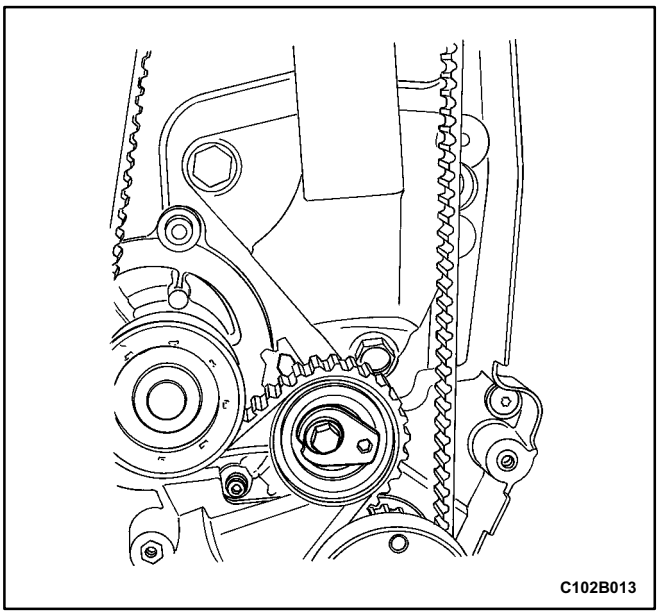

22. Install the timing belt automatic tensioner.
23. Install the timing belt automatic tensioner bolt.

Tighten

Tighten the timing belt automatic tensioner bolt to 25 N•m (18 lb•ft).

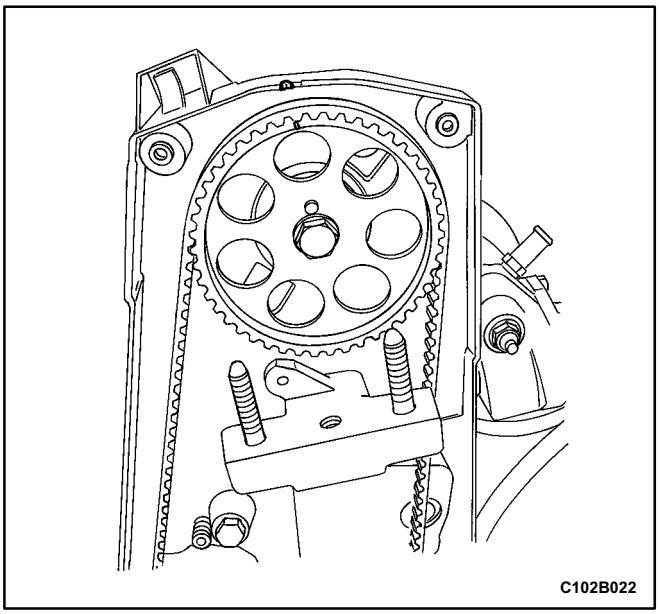

24. Install the camshaft gear with the timing mark aligned to the notch on the cover.

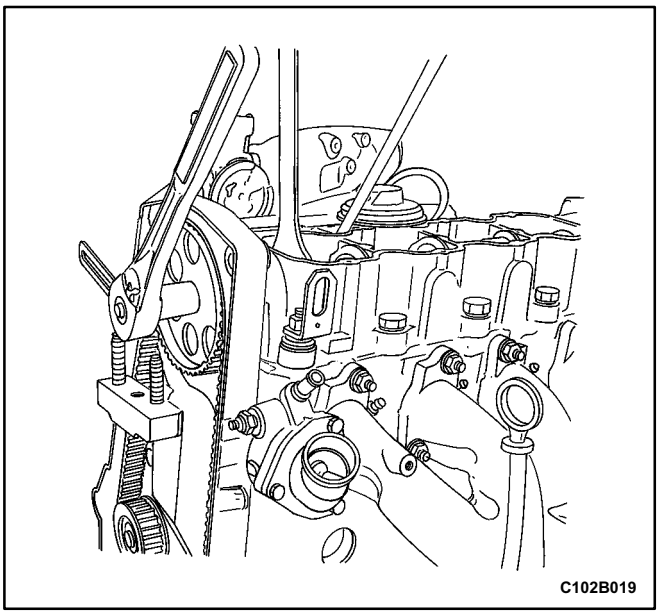

25. Install the camshaft gear by counterholding on the hex of the camshaft with an open-ended wrench.
26. Install the camshaft gear with a new bolt to the camshaft.

Tighten

Tighten the camshaft gear retaining bolt to 45 N•m (33 lb•ft).

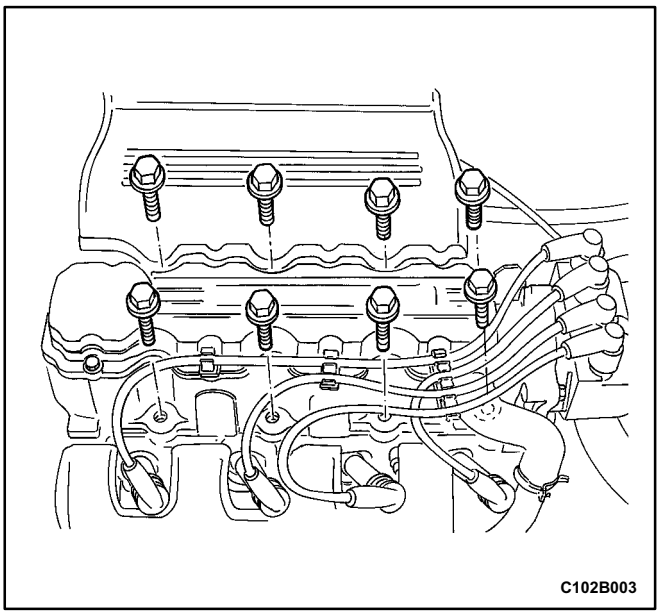

27. Install the valve cover and the valve cover gasket.
28. Install the valve cover bolts.

Tighten

Tighten the valve cover bolts to 8 N•m (71 lb•in).

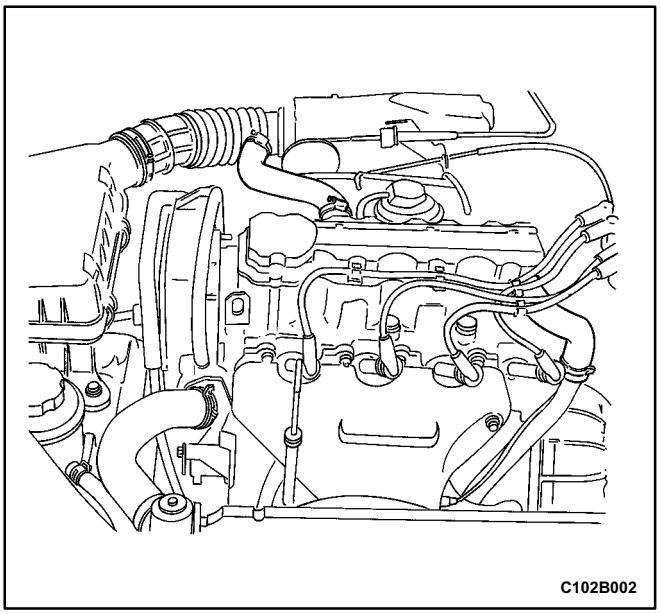

29. Connect the ignition wires to the spark plugs.
30. Connect the breather tubes to the valve cover.

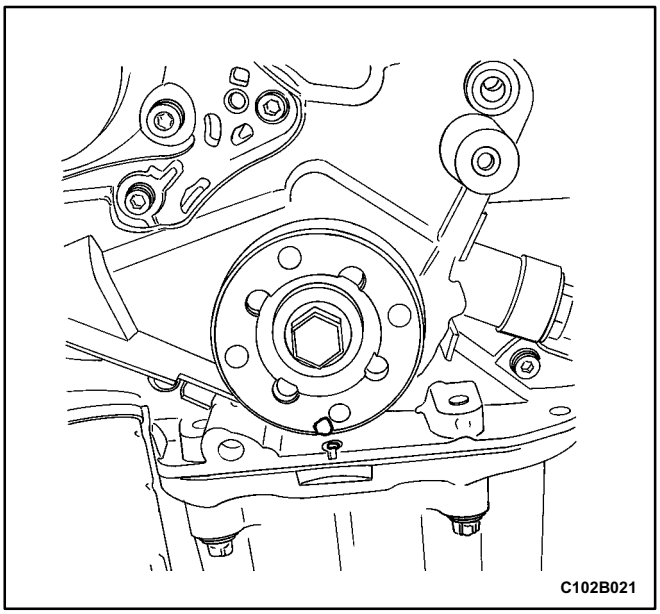

31. Align the mark on the crankshaft gear with the notch at the bottom of the rear timing belt cover.
32. Install the timing belt. Refer to "Timing Belt" in this section.
33. Check and adjust the timing belt tension. Refer to "Timing Belt Check and Adjust" in this section.
34. Route the crankshaft position wire into its track.

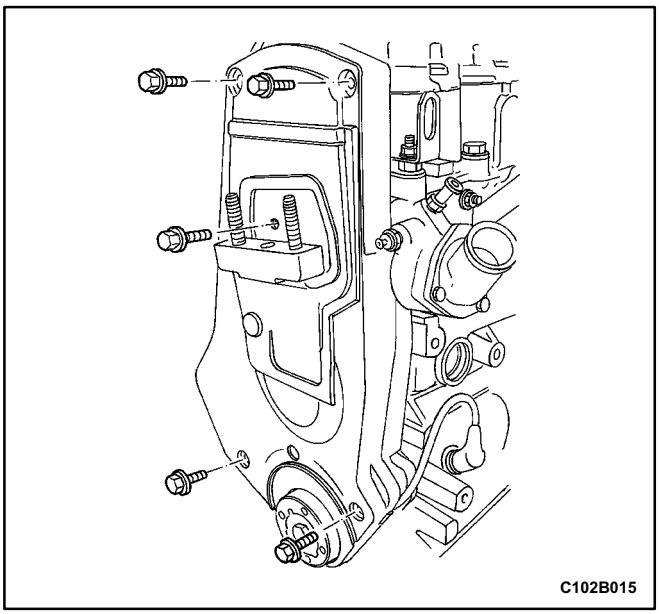

35. Install the front timing belt cover.
36. Install the front timing belt cover bolts.

Tighten

Tighten the front timing belt cover bolts to 6 N•m (53 lb•in).

37. Install the crankshaft pulley.
38. Install the crankshaft pulley bolts.

Tighten

Tighten the crankshaft pulley bolts to 20 N•m (15 lb•ft).

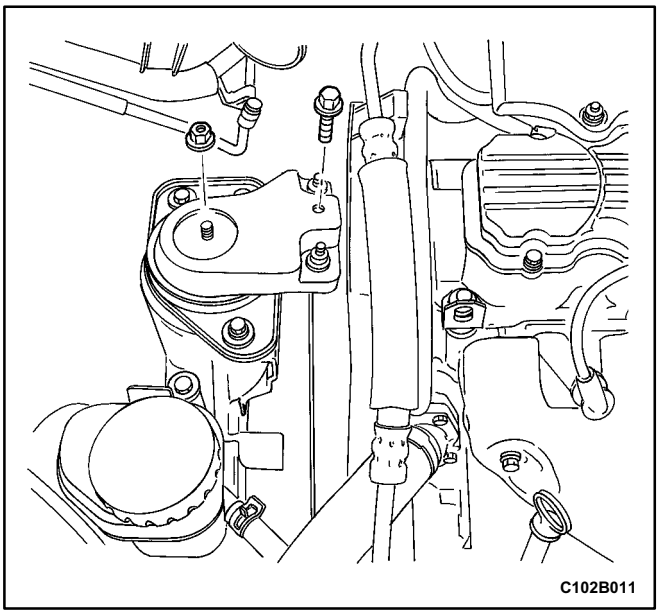

39. Install the right side engine mount bracket and retaining bolts/nuts.

Tighten

Tighten the right side engine mount bracket retaining bolts/nuts to 60 N•m (44 lb•ft).

40. Remove the floor jack.
41. Install the serpentine accessory drive belt. Refer to *Section 6B, Power Steering Pump.*
42. Connect the upper radiator hose to the thermostat housing.
43. Install the right front wheel well splash shield. Refer to *Section 9R, Body Front End.*
44. Install the right front wheel. Refer to *Section 2E, Tires and Wheels*.

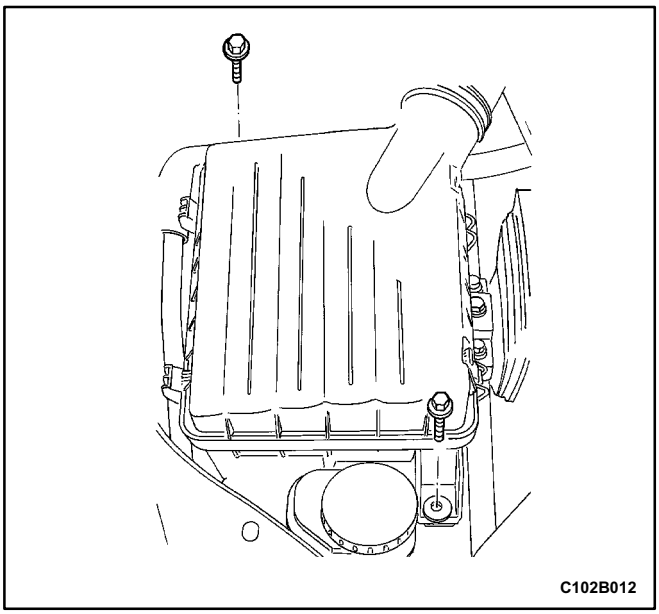

45. Install the air filter housing.
46. Install the air filter housing bolts.

Tighten

Tighten the air filter housing bolts to 8 N•m (71 lb•in).

47. Connect the air intake tube to the throttle body.
48. Connect the breather tubes to the air intake tube.
49. Connect the manifold air temperature sensor connector.
50. Install the resonator and retaining bolts.

Tighten

Tighten the resonator retaining bolts to 8 N•m (71 lb•in).

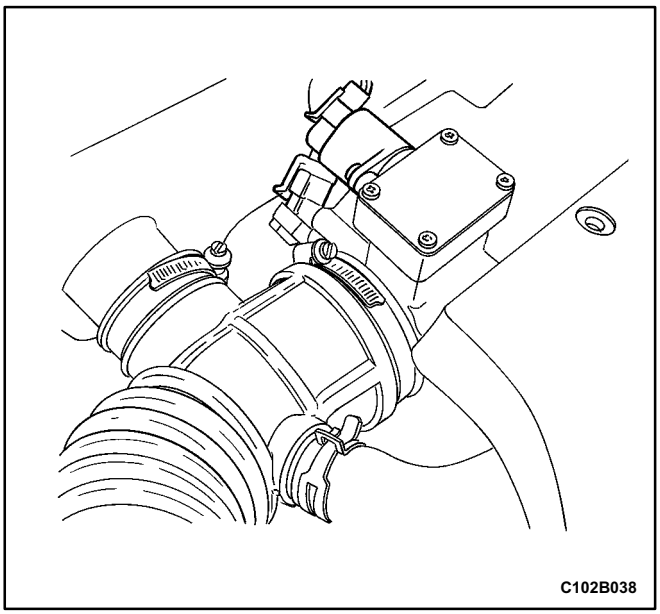

51. Connect the coolant temperature sensor connector.
52. Connect the engine coolant temperature sensor connector.
53. Connect the idle air control valve connector.
54. Connect the throttle position sensor connector.
55. Install the injector cover and retaining bolts.

Tighten

Tighten the injector cover retaining bolts to 8 N•m (71 lb•in).

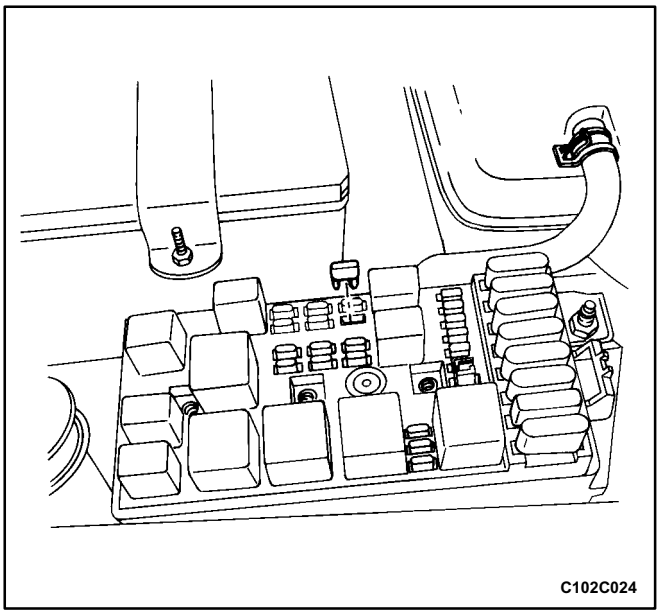

56. Connect the DIS ignition coil connector.
57. Connect the oxygen sensor connector.
58. Connect the ECM ground terminal.
59. Install the fuel pump fuse.
60. Connect the negative battery ground cable.
61. Refill the engine cooling system. Refer to *Section 1D, Engine Cooling*.

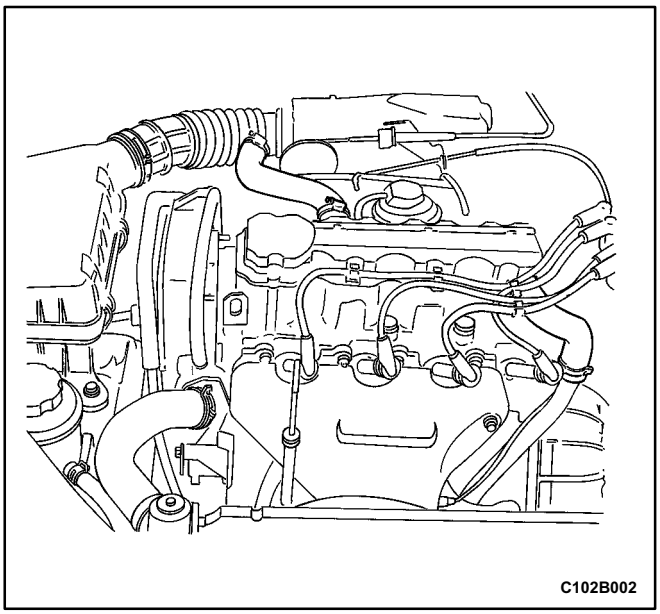

CAMSHAFT

Tools Required

KM-565-A Valve Spring Compressor

Removal Procedure

1. Remove the timing belt. Refer to Timing Belt" in this section.
2. Disconnect the breather tubes at the valve cover.

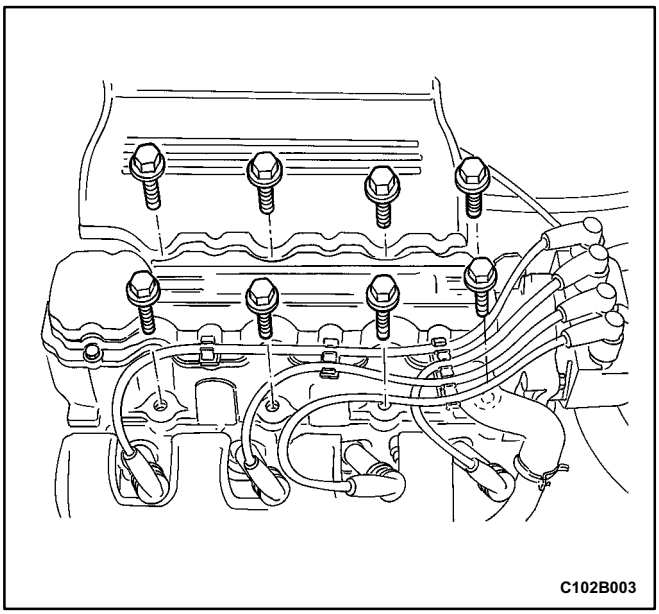

3. Remover the injector cover bolts.
4. Remover the injector cover.
5. Remove the valve cover bolts.
6. Remove the valve cover and the gasket.

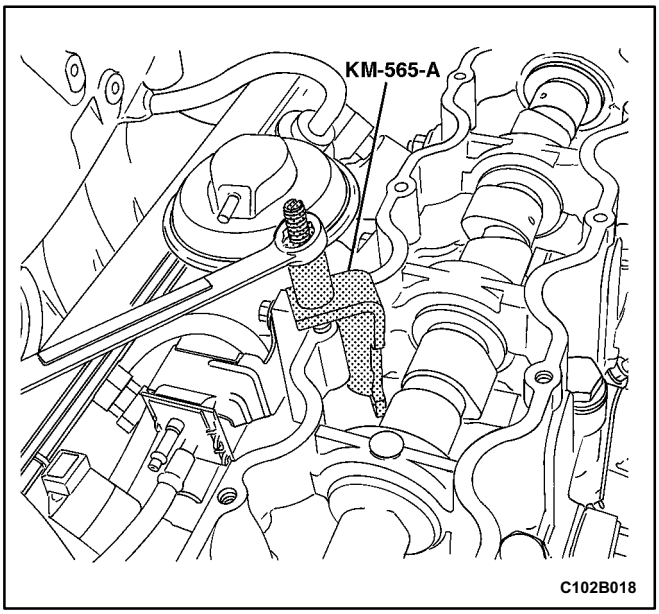

7. Install the valve spring compressor KM-565-A.

Notice: Take extreme care to prevent any scratches, nicks, or damage to the camshaft. Such damage can cause premature engine wear.

8. Remove the camshaft followers using the valve spring compressor KM-565-A.

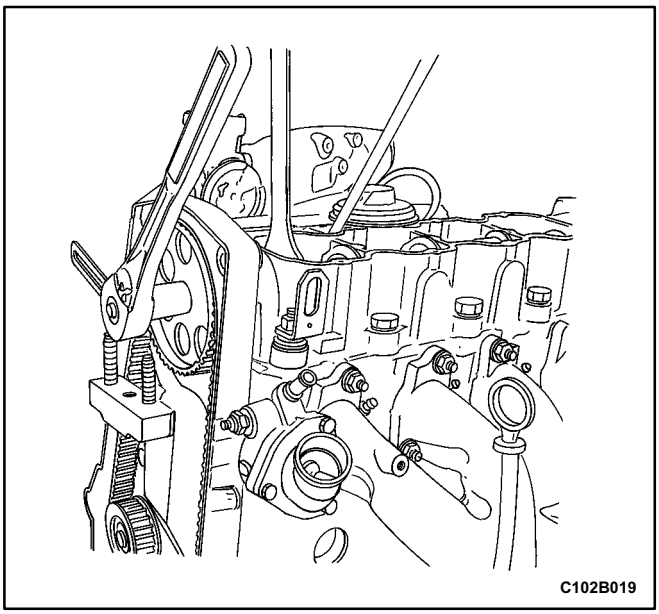

9. While holding the camshaft firmly in place, remove the camshaft gear bolt.
10. Remove the camshaft gear.

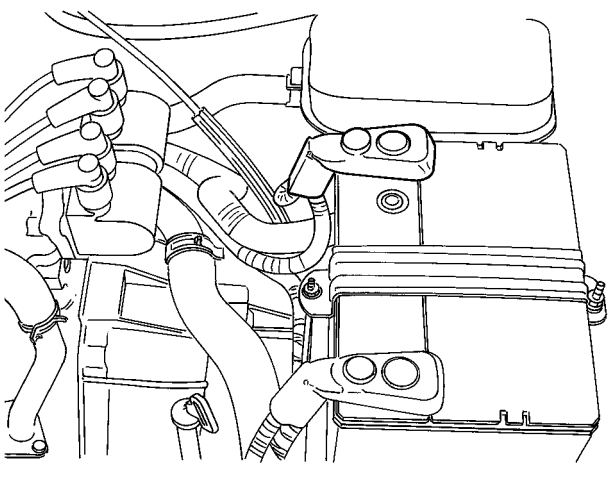

11. Remove the power steering pressure hose clamp bolt. Move the hose out of the way.
12. Disconnect the positive battery cable.
13. Remove the battery and the battery tray. Refer to *Section 1E, Engine Electrical*.

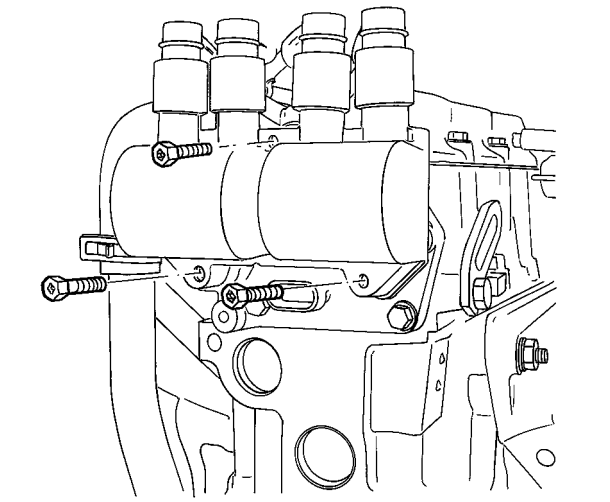

14. Disconnect the DIS ignition coil connector.
15. Disconnect the ignition wires at the DIS ignition coil.
16. Remove the DIS ignition coil mounting bolts.
17. Remove the DIS ignition coil.

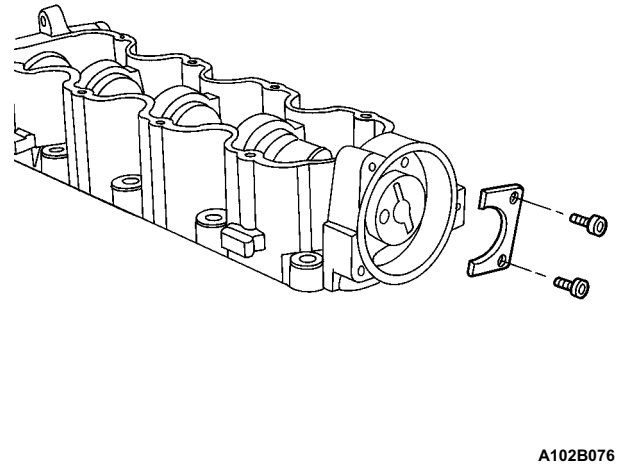

18. Remove the DIS ignition coil mounting plate bolts.
19. Remove the DIS ignition coil mounting plate.
20. Remove the camshaft pressure plate bolts.
21. Remove the camshaft pressure plate.

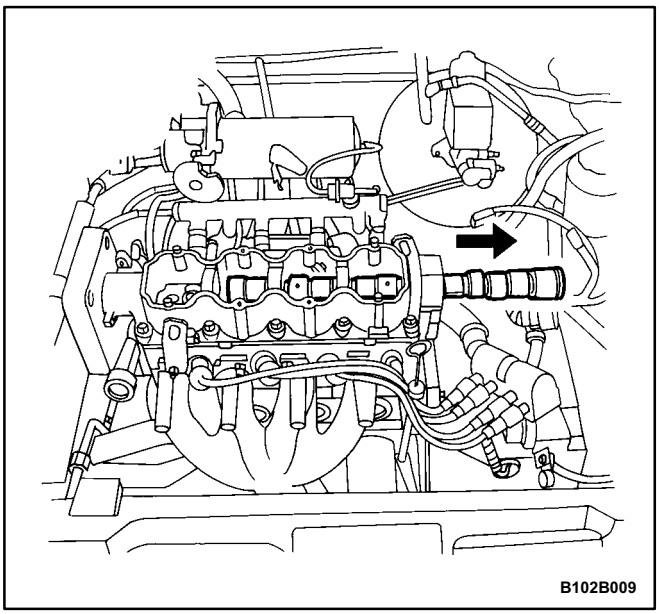

22. Remove the camshaft.

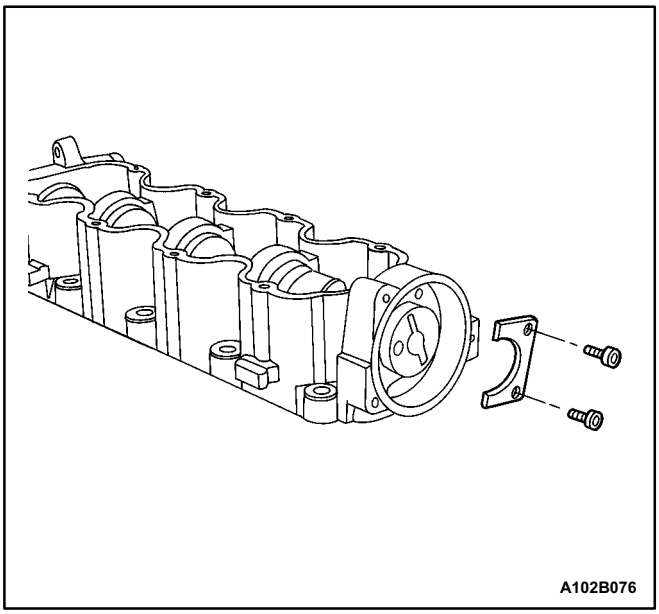

Installation Procedure

1. Install the camshaft.
2. Install the camshaft pressure plate.
3. Install the camshaft pressure plate bolts.

Tighten

Tighten the camshaft pressure plate bolts to 10 N•m (89 lb•in).

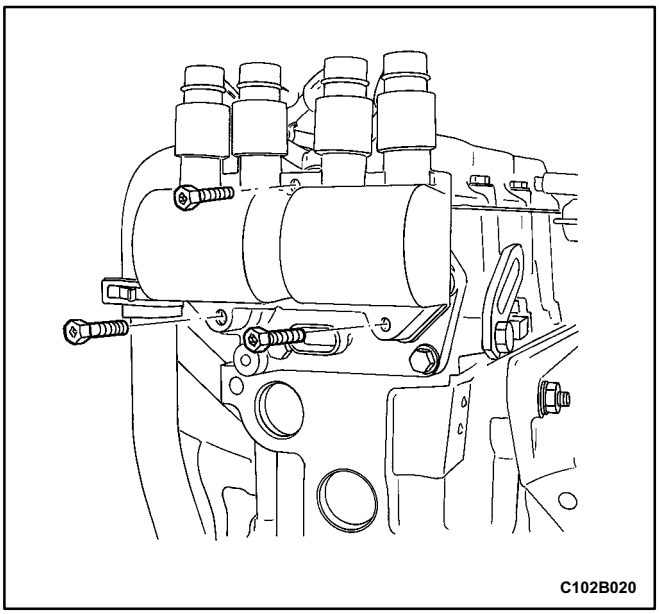

4. Measure the camshaft end play. The camshaft end play should be 0.04 to 0.16 mm (0.016 to 0.64 inch).
5. Install the DIS ignition coil mounting plate.
6. Install the DIS ignition coil mounting plate bolts.

Tighten

Tighten the DIS ignition coil mounting plate bolts to 10 N•m (89 lb•in).

7. Install the DIS ignition coil.
8. Install the DIS ignition coil retaining bolts.

Tighten

Tighten the DIS ignition coil retaining bolts to 10 N•m (89 lb•in).

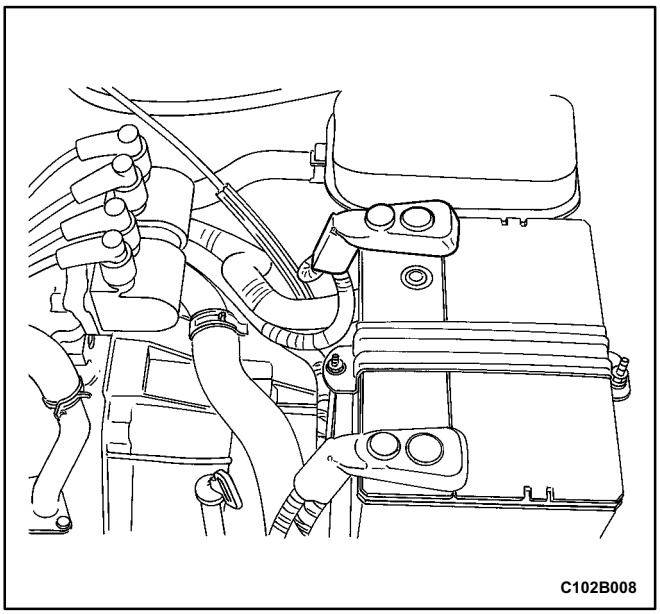

9. Connect the ignition wires at the DIS ignition coil.
10. Connect the DIS ignition coil connector.
11. Install the battery and the battery tray. Refer to *Section 1E, Engine Electrical.*
12. Connect the positive battery cable.

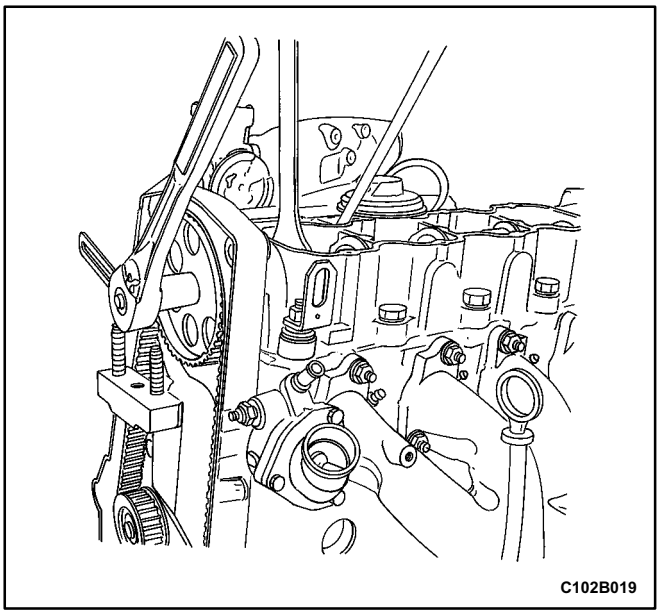

Notice: Take extreme care to prevent any scratches, nicks, or damage to the camshaft. Such damage can cause premature engine wear.

13. Install the camshaft gear.
14. While holding the camshaft firmly in place, install the camshaft gear retaining bolt.

Tighten

Tighten the camshaft gear retaining bolt to 45 N•m (33 lb•ft).

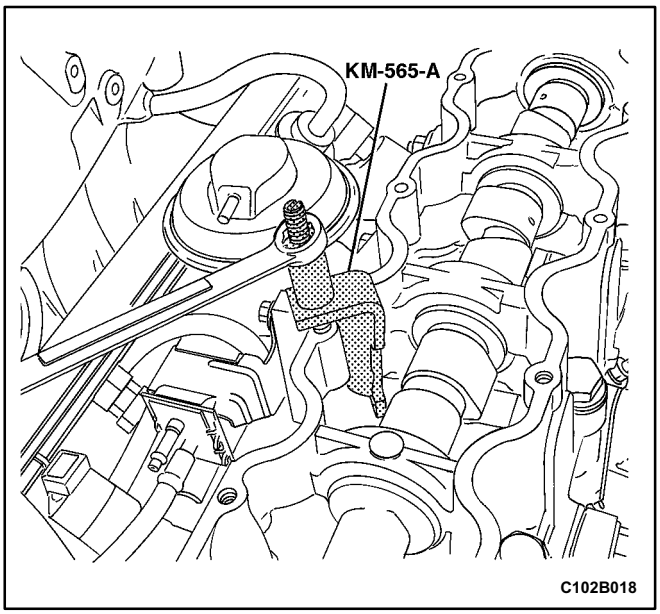

15. Install the camshaft followers using the valve spring compressor KM-565-A.
16. Remove the valve spring compressor KM-565-A.

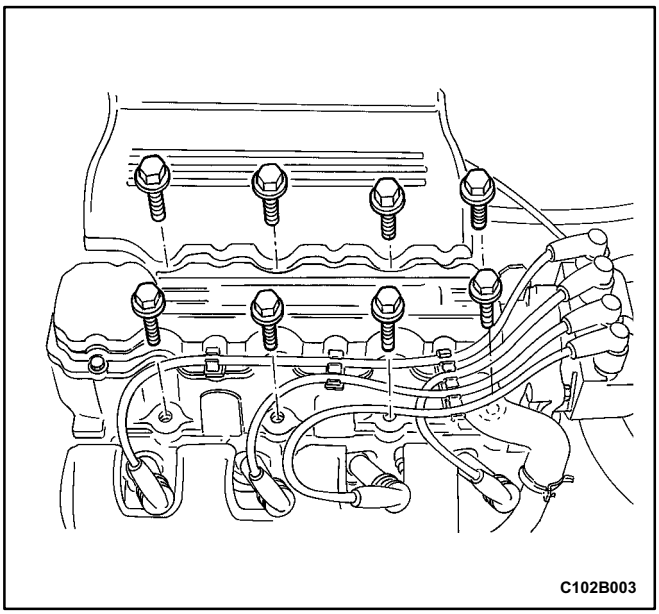

17. Install the valve cover gasket.
18. Install the valve cover.
19. Install the valve cover bolts.

Tighten

Tighten the valve cover bolts to 8 N•m (71 lb•in).

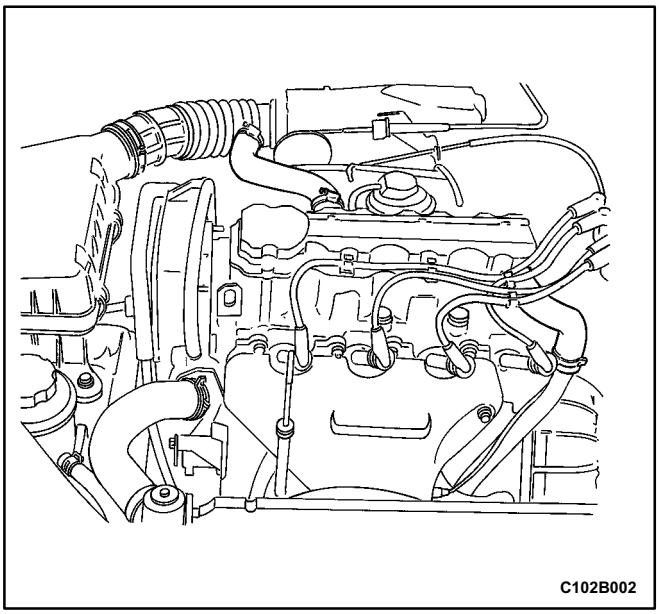

20. Connect the breather tubes to the valve cover.
21. Install the injector cover.
22. Install the injector cover bolts.

Tighten

Tighten the injector cover bolts to 8 N•m (71 lb•in).

23. Install the power steering pressure hose clamp bolt.

Tighten

Tighten the power steering pressure hose clamp bolt to 10 N•m (89 lb•in).

24. Install the timing belt. Refer to "Timing Belt" in this section.

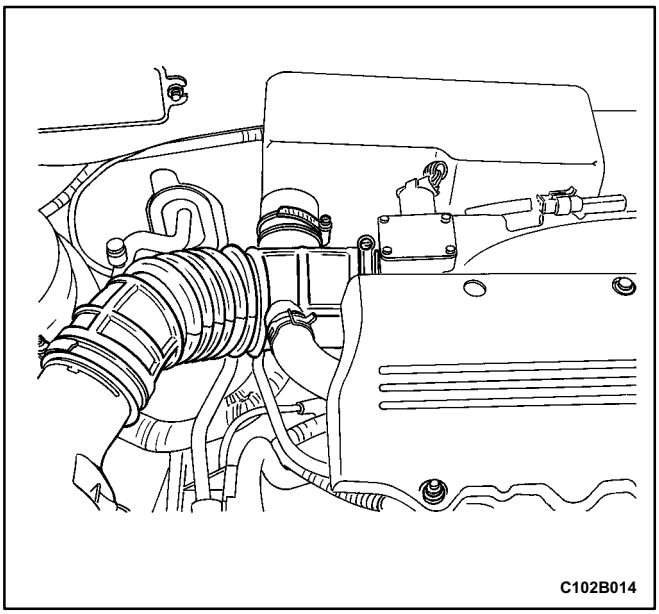

TIMING BELT CHECK AND ADJUST

Adjustment Procedure

1. Disconnect the negative battery cable.
2. Remove the air intake tube.
3. Disconnect the breather tube.
4. Remove the power steering hose clamp bolt and position the hose clear.

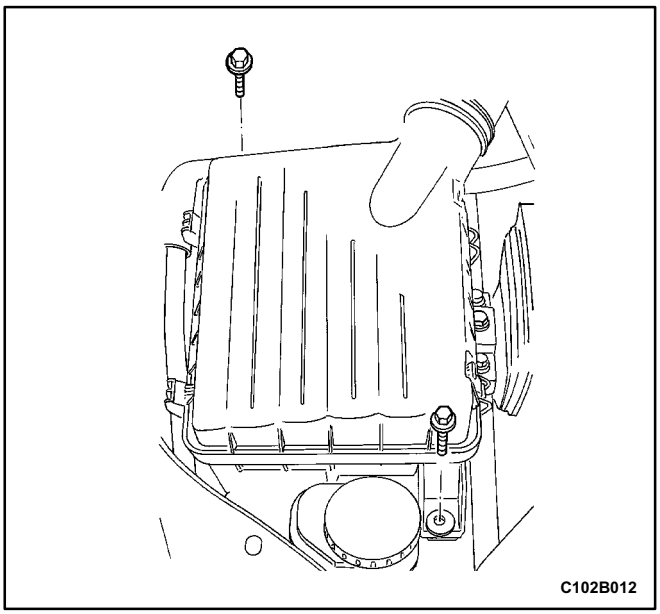

5. Remove the air filter housing bolts.
6. Remove the air filter housing.
7. Remove the right front wheel. Refer to *Section 2E, Tires and Wheels.*
8. Remove the right front wheel well splash shield. Refer to *Section 9R, Body Front End*.

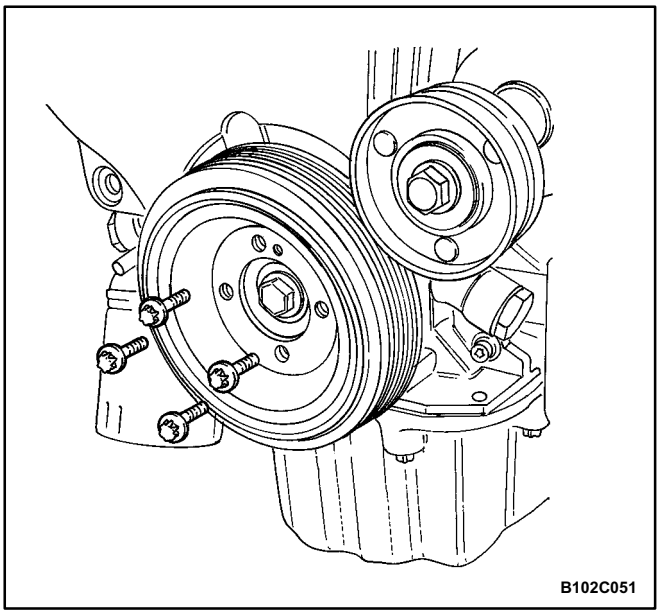

9. Remove the serpentine accessory drive belt. Refer to *Section 6B, Power Steering Pump.*
10. Remove the crankshaft pulley bolts.
11. Remove the crankshaft pulley.
12. Remove the right side engine mount bracket. Refer to ``Engine Mount, Right Side'' in this section.

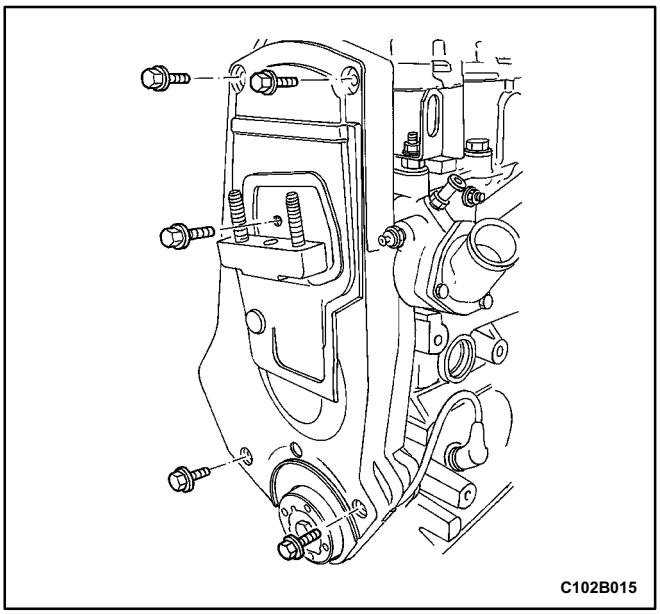

13. Remove the front timing belt cover bolts.
14. Remove the front timing belt cover.

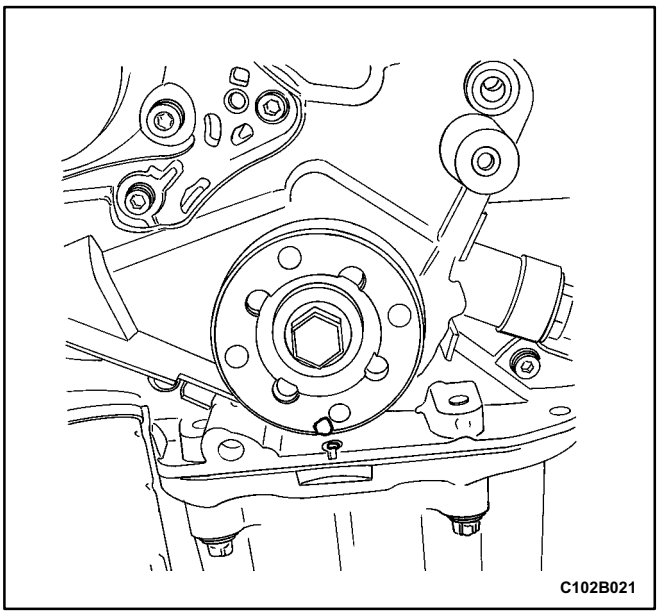

15. Rotate the crankshaft at least one full turn clockwise using the crankshaft gear bolt.
16. Align the mark on the crankshaft gear with the notch at the base of the oil pump.

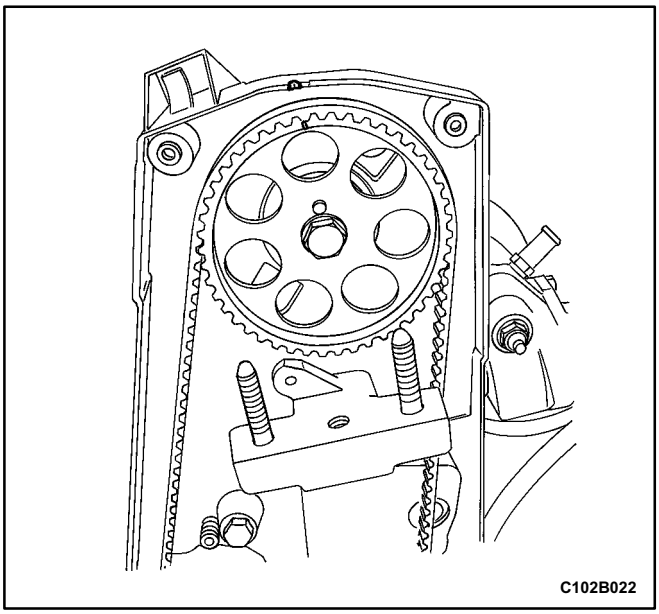

17. Align the camshaft gear timing mark to the notch on the timing belt cover.

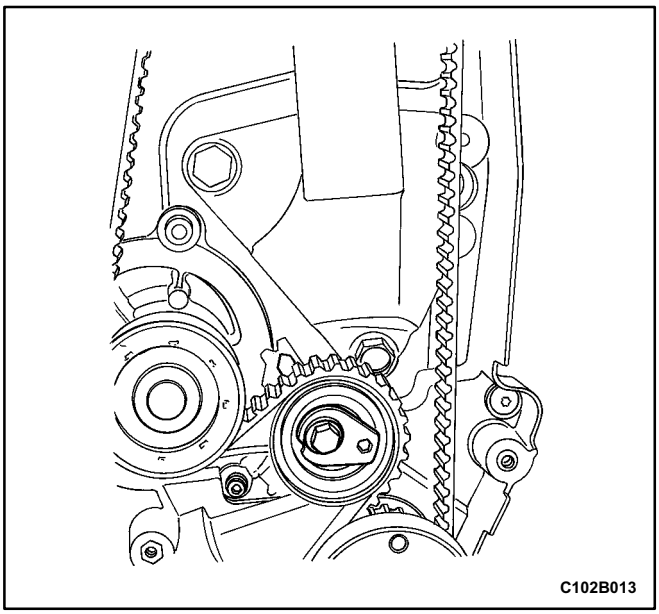

18. Loosen the automatic tensioner bolt. To relieve the belt tension, turn the hex-key tab counterclockwise.
19. Rotate the automatic tensioner hex-key tab clockwise until the adjust arm pointer of the timing belt automatic tensioner is aligned with the notch in the timing belt automatic tensioner bracket.

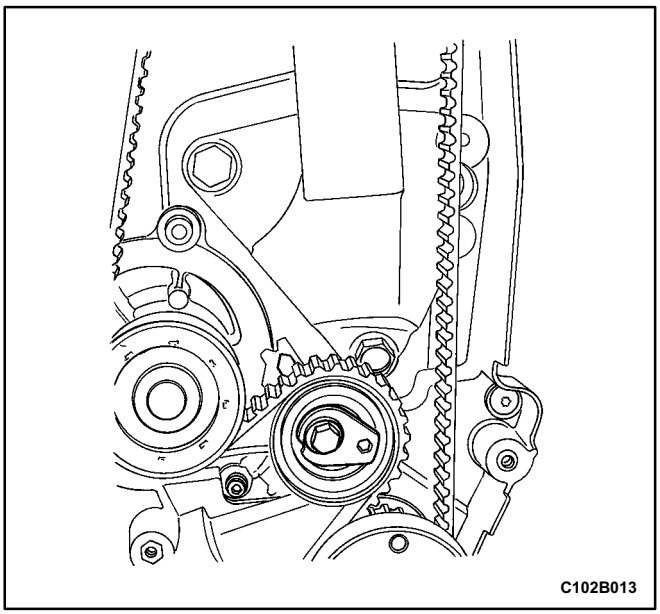

20. Tighten the automatic tensioner bolt.
21. Rotate the crankshaft two full turns clockwise using the crankshaft gear bolt.
22. Check the automatic tensioner pointer.
23. When the adjust arm pointer of the timing belt automatic tensioner is aligned with the notch on the timing belt automatic tensioner bracket, the belt is tensioned correctly.

Tighten

Tighten the timing belt automatic tensioner bolt to 25 N•m (18 lb•ft).

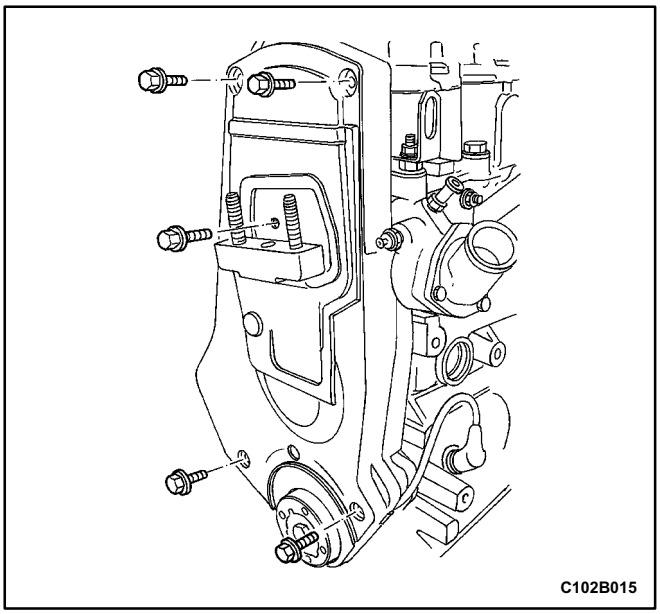

24. Install the front timing belt cover.
25. Install the front timing belt cover bolts.

Tighten

Tighten the front timing belt cover bolts to 6 N•m (53 lb•in).

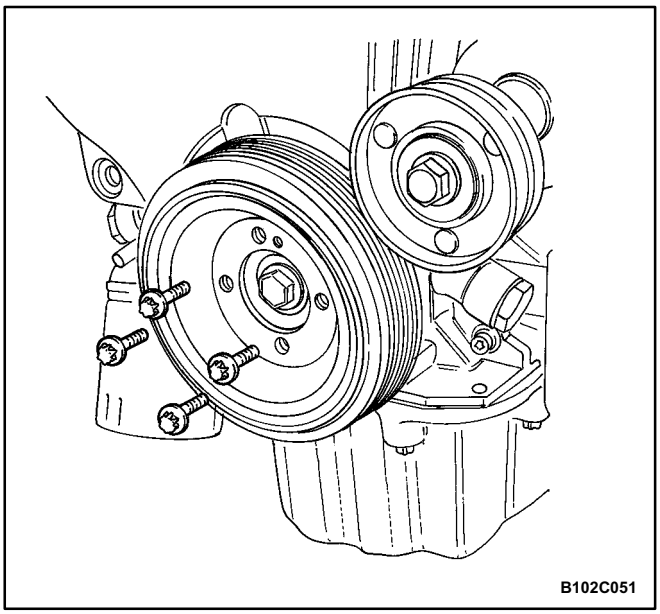

26. Install the crankshaft pulley.
27. Install the crankshaft pulley bolts.

Tighten

Tighten the crankshaft pulley bolts to 20 N•m (15 lb•ft).

28. Install the right side engine mount bracket. Refer to "Engine Mount, Right Side" in this section.
29. Install the serpentine accessory drive belt. Refer to *Section 6B, Power Steering Pump*.

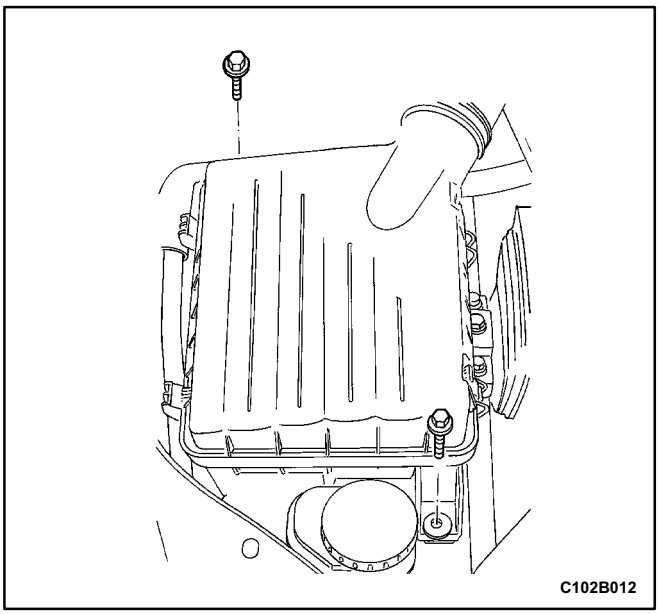

30 Install the right front wheel well splash shield. Refer to *Section 9R, Body Front End*.

31. Install the right front wheel. Refer to *Section 2E, Body Front End.*

32. Install the air filter housing.

33 Install the air filter housing bolts.

Tighten

Tighten the air filter housing bolts to 8 N•m (71 lb•in).

34. Connect the air intake tube.

35. Install the power steering hose clamp bolt.

Tighten

Tighten the power steering pressure hose clamp bolt to 10 N•m (89 lb•in).

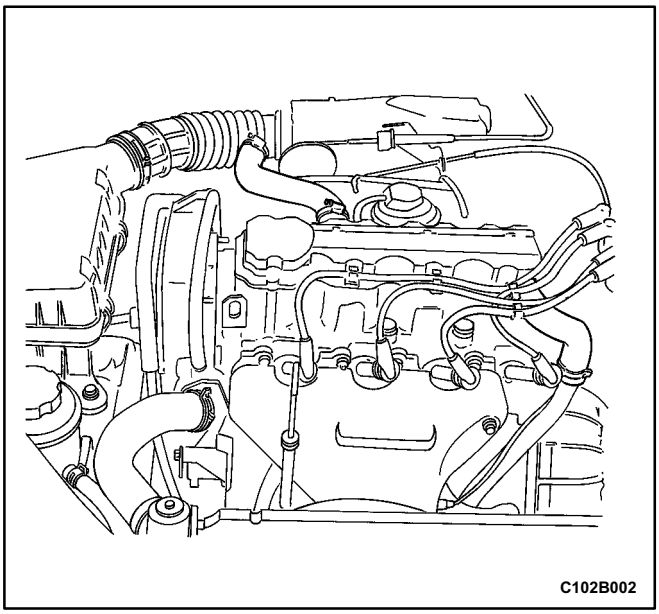

36. Connect the breather tube.

37. Connect the negative battery cable.

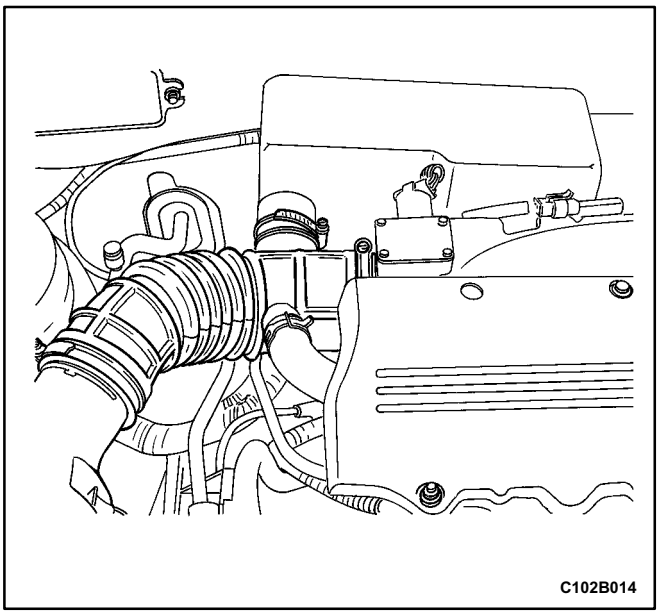

TIMING BELT

Removal Procedure

1. Disconnect the negative battery cable.
2. Disconnect the air intake tube from the throttle body.
3. Disconnect the breather tubes from the valve cover.
4. Remove the power steering hose clamp bolt.

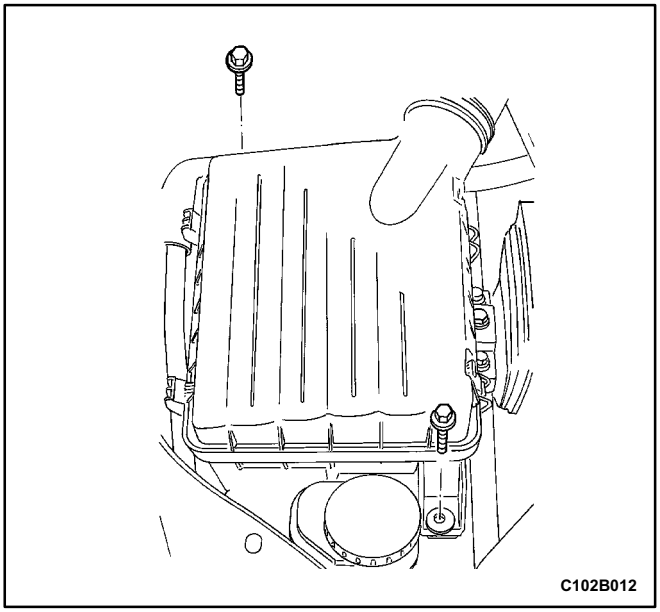

5. Remove the air filter housing bolts.
6. Remove the air filter housing.
7. Remove the right front wheel. Refer to *Section 2E, Tires and Wheels.*
8. Remove the right front wheel well splash shield. Refer to *Section 9R, Body Front End*.

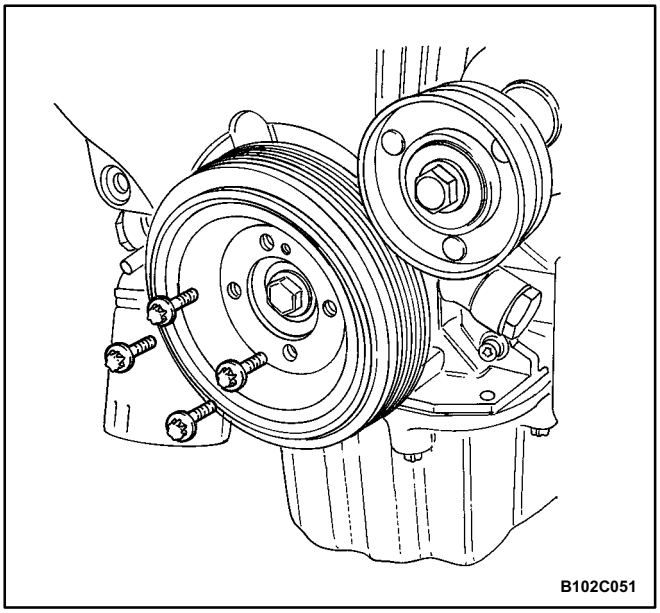

9. Remove the serpentine accessory drive belt. Refer to *Section 6B, Power Steering Pump*.
10. Remove the crankshaft pulley bolts.
11. Remove the crankshaft pulley.
12. Remove the right side engine mount bracket. Refer to "Engine Mount, Right Side" in this section.

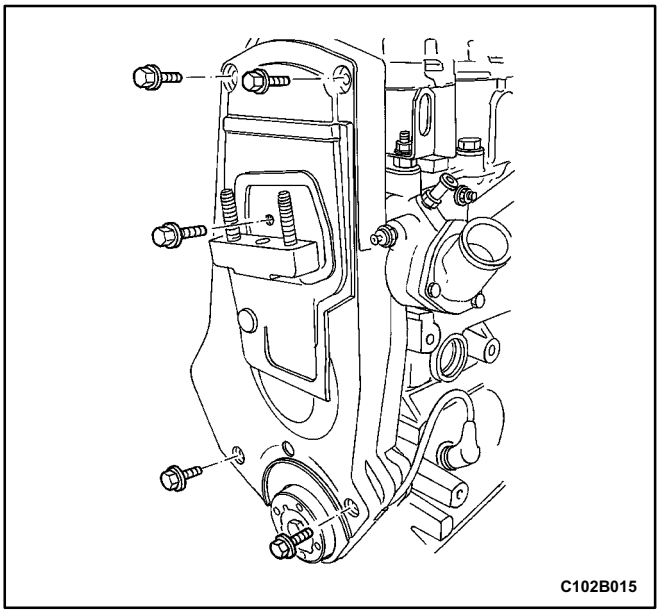

13. Remove the front timing belt cover bolts.
14. Remove the front timing belt cover.

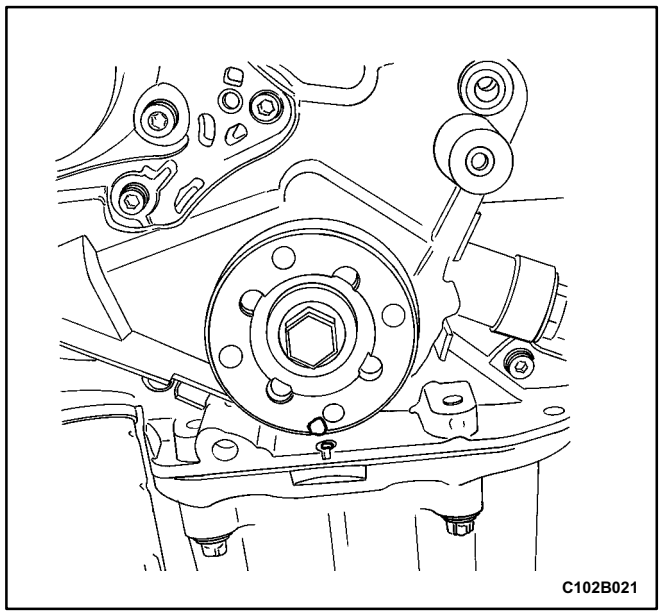

15. Using the crankshaft gear bolt, rotate the crankshaft clockwise until the timing mark on the crankshaft gear is aligned with the notch at the base of the oil pump.

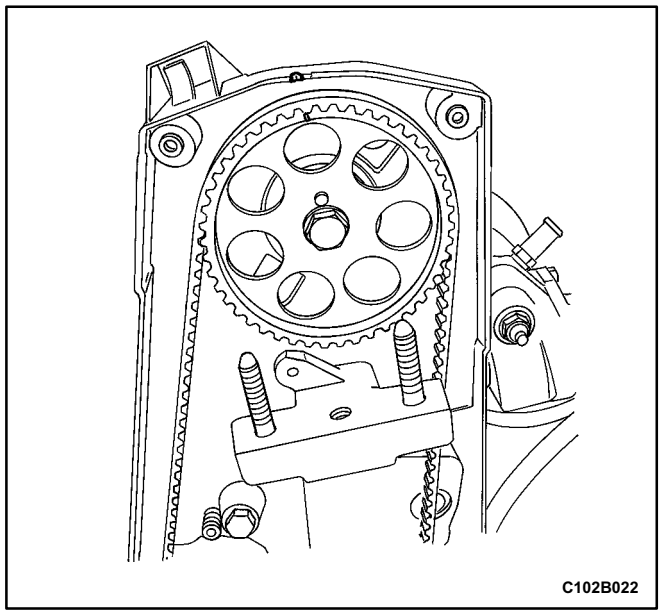

Notice: The camshaft gear must align with the notch on the timing belt cover or damage to the engine could result.

16. Align the camshaft gear with the notch on the timing belt cover.

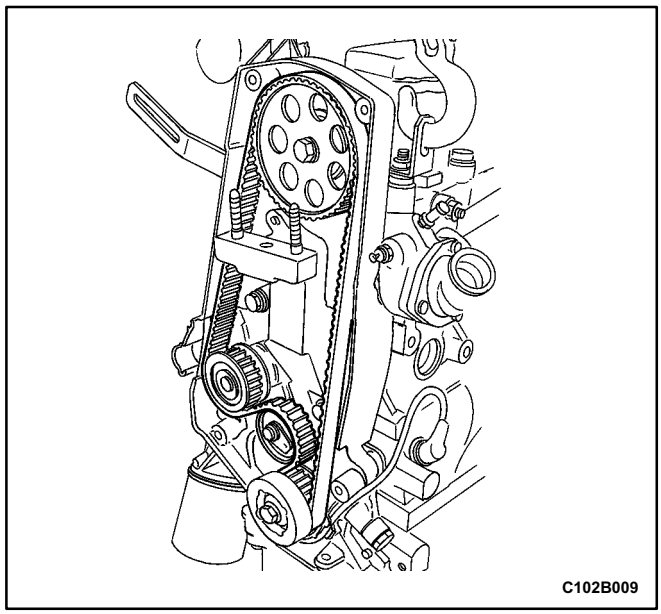

17. Loosen the timing belt automatic tensioner bolt. Turn the hex-key tab to relieve belt tension.
18. Remove the timing belt.

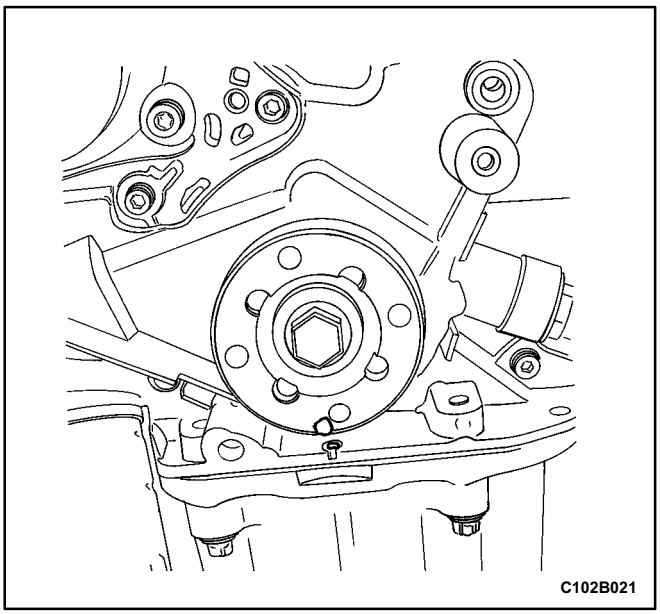

Installation Procedure

1. Align the timing mark on the crankshaft gear with the notch on the base of the oil pump.

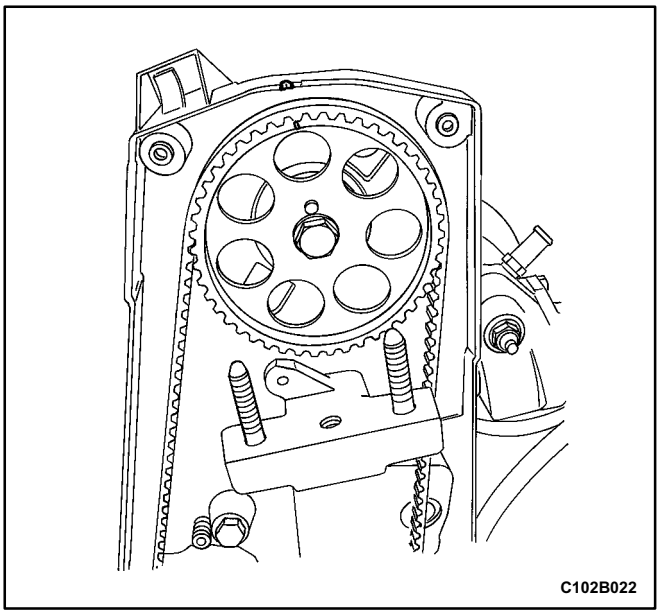

2. Align the timing mark on the camshaft gear to the notch on the timing belt cover.

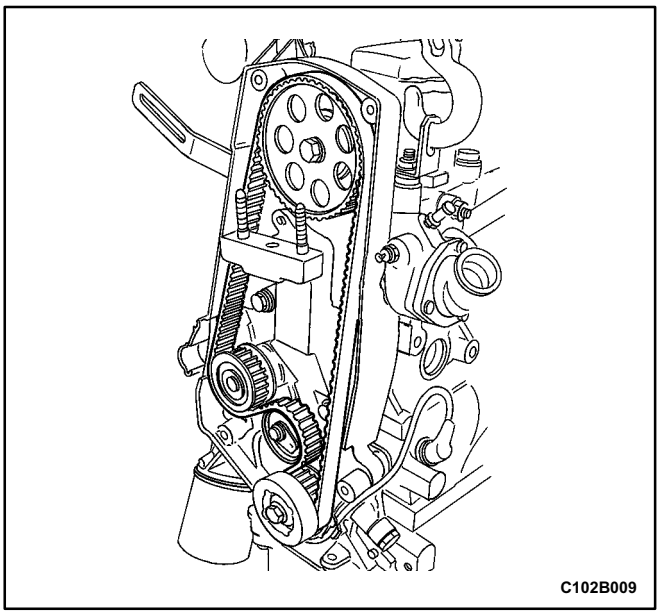

3. Install the timing belt.

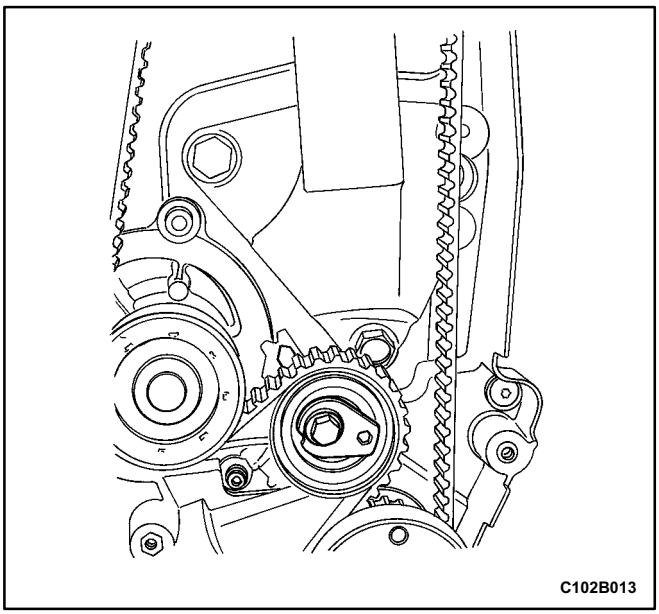

4. Turn the tensioner hex-key tab in a clockwise direction to tension the belt. Turn until the pointer aligns with the notch.
5. Tighten the timing belt automatic tensioner bolt.
6. Rotate the crankshaft two full turns clockwise using the crankshaft pulley bolt.
7. Recheck the automatic tensioner pointer. If the pointer aligns with the notch, retighten the automatic tensioner bolt.

Tighten

Tighten the timing belt automatic tensioner bolt to 25 N•m (18 lb•ft).

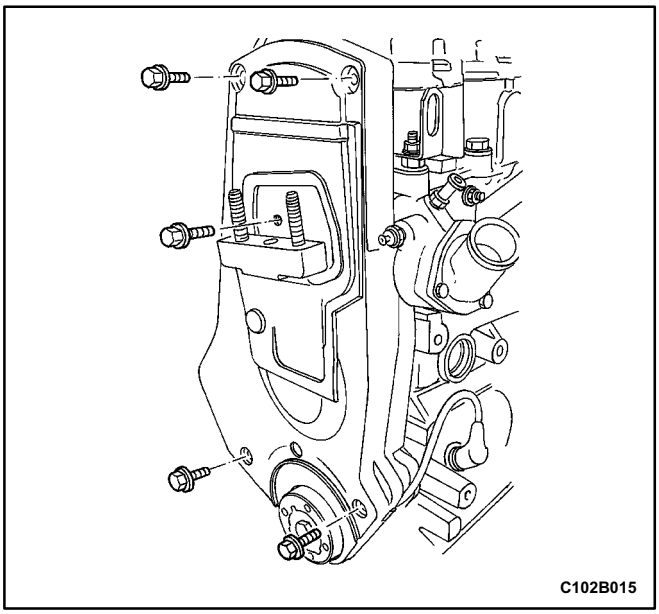

8. Install the front timing belt cover.
9. Install the front timing belt cover bolts.

Tighten

Tighten the front timing belt cover bolts to 6 N•m (53 lb•in).

10. Install the right engine mount bracket. Refer to "Engine Mount, Right Side" in this section.

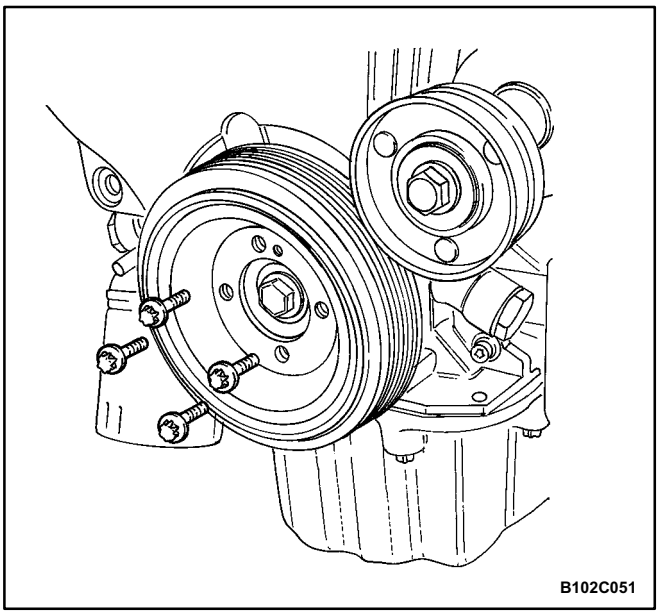

11. Install the crankshaft pulley
12. Install the crankshaft pulley bolts.

Tighten

Tighten the crankshaft pulley bolts to 20 N•m (15 lb•ft).

13. Install the power steering hose clamp bolt.

Tighten

Tighten the power steering pressure hose clamp bolt to 10 N•m (89 lb•in).

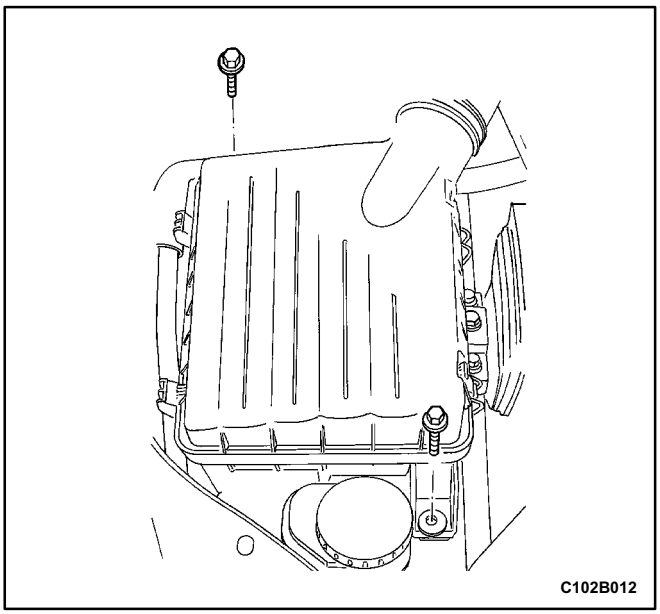

14. Install the serpentine accessory drive belt. Refer to *Section 6B, Power Steering Pump*.
15. Install the right front wheel well splash shield. Refer to *Section 9R, Body Front End*.
16. Install the right front wheel. Refer to *Section 2E, Tires and Wheels*.
17. Install the air filter housing.
18. Install the air filter housing bolts.

Tighten

Tighten the air filter housing bolts to 8 N•m (71 lb•in).

19. Connect the air intake tube to the throttle body.
20. Connect the breather tubes to the valve cover.
21. Connect the negative battery cable.

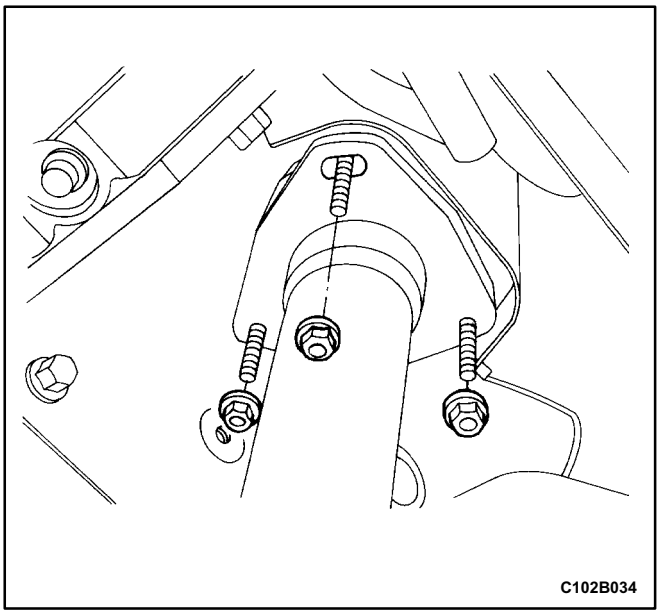

OIL PAN

Removal Procedure

1. Disconnect the negative battery cable.
2. Drain the engine oil from the engine crankcase.
3. Remove the exhaust flex pipe retaining nuts from the exhaust manifold.
4. Remove the exhaust flex pipe retaining nuts from the catalytic converter.
5. Remove the exhaust flex pipe.
6. Remove the center member. Refer to *Section 9N, Frame and Underbody*.

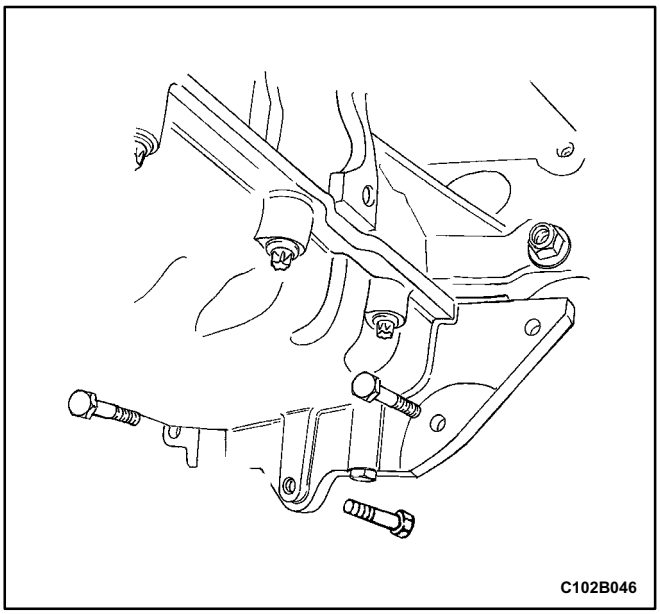

7. Remove the oil pan flange-to-transaxle retaining bolts.

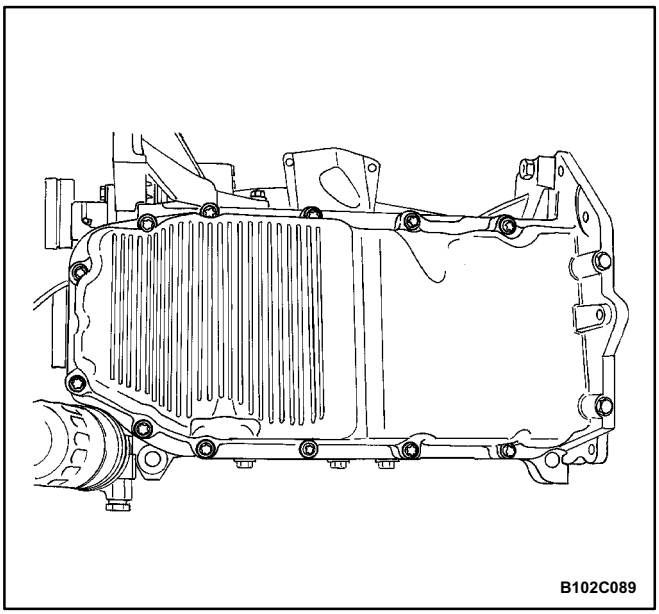

8. Remove the oil pan retaining bolts.
9. Remove the oil pan from the engine block.
10. Remove the oil pan gasket from the oil pan.

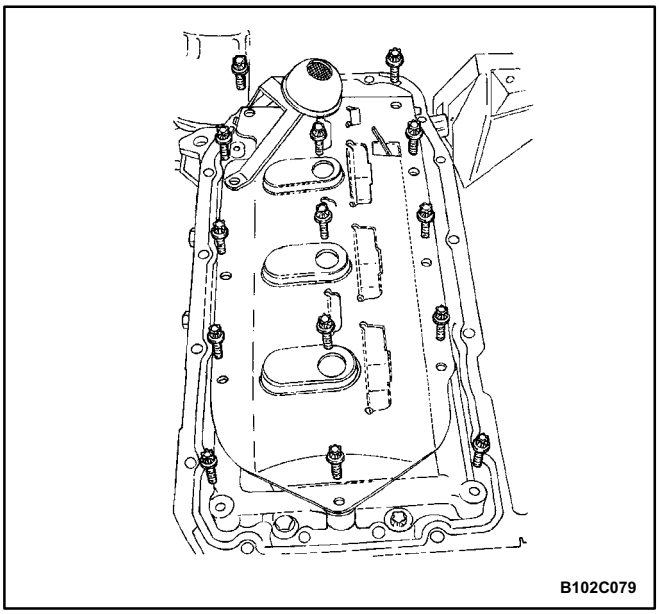

Cleaning Procedure

1. Clean the oil pan sealing surface.
2. Clean the engine block sealing surface.
3. Clean the oil pan retaining bolts.
4. Clean the oil pan retaining bolt holes in the engine block.
5. Clean the oil pan splash shield.

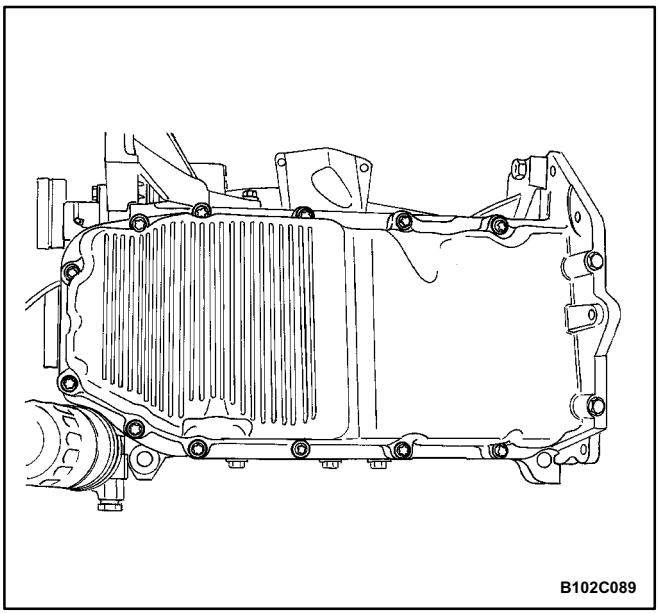

Installation Procedure

1. Coat the new oil pan gasket with sealant.
2. Install the oil pan gasket to the oil pan.
3. Install the oil pan to the engine block.
4. Install the oil pan retaining bolts.

Tighten

Tighten the oil pan retaining bolts to 10 N•m (89 lb•in).

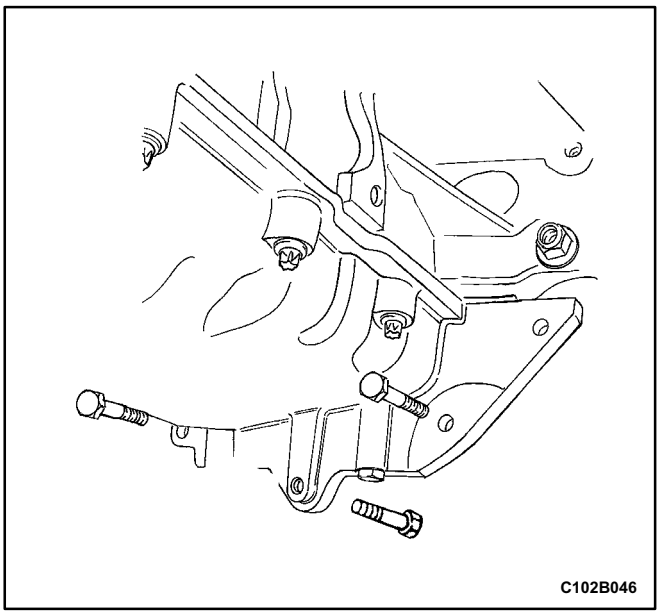

5. Install the oil pan flange-to-transaxle retaining bolts.

Tighten

Tighten the oil pan flange-to-transaxle retaining bolts to 40 N•m (30 lb•ft).

6. Install the center member. Refer to *Section 9N, Frame and Underbody*.

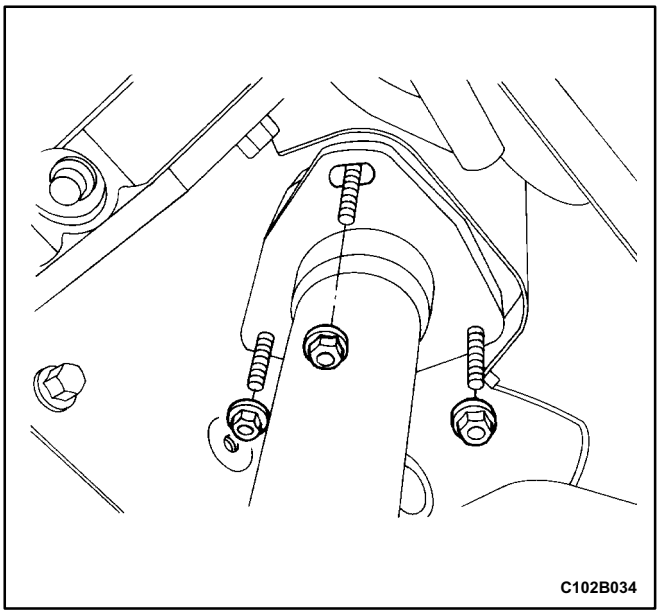

7. Install the exhaust flex pipe.
8. Install the exhaust flex pipe retaining nuts to the exhaust manifold.

Tighten

Tighten the exhaust flex pipe-to-exhaust manifold retaining nuts to 22 N•m (16 lb•ft).

9. Install the exhaust flex pipe retaining nuts to the catalytic converter.

Tighten

Tighten the exhaust flex pipe-to-catalytic converter retaining nuts to 30 N•m (22 lb•ft).

10. Connect the negative battery cable.
11. Refill the engine crankcase with engine oil.

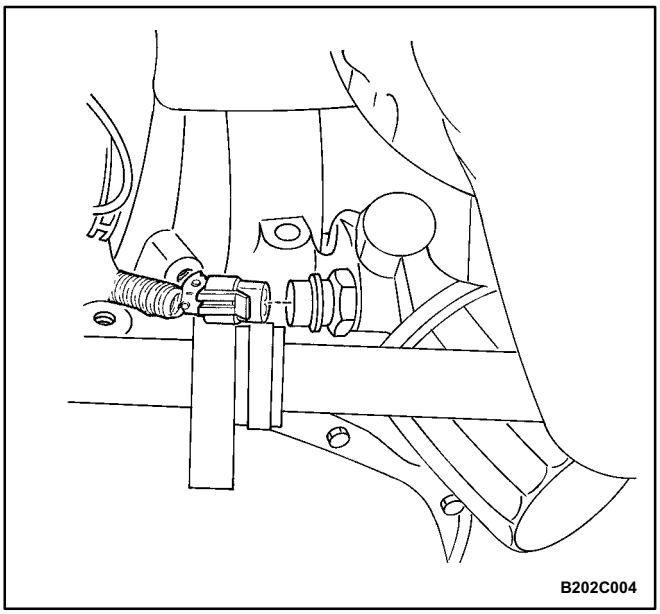

OIL PUMP

Tools Required

KM-498-B Pressure Gauge

KM-135 Adapter

Engine Oil Pressure Inspection Procedure

1. Remove the front right wheel well splash shield. Refer to *Section 9R, Body Front End*.
2. Remove the oil pressure switch connector.

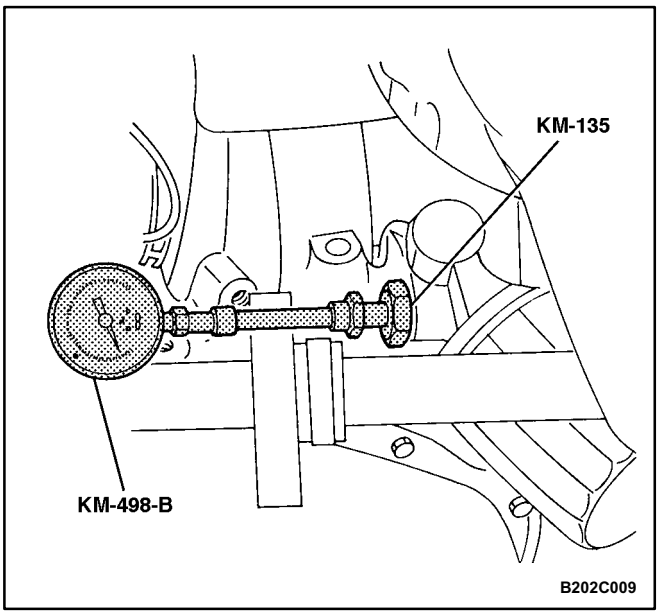

3. Install the adapter KM-135 in place of the oil pressure switch.
4. Connect the pressure gauge KM-498-B to the adapter.
5. Start the engine and check the oil pressure at idle speed and an engine temperature of 80°C (176°F). The minimum oil pressure should be 30 kPa (0.3 bar).
6. Stop the engine and remove the oil pressure gauge KM-498-B and the adapter KM-135.

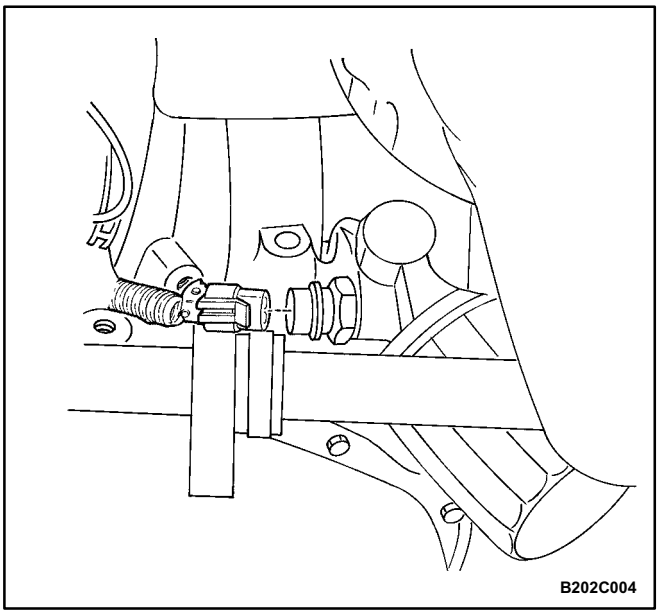

7. Install the oil pressure switch.

Tighten

Tighten the oil pressure switch to 40 N•m (30 lb•ft).

8. Connect the electrical connector to the oil pressure switch.
9. Install the front right wheel well splash shield. Refer to *Section 9R, Body Front End*.
10. Check the oil level and add oil to the full mark.

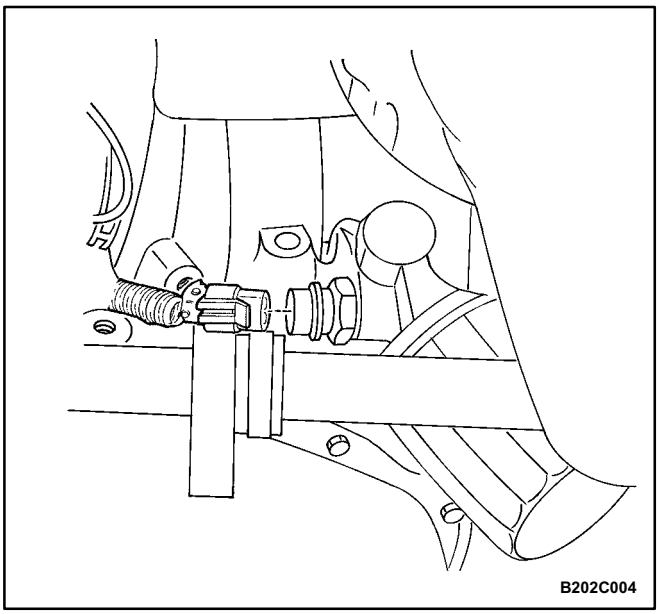

Removal Procedure

1. Disconnect the negative battery cable.
2. Remove the timing belt. Refer to "Timing Belt" in this section.
3. Remove the rear timing belt cover. Refer to "Rear Timing Belt Cover" in this section.
4. Disconnect the oil pressure switch connector.

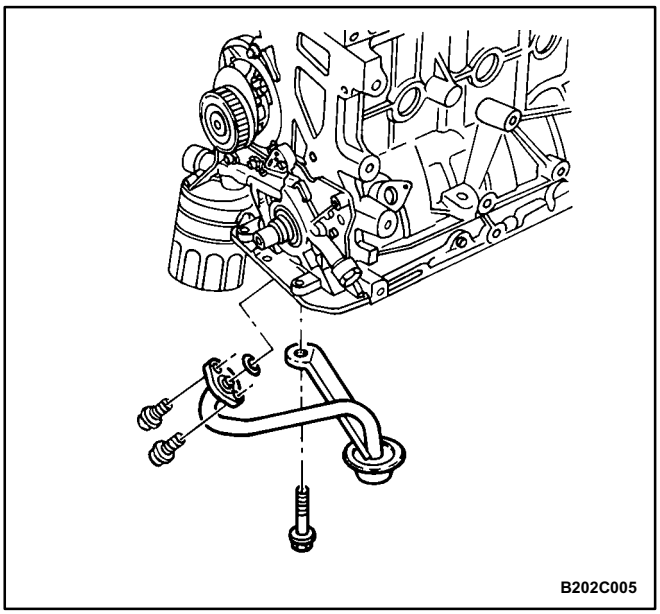

5. Remove the oil pan. Refer to "Oil Pan" in this section.
6. Remove the oil pump pickup tube and the support bracket bolts.
7. Remove the oil pump pickup tube.

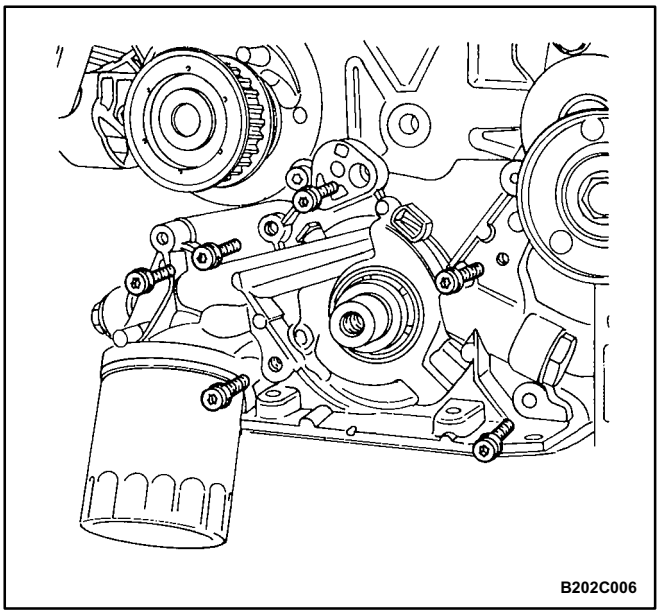

8. Remove the oil pump retaining bolts.
9. Carefully separate the oil pump and the gasket from the engine block.
10. Remove the oil pump.

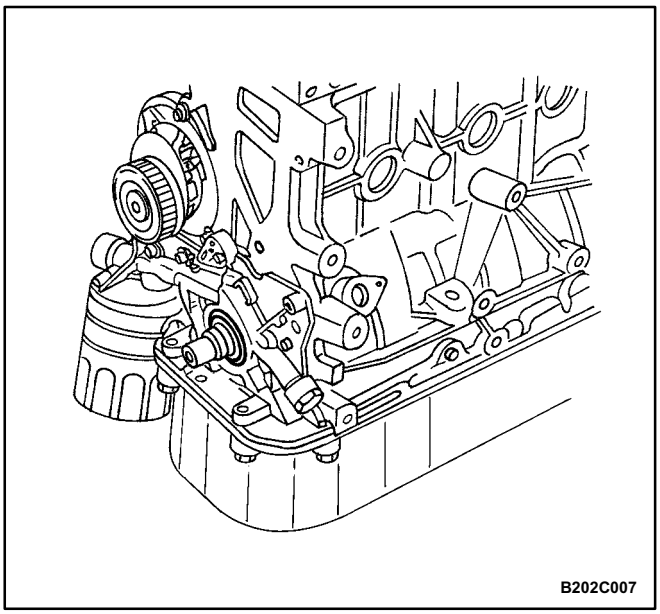

Inspection Procedure

1. Clean the oil pump and the engine block gasket mating surfaces.
2. Remove the safety relief valve bolt.
3. Remove the safety relief valve and the spring.
4. Remove the oil pump-to-crankshaft seal.

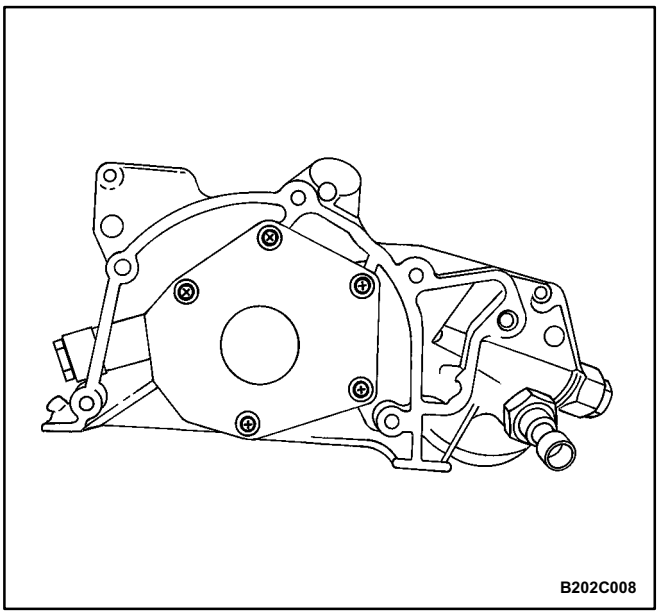

5. Remove the oil pump rear cover bolts.
6. Remove the rear cover.

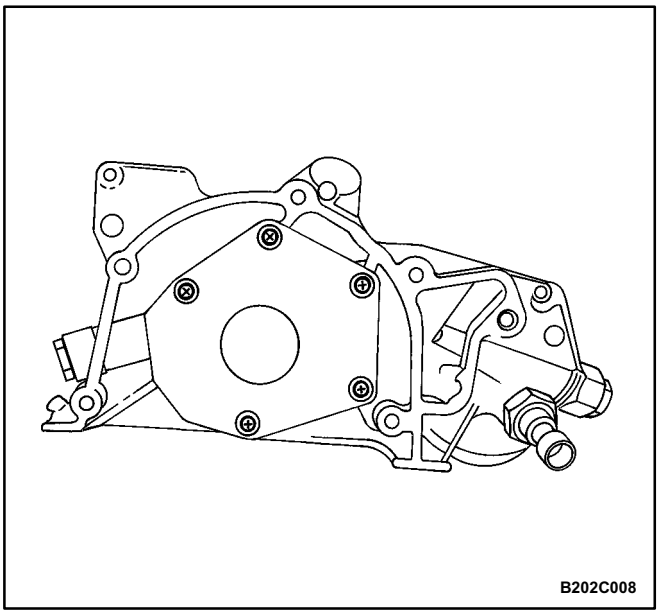

7. Clean the oil pump housing and all of the parts.
8. Inspect all of the parts for signs of wear. Refer to "Engine Specifications" in this section.
9. Coat all of the oil pump parts with clean engine oil and reinstall the parts.

Notice: Pack the oil pump gear cavity with petroleum jelly to ensure an oil pump prime, or engine damage could result.

10. Apply Loctite® 242 to the rear cover bolts, and install the cover and the bolts.

Tighten

Tighten the oil pump rear cover bolts to 6 N•m (53 lb•in).

11. Install the safety relief valve, the spring, the washer, and the bolt.

Tighten

Tighten the oil pump safety relief valve bolt to 30 N•m (22 lb•ft).

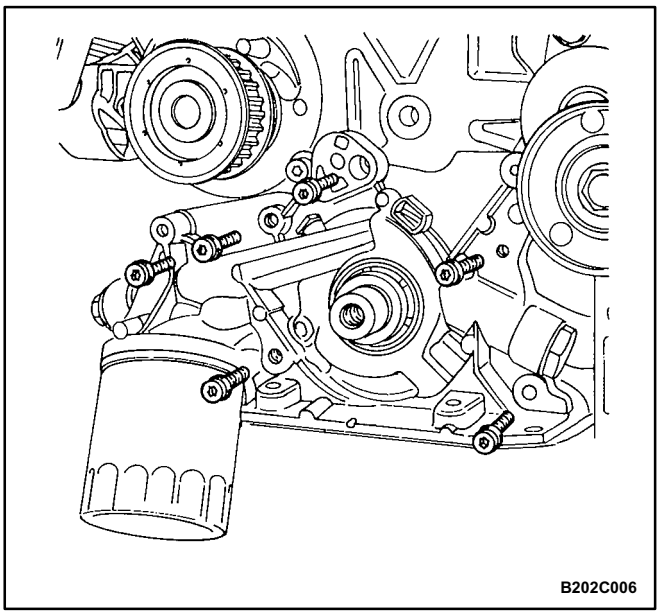

Installation Procedure

1. Apply Loctite® 242 to the oil pump bolts and room temperature vulcanizing (RTV) sealant to the new oil pump gasket.
2. Install the gasket to the oil pump, and install the oil pump to the engine block with the bolts.

Tighten

Tighten the oil pump retaining bolts to 10 N•m (89 lb•in).

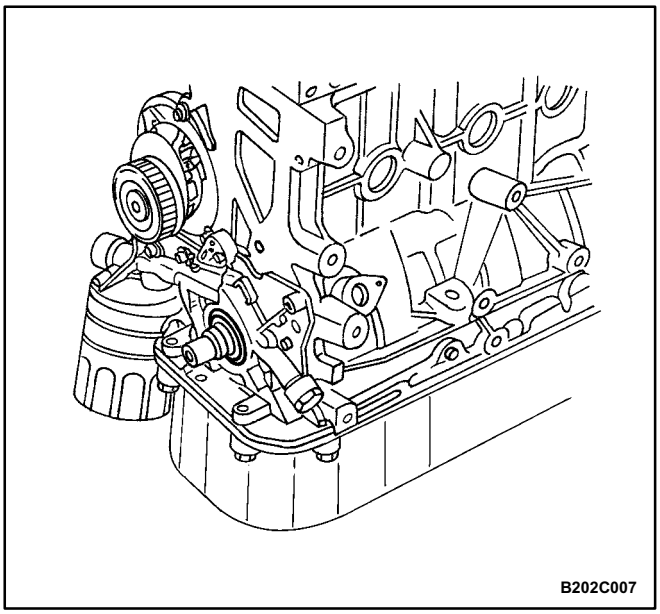

3. Install a new oil pump-to-crankshaft shaft seal. Coat the lip of the seal with a thin coat of grease.

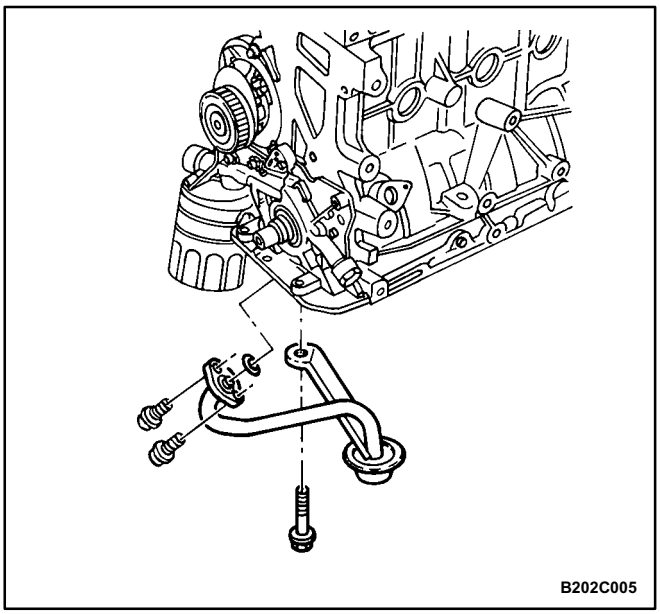

4. Coat the threads of the oil pump pickup tube and the support bracket bolts with Loctite® 242.
5. Install the oil pump pickup tube and the bolts.

Tighten

Tighten the oil pump pickup tube and the support bracket bolts to 10 N•m (89 lb•in).

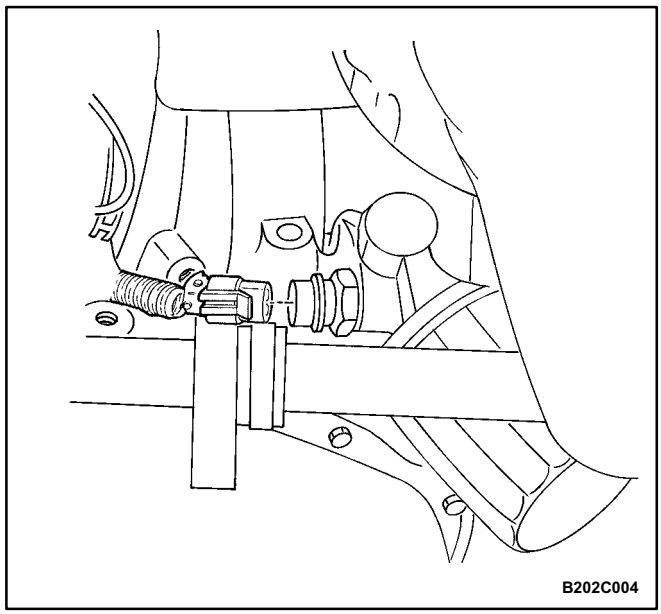

6. Install the oil pan. Refer to "Oil Pan" in this section.
7. Connect the oil pressure switch connector.
8. Install the rear timing belt cover. Refer to "Rear Timing Belt Cover" in this section.
9. Install the timing belt. Refer to "Timing Belt" in this section.
10. Connect the negative battery cable.

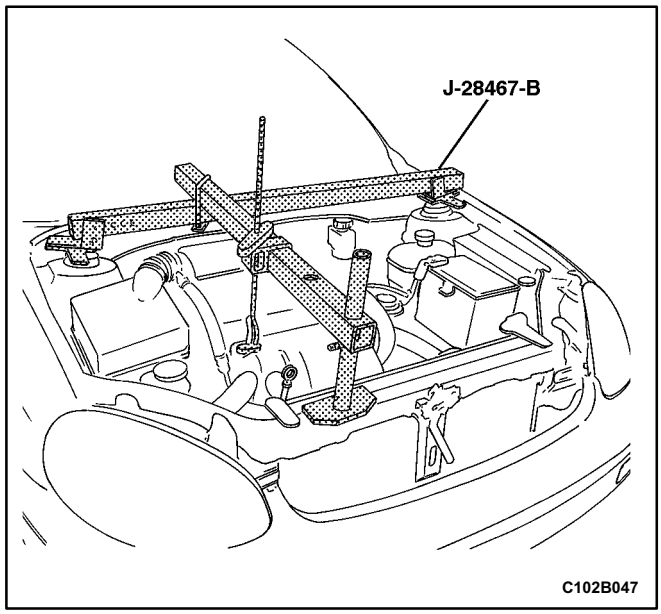

ENGINE MOUNT, RIGHT SIDE

Tools Required

J28467B Engine Assembly Support Fixture

Removal Procedure

1. Disconnect the negative battery cable.
2. Support the engine assembly using the engine assembly support fixture J-28467-B.
3. Remove the right front wheel well splash shield. Refer to *Section 9R, Body Front End*.
4. Remove the air filter housing retaining bolts.
5. Remove the air filter housing.

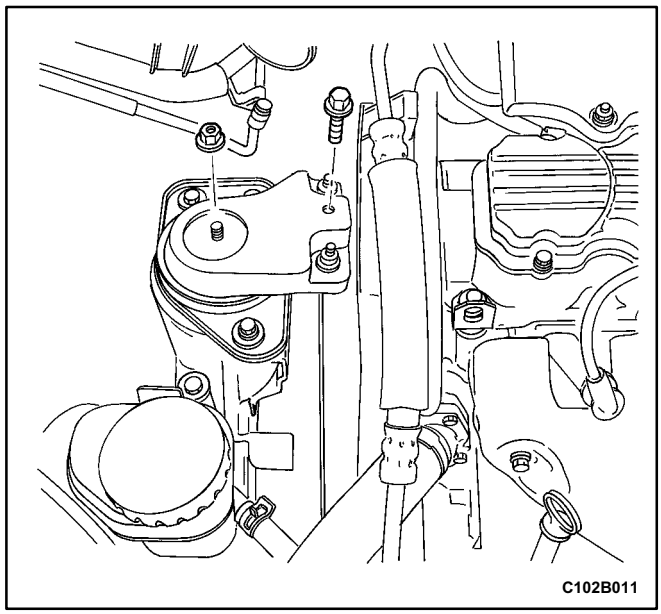

6. Remove the right side engine mount bracket retaining bolts/nuts.
7. Remove the right side engine mount bracket.
8. Remove the serpentine accessory drive belt. Refer to *Section 6B, Power Steering Pump*.
9. Remove the timing belt. Refer to "Timing Belt" in this section.
10. Remove the timing belt automatic tensioner bolt.
11. Remove the timing belt automatic tensioner.

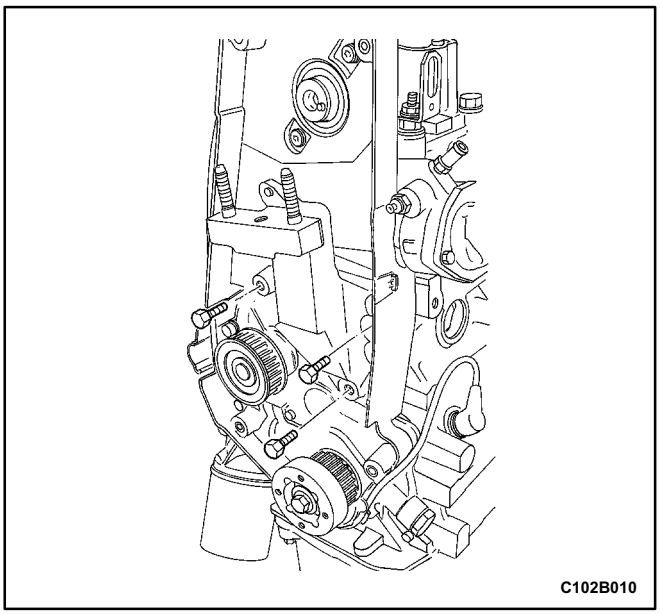

12. Remove the right side engine mount retaining bolts/nuts.
13. Remove the right side engine mount.

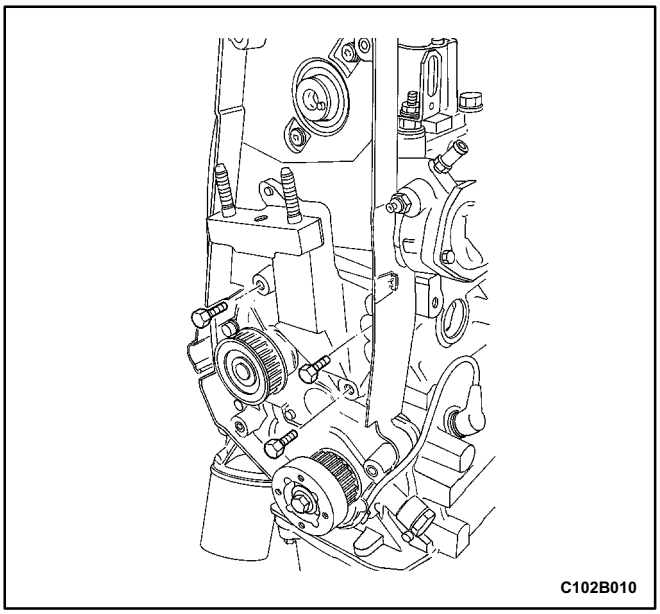

Installation Procedure

1. Install the right side engine mount.
2. Install the right side engine mount retaining bolts/nuts.

Tighten

Tighten the right side engine mount retaining bolts/nuts to 60 N•m (44 lb•ft).

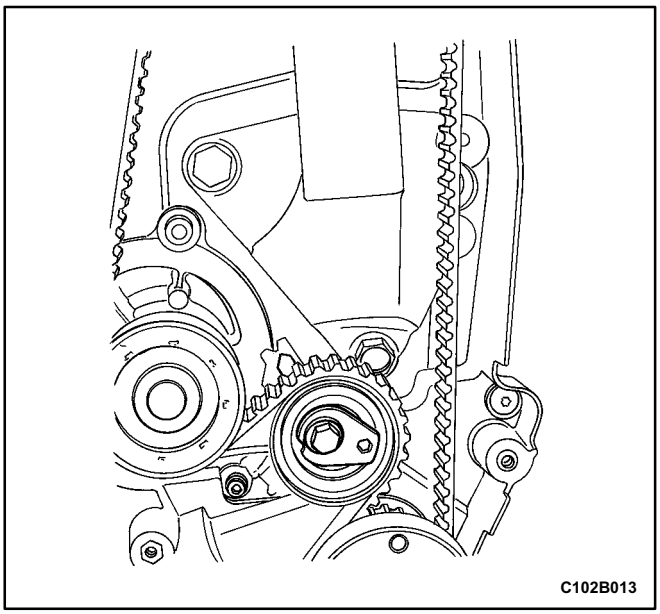

3. Install the timing belt automatic tensioner and the retaining bolt.
4. Install the timing belt. Refer to Timing Belt" in this section.

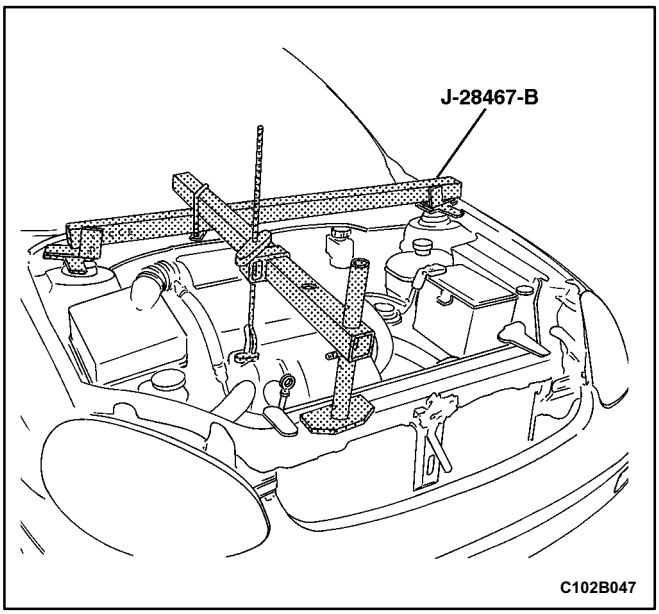

5. Install the right front wheel well splash shield. Refer to *Section 9R, Body Front End*.
6. Install the right side engine mount bracket and the retaining bolts/nuts.

Tighten

Tighten the right side engine mount bracket retaining bolts/nuts to 60 N•m (44 lb••ft).

7. Remove engine assembly support fixture J-28467-B.
8. Install the serpentine accessory drive belt. Refer to *Section 6B, Power Steering Pump*.
9. Install the air filter housing and the bolts.

Tighten

Tighten the air filter housing bolts to 8 N•m (71 lb•in).

10. Connect the negative battery cable.

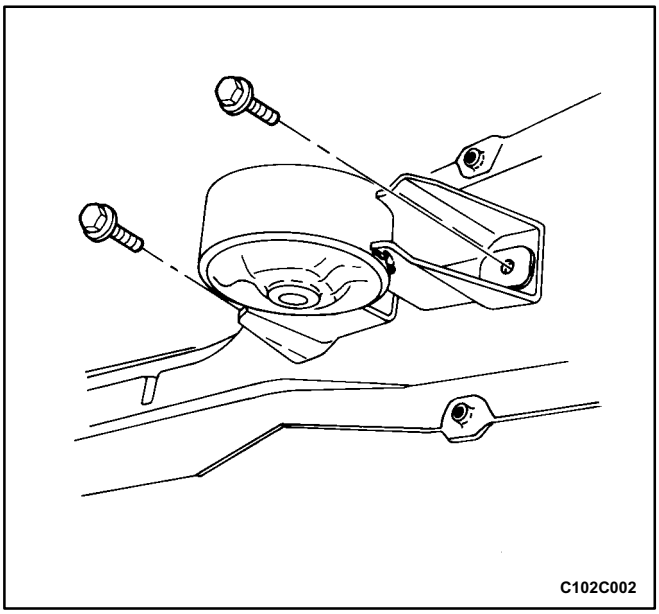

ENGINE MOUNT, FORWARD

Removal Procedure

1. Disconnect the negative battery cable.
2. Raise and suitably support the vehicle.
3. Remove the center member. Refer to *Section 9N, Frame and Underbody.*
4. Remove the bolts that secure the forward engine mount to the center member.
5. Remove the forward engine mount.

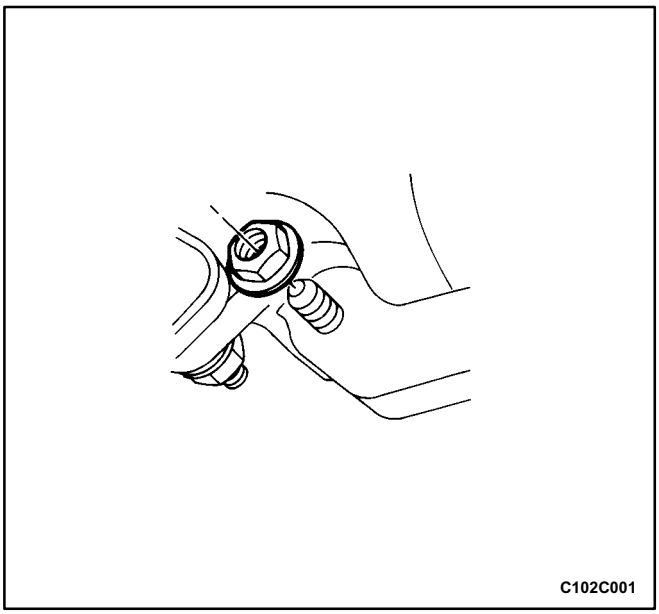

6. Remove the forward engine mount bracket-to-engine block nuts.

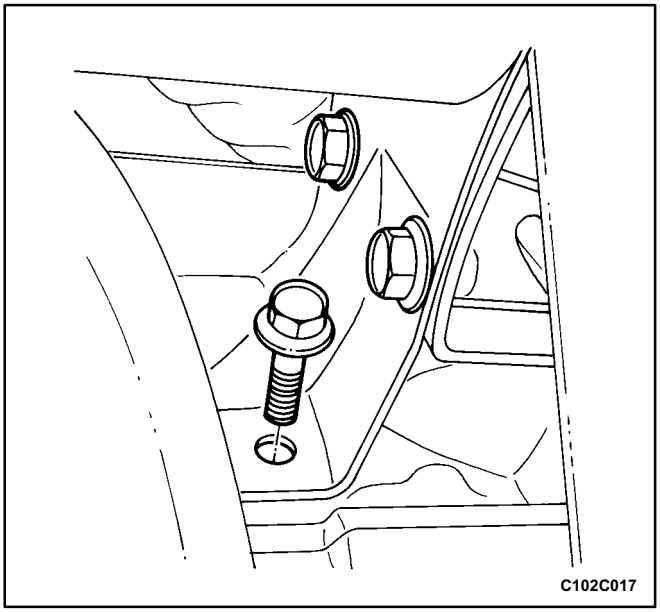

7. Remove the forward engine mount bracket-to-engine block bolts.
8. Remove the forward engine mount bracket.

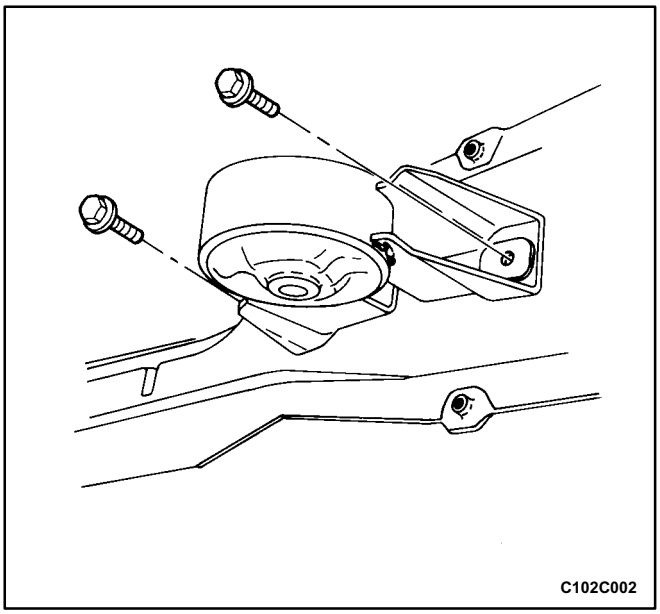

Installation Procedure

1. Install the forward engine mount to the center member with the bolts and the nuts.

   Tighten

   Tighten the forward engine mount bolts and the nuts to 65 N•m (48 lb•ft).

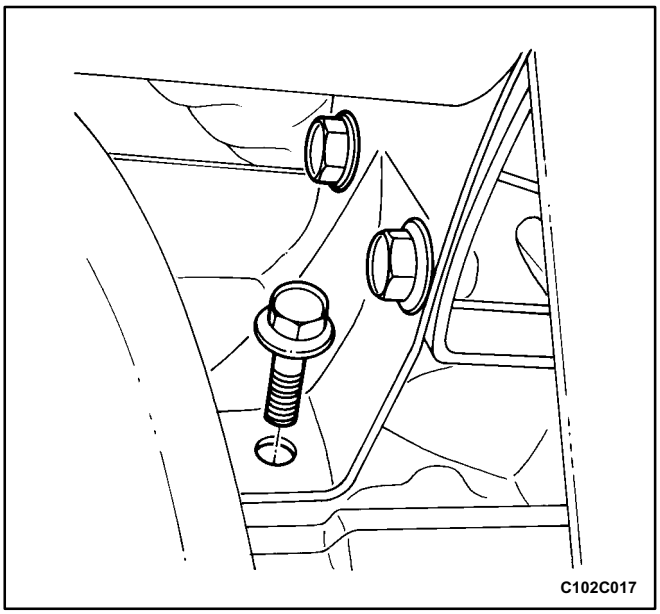

2. Install the forward engine mount bracket-to-engine block bolts.

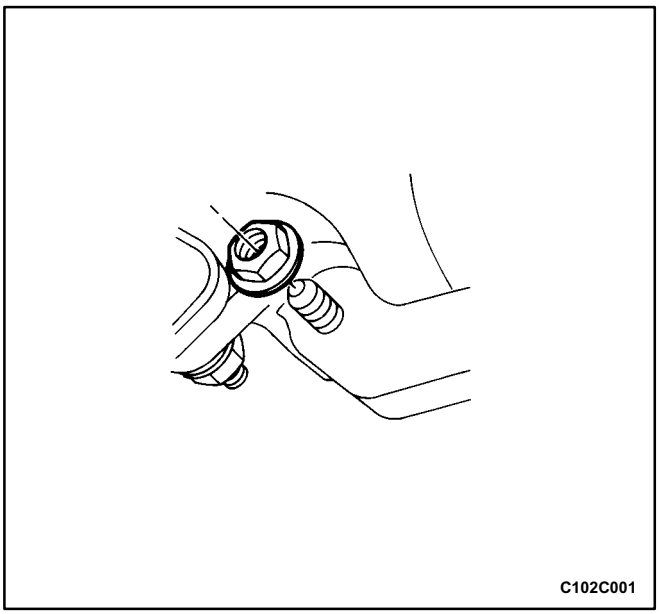

3. Install the forward engine mount bracket-to-engine block nuts.

Tighten

Tighten the forward engine mount bracket-to-engine block bolts and the nuts to 90 N•m (66 lb•ft).

4. Install the center member. Refer to *Section 9N, Frame and Underbody.*
5. Lower the vehicle.
6. Connect the negative battery cable.

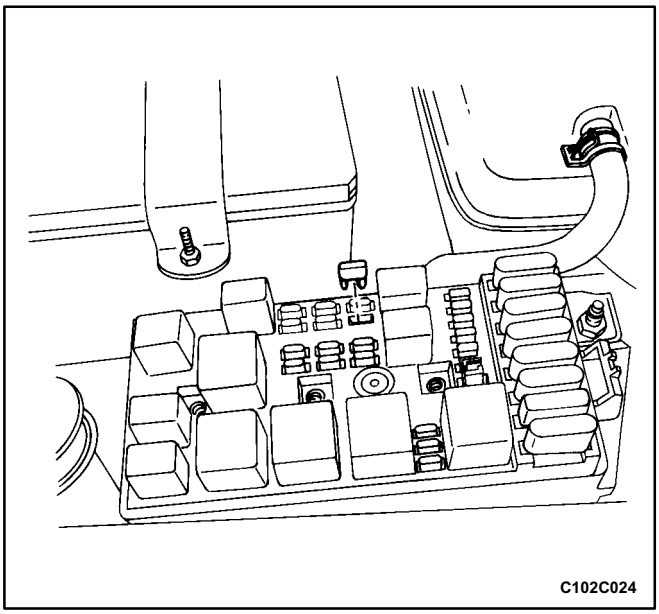

INTAKE MANIFOLD

Removal Procedure

1. Remove the fuel pump fuse.
2. Start the engine. After it stalls, crank the engine for 10seconds to rid the fuel system of fuel pressure.
3. Disconnect the negative battery cable.
4. Disconnect the canister purge solenoid vacuum hose and connector.
5. Drain the engine coolant. Refer to *Section 1D, Engine Cooling.*

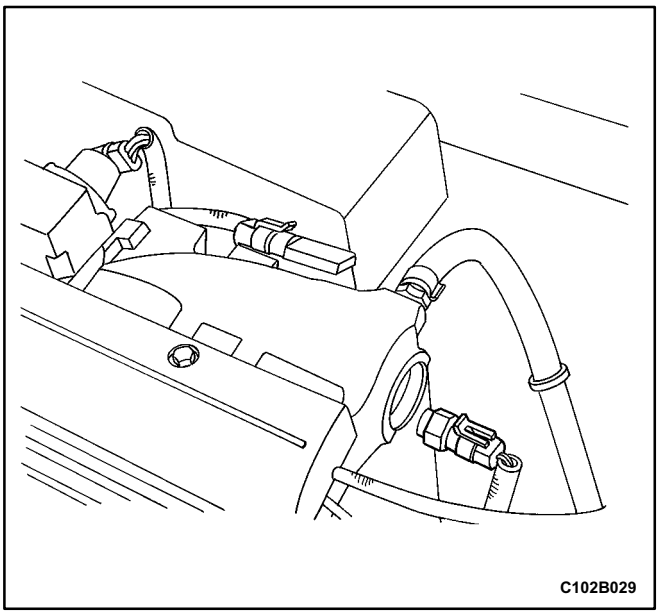

6. Disconnect the manifold air temperature sensor connector.
7. Disconnect the air intake tube from the throttle body.

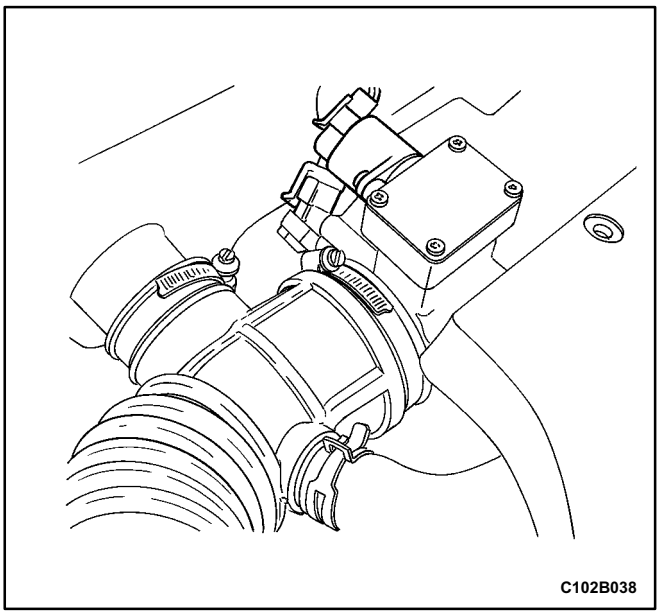

8. Disconnect the idle air control valve connector.
9. Disconnect the throttle position sensor connector.
10. Disconnect the manifold absolute pressure (MAP) sensor connector.
11. Disconnect the coolant hoses at the throttle body.

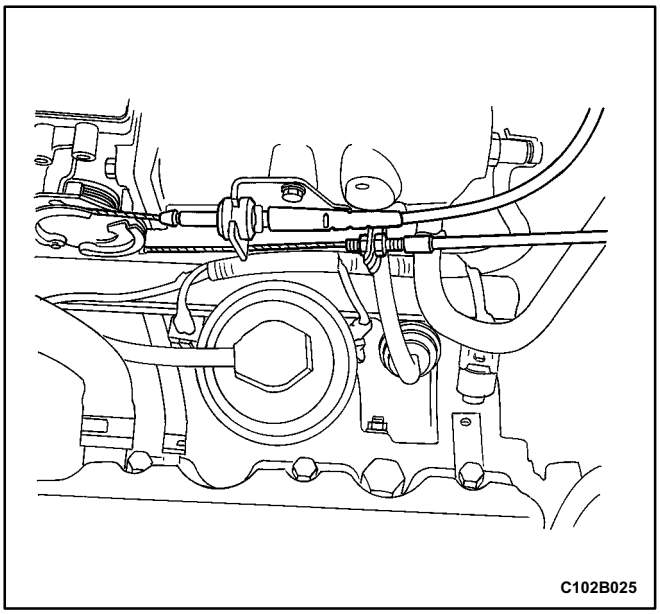

12. Disconnect all of the necessary vacuum hoses, including the vacuum hose at the fuel pressure regulator and the brake booster vacuum hose at the intake manifold.
13. Disconnect the throttle cable from the throttle body and the intake manifold.
14. Remove the throttle cable bracket bolts from the intake manifold.
15. Remove the throttle cable bracket.
16. Remove the fuel rail and injector cover as an assembly. Refer to *Section 1F, Engine Controls*.
17. Remove the alternator and the support bracket. Refer to *Section 1E, Engine Electrical.*

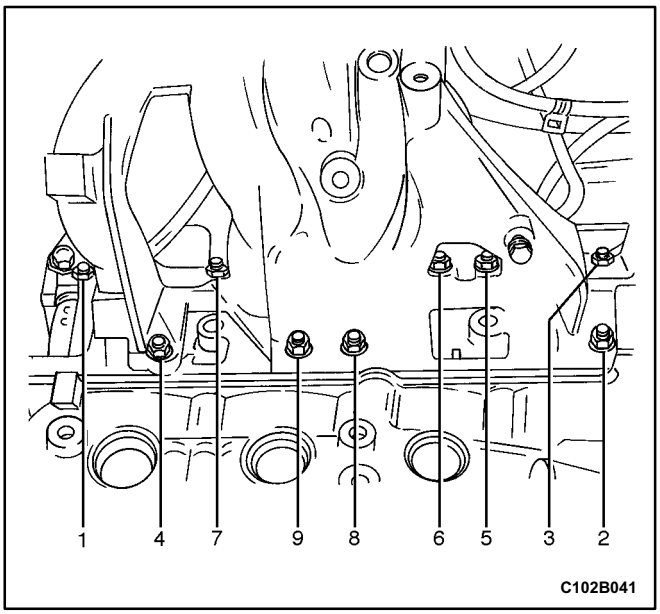

18. Remove the intake manifold retaining nuts in the sequence shown.
19. Remove the intake manifold.
20. Remove the intake manifold gasket.
21. Clean the sealing surfaces of the intake manifold and the cylinder head.

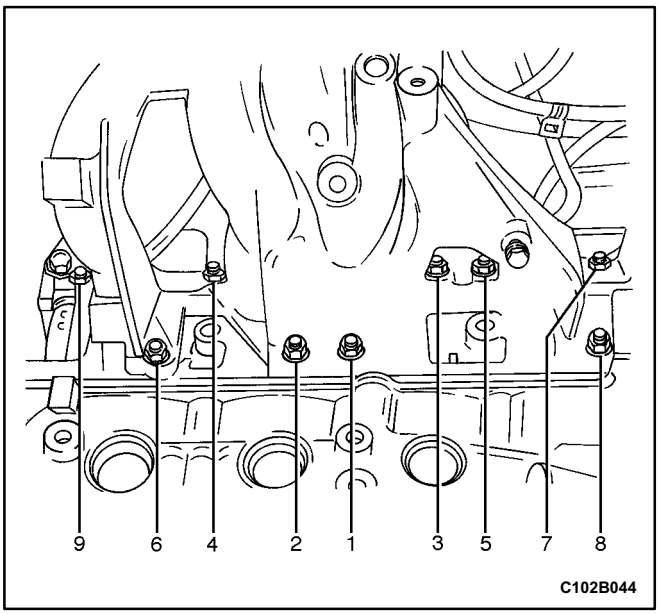

Installation Procedure

1. Install the intake manifold gasket.
2. Install the intake manifold.
3. Install the intake manifold retaining nuts in the sequence shown.

Tighten

Tighten the intake manifold retaining nuts to 18 N•m (13 lb•ft).

4. Install the alternator and the support bracket. Refer to *Section 1E, Engine Electrical*.

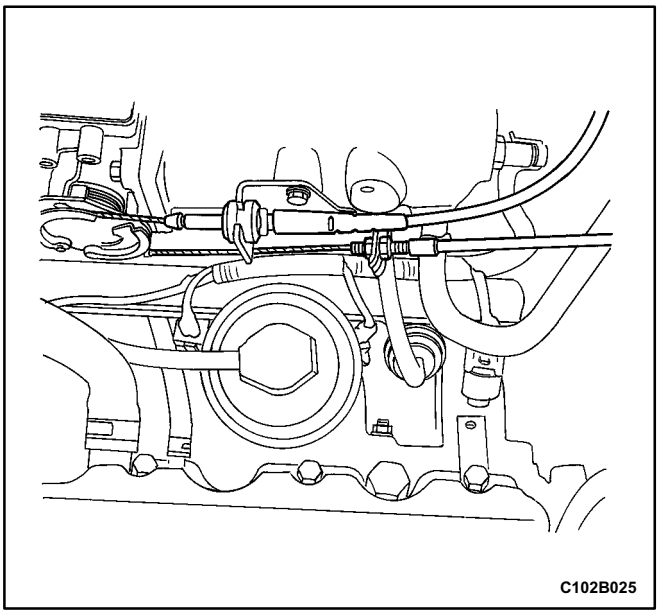

5. Install the fuel rail and injector cover as an assembly. Refer to *Section 1F, Engine Controls*.
6. Install the throttle cable bracket.
7. Install the throttle cable bracket bolts.

Tighten

Tighten the throttle cable bracket bolts to 8 N•m (71 lb•in).

8. Connect the throttle cable to the intake manifold and the throttle body.
9. Connect all of the necessary vacuum lines that were previously disconnected.

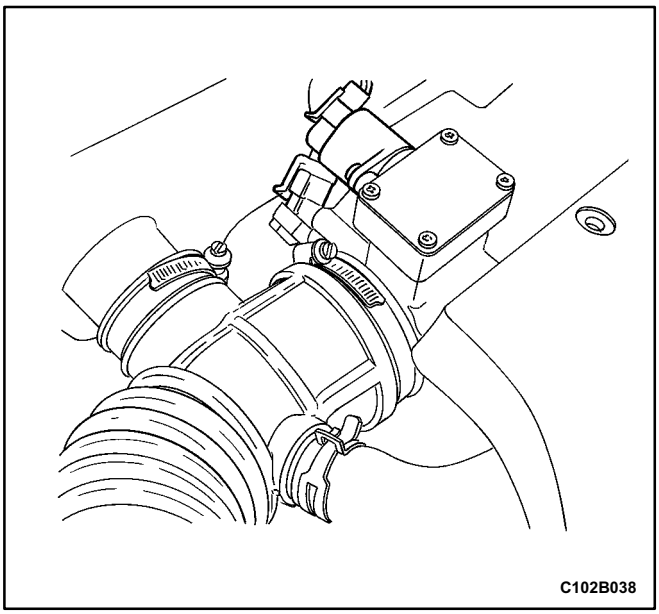

10. Connect the MAP sensor connector.
11. Connect the coolant hoses to the throttle body.
12. Connect the idle air control valve connector.
13. Connect the throttle position sensor connector.

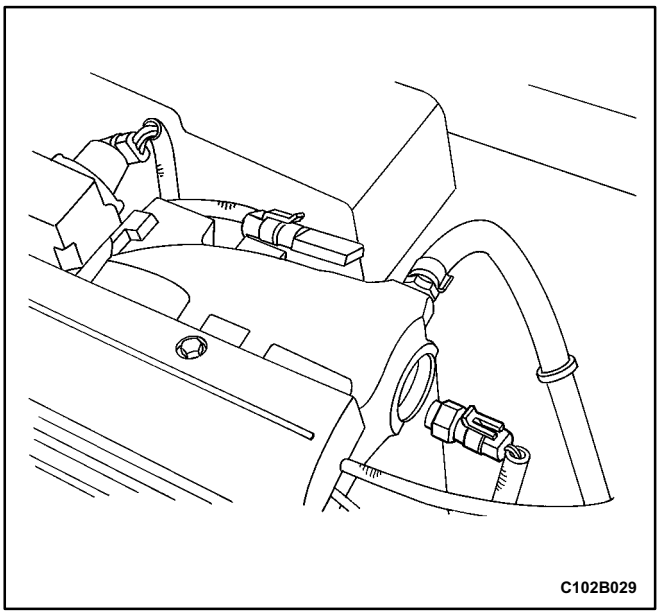

14. Connect the air intake tube to the throttle body.
15. Connect the manifold air temperature sensor connector.
16. Connect the canister purge solenoid vacuum hose and connector.
17. Install the fuel pump fuse.
18. Connect the negative battery cable.
19. Refill the engine cooling system. Refer to *Section 1D, Engine Cooling*.

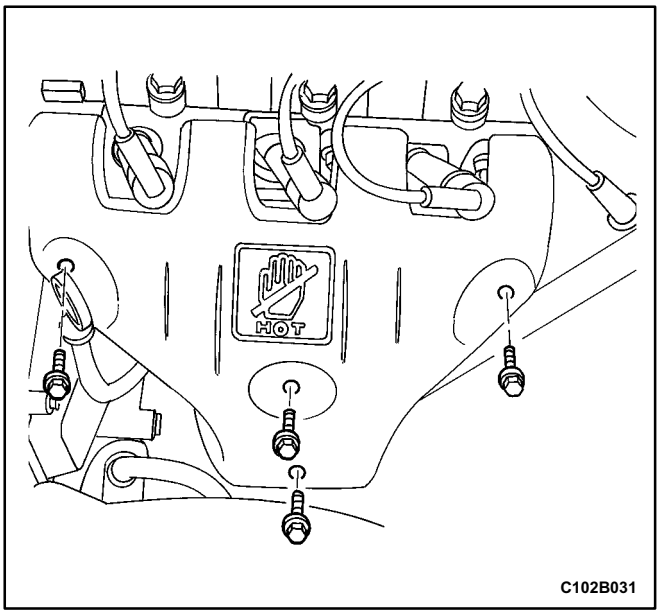

EXHAUST MANIFOLD

Removal Procedure

1. Disconnect the negative battery cable.
2. Disconnect the oxygen sensor connector.
3. Remove the exhaust manifold heat shield bolts.
4. Remove the exhaust manifold heat shield.

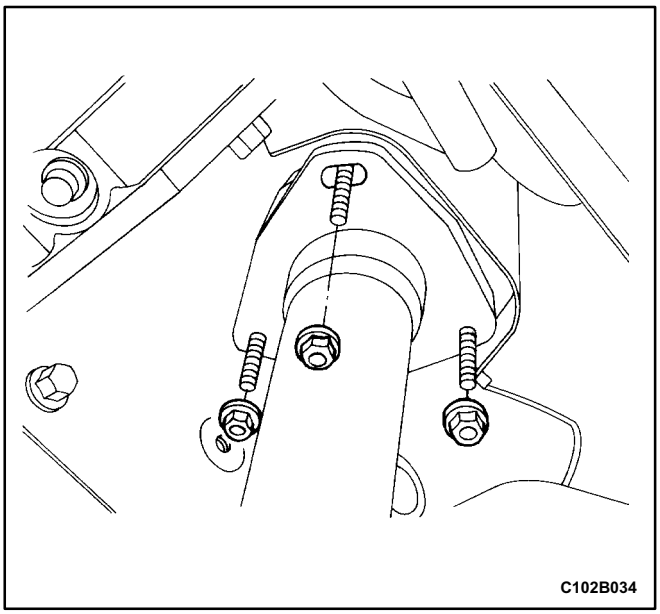

5. Remove the exhaust flex pipe retaining nuts from the exhaust manifold studs.

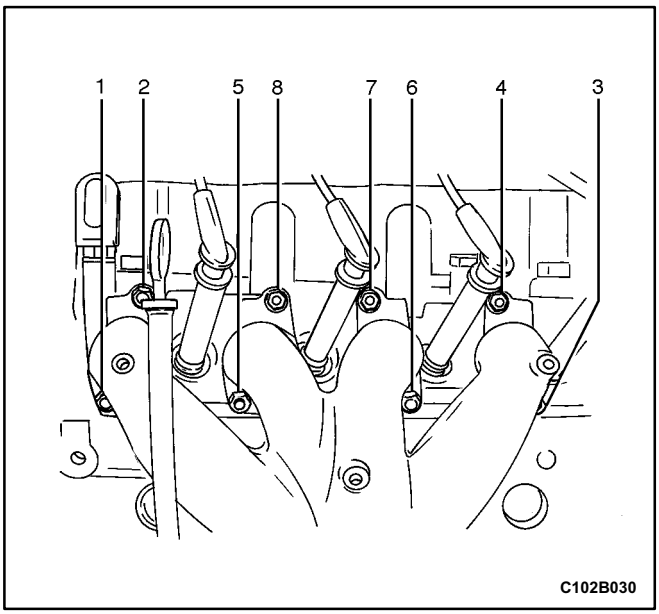

6. Remove the exhaust manifold retaining nuts in the sequence shown.
7. Remove the exhaust manifold.
8. Remove the exhaust manifold gasket.
9. Clean the sealing surfaces of the exhaust manifold and the cylinder head.

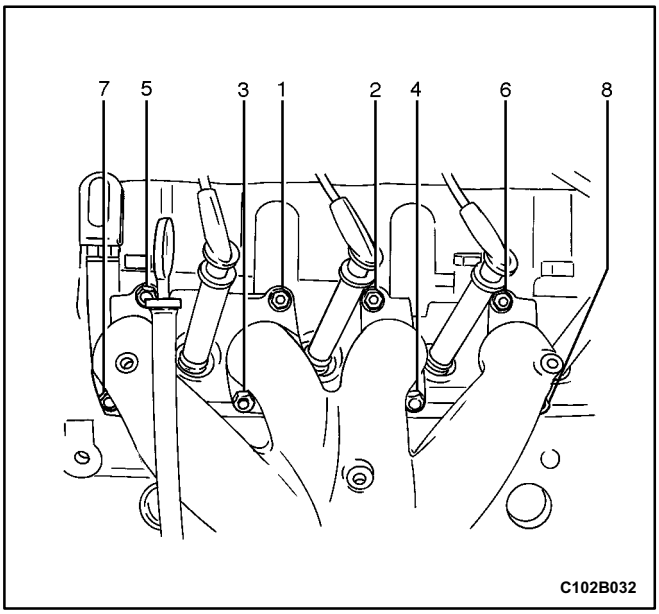

Installation Procedure

1. Install the exhaust manifold gasket.
2. Install the exhaust manifold.
3. Install the eight exhaust manifold retaining nuts and tighten in the sequence shown.

Tighten

Tighten the exhaust manifold retaining nuts to 15 N•m (11 lb•ft).

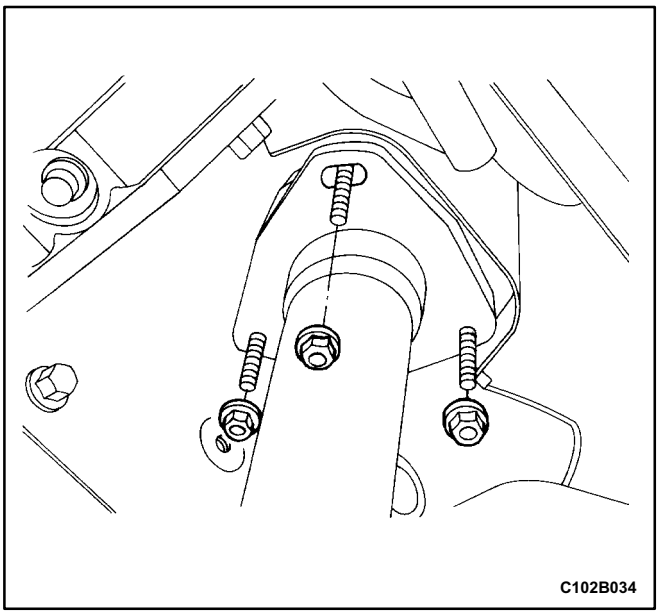

4. Install the exhaust flex pipe retaining nuts to the exhaust manifold studs.

Tighten

Tighten the three exhaust flex pipe-to-exhaust manifold retaining nuts to 22 N•m (16 lb•ft).

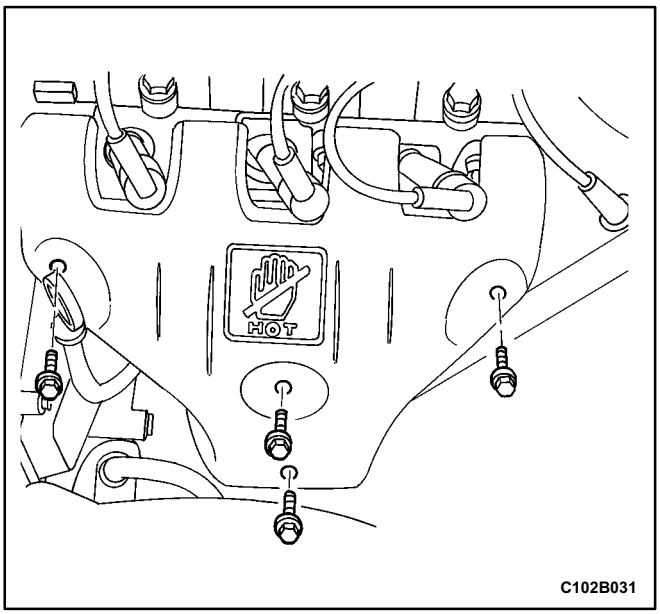

5. Install the manifold heat shield.
6. Install the exhaust manifold heat shield bolts.

   Tighten

   Tighten the exhaust manifold heat shield bolts to 8Ñ•m (71 lbl•ft).
7. Connect the oxygen sensor connector.
8. Connect the negative battery cable.

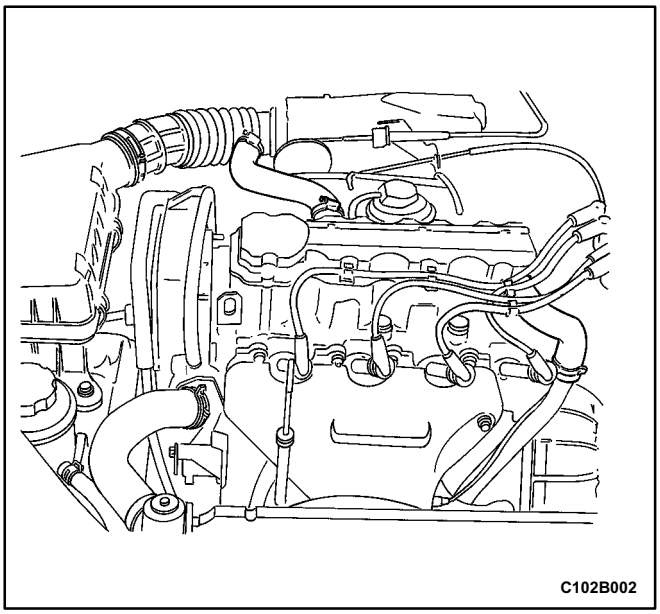

CAMSHAFT GEAR

Removal Procedure

1. Disconnect the negative battery cable.
2. Remove the timing belt. Refer to Timing Belt" in this section.
3. Disconnect the ignition wires from the spark plugs.
4. Disconnect the crankcase breather tubes from the valve cover.

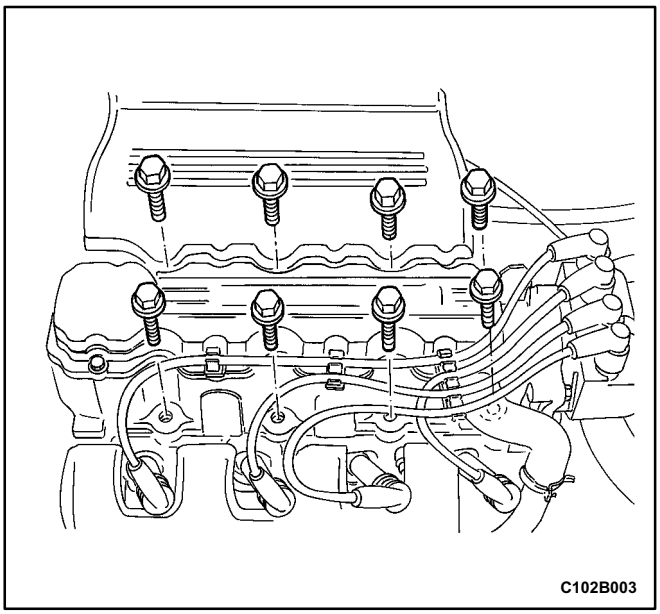

5. Remove the valve cover bolts.
6. Remove the valve cover and the valve cover gasket.

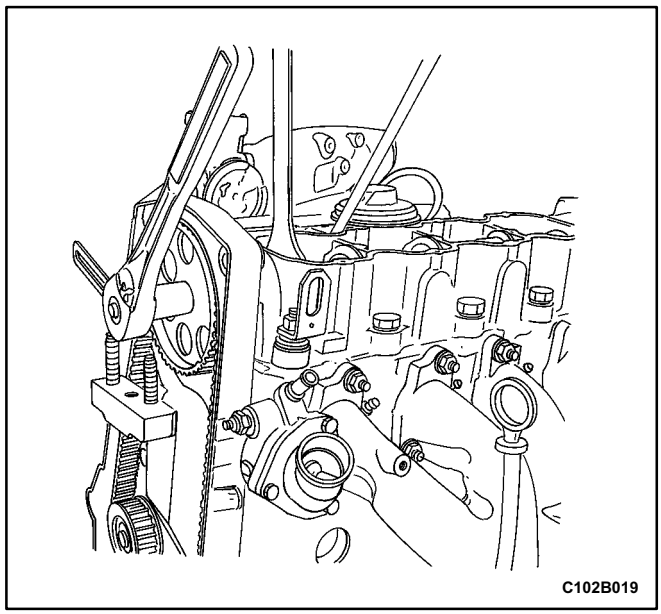

Notice: Take extreme care to prevent any scratches, nicks or damage to the camshaft. Such damage can cause premature engine wear.

7. While holding the camshaft firmly in place, remove the camshaft gear retaining bolt.
8. Remove the camshaft gear.

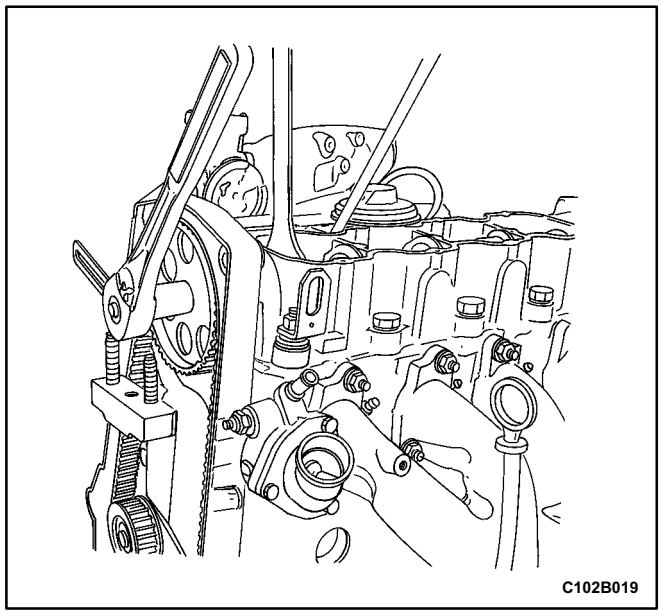

Installation Procedure

Notice: Take extreme care to prevent any scratches, nicks or damage to the camshaft. Such damage can cause premature engine wear.

1. Install the camshaft gear.
2. While holding the camshaft firmly in place, install the camshaft gear retaining bolt.

Tighten

Tighten the camshaft gear retaining bolt to 45 N•m (33 lb•ft).

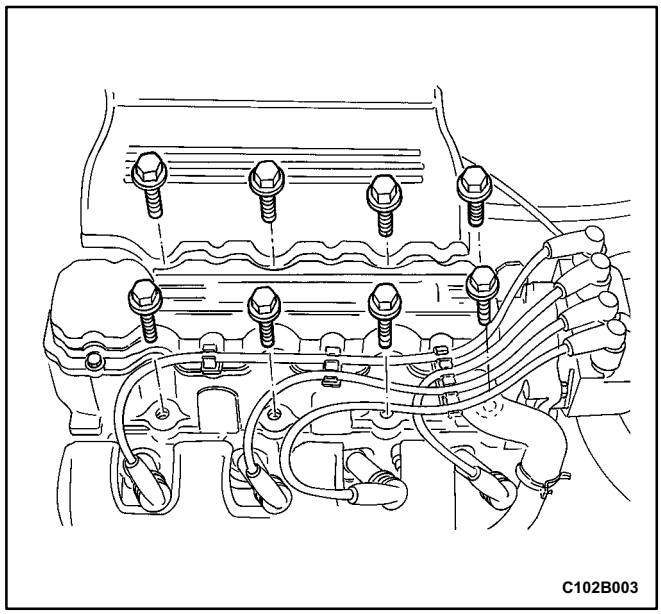

3. Install the valve cover and the valve cover gasket.
4. Install the valve cover bolts.

Tighten

Tighten the valve cover bolts to 8 N•m (71 lb•in).

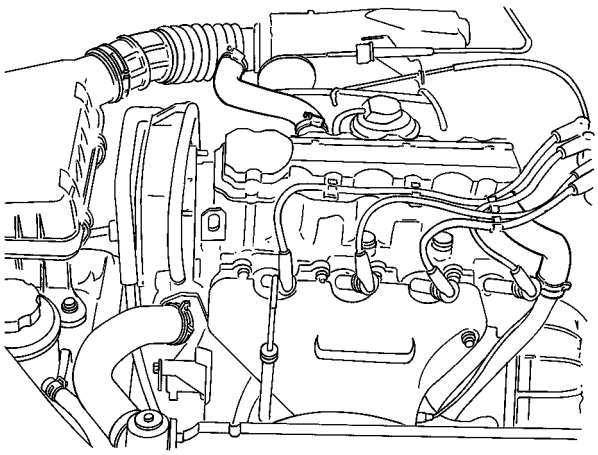
C102B002

5. Connect the crankcase breather tubes to the valve cover.
6. Connect the ignition wires to the spark plugs.
7. Install the timing belt. Refer to "Timing Belt" in this section.
8. Connect the negative battery cable.

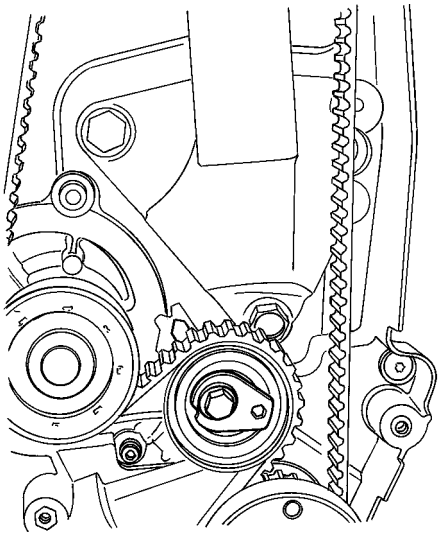
C102B013

REAR TIMING BELT COVER

Tools Required

KM-470B Angular Torque Gauge

Removal Procedure

1. Disconnect the negative battery cable.
2. Remove the timing belt. Refer to "Timing Belt" in this section.
3. Remove the camshaft gear. Refer to "Camshaft Gear" in this section.
4. Remove the timing belt automatic tensioner bolt.
5. Remove the timing belt automatic tensioner.

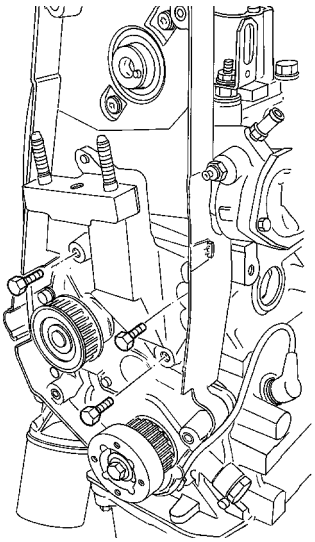
C102B010

6. Remove the right side engine mount retaining bolts/nuts.
7. Remove the right side engine mount.
8. Remove the crankshaft gear bolt.
9. Remove the crankshaft gear.
10. Remove the knock sensor wire from its track.

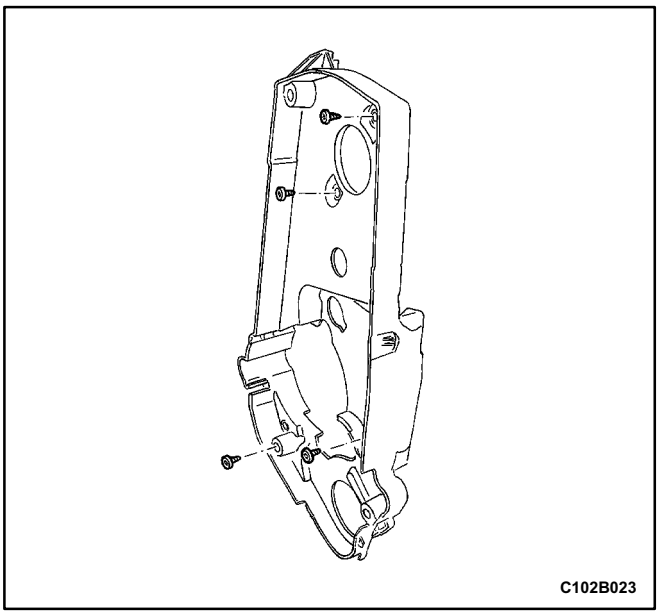

11. Remove the rear timing belt cover bolts.
12. Remove the rear timing belt cover.

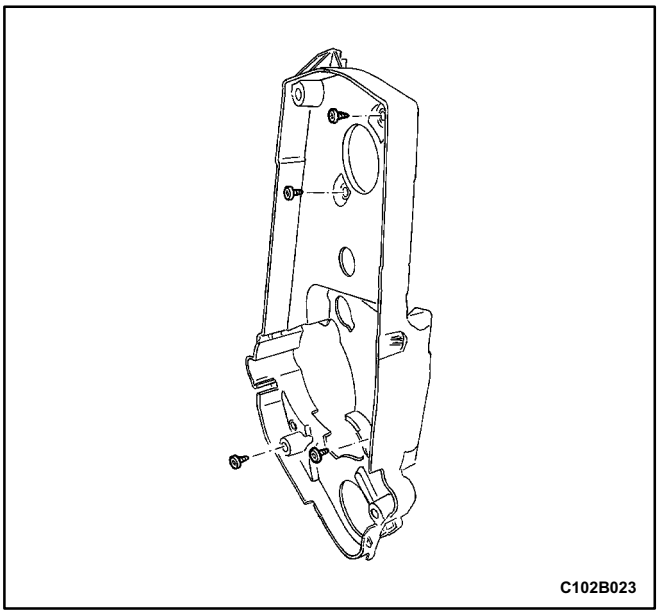

Installation Procedure

1. Install the rear timing belt cover.
2. Install the rear timing belt cover bolts.

   Tighten

   Tighten the rear timing belt cover bolts to 6 N•m (53 lb•in).
3. Install the right side engine mount and retaining bolts/nuts.

   Tighten

   Tighten the right side engine mount retaining bolts/nuts to 60 N•m (44 lb•ft).
4. Route the knock sensor wire into its track.

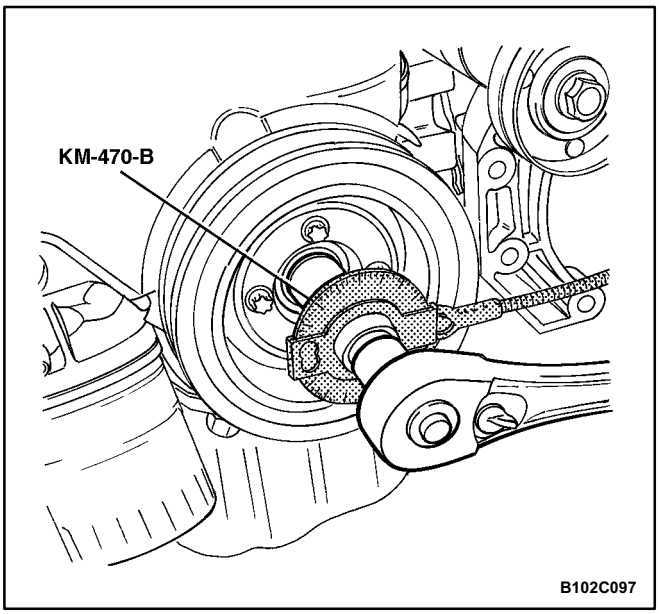

5. Install the crankshaft timing belt drive gear and the bolt.

   Tighten

   Tighten the crankshaft timing belt drive gear bolt to 95 N•m (70 lb•ft). Use the angular torque gauge KM-470-B to tighten the bolt another 30 degrees plus 15 degrees.

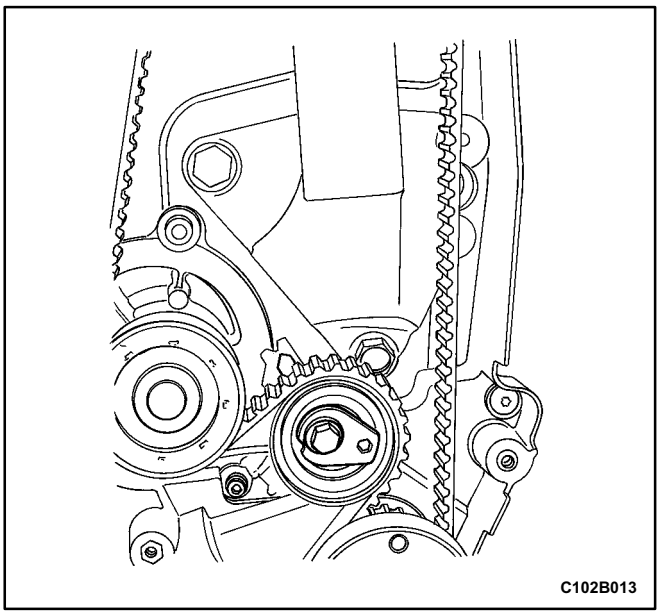

6. Install the timing belt automatic tensioner and the bolt.

Tighten

Tighten the timing belt automatic tensioner bolt to 25 N•m (18 lb•ft).

7. Install the camshaft gear. Refer to "Camshaft Gear" in this section.
8. Install the timing belt and the timing belt cover. Refer to "Timing Belt" in this section.
9. Connect the negative battery cable.

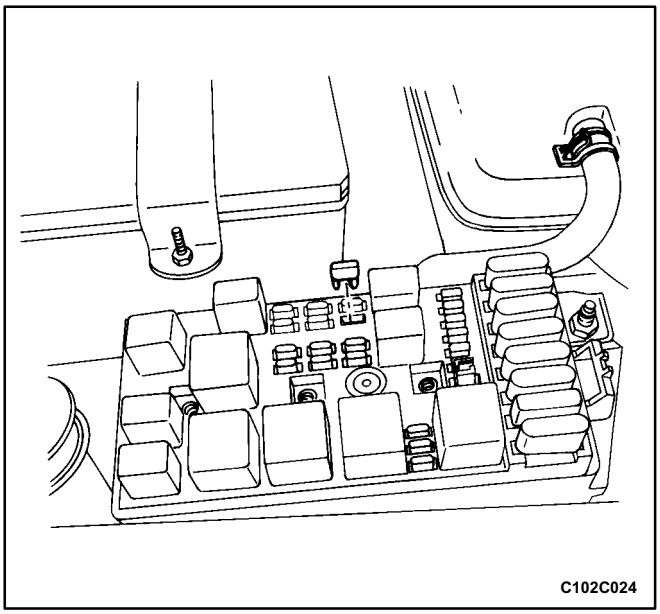

ENGINE

Removal Procedure

1. Remove the fuel pump fuse.
2. Start the engine. After it stalls, crank the engine for 10 seconds to rid the fuel system of fuel pressure.
3. Remove the hood. Refer to *Section 9R, Body Front End*.
4. Drain the engine oil.
5. Disconnect the negative battery cable.
6. Remove the bolts and the resonator.

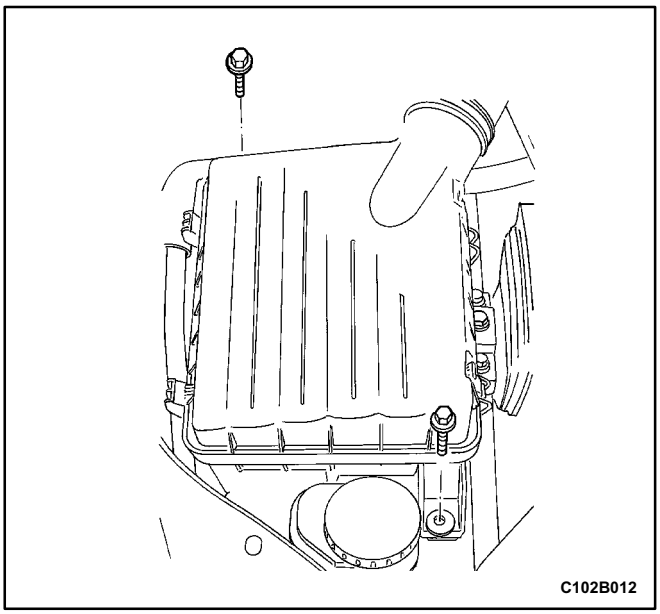

7. Discharge the air conditioning system. Refer to *Section 7B, Manual Control Heating, Ventilation, and Air Conditioning System*.
8. Disconnect the manifold air temperature sensor connector.
9. Remove the air intake tube and air filter housing assembly and bolts.
10. Remove the right front wheel. Refer to *Section 2E, Tires and Wheels.*
11. Remove the right front wheel well splash shield. Refer to *Section 9R, Body Front End.*
12. Remove the accessory drive belt. Refer to *Section 6B, Power Steering Pump*.

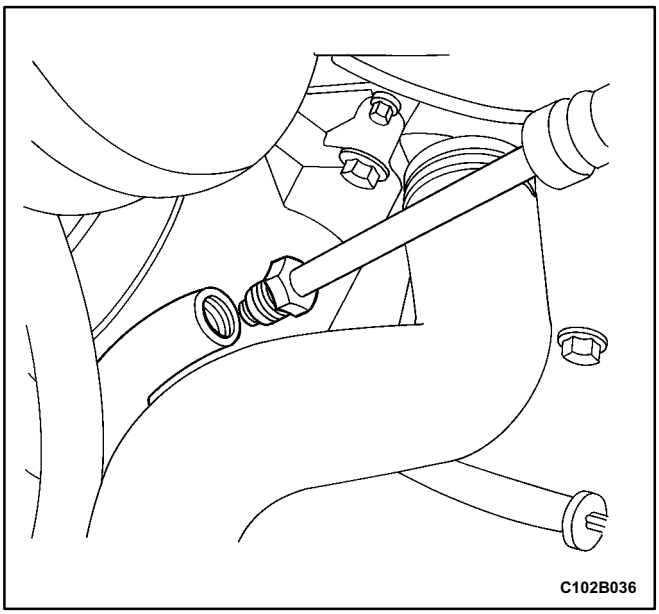

13. Drain the engine coolant. Refer to *Section 1D, Engine Cooling.*
14. Remove the cooling system radiator and the engine cooling fans. Refer to *Section 1D, Engine Cooling.*
15. Disconnect the upper radiator hose from the thermostat housing.
16. Disconnect the power steering return hose from the power steering pump.
17. Disconnect the power steering pressure hose from the power steering pump and move clear.
18. Disconnect the electrical connector at the DIS ignition coil and the ECM ground terminal.

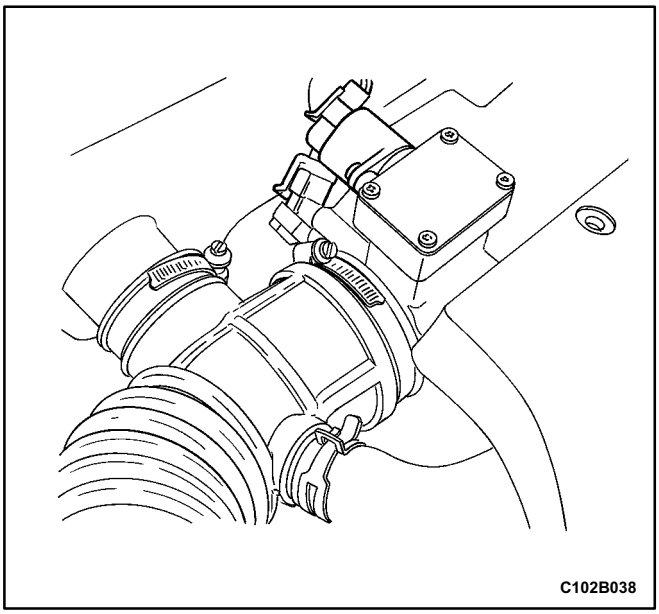

19. Disconnect the oxygen sensor connector.
20. Disconnect the idle air control valve connector.
21. Disconnect the throttle position sensor connector.
22. Disconnect the engine coolant temperature sensor connector.
23. Disconnect the coolant temperature sensor connector.
24. Disconnect the alternator voltage regulator connector and power lead.

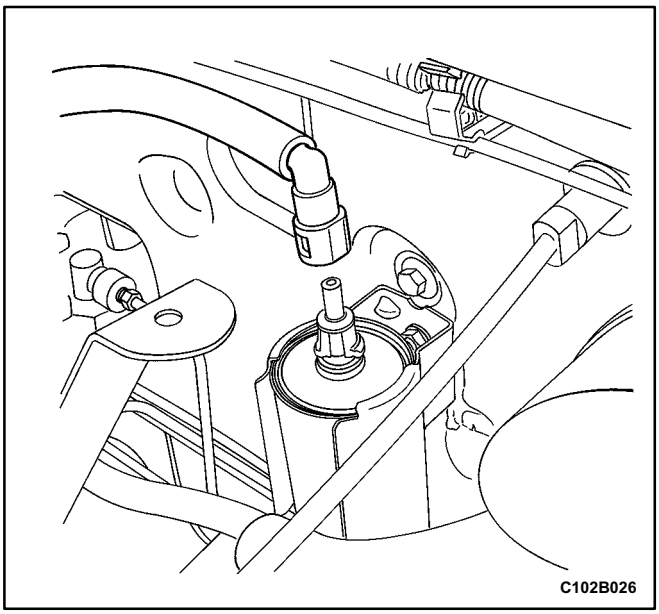

25. Disconnect all of the necessary vacuum lines including the brake booster vacuum hose.
26. Disconnect the fuel return line at the fuel pressure regulator.
27. Disconnect the fuel feed line at the fuel filter.
28. Remove the fuel rail and injector channel cover as an assembly. Refer to *Section 1F, Engine Controls*.

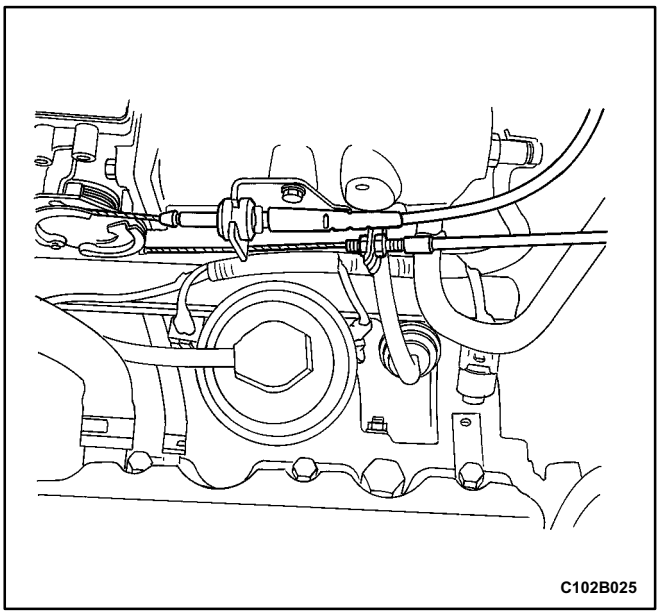

29. Disconnect the throttle cable from the throttle body and the intake manifold bracket.
30 Disconnect the coolant hose at the throttle body.
31. Disconnect the heater hoses at the coolant pipe and the coolant manifold.
32. Disconnect the coolant bypass hose from the cylinder head.
33. Disconnect the coolant surge tank hose from the coolant pipe.
34. Disconnect the lower radiator hose from the coolant pipe.
35. Disconnect the starter solenoid "S" terminal wire and power lead.
36. Remove the A/C compressor. Refer to *Section 7B, Manual Control Heating, Ventilation, and Air Conditioning System.*

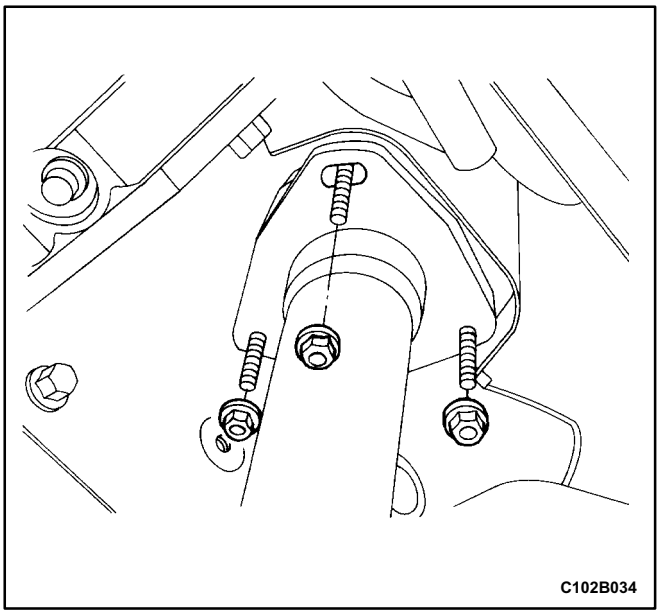

37. Remove the exhaust flex pipe retaining nuts from the exhaust manifold studs.
38. Remove the exhaust flex pipe retaining nuts from the catalytic converter.
39. Remove the exhaust flex pipe.
40. Remove the center member. Refer to *Section 9N, Frame and Underbody*.

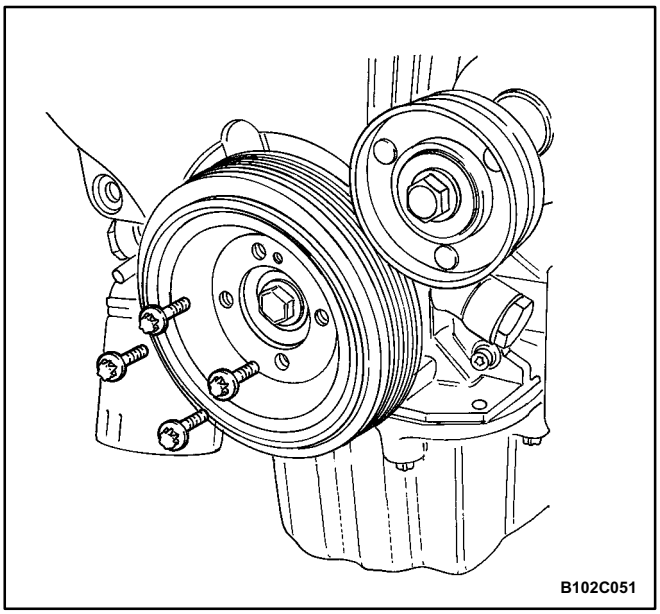

41. Remove the crankshaft pulley bolts.
42. Remove the crankshaft pulley.
43. Disconnect the vacuum lines at the charcoal canister purge solenoid.
44. Disconnect the electrical connector at the charcoal canister purge solenoid.
45. Disconnect the electrical connector at the oil pressure switch.
46. Disconnect the crankshaft position sensor connector.

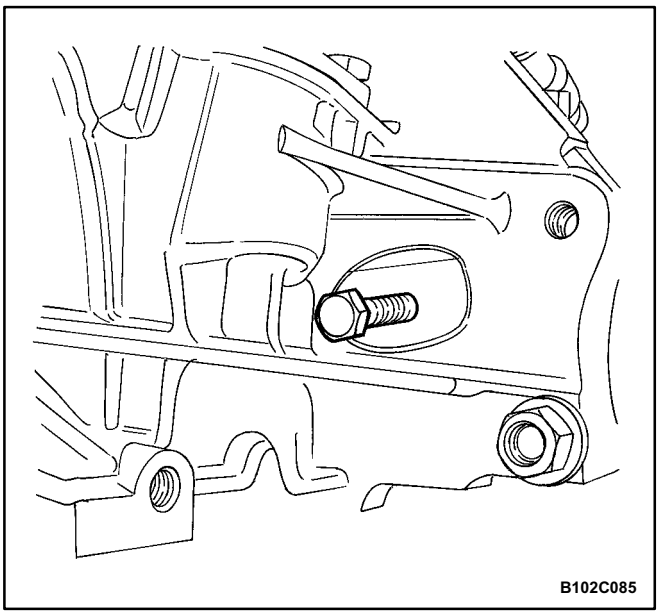

47. Remove the transaxle torque converter bolts, if automatic transaxle equipped.
48. Remove the transaxle bell housing bolts and the oil pan flange bolts.
49. Support the transaxle with a floor jack.
50. Install the engine lifting device.

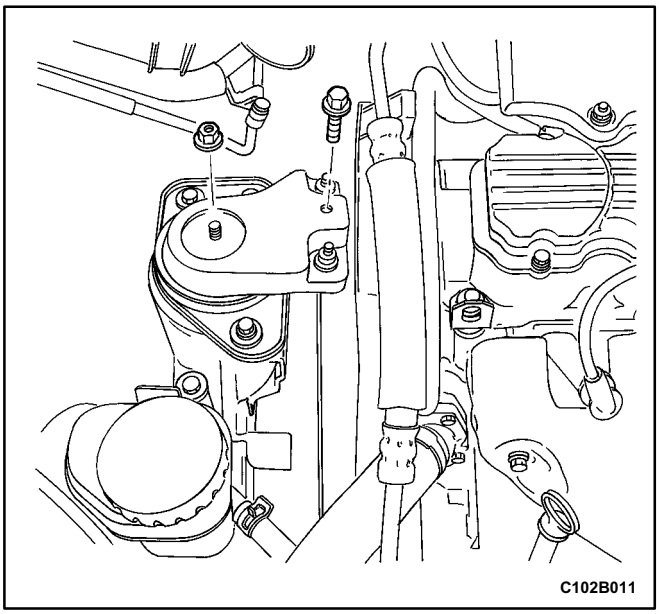

51. Disconnect the right side engine mount bracket from the engine mount by removing the retaining bolts/nuts.
52. Remove the right side engine mount bracket from the engine block and the frame mount.
53. Separate the engine block from the transaxle.
54. Remove the engine.

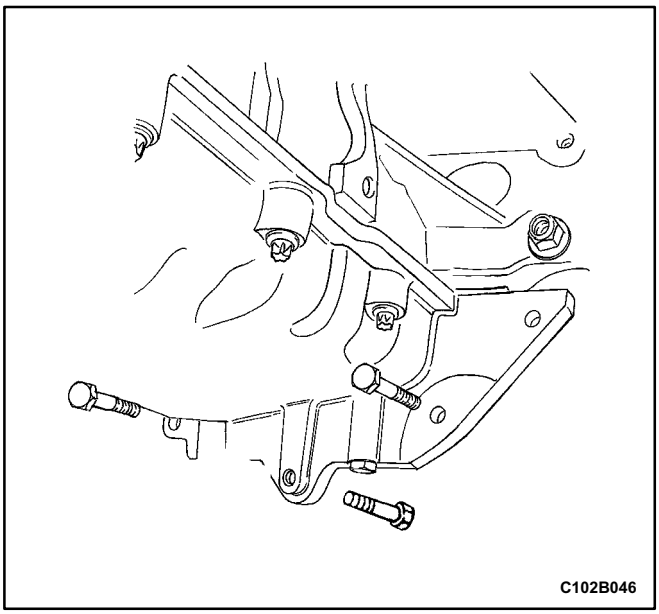

Installation Procedure

1. Install the engine into the engine compartment.
2. Align the engine alignment pins to the transaxle.
3. Install the transaxle bell housing bolts.

   Tighten

   Tighten the transaxle bell housing bolts to 75 N•m (55 lb•ft).
4. Install the oil pan flange-to-transaxle bolts.

   Tighten

   Tighten the oil pan flange-to-transaxle retaining bolts to 40 N•m (30 lb•ft).

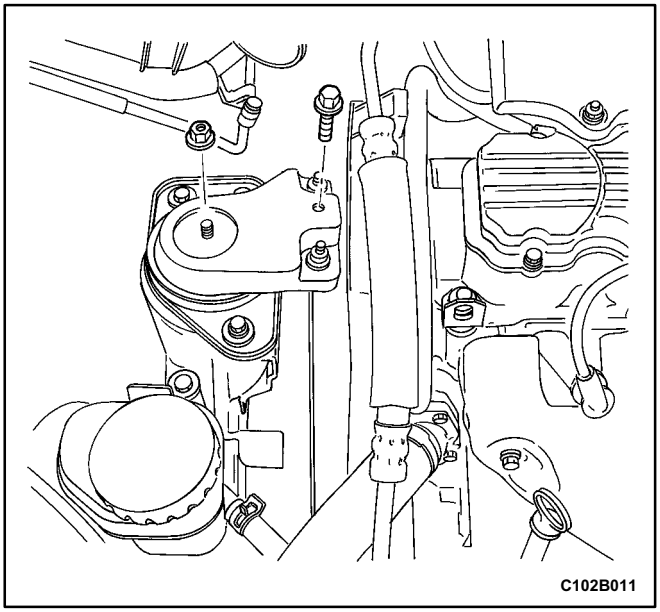

5. Install the right side engine mount bracket to the engine block mount and the frame mount.
6. Install the right side engine mount bracket retaining bolts/nuts.

Tighten

Tighten the right side engine mount bracket retaining bolts/nuts to 60 N•m (44 lb•ft).

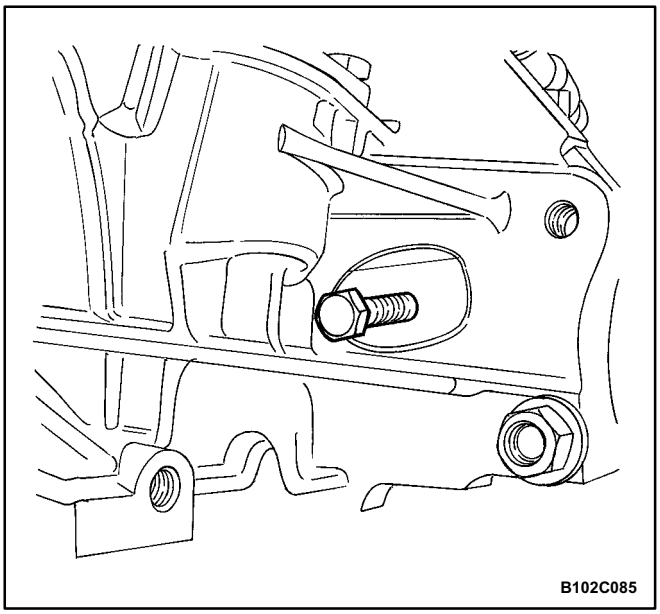

7. Remove the floor jack used for support of the transaxle.
8. Remove the engine lifting device.
9. Install the transaxle torque converter bolts, if automatic transaxle equipped.

Tighten

Tighten the transaxle torque converter bolts to 60 N•m (44 lb•).

10. Install the center member. Refer to *Section 9N, Frame and Underbody*.

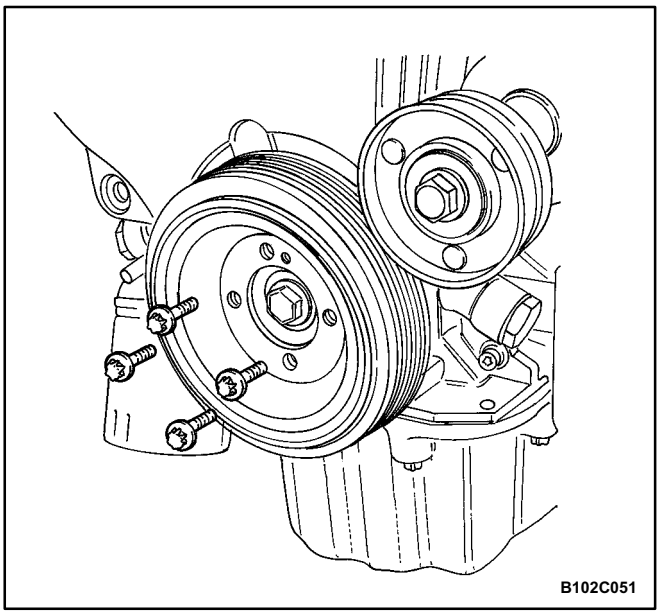

11. Connect the vacuum lines at the charcoal canister purge solenoid.
12. Connect the electrical connector to the charcoal canister purge solenoid.
13. Connect the oil pressure switch connector.
14. Install the crankshaft pulley.
15. Install the crankshaft pulley bolts.

Tighten

Tighten the crankshaft pulley bolts to 20 N•m (15 lb•) using a torque wrench.

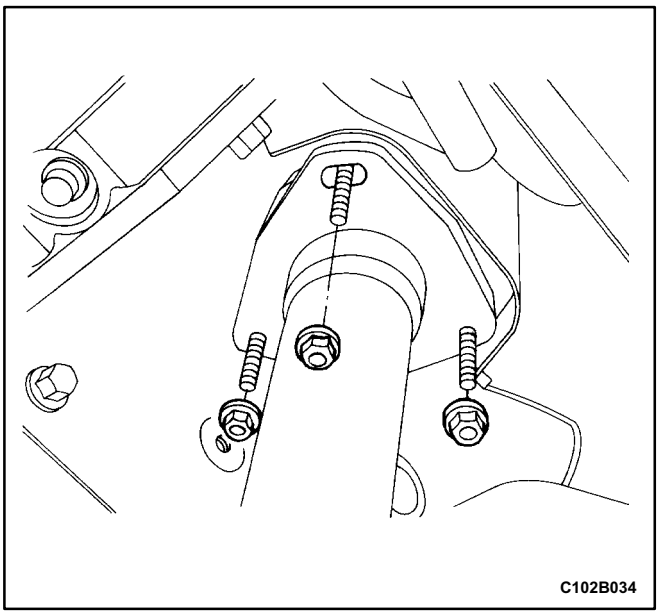

16. Connect the crankshaft position sensor connector.
17. Install the exhaust flex pipe.
18. Install the exhaust flex pipe retaining nuts to the exhaust manifold studs.

Tighten

Tighten the exhaust flex pipe-to-exhaust manifold retaining nuts to 22 N•m (16 lb•ft).

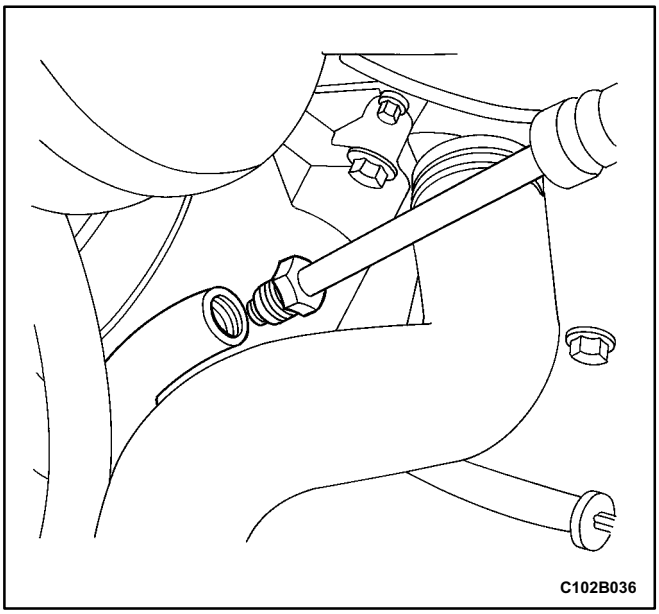

19. Install the exhaust flex pipe retaining nuts to the catalytic converter.

Tighten

Tighten the exhaust flex pipe-to-catalytic converter retaining nuts to 30 N•m (22 lb•ft).

20 Connect the power steering pressure hose.
21. Connect the power steering return hose.
22. Install the A/C compressor. Refer to *Section 7B, Manual Control Heating, Ventilation, and Air Conditioning System.*

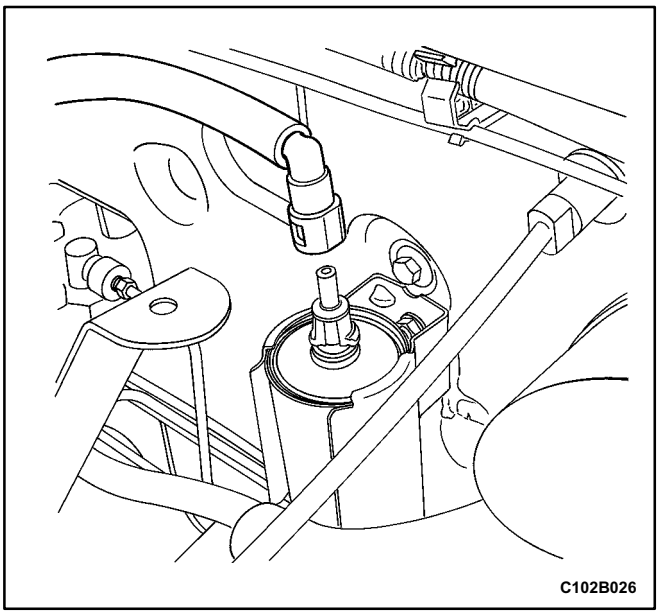

23. Install the serpentine accessory drive belt. Refer to *Section 6B, Power Steering Pump.*
24. Install the right front wheel well splash shield. Refer to *Section 9R, Body Front End.*
25. Install the right front wheel. Refer to *Section 2E, Tires and Wheels.*
26. Connect the fuel feed line to the fuel filter.
27. Connect the fuel return line to the fuel pressure regulator.
28. Install the fuel rail and injector channel cover as an assembly. Refer to *Section 1F, Engine Controls*.
29. Connect the air intake tube and the air filter housing assembly.
30. Install the air filter housing assembly bolts.

Tighten

Tighten the air filter housing bolts to 8 N•m (71 lb•in).

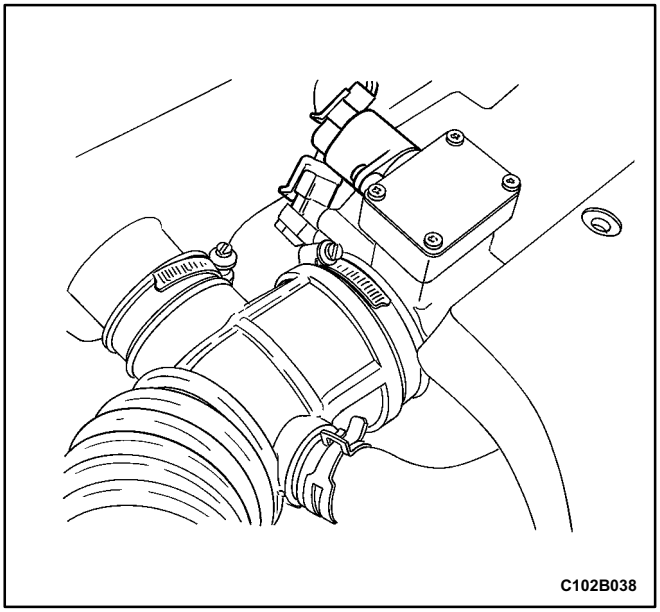

31. Connect all of the necessary vacuum lines including the brake booster vacuum hose.
32. Connect the oxygen sensor connector.
33. Connect the starter solenoid "S" terminal wire and power lead.
34. Connect the alternator voltage regulator connector.
35. Connect the coolant temperature sensor connector.
36. Connect the engine coolant temperature sensor connector.
37. Connect the throttle position sensor connector.
38. Connect the idle air control valve connector.
39. Connect the manifold air temperature sensor connector.

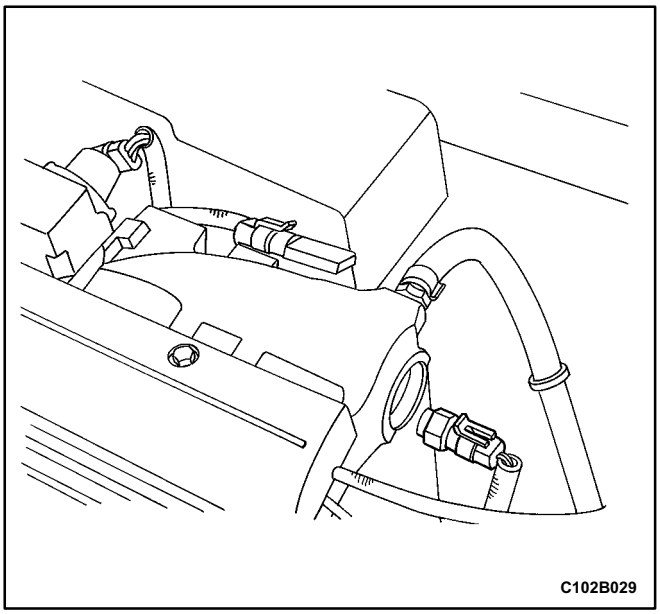

40. Connect the electrical connector at the DIS ignition coil and the ECM ground terminal.
41. Install the air intake tube between the throttle body and the air filter housing.
42. Connect the manifold air temperature sensor connector.
43. Install the cooling system radiator and the engine cooling fans. Refer to *Section 1D, Engine Cooling.*

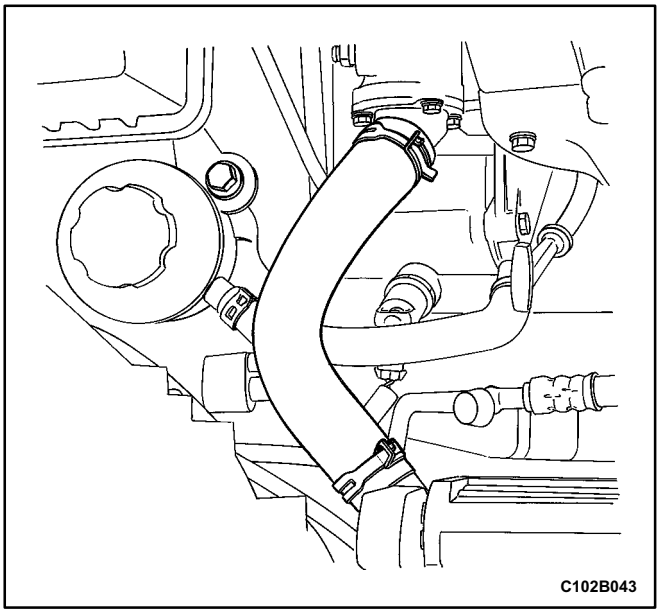

44. Connect the lower radiator hose to the coolant pipe.
45. Connect the upper radiator hose to the thermostat housing.
46. Connect the heater hoses to the coolant pipe and the coolant manifold.
47. Connect the heater outlet hose to the coolant pipe.
48. Connect the coolant surge tank hose to the coolant pipe.
49. Connect the coolant hose to the throttle body.

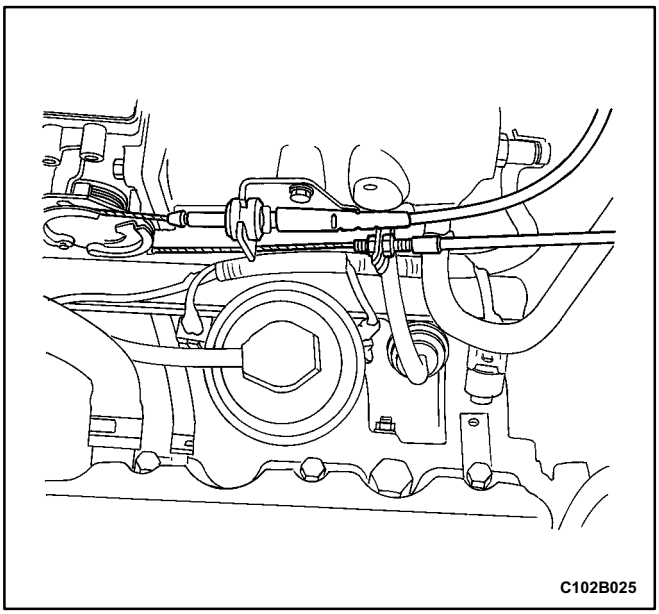

50. Connect the throttle cable to the throttle body and the intake manifold bracket.
51. Install the fuel pump fuse.
52. Connect the negative battery cable.
53. Refill the engine crankcase with engine oil.
54. Refill the engine coolant system. Refer to *Section 1D, Engine Cooling.*
55. Bleed the power steering system. Refer to *Section 6A, Power Steering*.
56. Refill the A/C refrigerant system. Refer to *Section 7B, Manual Control Heating, Ventilation, and Air Conditioning System*.
57. Install the hood. Refer to *Section 9R, Body Front End*.

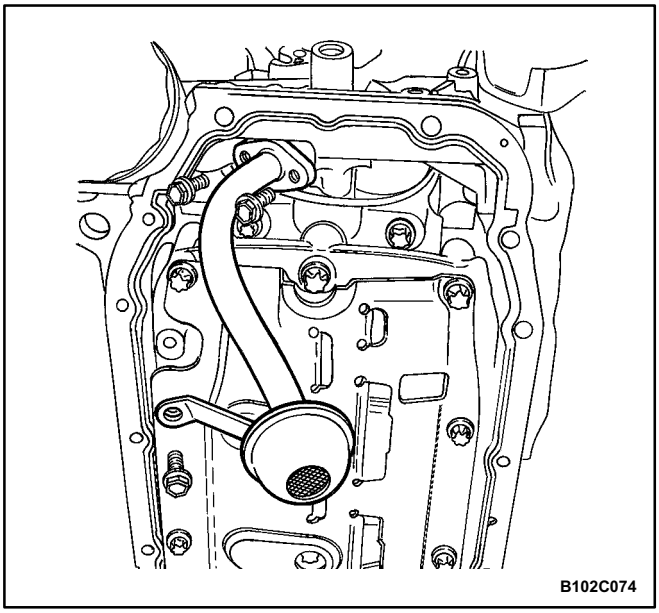

PISTONS AND RODS

Tools Required

J-8037 Universal Piston Ring Compressor
J-8087 Cylinder Bore Check Gauge
KM-427 Piston Pin Service Set
KM-470-B Angular Torque Gauge

Removal Procedure

1. Remove the cylinder head with the intake manifold and exhaust manifold attached. Refer to "Cylinder Head and Gasket" in this section.
2. Remove the oil pan. Refer to "Oil Pan" in this section.
3. Remove the oil pump/pickup tube bolts.
4. Remove the oil pump/pickup tube.
5. Remove the engine block lower support and the splash shield bolts.
6. Remove the engine block lower support and the splash shield.

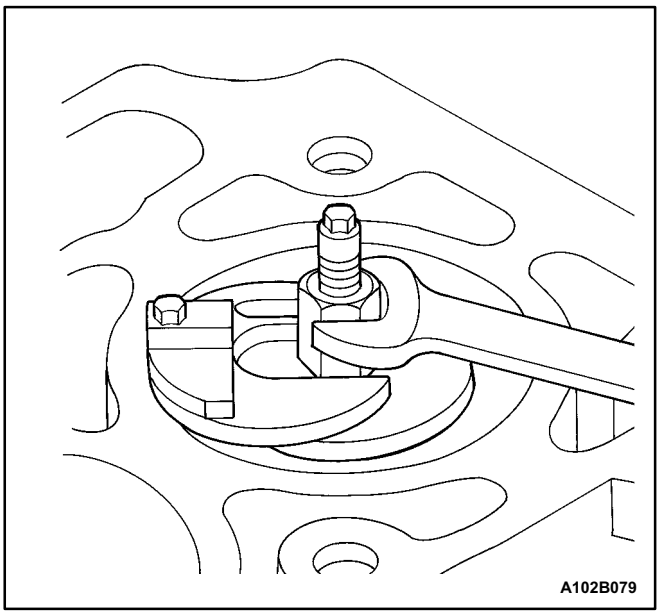

7. Move the piston to the bottom of the piston stroke.
8. Mark the connecting rod cap for position.
9. Remove the connecting rod cap bolts.
10. Remove the connecting rod cap and lower connecting rod bearing.
11. Remove the upper piston connecting rod bearing.
12. Ridge ream the cylinder wall.

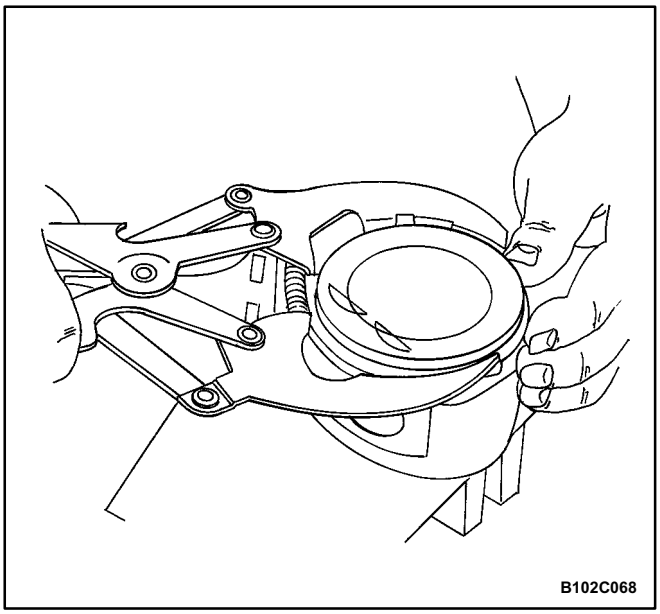

Caution: Use care when handling the piston. Worn piston rings are sharp and may cause injury.

13. Remove the piston.
14. Use a piston ring expander tool to expand the piston rings.
15. Remove the piston rings.

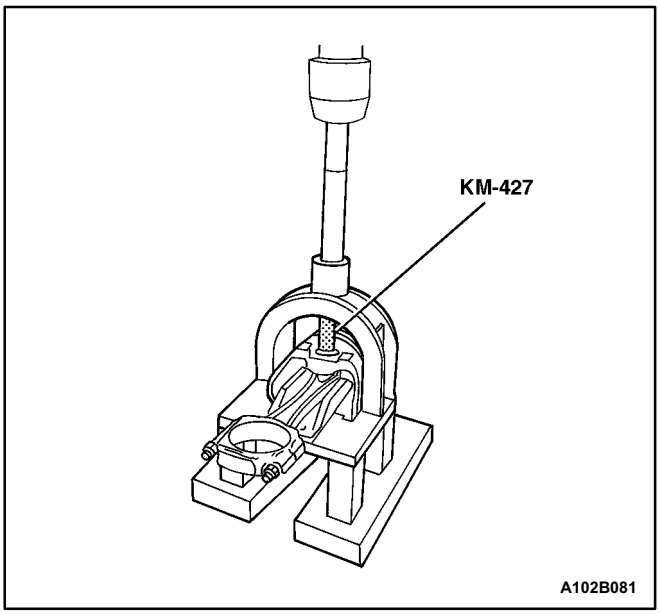

16. Remove the piston pin from the piston and connecting rod assembly using the piston pin service set KM-427.
17. Separate the piston from the connecting rod.

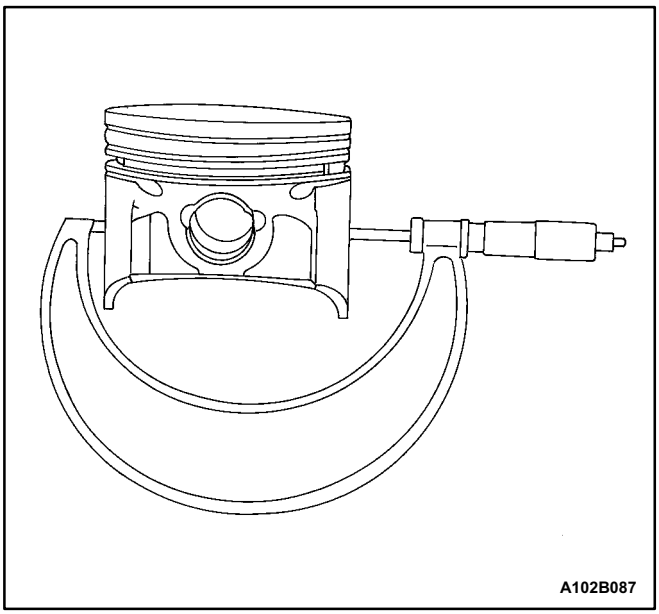

Inspection Procedure

1. Inspect the connecting rod for bending or twisting. If the connecting rod is bent or twisted, replace the connecting rod.
2. Inspect the connecting rod bearings.
3. Inspect the connecting rod lower end for wear.
4. Inspect the connecting rod upper end for scoring.
5. Inspect the crankshaft rod bearing journal for wear. Refer to "Engine Specifications" in this section.
6. Inspect the piston for scoring, cracks, and wear.
7. Inspect the piston for taper using a micrometer.

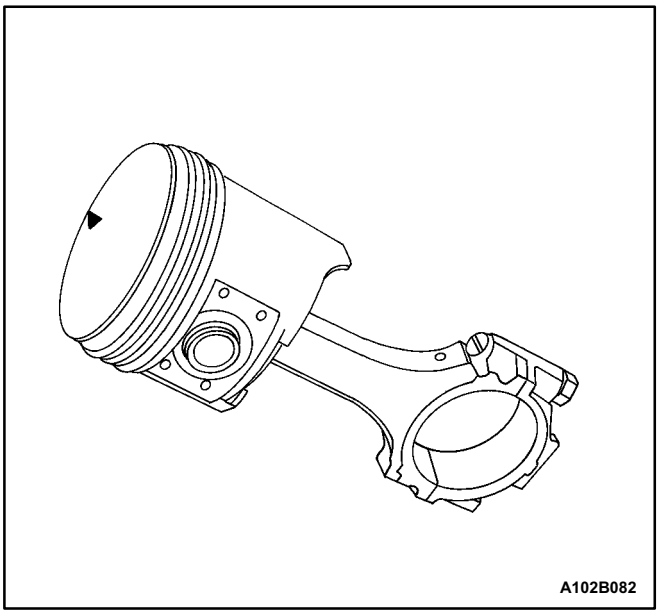

8. Inspect the piston for fit to the connecting rod.

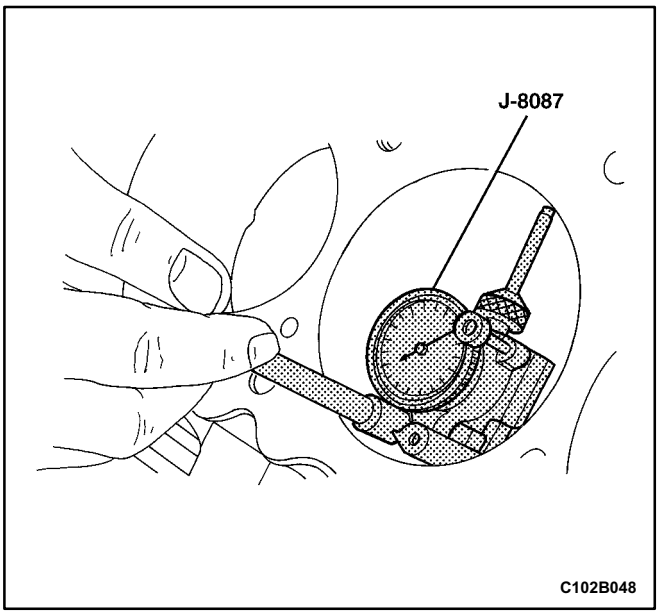

9. Inspect the engine block deck surface for flatness using a straight edge and a feeler gauge. Refer to "Engine Specifications" in this section.
10. Inspect the bearing bore for concentricity and alignment using the cylinder bore check gauge J-8087. Refer to "Engine Specifications" in this section. If the bearing bore is beyond specifications, replace the engine block.
11. Inspect the engine block cylinder bore for wear, runout, ridging and taper using a bore gauge. Refer to "Engine Specifications" in this section.
12. Inspect the engine block cylinder bore for glazing. Lightly hone the cylinder bore as necessary.

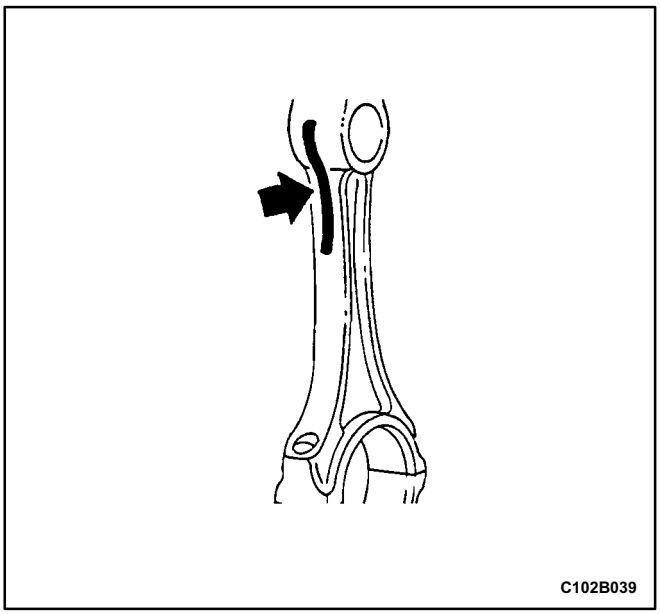

Installation Procedure

Important: In order to install the piston pin, heat the connecting rod to approximately 280°C (536°F) using a hot plate. This temperature must not be exceeded. Use thermocolor pencil to determine the temperature. When the color changes from green to black, the temperature is reached.

1. Align the notch on the piston and connecting rod so that the proper sides will be facing the front of the engine.
2. Install the piston pin guide through the piston and the connecting rod.
3. Coat the piston pin with clean oil.
4. Install the piston pin into the opposite side of the piston.

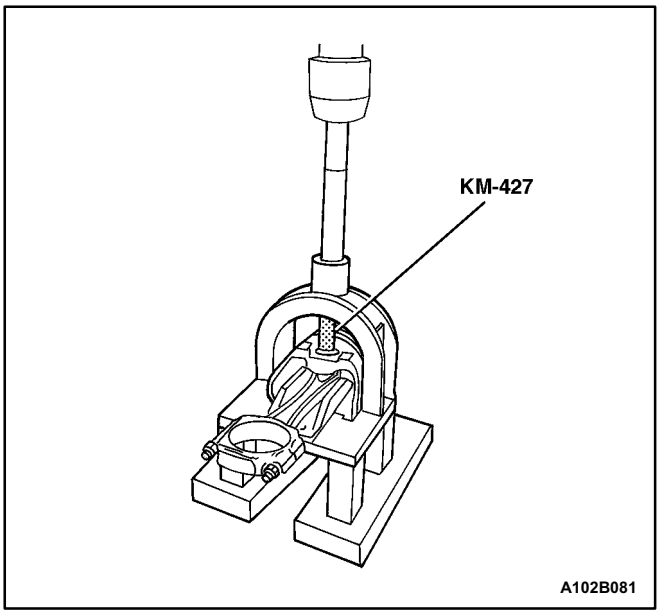

5. Install the piston pin into the piston and connecting rod assembly using the piston pin service set KM-427.

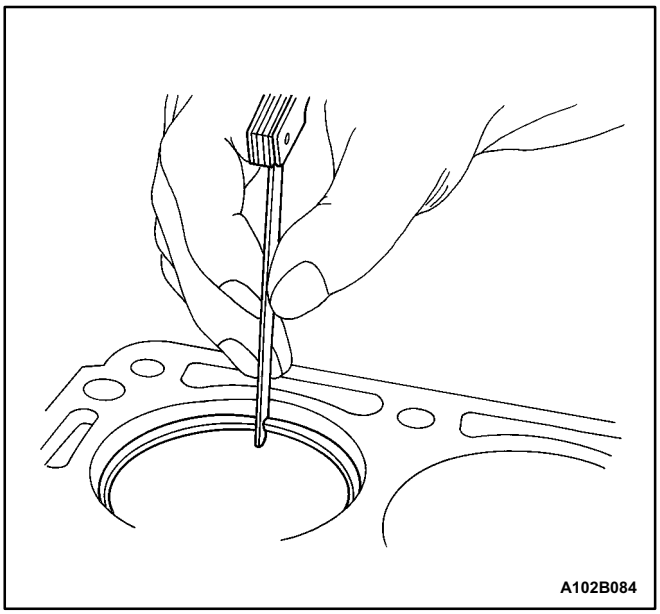

6. Select a set of new piston rings.
7. Measure the piston ring gap using a feeler gauge. Refer to "Engine Specifications" in this section.
8. Increase the piston ring gap by carefully filing off excess material if the piston ring gap is below specifications.

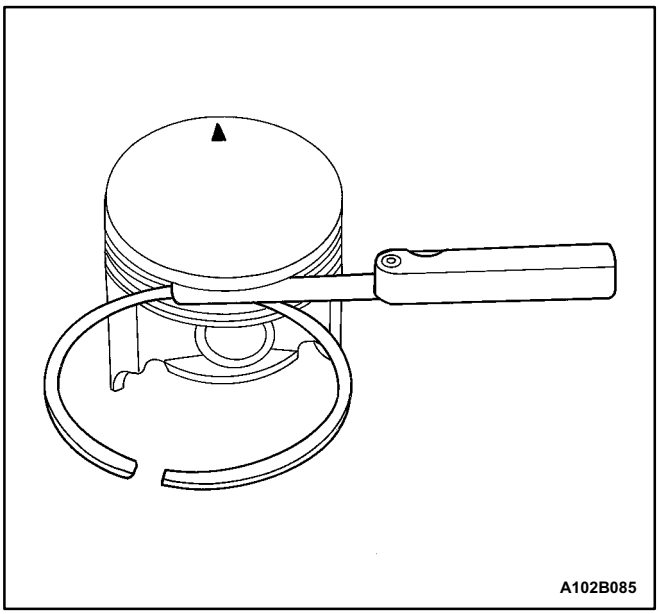

9. Measure the piston ring side clearance using a feeler gauge. Refer to "Engine Specifications" in this section.
10. If the piston ring is too thick, try another piston ring.
11. If no piston ring can be found that fits to specifications, the piston ring may be ground to size with emery paper placed on a sheet of glass.

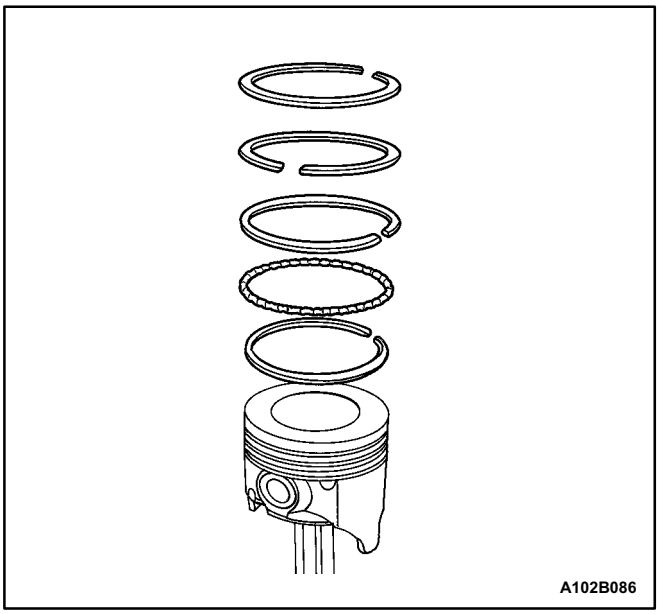

12. Install a piston oil ring, the expander, then the second piston oil ring to the bottom ring groove of the piston.
13. Install the second compression ring to the middle ring groove of the piston.
14. Install the top compression ring to the top ring groove of the piston.

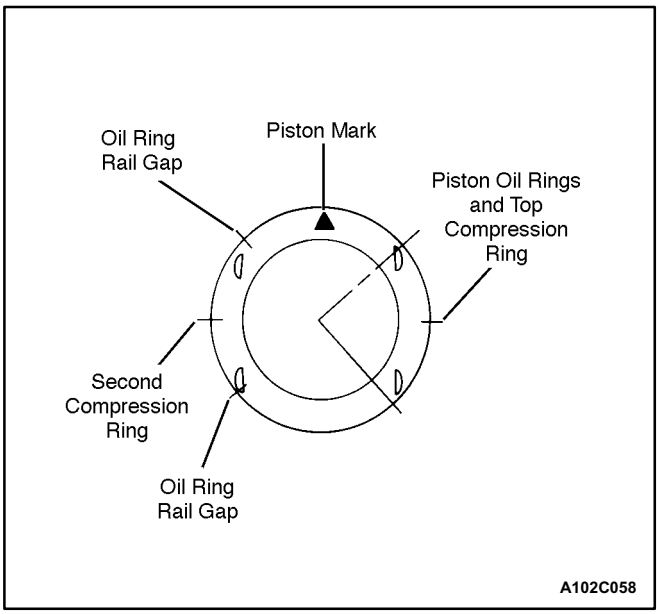

15. Use a piston ring expander to install the piston rings. Do not expand the piston rings beyond the expansion necessary for installation.
16. Stagger the piston oil rings, the oil ring rail gaps, the second compression ring, and the top compression ring in relation to the notch on the top of the piston.

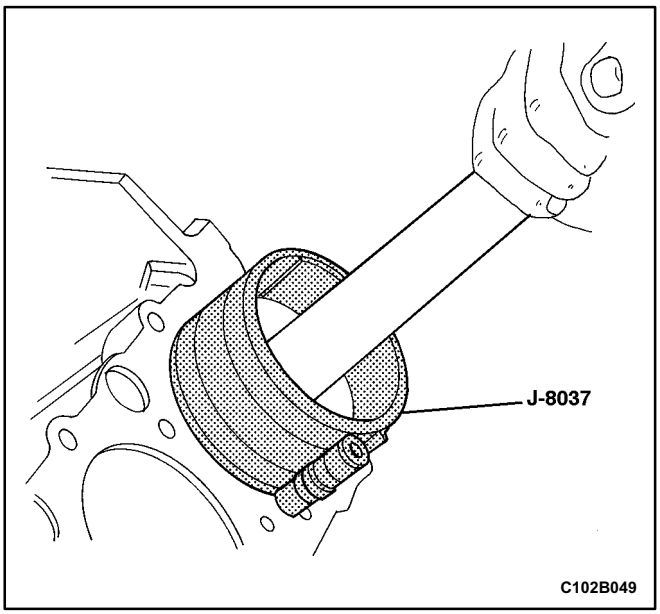

17. Lubricate the cylinder wall and the piston rings with clean engine oil.
18. Install the piston using the universal piston ring compressor J-8037 and a wood handle. Guide the lower connecting rod end to prevent damaging the crankshaft journal.
19. Install the connecting rod cap and bearings. Refer to "Crankshaft Bearings and Connecting Rod Bearings - Gauging Plastic" in this section.

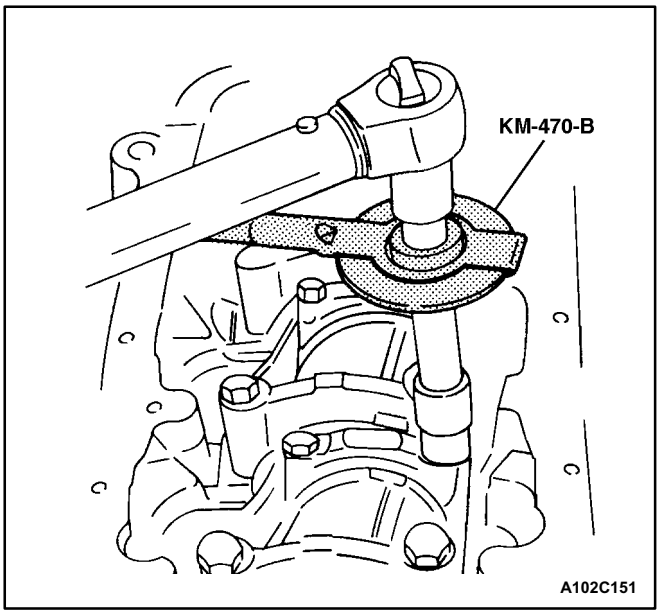

20. Install the connecting rod bearing cap bolts.

Tighten

Tighten the connecting rod bearing cap bolts to 35 N•m (26 lb•ft). Using the angular torque gauge KM-470-B, tighten the bolts one turn of 45 degrees plus one turn of 15 degrees.

21. Install the engine block lower support bracket and splash shield bolts.

Tighten

Tighten the engine block lower support bracket and splash shield bolts to 40 N•m (30 lb•ft).

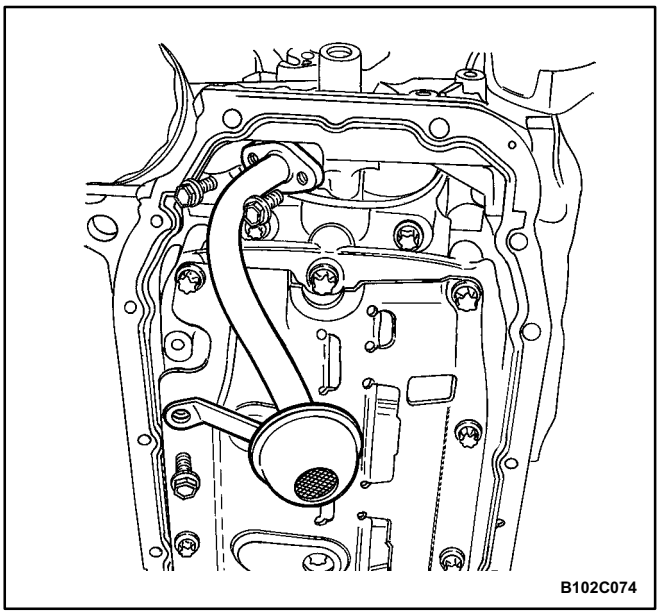

22. Install the oil pump/pickup tube.
23. Install the oil pump/pickup tube bolts.

Tighten

Tighten the oil pump/pickup tube bolts to 8 N•m (71 lb•in).

24. Install the oil pan. Refer to "Oil Pan" in this section.
25. Install the cylinder head with the intake manifold and exhaust manifold attached. Refer to "Cylinder Head and Gasket" in this section.

UNIT REPAIR

CYLINDER HEAD AND VALVE TRAIN COMPONENTS

Tools Required

MKM-571-B Gauge
KM-340-0 Cutter Set
  KM-340-7 Guide Drift
  KM-340-13 Cutter
  KM-340-26 Cutter
KM-348 Valve Spring Compressor
KM-512 Valve Stem Projection Gauge
KM-664 Valve Guide Reamer Set
  KM-253 Reamer
  KM-254 Reamer
  KM-255 Reamer

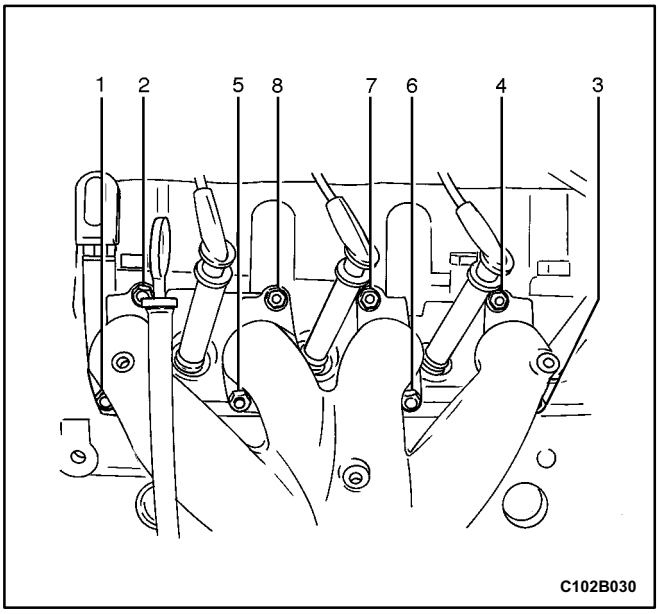

Disassembly Procedure

1. Remove the cylinder head with the intake manifold and the exhaust manifold attached. Refer to "Cylinder Head and Gasket" in this section.
2. Remove the coolant temperature sensor.
3. Remove the exhaust manifold heat shield bolts.
4. Remove the exhaust manifold heat shield.
5. Remove the exhaust manifold retaining nuts in the sequence shown.
6. Remove the exhaust manifold.
7. Remove the exhaust manifold gasket.
8. Remove the exhaust manifold studs.

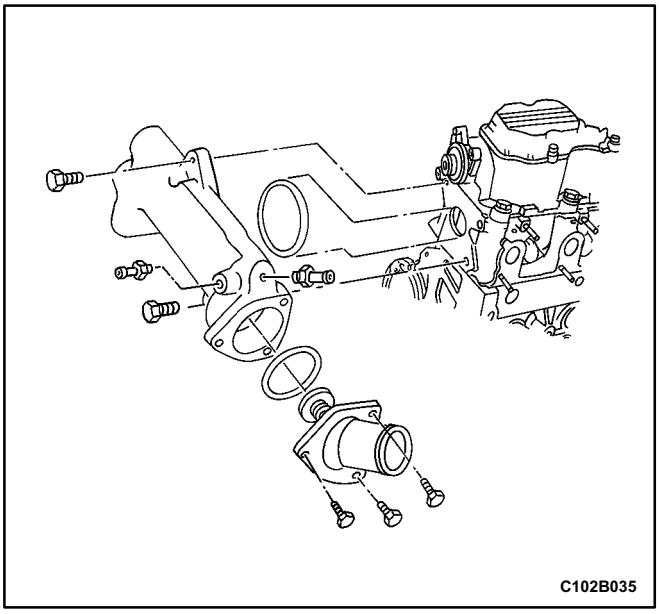

9. Remove the thermostat housing mounting bolts.
10. Remove the thermostat housing assembly.
11. Remove the fuel rail assembly. Refer to *Section 1F, Engine Controls*.
12. Remove the coolant manifold mounting bolts and the housing.

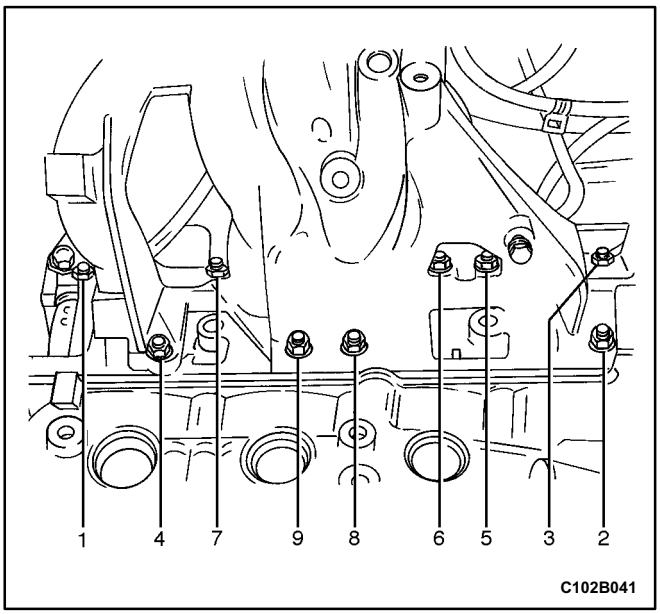

13. Remove the intake manifold retaining nuts in the sequence shown.
14. Remove the intake manifold.
15. Remove the intake manifold gasket.

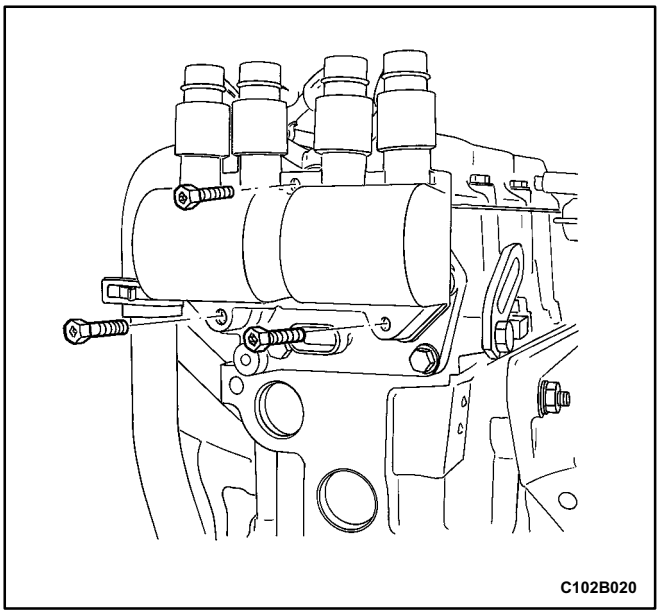

16. Remove the DIS ignition coil mounting bolts.
17. Remove the DIS ignition coil ignition wires.
18. Remove the intake manifold studs.
19. Remove the spark plugs.

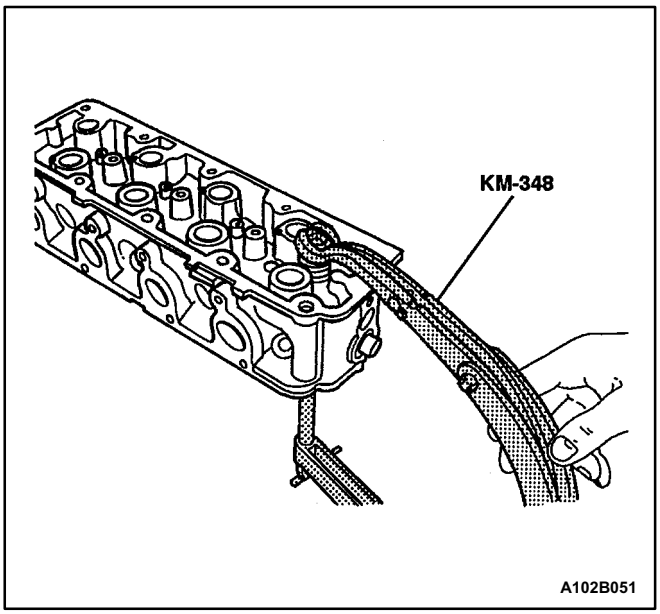

20. Compress the valve springs with the valve spring compressor KM-348.
21. Remove the valve retainers.
22. Remove the valve spring compressor KM-348.
23. Remove the valve spring caps.
24. Remove the valve springs. Maintain the original position of the valve springs for installation.
25. Remove the valves. Maintain the original position of the valves for installation.
26. Remove the valve stem seals.
27. Remove the camshaft carrier alignment pins.

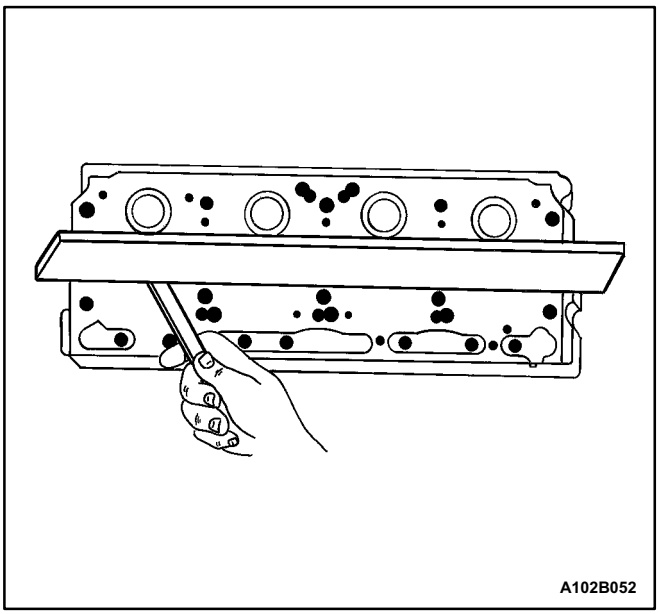

Cylinder Head Inspection

1. Clean the sealing surfaces.
2. Inspect the cylinder head gasket and mating surfaces for leaks, corrosion and blowby.
3. Inspect the cylinder head for cracks.
4. Inspect the length and width of the cylinder head using a feeler gauge and a straight edge.
5. Check the sealing surfaces for deformation and warpage. The cylinder head sealing surfaces must be flat within 0.025 mm (0.001 inch) maximum.

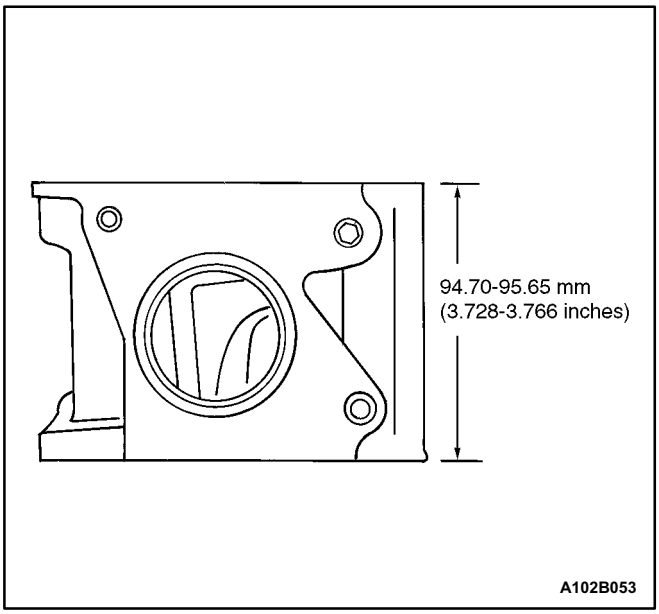

6. Measure the height of the cylinder head from seal ing surface to sealing surface. The cylinder head height should be 94.70 to 95.65 mm (3.728 to 3.766 inches). If the cylinder head height is less than 94.70 mm (3.728 inches), replace the cylinder head.
7. Inspect all threaded holes for damage.
8. Inspect the valve seats for excessive wear and burned spots.

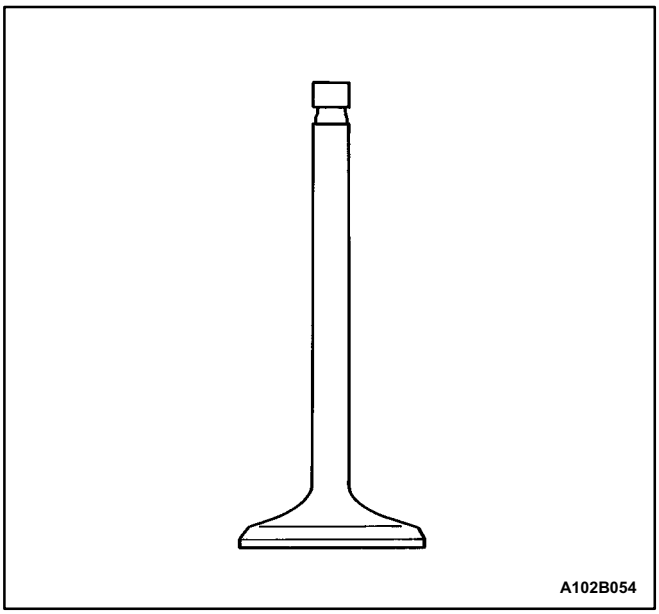

Valve Inspection

1. Inspect valve stem tip wear.
2. Inspect the valve retainer grooves and oil seal grooves for chips and wear.
3. Inspect the valves for burns or cracks.
4. Inspect the valve stem for burrs and scratches.
5. Inspect the valve stem. The valve stem must be straight.
6. Inspect the valve face for grooving. If the groove is so deep the refacing would result in a sharp edge, replace the valve.
7. Inspect the valve spring. If the valve spring ends are not parallel, replace the valve spring.
8. Inspect the valve spring seating surface of the valve rotators for wear or gouges. Replace as required.

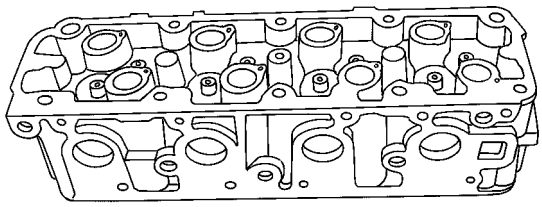

A102B055

Cleaning Procedure

1. Clean the cylinder head.
2. Clean the valve guides.
3. Clean all of the threaded holes.
4. Clean the valves of carbon, oil, and varnish.

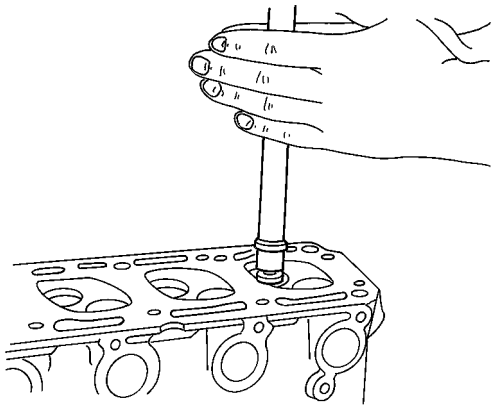

A102B056

Cylinder Head Overhaul

Valve Grind-in

1. Lubricate the valve stem using a fine-grained paste.
2. Lift the valve rhythmically from the seat with a commercially available valve grinding tool in order to distribute the paste.

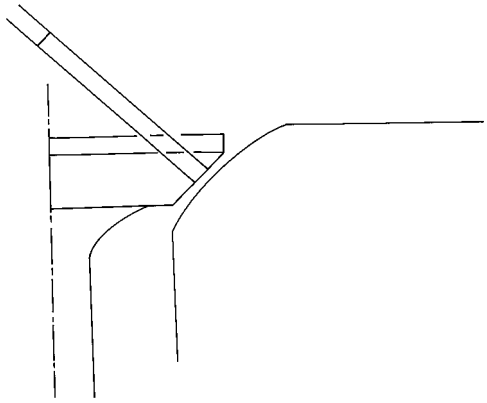

A102B057

3. Check the contact pattern on the valve head and in the cylinder head.
4. Clean the valves, the valve guides, and the cylinder head.

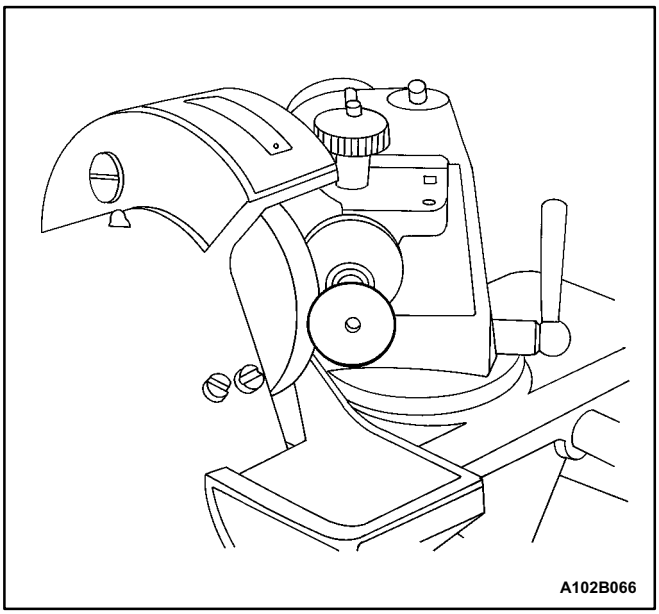

Valve Grind

1. Ensure that there are no crater line burns on the valve cone.
2. The valve may be reground only two times. Do not grind the valve stem end.
3. Ensure that the angle at the valve face is 45 degrees.
4. Inspect the assembly height of the intake valves and the exhaust valves.

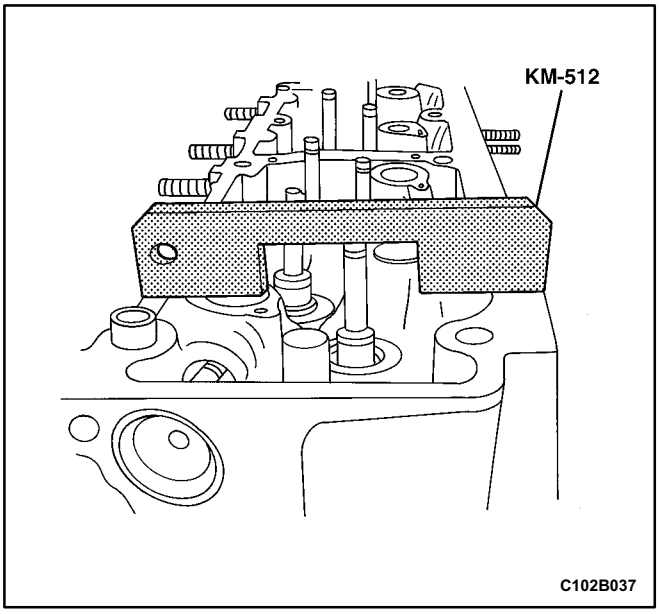

5. Check the valve stem projection using valve stem projection gauge KM-512.

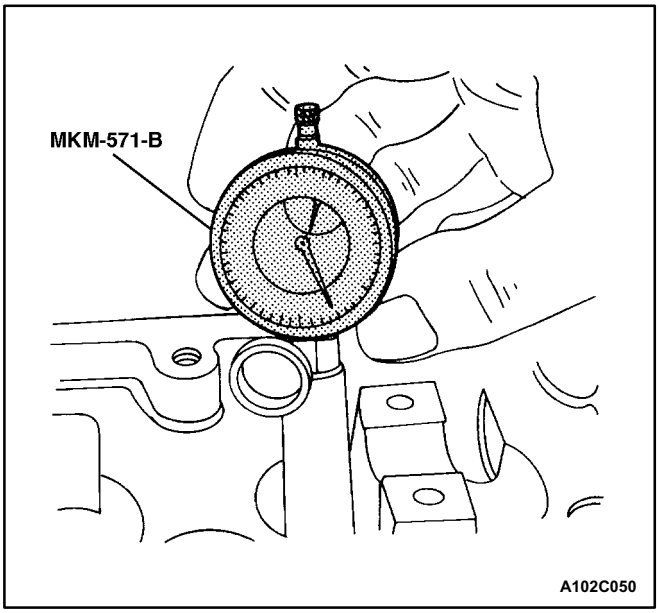

Valve Guide - Ream

1. Measure the diameter of the valve guide using gauge MKM-571-B and a commercially available inside micrometer.

Important: Valve oversizes may already have been fitted in production.

2. An oversize code is on the valve guide and the valve stem end. The following table gives the correct size, reamer, and production code for each service code.

Size	Reamer	Production Code	Service Code
Normal		-	K
0.075	KM-253	1	K1
0.150	KM-254	2	K2
0.250	KM-255		A

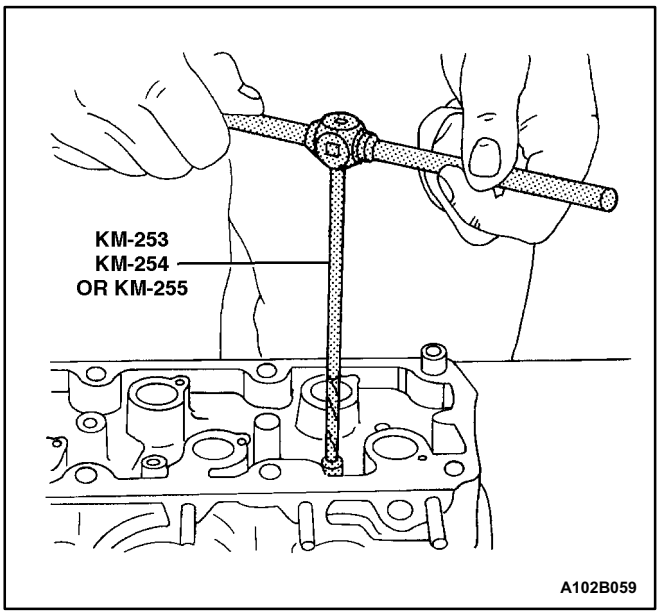

3. Ream the valve guide from the upper side of the cylinder head to the next oversize.
4. After reaming, cross out the code and emboss the valve guide with the new code.

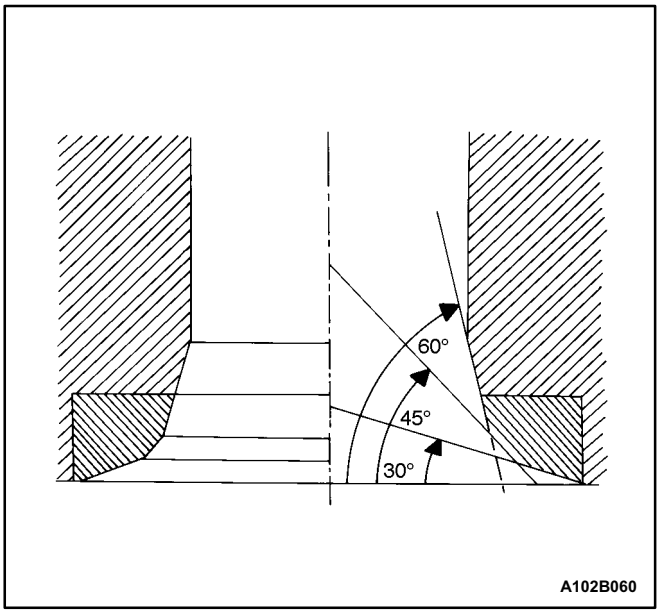

Valve Seat - Cut

1. Place the cylinder head on wooden blocks.
2. Cut the intake and the exhaust valve seats using the guide drift KM-340-7 as follows:
   - Valve seat: A 45 degree surface using cutter KM-340-13.
   - Upper correction angle: A 30-degree surfaced using cutter KM-340-13.
   - Lower correction angle: A 60 degree surface using cutter KM-340-26.

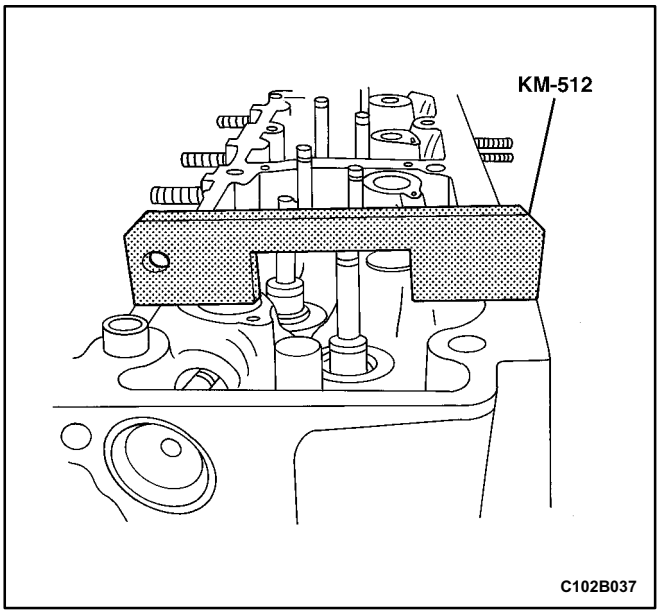

3. Clean the chippings from the cylinder head.
4. Inspect the dimension for the valve seat width.
   - Intake: 1.2 to 1.4 mm (0.047 to 0.055 inch).
   - Exhaust: 1.4 to 1.8 mm (0.055 to 0.070 inch).
5. Inspect the assembly height of the intake valves and the exhaust valves. If the dimension is exceeded, install new valves. Inspect the assembly height of the intake valves and the exhaust valves again. If the valve assembly height is still too large despite replacing the valves, replace the cylinder head.
6. If the dimension is exceeded, install new valves and then check the valve stem projection again. Refer to "Valve-Grind" and "Valve Grind-In" in this section.
7. If the valve stem projection is still too large despite replacing the valves, replace the cylinder head.

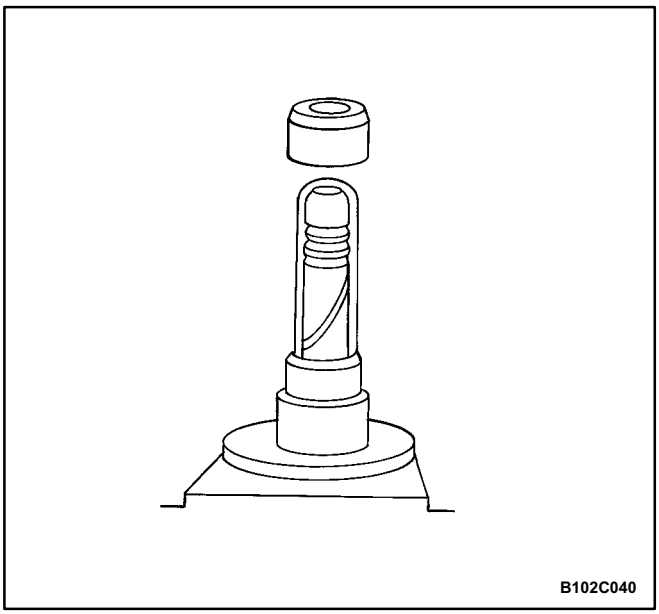

Assembly Procedure

1. Coat the valves with engine oil.
2. Insert the valves in the cylinder head in their original positions.
3. Insert the valve spring seats.
4. Push the accompanying assembly sleeve onto the valve stem.
5. Insert the new valve stem seat.
6. Carefully drive the valve stem seal onto the stop with light taps.
7. Install the valve springs in their original positions.
8. Install the valve spring caps.

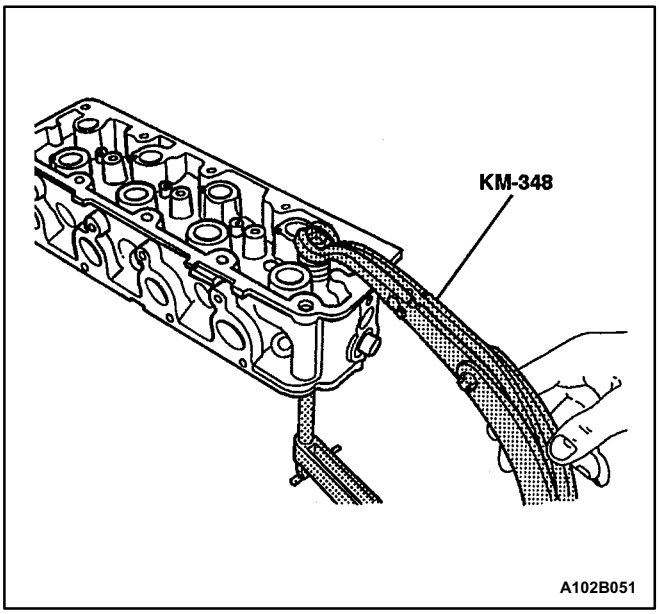

9. Compress the valve springs with the valve spring compressor KM-348.
10. Install the valve retainers.
11. Remove the valve spring compressor KM-348.
12. Lubricate the valve lash adjusters with engine oil.
13. Install the valve lash adjusters.

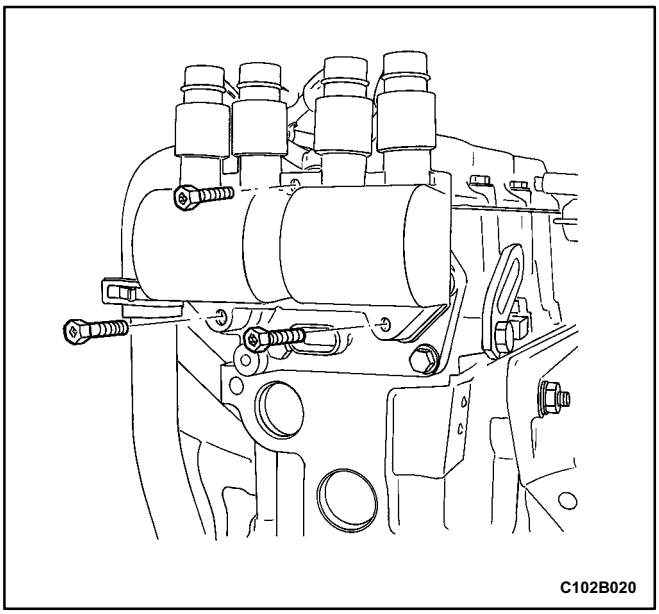

14. Install the spark plugs.

Tighten

Tighten the spark plugs to 20 N•m (15 lb•ft).

15. Install the DIS ignition coil mounting bracket.
16. Install the DIS ignition coil mounting bracket bolts.

Tighten

Tighten the DIS ignition coil mounting bracket bolts to 10 N•m (89 lb•in).

17. Install the coolant temperature sensor.

Tighten

Tighten the coolant temperature sensor to 25 N•m (18 lb•ft).

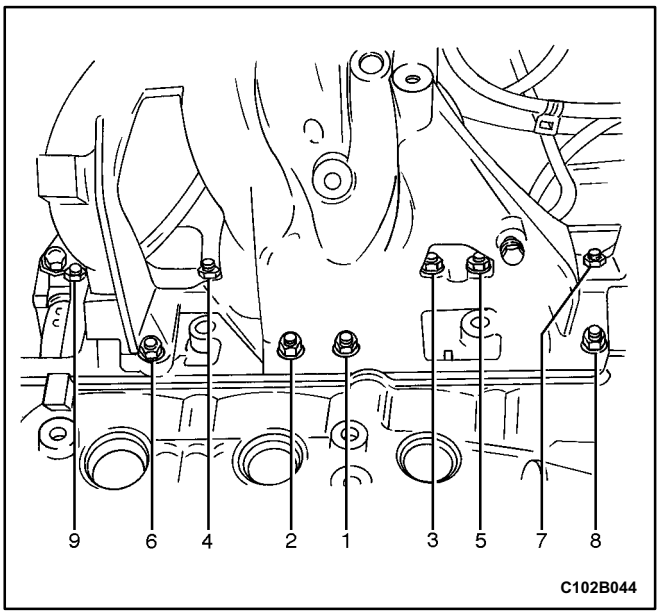

18. Install the intake manifold studs.
19. Install the intake manifold gasket.
20. Install the intake manifold.
21. Install the intake manifold retaining nuts in the sequence shown.

Tighten

Tighten the intake manifold retaining nuts to 22 N•m (16 lb•in).

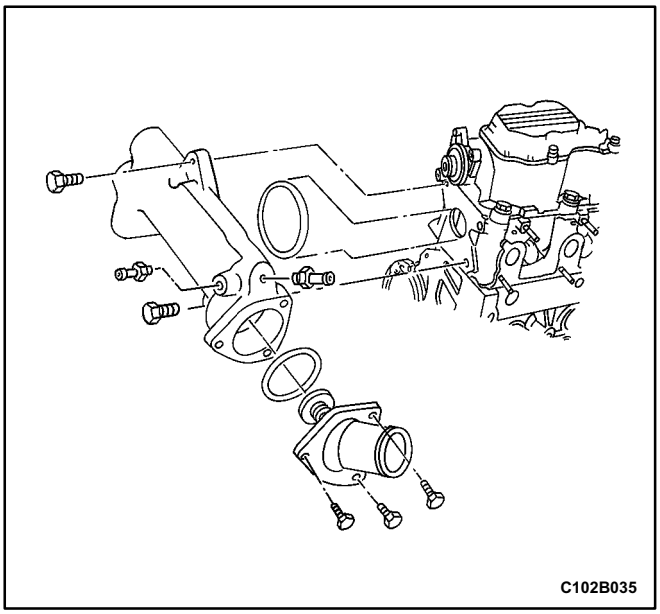

22. Install the fuel rail assembly. Refer to *Section 1F, Engine Controls*.
23. Install the coolant manifold assembly.
24. Install the coolant manifold mounting bolts.

Tighten

Tighten the coolant manifold mounting bolts to 15 N•m (11 lb•ft).

25. Install the thermostat housing and mounting bolts.

Tighten

Tighten the thermostat housing mounting bolts to 15 N•m (11 lb•ft).

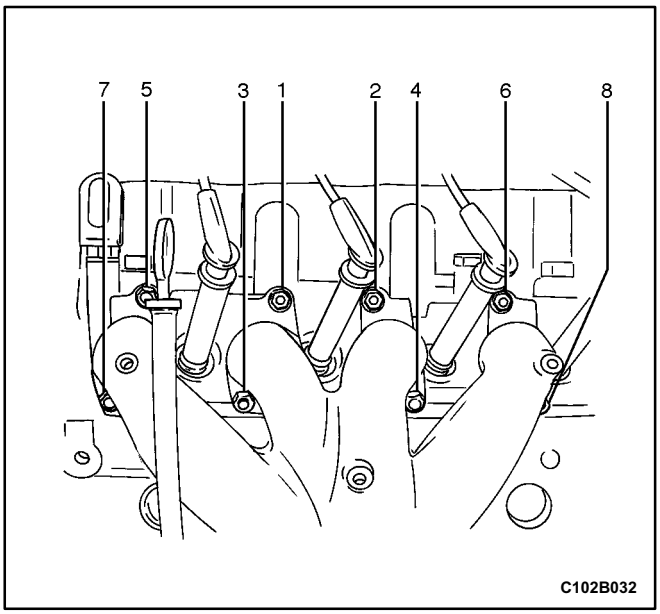

26. Install the exhaust manifold studs.
27. Install the exhaust manifold gasket.
28. Install the exhaust manifold.
29. Install the exhaust manifold retaining nuts in the sequence shown.

Tighten

Tighten the exhaust manifold retaining nuts to 22 N•m (16 lb•ft).

30. Install the exhaust manifold heat shield.
31. Install the exhaust manifold heat shield bolts.

Tighten

Tighten the exhaust manifold heat shield bolts to 8 N•m (71 lb•in).

32. Install the cylinder head with the intake manifold and the exhaust manifold attached. Refer to "Cylinder Head and Gasket" in this section.

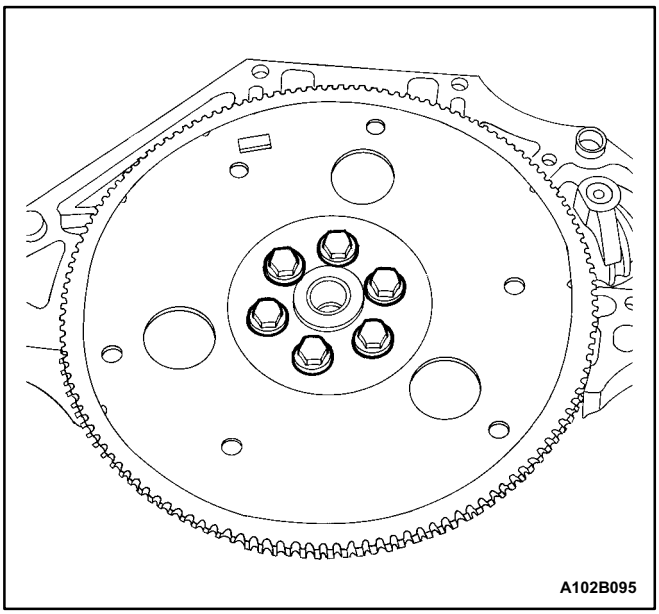

CRANKSHAFT

Tools Required

KM-412 Engine Overhaul Stand

KM-470-B Angular Torque Gauge

J-36792 or KM-635 Crankshaft Rear Oil Seal Installer

Notice: Take extreme care to prevent any scratches, nicks or damage to the camshafts. Such damage can cause premature engine wear.

Disassembly Procedure

1. Remove the engine. Refer to ``Engine'' in this section.
2. Remove the flywheel bolts or the flexible plate bolts.
3. Remove the flywheel or the flexible plate.

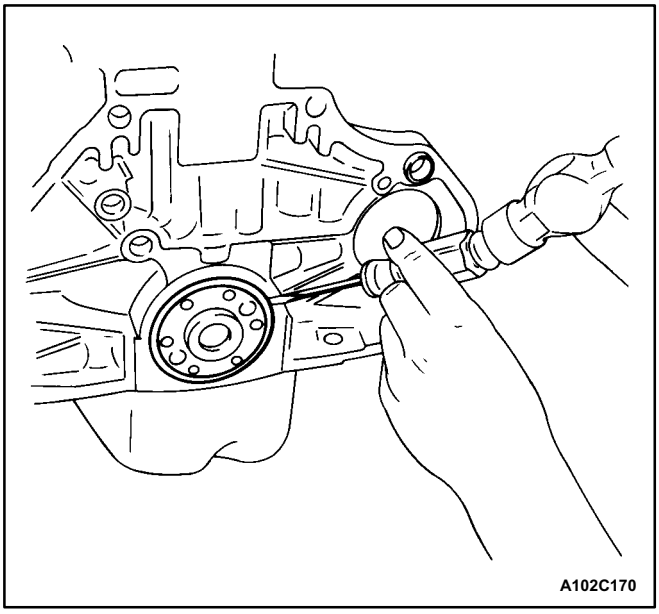

4. Remove the crankshaft rear oil seal.
5. Mount the engine assembly on the engine overhaul stand KM-412.

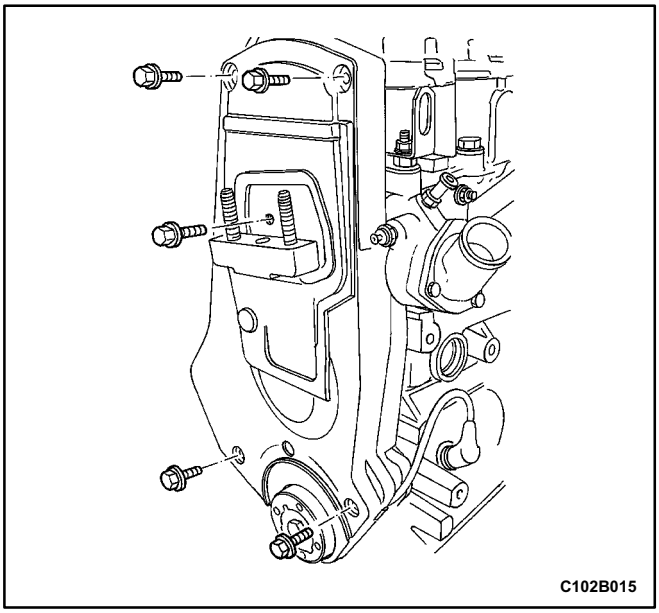

6. Remove the front timing belt cover bolts.
7. Remove the front timing belt cover.
8. Remove the crankshaft pulley bolts.
9. Remove the crankshaft pulley.

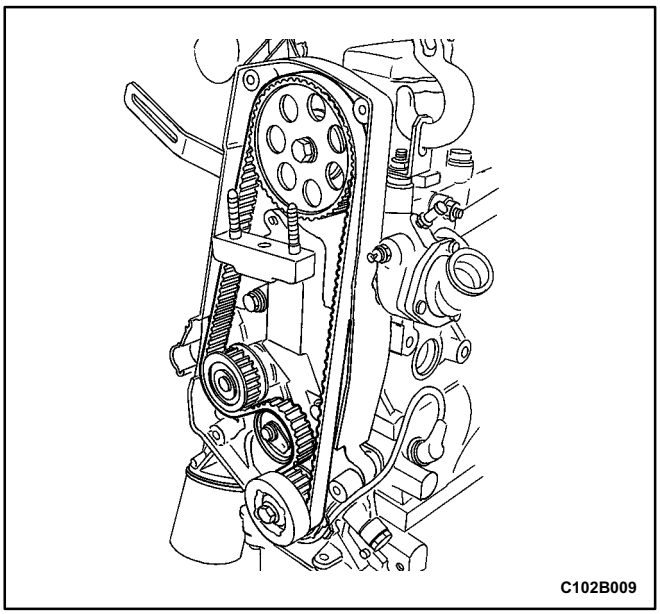

10. Loosen the timing belt automatic tensioner bolt.
11. Rotate the timing belt automatic tensioner hexkey clockwise to release the tension.
12. Remove the timing belt.
13. Remove the right side engine mount retaining bolts/nuts.
14. Remove the right side engine mount.

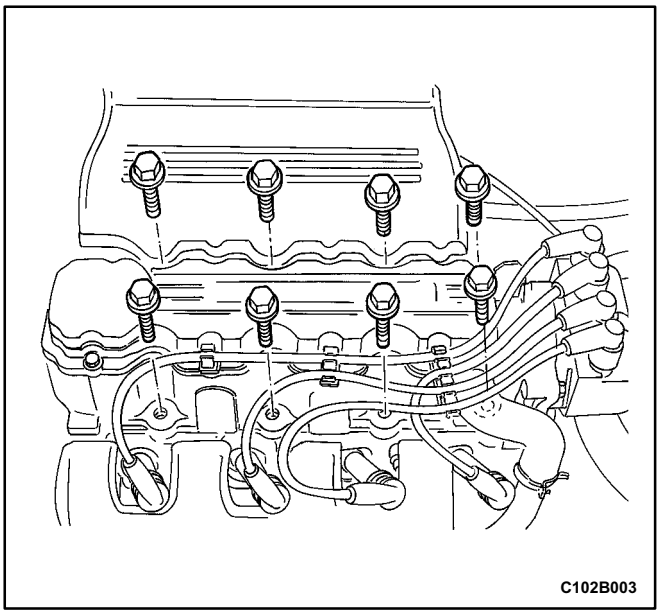

15. Disconnect the crankcase breather tubes from the valve cover.
16. Disconnect the ignition wires from the spark plugs.
17. Remove the valve cover bolts.
18. Remove the valve cover and the valve cover gasket.

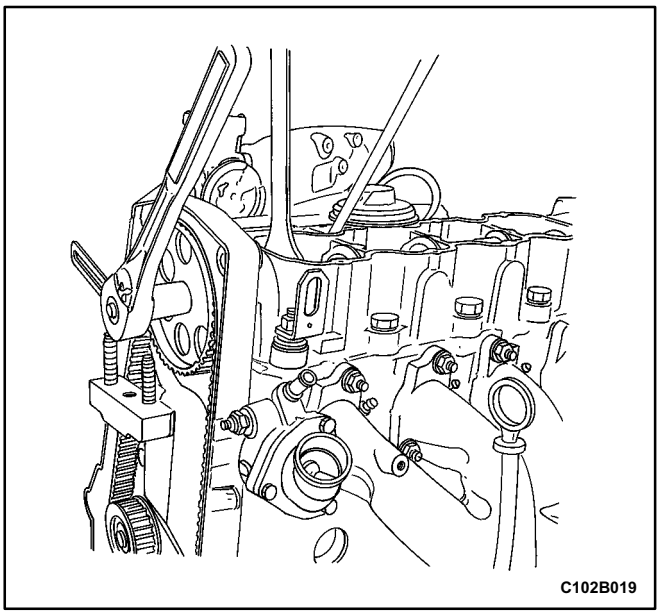

Notice: Take extreme care to prevent any scratches, nicks or damage to the camshaft. Such damage can cause premature engine wear.

19. While holding the camshaft firmly in place, remove the camshaft bolt.
20. Remove the camshaft gear.

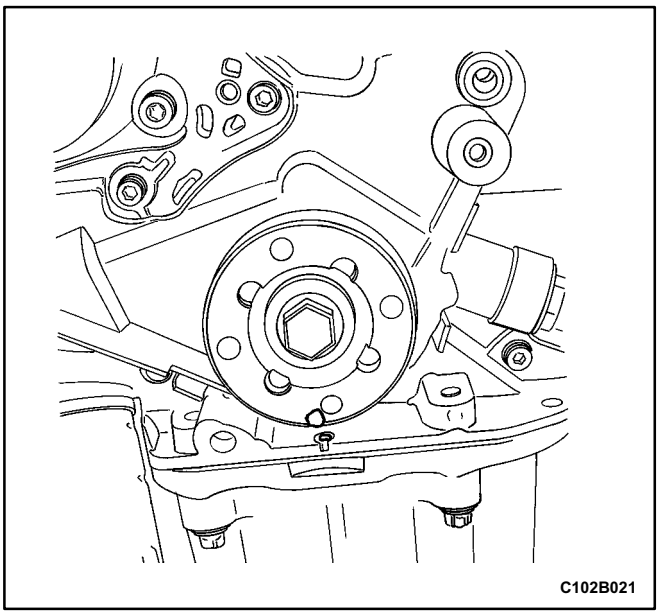

21. Remove the crankshaft timing belt gear.

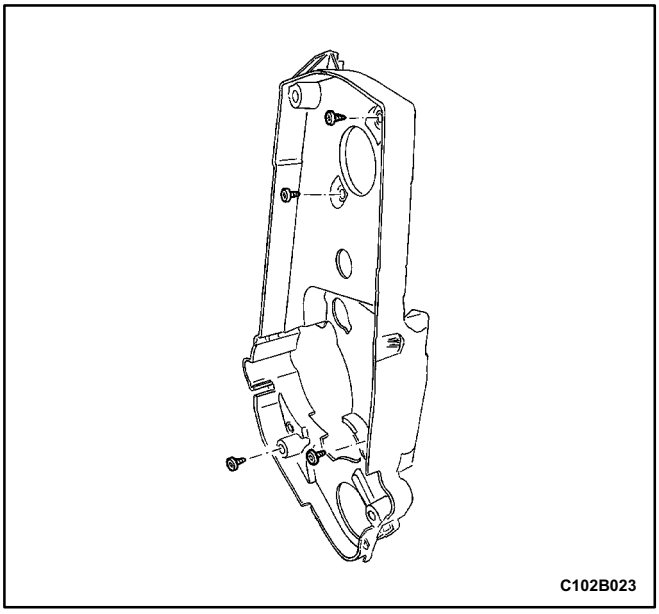

Important: Remove the knock sensor wire from its track prior to removing the rear timing belt cover.

22. Remove the rear timing belt cover bolts and the rear timing belt cover.

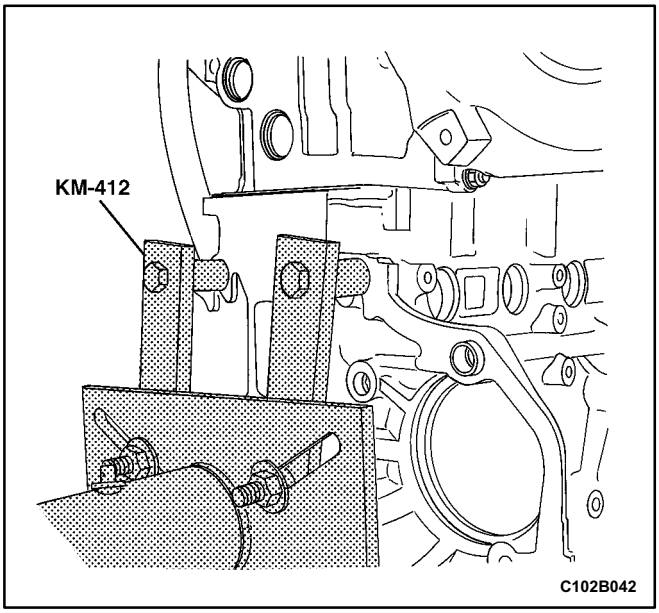

23. Rotate the engine on the engine overhaul stand KM-412.

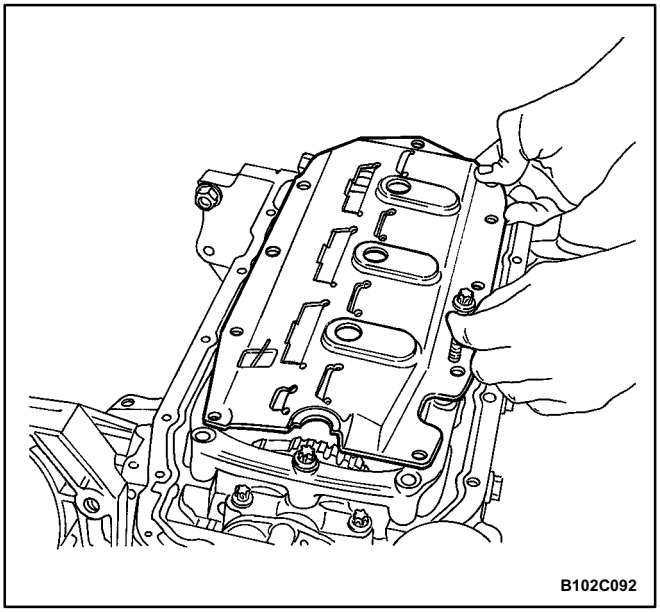

24. Remove the oil pan retaining bolts.
25. Remove the oil pan.
26. Remove the oil pump/pickup tube bolts.
27. Remove the oil pump/pickup tube.
28. Remove the engine block lower support bracket splash shield bolts.
29. Remove the splash shield.
30. Remove the engine block lower support bracket bolts.
31. Remove the engine block lower support bracket.

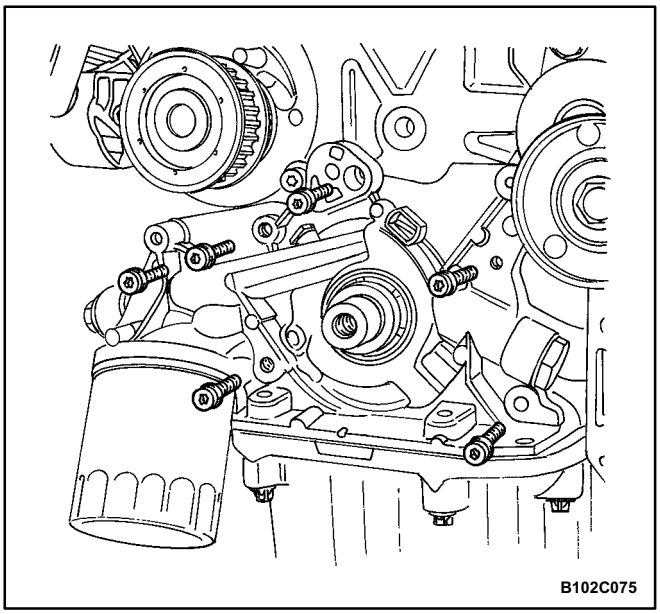

32. Remove the oil pump retaining bolts.
33. Remove the oil pump.

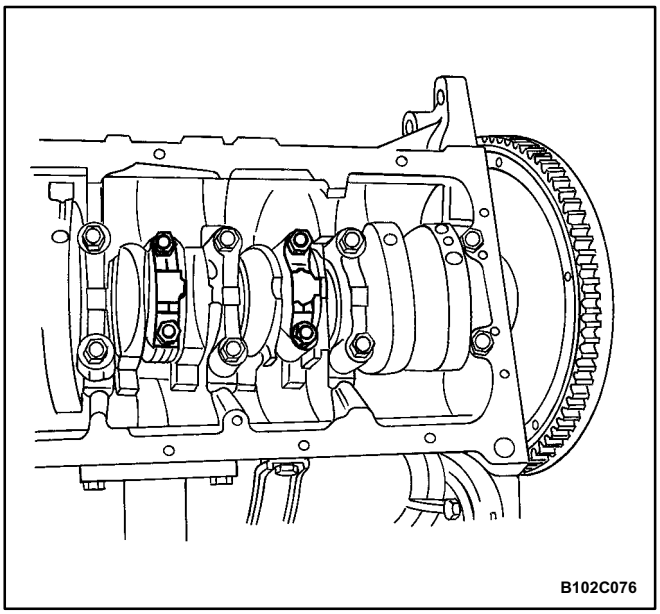

34. Mark the order of the rod bearing caps.
35. Remove the connecting rod cap bolts for all of the pistons.
36. Remove the connecting rod bearing caps and the lower connecting rod bearings.

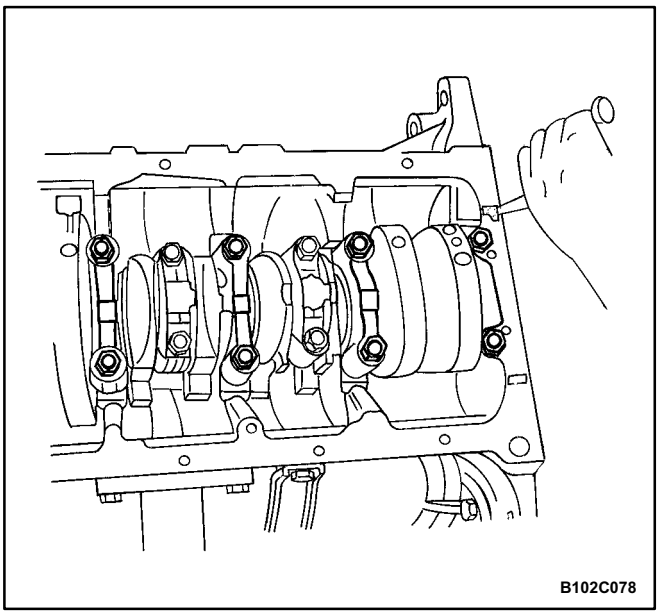

37. Mark the order of the crankshaft bearing caps.
38. Remove the crankshaft bearing cap bolts.
39. Remove the crankshaft bearing caps and the lower crankshaft bearings.
40. Remove the crankshaft.
41. Clean the parts as needed.

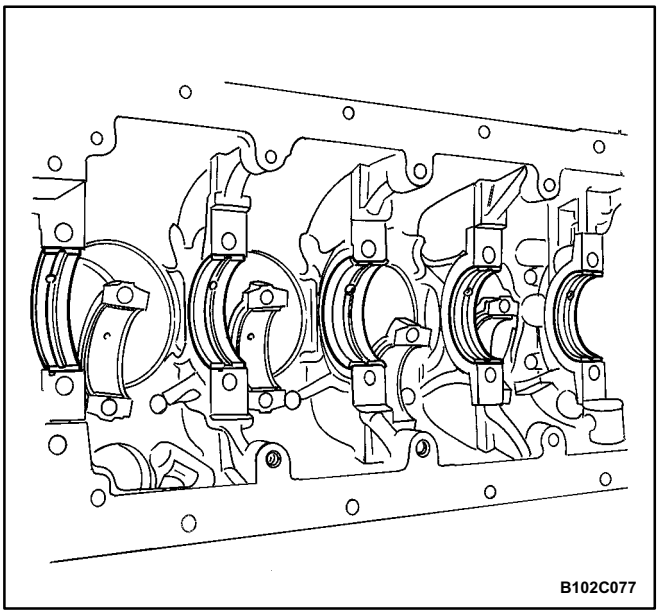

Assembly Procedure

1. Coat the crankshaft bearings with engine oil.
2. If replacing the crankshaft, transfer the pulse pickup sensor disc to the new crankshaft.

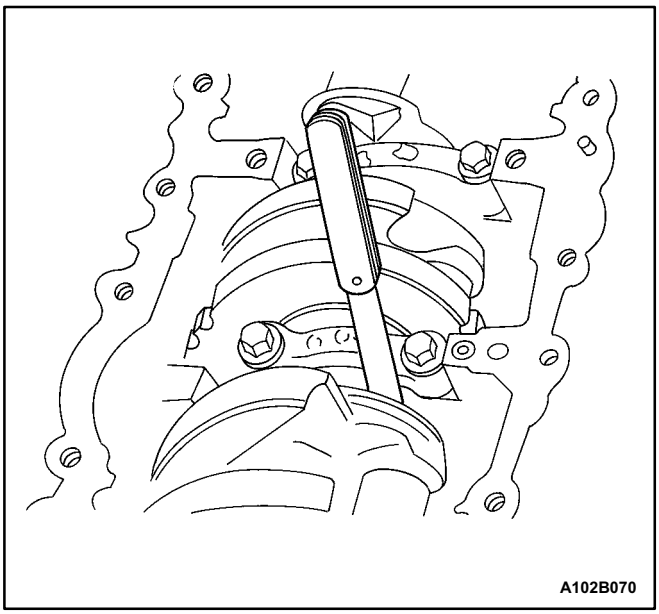

3. Install the crankshaft.
4. Install the lower crankshaft bearings in the bearing caps.
5. Inspect the crankshaft end play with the crankshaft bearings installed.
6. Check for permissible crankshaft end play. Refer to "Engine Specifications" in this section.

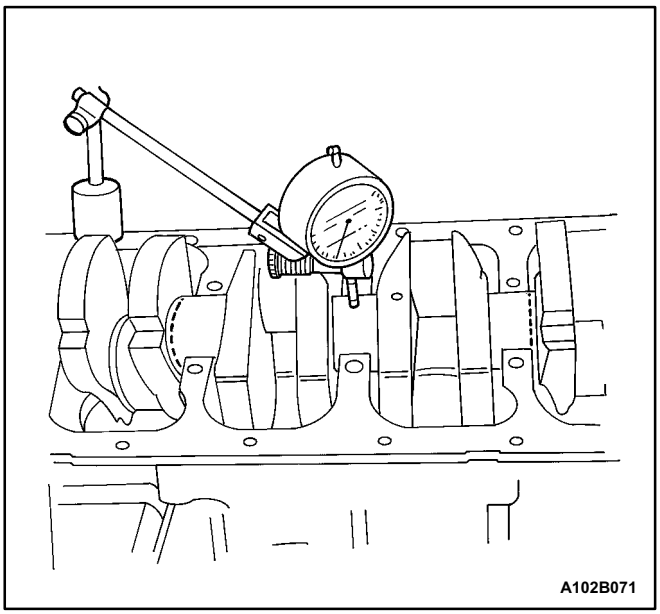

7. With the crankshaft mounted on the front and the rear crankshaft bearings, check the middle crankshaft journal for permissible out-of-round (runout). Refer to ``Engine Specifications'' in this section.

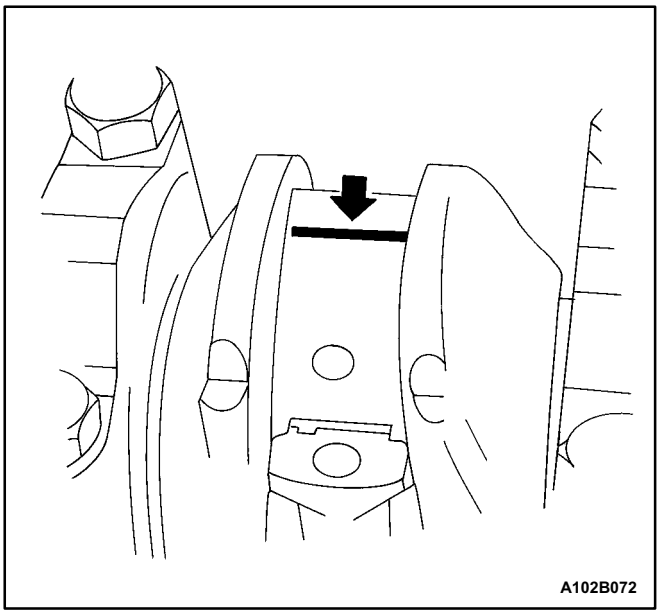

Important: Grease the crankshaft journals and lubricate the crankshaft bearings slightly so that the plastic gauging thread does not tear when the crankshaft bearing caps are removed.

8. Inspect all of the crankshaft bearing clearances using a commercially available plastic gauging (ductile plastic threads).
9. Cut the plastic gauging threads to the length of the bearing width. Lay them axially between the crankshaft journals and the crankshaft bearings.
10. Install the crankshaft bearing caps and the bolts.

Tighten

Tighten the crankshaft bearing cap bolts to 35 N•m (26 lb•ft) using a torque wrench. Use the angular torque gauge KM-470-B to tighten the crankshaft bearing cap bolts another 45 degrees.

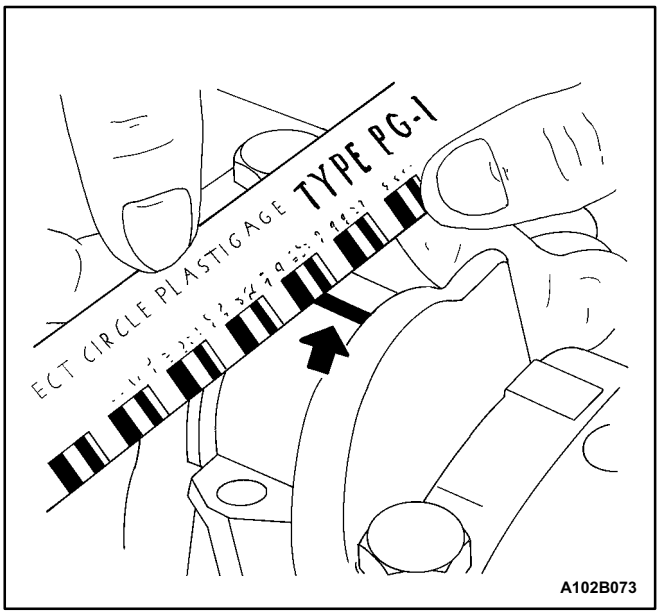

11. Remove the crankshaft bearing cap bolts and the caps.
12. Measure the width of the flattened plastic thread of the plastic gauging using a ruler. (Plastic gauging is available for different tolerance ranges.)
13. Inspect the bearing clearance for permissible tolerance ranges. Refer to Engine Specifications" in this section.

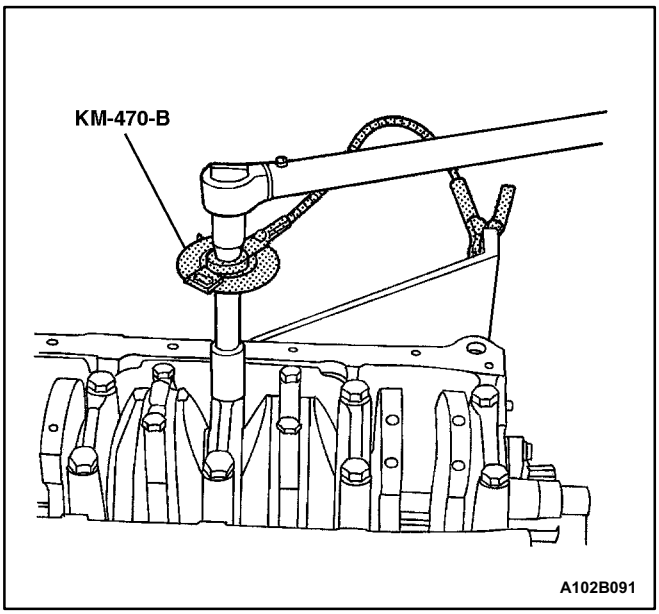

14. Apply a bead of adhesive sealing compound to the grooves of the crankshaft bearing caps.
15. Install the crankshaft bearing caps to the engine block.
16. Tighten the crankshaft bearing caps using new bolts.

Tighten

Tighten the crankshaft bearing cap bolts to 35 N•m (26 lb•ft) using a torque wrench. Use the angular torque gauge KM-470-B to tighten the crankshaft bearing cap bolts another 45 degrees.

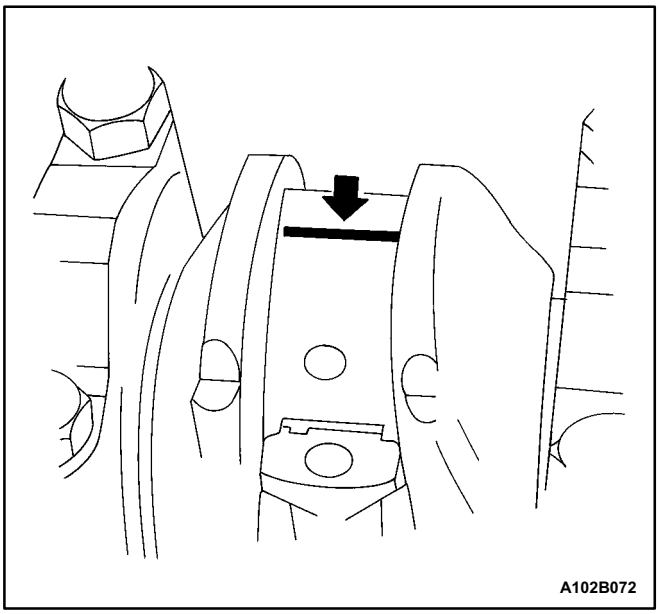

Important: Grease the connecting rod journals and lubricate the connecting rod bearings slightly so that the plastic gauging thread does not tear when the connecting rod bearing caps are removed.

17. Inspect all of the connecting rod bearing clearances using a commercially available plastic gauging (ductile plastic threads).
18. Cut the plastic gauging threads to the length of the connecting rod bearing width. Lay them axially between the connecting rod journals and the connecting rod bearings.
19. Install the connecting rod bearing caps with the bolts.

Tighten

Tighten the connecting rod bearing cap bolts to 35 N•m (26 lb•ft) using a torque wrench. Use the angular torque gauge KM-470-B to tighten the connecting rod bearing cap bolts another 45 degrees plus 15 degrees.

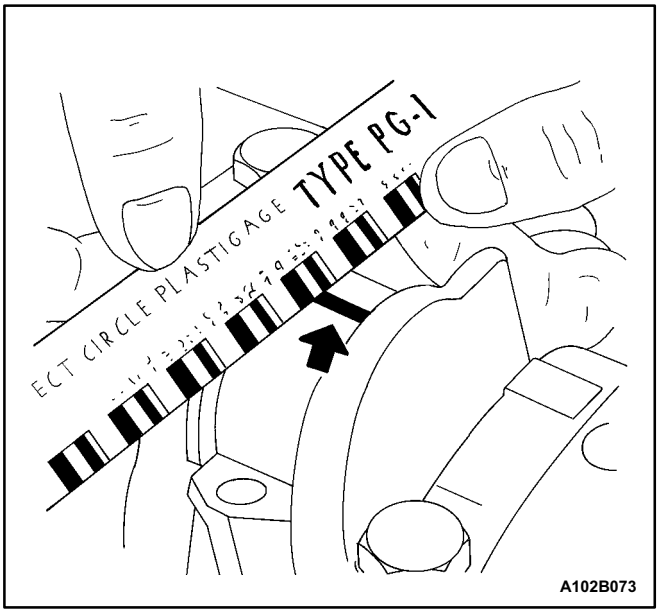

20. Remove the connecting rod bearing caps.
21. Measure the width of the flattened plastic thread of the plastic gauging using a ruler. (Plastic gauging is available for different tolerance ranges.)
22. Inspect the bearing clearance for permissible tolerance ranges. Refer to "Engine Specifications" in this section.

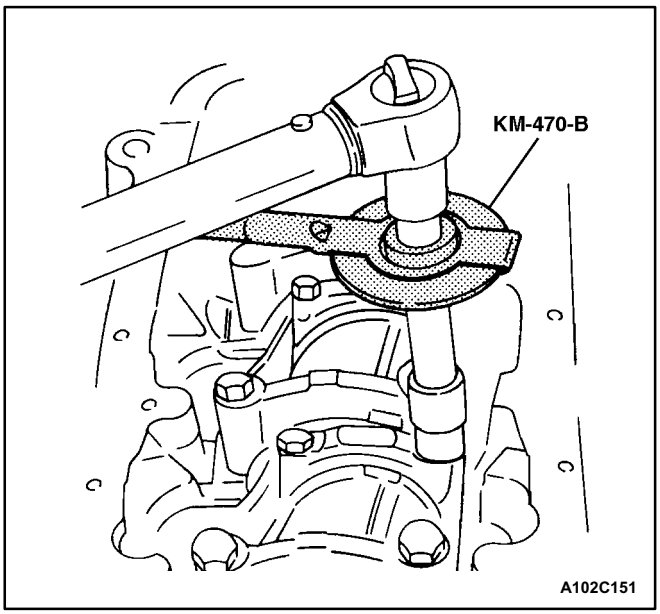

23. Install the connecting rod bearing caps to the connecting rods.
24. Tighten the connecting rod bearing caps using new bolts.

Tighten

Tighten the connecting rod bearing cap bolts to 35 N•m (26 lb•ft) using a torque wrench. Use the angular torque gauge KM-470-B to tighten the connecting rod bearing cap bolts another 45 degrees plus 15 degrees.

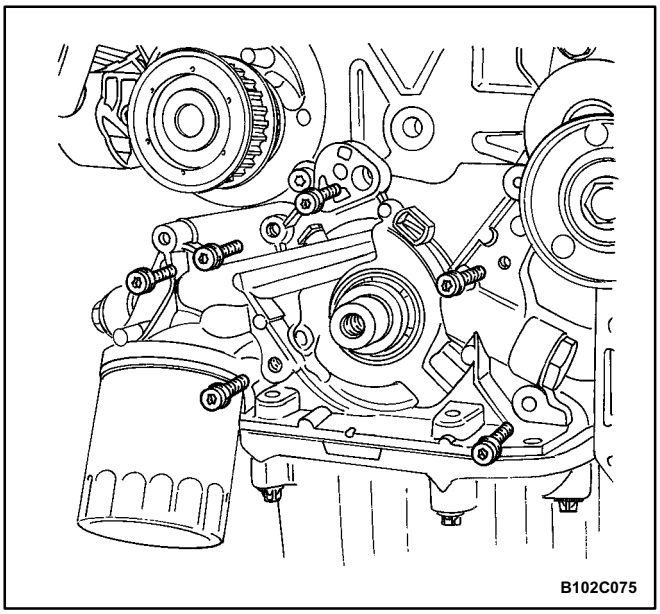

25. Install the oil pump
26. Install the oil pump retaining bolts.

Tighten

Tighten the oil pump retaining bolts to 10 N•m (89 lb•in).

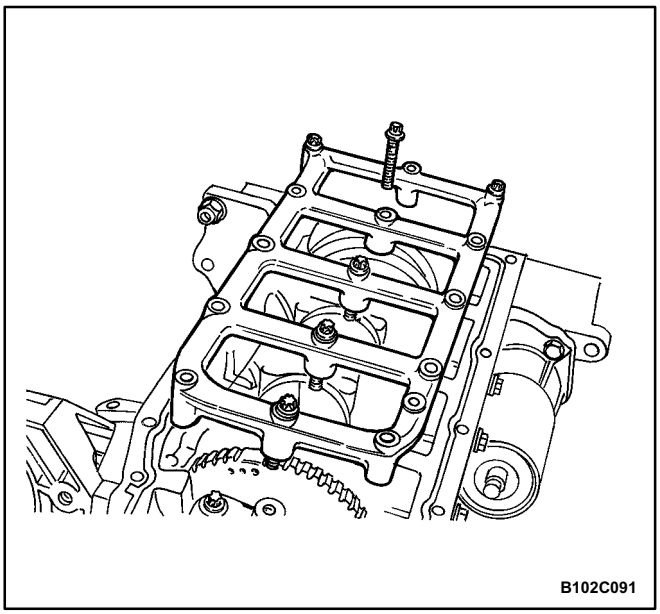

27. Install the engine block lower support bracket with the bolts.

Tighten

Tighten the engine block lower support bracket bolts to 40 N•m (30 lb•ft).

28. Install the engine block lower support bracket splash shield with the bolts.

Tighten

Tighten the engine block lower support bracket splash shield bolts to 40 N•m (30 lb•ft).

29. Install the oil pump/pickup tube with the bolts.

Tighten

Tighten the oil pump/pickup tube bolts to 8 N•m (71 lb•in).

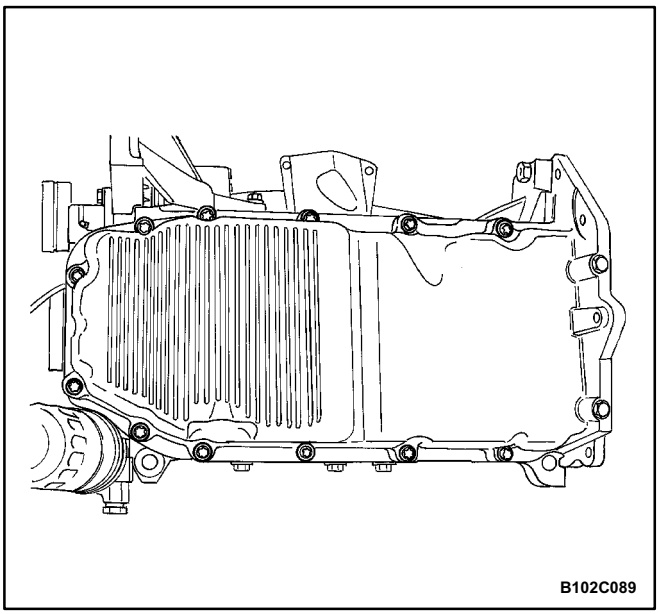

30. Coat the new oil pan gasket with sealant.
31. Install the oil pan gasket to the oil pan.
32. Install the oil pan.
33. Install the oil pan retaining bolts.

Tighten

Tighten the oil pan retaining bolts to 10 N•m (89 lb•in).

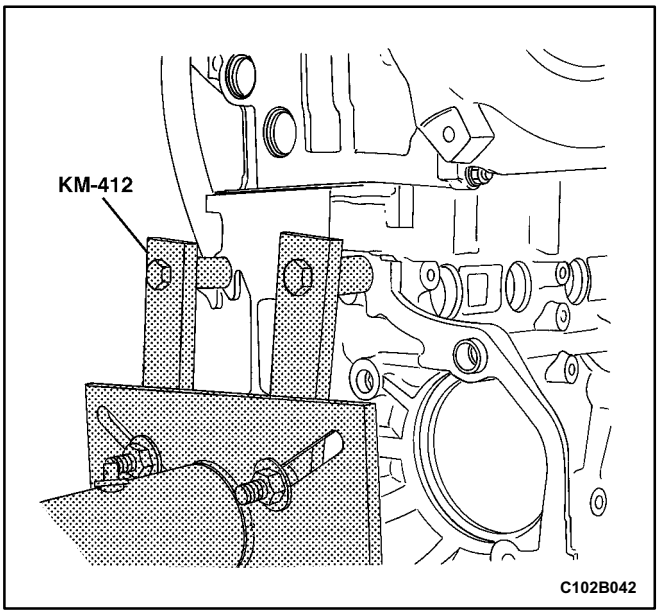

34. Rotate the engine on the engine overhaul stand KM-412.

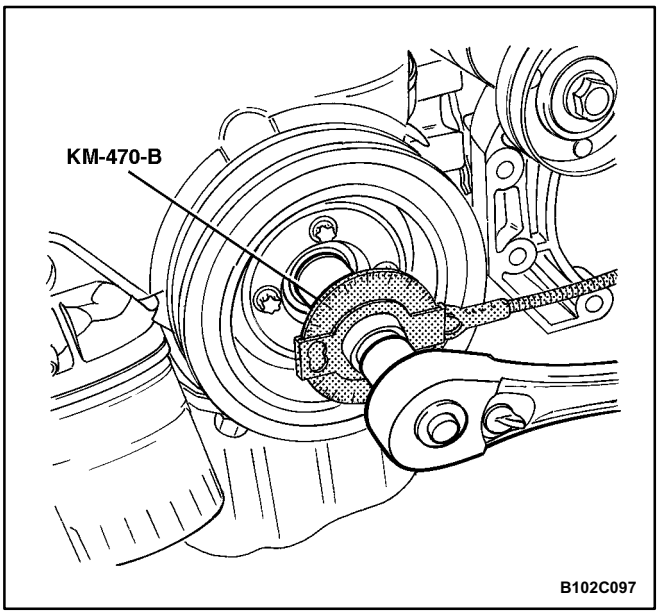

35. Install the rear timing belt cover with the bolts.

Tighten

Tighten the rear timing belt cover bolts to 6 N•m (53 lb•in).

36. Install the crankshaft timing belt drive bear with the bolt.

Tighten

Tighten the crankshaft timing belt drive gear bolt to 95 N•m (70 lb•ft). Then use the angular torque gauge KM-470-B to tighten the crankshaft timing belt drive gear bolt another 30 degrees plus 15 degrees.

37. Install the right side engine mount with the retaining bolts/nuts.

Tighten

Tighten the right side engine mount retaining bolts/nuts to 60 N•m (44 lb•ft).

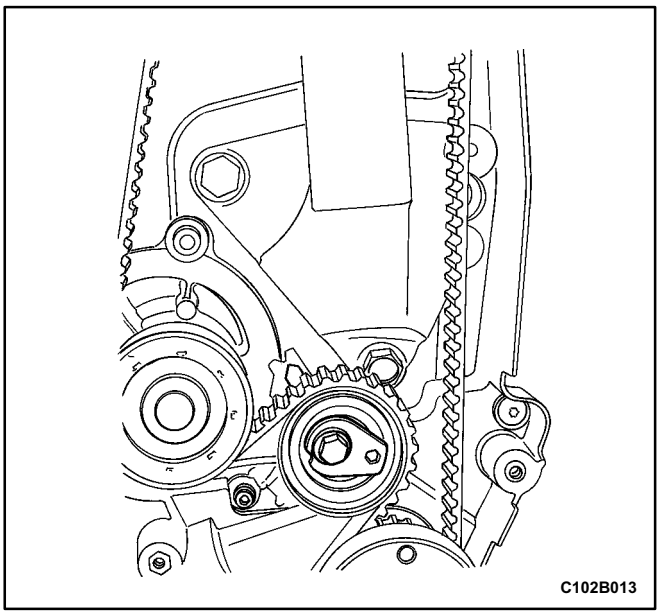

38. Install the timing belt automatic tensioner with the bolt.

Tighten

Tighten the timing belt automatic tensioner bolt to 25 N•m (18 lb•ft).

Important: Route the knock sensor wire into its track prior to proceeding.

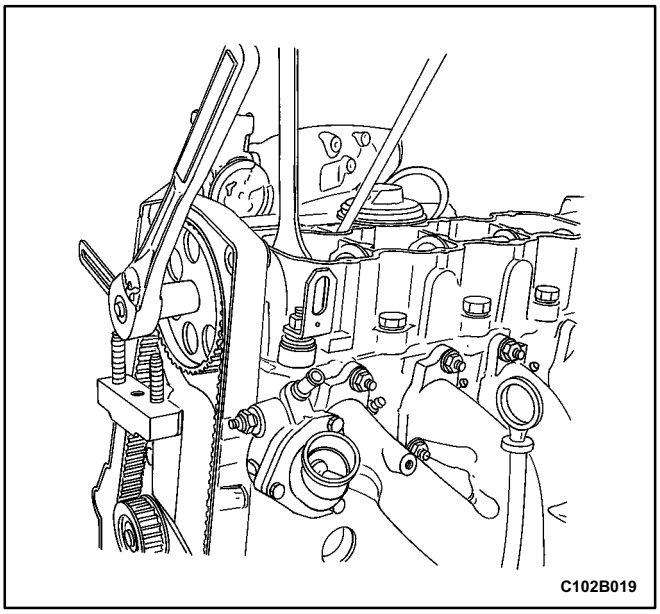

Notice: Take extreme care to prevent any scratches, nicks, or damage to the camshaft. Such damage can cause premature engine wear.

39. Install the camshaft gear.
40. Install the camshaft gear retaining bolt while holding the camshaft firmly in place.

Tighten

Tighten the camshaft gear retaining bolt to 45 N•m (33 lb•ft).

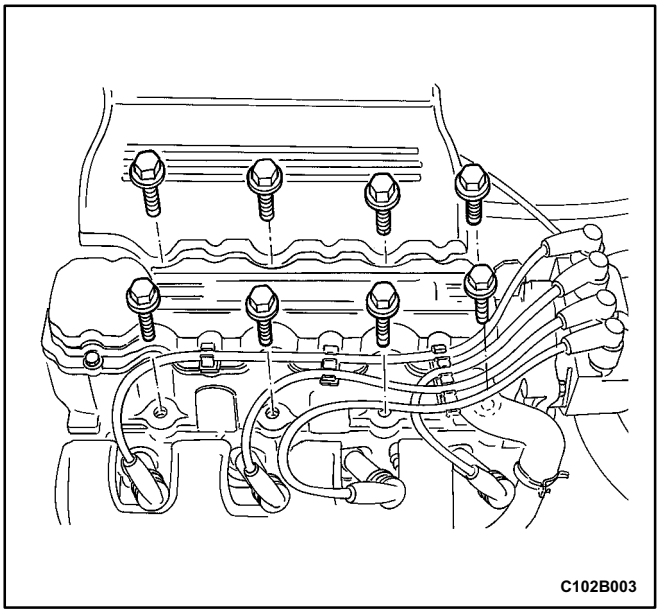

41. Install the timing belt. Refer to Timing Belt" in this section.
42. Adjust the timing belt tension. Refer to Timing Belt Check and Adjust" in this section.
43. Install the valve cover gasket and the valve cover.
44. Install the valve cover bolts.

Tighten

Tighten the valve cover bolts to 8 N•m (71 lb•in).

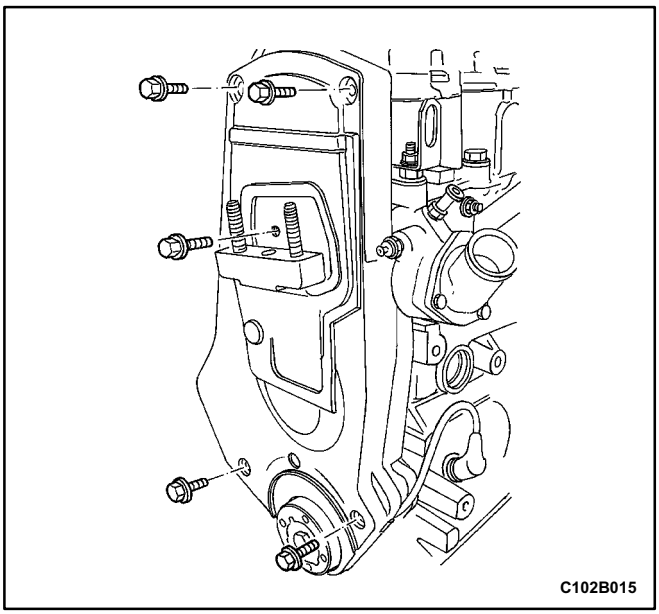

45. Connect the ignition wires to the spark plugs.
46. Connect the crankcase breather tube to the valve cover.
47. Install the front timing belt cover with the bolts.

Tighten

Tighten the front timing belt cover bolts to 6 N•m (53 lb•in).

48. Install the engine lifting device.
49. Remove the engine from the engine overhaul stand KM-412.

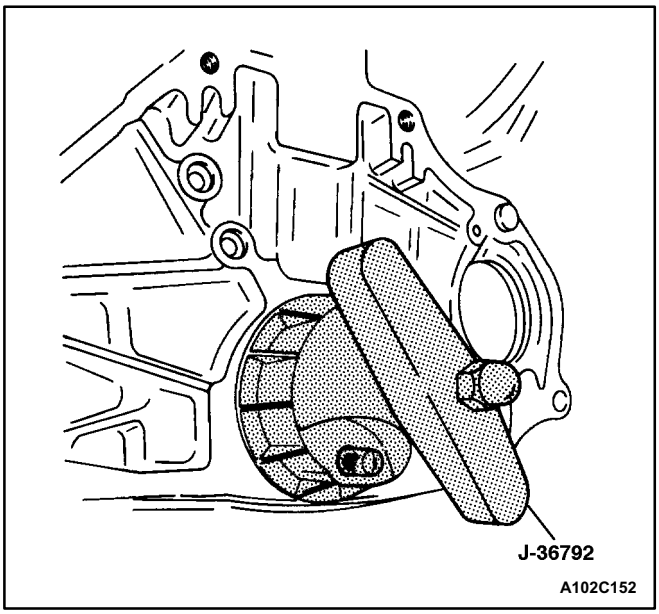

50. Install a new crankshaft rear oil seal using installer J-36792 or KM-635.

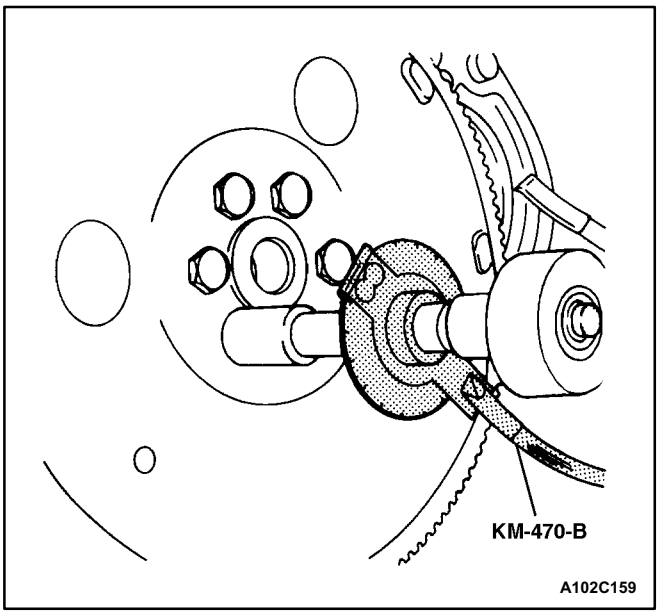

51. Install the flywheel or the flexible plate with the bolts.

Tighten

Tighten the flywheel bolts to 65 N•m (48 lb•ft). Use the angular torque gauge KM-470-B to tighten the flywheel bolts another 30 degrees plus 15 degrees. For the automatic transmission, tighten the flexible plate bolts to 65 N•m (48 lb•ft).

52. Install the engine. Refer to "Engine" in this section.

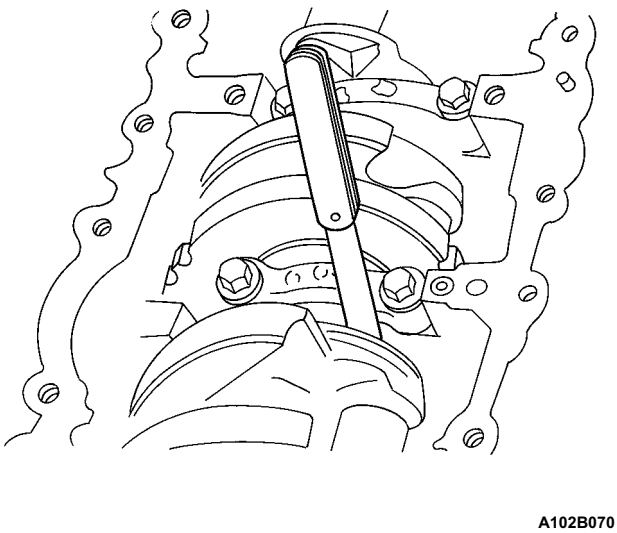

CRANKSHAFT BEARINGS AND CONNECTING ROD BEARINGS-GAUGING PLASTIC

Tools Required

KM-470-B Angular Torque Gauge

Inspection Procedure - Crankshaft

1. Coat the crankshaft bearings with engine oil.
2. Install the upper crankshaft bearings into the engine block crankshaft journals.
3. Install the lower crankshaft bearings into the crankshaft bearing caps.
4. Install the crankshaft.
5. Inspect the crankshaft end play with the crankshaft bearings installed.
6. Check for permissible crankshaft end play. Refer to "Engine Specifications" in this section.

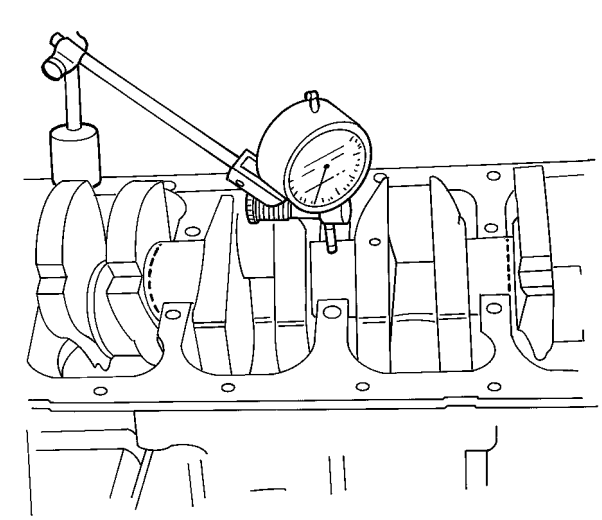

7. With the crankshaft mounted on the front and the rear crankshaft bearings, check the middle crankshaft journal for permissible out-of-round (runout). Refer to "Engine Specifications" in this section.

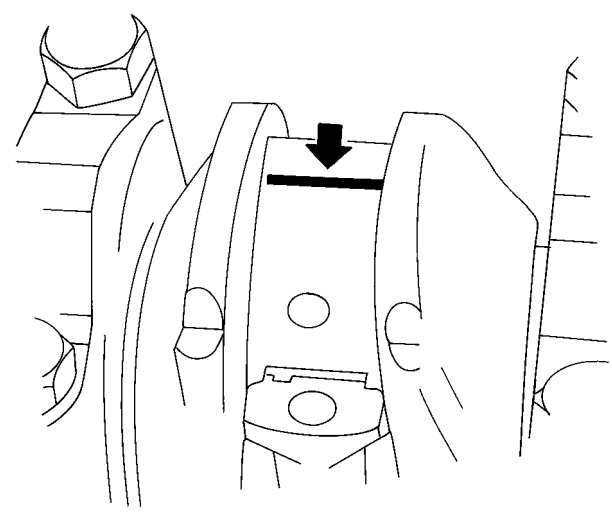

Important: Grease the crankshaft journals and lubricate the crankshaft bearings slightly so that the plastic gauging thread does not tear when the crankshaft bearing caps are removed.

8. Inspect all of the crankshaft bearing clearances using a commercially available plastic gauging (ductile plastic threads).
9. Cut the plastic gauging threads to the length of the bearing width. Lay them axially between the crankshaft journals and the crankshaft bearings.

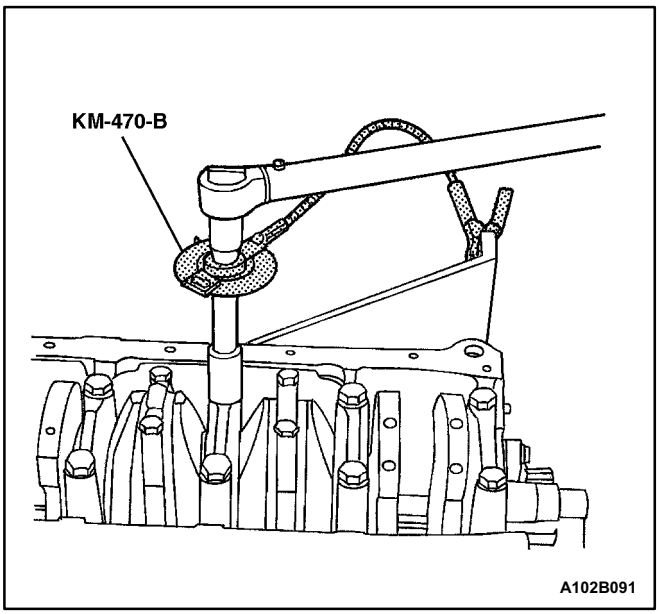

10. Install the crankshaft bearing caps with the bolts.

Tighten

Tighten the crankshaft bearing cap bolts to 35 N•m (26 lb•ft). Using the angular torque gauge KM-470-B, tighten the crankshaft bearing cap bolts another 45 degrees.

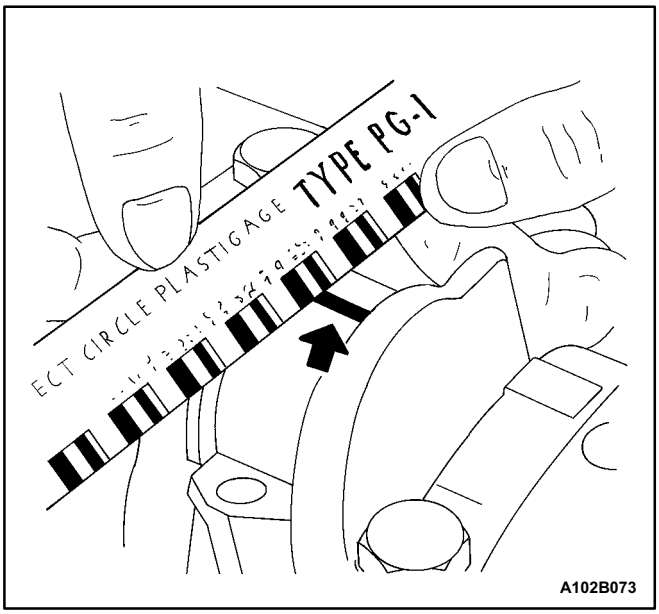

11. Remove the crankshaft bearing caps.
12. Measure the width of the flattened plastic thread of the plastic gauging using a ruler. (Plastic gauging is available for different tolerance ranges.)
13. Inspect the bearing clearances for permissible tolerance ranges. Refer to "Engine Specifications" in this section.

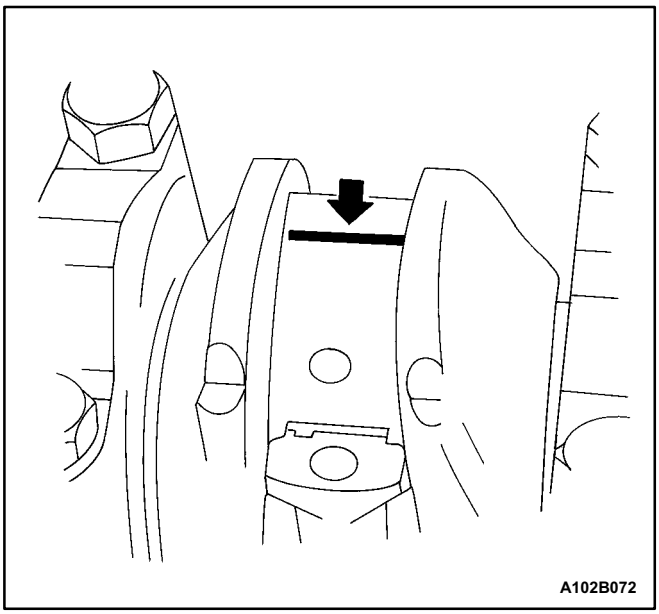

Inspection Procedure - Connecting Rods

1. Coat the connecting rod bearings with engine oil.
2. Install the upper connecting rod bearings into the connecting rod journals.
3. Install the lower connecting rod bearings into the connecting rod bearing caps.

Important: Grease the connecting rod journals and lubricate the connecting rod bearings slightly so that the plastic gauging thread does not tear when the connecting rod bearing caps are removed.

4. Inspect all of the connecting rod bearing clearances using a commercially available plastic gauging (ductile plastic threads).
5. Cut the plastic gauging threads to the length of the bearing width. Lay them axially between the connecting rod journals and the connecting rod bearings.

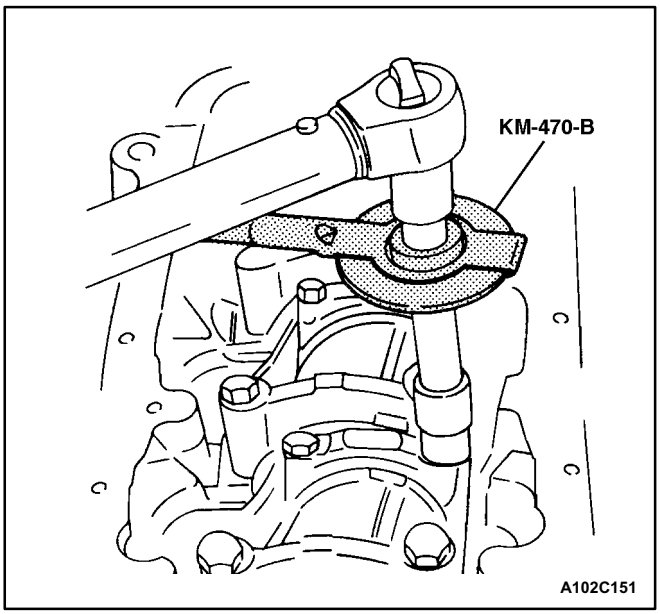

6. Install the connecting rod bearing caps with the bolts.

Tighten

Tighten the connecting rod cap bolts to 35 N•m (26 lb•ft). Using the angular torque gauge KM-470-B, tighten the connecting rod cap bolts another 45 degrees plus 15 degrees.

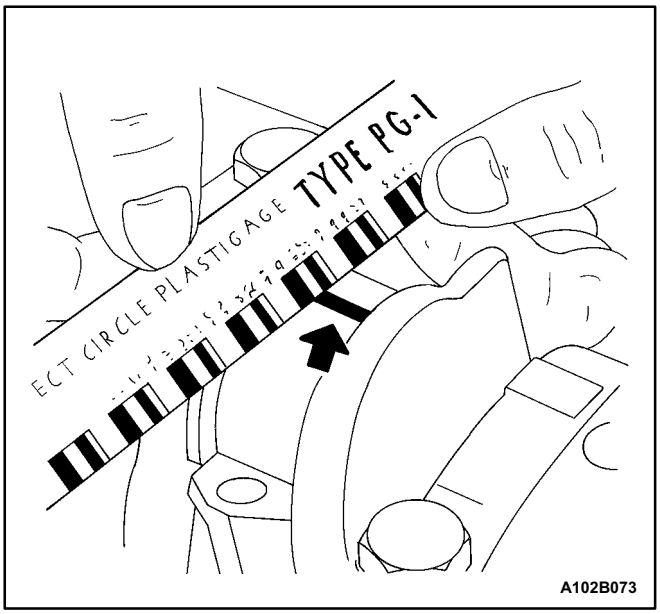

7. Remove the connecting rod bearing caps.
8. Measure the width of the flattened plastic thread of the plastic gauging using a ruler. (Plastic gauging is available for different tolerance ranges.)
9. Inspect the bearing clearance for permissible tolerance ranges. Refer to "Engine Specifications" in this section.

GENERAL DESCRIPTION AND SYSTEM OPERATION

CYLINDER HEAD AND GASKET

The cylinder head is made of an aluminum alloy. The cylinder head uses crossflow intake and exhaust ports. A spark plug is located in the center of each combustion chamber.

CRANKSHAFT

The crankshaft has eight integral weights which are cast with it for balancing. Oil holes run through the center of the crankshaft to supply oil to the connecting rods, the bearings, the pistons, and the other components. The end thrust load is taken by the thrust washers installed at the center journal.

TIMING BELT

The timing belt coordinates the crankshaft and the single overhead camshaft and keeps it synchronized. The timing belt also turns the coolant pump. The timing belt and the pulleys are toothed so that there is no slippage between them. An automatic tensioner pulley maintains the timing belt's correct tension. The timing belt is made of a tough reinforced rubber similar to that used on the serpentine drive belt. The timing belt requires no lubrication.

OIL PUMP

The oil pump draws engine oil from the oil pan and feeds it under pressure to the various parts of the engine. An oil strainer is mounted before the inlet of the oil pump to remove impurities which could clog or damage the oil pump or the other engine components. When the crankshaft rotates, the oil pump driven gear rotates. This causes the space between the gears to constantly open and narrow, pulling oil in from the oil pan when the space opens and pumping the oil out to the engine as it narrows.

At high engine speeds, the oil pump supplies a much higher amount of oil than required for lubrication of the engine. The oil pressure regulator prevents too much oil from entering the engine lubrication passages. During normal oil supply, a coil spring and valve keep the bypass closed, directing all of the oil pumped to the engine. When the amount of oil being pumped increases, the pressure becomes high enough to overcome the force of the spring. This opens the valve of the oil pressure regulator, allowing the excess oil to flow through the valve and drain back to the oil pan.

OIL PAN

The engine oil pan is mounted to the bottom of the cylinder block. The oil pan houses the crankcase and is made of cast aluminum.

Engine oil is pumped from the oil pan by the oil pump. After the oil passes through the oil filter, the oil is fed through two paths to lubricate the cylinder block and cylinder head. In one path, the oil is pumped through the oil passages in the crankshaft to the connecting rods, then to the pistons and the cylinders. It then drains back to the oil pan. In the second path, the oil is pumped through passages to the camshaft. The oil passes through the internal passageways in the camshafts to lubricate the valve assemblies before draining back to the oil pan.

EXHAUST MANIFOLD

A single four port, rear takedown manifold is used with this engine. The manifold is designed to direct escaping exhaust gases out of the combustion chambers with a minimum of backpressure. The oxygen sensor is mounted to the exhaust manifold.

INTAKE MANIFOLD

The intake manifold has four independent long ports and utilizes an inertial supercharging effect to improve engine torque at low and moderate speeds.

CAMSHAFT

This engine is a single overhead camshaft (SOHC). The camshaft sits in a carrier on the top of the engine and operates the intake and the exhaust valves. Engine oil travels to the camshaft under pressure, where it lubricates the camshaft bearings. The oil returns to the oil pan through drain holes in the cylinder head. The camshaft lobes are machined into the solid camshaft to precisely open and close the intake and the exhaust valves the correct amount at the correct time. The camshaft lobes are oiled by splash action from pressurized oil escaping from the camshaft bearings.

SECTION 1C

2.0L DOHC ENGINE MECHANICAL

CAUTION: Disconnect the negative battery cable before removing or installing any electrical unit or when a tool or equipment could easily come in contact with exposed electrical terminals. Disconnecting this cable will help prevent personal injury and damage to the vehicle. The ignition must also be in LOCK unless otherwise noted.

TABLE OF CONTENTS

Specifications 1C-2
Engine Specifications 1C-2
Fastener Tightening Specifications (2.0L DOHC) 1C-5
Fastener Tightening Specifications (2.2L DOHC) 1C-7
Special Tools 1C-9
Special Tools Table 1C-9
Component Locator 1C-11
Upper End 1C-11
Lower End 1C-13
Maintenance and Repair 1C-15
On-Vehicle Service 1C-15
Valve Cover 1C-15
Cylinder Head and Gasket 1C-17
Camshafts 1C-29
Timing Belt Check and Adjust 1C-32
Timing Belt 1C-36
Oil Pan 1C-41
Oil Pump 1C-45
Engine Mount, Right Side 1C-49
Engine Mount, Forward 1C-51
Intake Manifold 1C-53
Exhaust Manifold 1C-57
Camshaft Gears 1C-59
Rear Timing Belt Cover 1C-61
Engine 1C-63
Pistons and Connecting Rods 1C-72
Unit Repair 1C-78
Cylinder Head and Valve Train Components 1C-78
Crankshaft 1C-87
Crankshaft Bearings and Connecting Rod Bearings - Gauging Plastic 1C-98
General Description and System Operation 1C-101
Cylinder Head and Gasket 1C-101
Crankshaft 1C-101
Timing Belt 1C-101
Oil Pump 1C-101
Oil Pan 1C-101
Exhaust Manifold 1C-101
Intake Manifold 1C-101
Camshafts 1C-101
EGR Valve 1C-101

SPECIFICATIONS

ENGINE SPECIFICATIONS

Application	2.0L DOHC	2.2L DOHC
General Data:		
Engine Type	4 Cylinder (In-Line)	←
Displacement	1,998 cm^3 (121 in^3)	2,198 cm^3 (134.1 in^3)
Bore Stroke	86 x 86 mm (3.38in x 3.38 in.)	86 x 94.6mm (3.38in x 3.72in.)
Compression Ratio	9.6:1	←
Firing Order	1-3-4-2	←
Cylinder Bore:		
Diameter	85.975 ~ 86.025 mm (3.384 ~ 3.386 in.)	←
Out of Round (Maximum)	0.013 mm (0.0005 in.)	←
Cylinder Bore Taper (Maximum)	0.013 mm (0.0005 in.)	←
Piston Protusion	0.5 mm Max (0.019 in.)	←
Oversize (Measure Replacement Piston before Re-boring)	Available in 0.50 mm to suit bore (0.019 in.)	←
Service Replacement Standard Bore	4 Piston, Pin, and Ring Assemblies Available	←
Block Face Distortion	0.05 mm Max (0.00197 in.)	←
Piston:		
Diameter	85.955 ~ 86.485 mm (3.384 ~ 3.404 in.)	←
Clearance to Bore	0.030 ~ 0.050 mm (0.00118 ~ 0.0020 in.)	←
Piston Protrusion	0.5 mm Max (0.019 in.)	←
Piston Taper	0.013 mm (0.0005 in.)	←
Piston Rings:		
Ring, End Gap, Top Compression	0.3 ~ 0.5 mm (0.011 ~ 0.019 in.)	←
Ring, End Gap, Second Compression	0.3 ~ 0.5 mm (0.011 ~ 0.019 in.)	←
Oil	0.4 ~ 1.4 mm (0.0015 ~ 0.055 in.)	←
Piston Pin:		
Diameter	20.9970 ~ 20.9985 mm (0.82665 ~ 0.82671 in.)	←
Pin Offset	0.8 mm (0.03 in.) Toward Thrust Side	←

ENGINE SPECIFICATIONS (Cont'd)

Application	2.0L DOHC	2.2L DOHC
Clearance: In Piston	0.0035 ~ 0.0140 mm (0.00013 ~ 0.00055 in.)	←
Clearance: In Rod	Interference Fit in Rod	←
Length	61.5 mm (2.42 in.)	←
Camshaft:		
Lift - Intake	10.0 mm (0.39 in.)	←
Lift - Exhaust	10.0 mm (0.39 in.)	←
Camshaft Cap to Bearing Journal Clearance	0.04 ~ 0.144 mm (0.0015 ~ 0.0056 in.)	←
Bearing Journal OD	42.455 ~ 43.470 mm (1.6714 ~ 1.7114 in.)	←
Crankshaft:		
Main Journal	-	-
Diameter (All)	57.974 ~ 57.995 mm (2.2824 ~ 2.2832 in.)	←
Radial Runout (Shaft Support on No. 1 and No. 5 Bearings Measured at No. 3 Journal)	0.03 ~ 0.061 mm (0.00118 ~ 0.00240 in.)	←
Main Bearing Clearance (All)	0.015 ~ 0.061 mm (0.00059 ~ 0.00240 in.)	←
End Play	0.070 ~ 0.302 mm (0.0027 ~ 0.0118 in.)	←
Service Oversize, Available in 2 sizes	0.25 and 0.5 mm (0.00098 and 0.019 in.)	←
Connecting Rod Journal:		
Diameter (All)	48.981 ~ 48.987 mm (1.9283 ~ 1.9286 in.)	←
Out of Round (Maximum)	0.004 mm (0.00015 in.)	←
Rod Bearing Play	0.006 ~ 0.031 mm (0.00023 ~ 0.00122 in.)	←
Rod Bearing Clearance	0.019 ~ 0.063 mm (0.0007 ~ 0.0024 in.) (Production 0.013 ~ 0.041 mm 0.0005 ~ 0.0016 in.)	←
Cylinder Head:		
Valve Stem Protrusion	39.8 mm Max (1.566 in.)	←
Valve Guide Height	13.7 ~ 14.0 mm (0.53 ~ 0.55 in.)	←
Overall Height	134.0 ± 0.025 mm (5.275 ~ 0.0009 in.)	←
Minimum Overall Height After Machining	133.9 mm (5.271 in.)	←

ENGINE SPECIFICATIONS (Cont'd)

Application	2.0L DOHC	2.2L DOHC
Valve System:		
Valve Lash Compensators	Hydraulic	←
Seat Runout (Maximum, All)	0.03 mm (0.001 in.)	←
Face Runout (Maximum, All)	0.03 mm (0.001 in.)	←
Valve Stem Diameter Intake	5.970 ~ 5.955 mm (0.235 ~ 0.234 in.)	←
Exhaust	5.960 ~ 5.945 mm (0.23464 ~ 0.2360 in.)	←
Valve Diameter Intake	32 ± 0.1 mm (1.2598 ± 0.0039 in.)	←
Exhaust	29 ± 0.1 mm (1.1417 ± 0.0039 in.)	←
Valve Seat Width Intake	1.0 ~ 1.5 mm (0.039 ~ 0.059 in.)	←
Exhaust	1.7 ~ 2.2 mm (0.066 ~ 0.086 in.)	←
Valve Face Angle	44°	←
Valve Seat Angle	40°	←
Valve Guide Inside Diameter	6.000 ~ 6.012 mm (0.236 ~ 0.237 in.)	←
Oil Pump:		
Gear Lash	0.10 ~ 0.20 mm (0.0040 ~ 0.008 in.)	←
Outer Gear to Body	0.11 ~ 0.19 mm (0.0043 ~ 0.0074 in.)	←
Outer Gear to Crescent	0.11 ~ 0.24 mm (0.0043 ~ 0.009 in.)	←
Inner Gear to Crescent	0.18 ~ 0.26 mm (0.007 ~ 0.010 in.)	←
End Clearance	0.03 ~ 0.10 mm (0.001 ~ 0.004 in.)	←
Sealants and Adhesives:		
Rear Main Bearing Cap	GE p/n RTV 159	←
Camshaft Carrier to Cylinder head	HN 1581 (Loctite® 515)	←
Oil Pan Bolts	HN 1256 (Loctite® 542)	←
Oil Pump Bolts	HN 1256 (Loctite® 542)	←
Oil Pan Pickup Tube Bolts	HN 1256 (Loctite® 542)	←
Oil Gallery Plug	HN 1256 (Loctite® 542)	←
Coolant Jacket Caps and Plugs (Freeze Plugs)	HN 1756 (Loctite® 176)	←
Exhaust Manifold Studs/Nuts	Anti-seize Compound (HMC Spec HN1325)	←

2.0L DOHC FASTENER TIGHTENING SPECIFICATIONS

Application	N•m	Lb•Ft	Lb•In
A/C Compressor Hose Assembly Bolt	33	24	-
Air Filter Housing Bolts	8	-	71
Alternator to Intake Manifold Strap Bracket Bolt	20	15	-
Alternator-to-Intake Manifold Support Bracket Bolts	35	26	-
Automatic Tensioner Bolt	25	18	-
Camshaft Bearing Cap Bolts	8	-	71
Canister Purge Solenoid Bracket Bolt	5	-	44
Connecting Rod Cap Bearing Bolts	35 + 45° + 15°	26 + 45° + 15°	-
Coolant Bypass Housing Bolts	15	11	-
Coolant Pump Retaining Bolts	20	15	-
Coolant Temperature Sensor	25	18	-
Crankshaft Bearing Cap Bolts	50 +45° +15°	37 + 45°	-
Crankshaft Position Sensor Retaining Bolt	13	-	115
Crankshaft Pulley Bolts	20	15	-
Crankshaft Timing Belt Drive Gear Bolt	130 +40° +50°	96 + 40° + 50°	-
Cylinder Head Bolts	25 + 90°+ 90°+ 90°	18 + 90°+ 90°+ 90°	-
DIS Ignition Coil and EGR Mounting Bracket Bolts	25	18	-
Engine Block Lower Support Bracket/Splash Shield Bolts	35	26	-
Engine Mount Bolts	60	44	-
Engine Mount Bracket-to-Engine Mount Retaining Bolts	60	44	-
Engine Mount Bracket Retaining Bolts and Nut	60	44	-
Engine Mount Bracket-to-Engine Block Bolts	90	66	-
Engine Mount Bracket-to-Engine Block Nuts	90	66	-
Engine Mount Retaining Bolts	60	44	-
Engine to Intake Manifold Support Bracket	20	15	-
Exhaust Camshaft Gear Bolt	50 +60°+15°	37 +60°+15°	-
Exhaust Flex Pipe-to-Catalytic Converter Retaining Nuts	30	22	-
Exhaust Flex Pipe-to-Exhaust Manifold Retaining Nuts	22	16	-
Exhaust Flex Pipe Support Bracket Bolts	30	22	-
Exhaust Gas Recirculation Valve Bolts	20	15	-
Exhaust Manifold Heat Shield Bolts	15	11	-
Exhaust Manifold Retaining Nuts	15	11	-
Exhaust Support Bracket Bolts	30	22	
Flexible Plate Bolts	65	48	-

2.0L DOHC FASTENER TIGHTENING SPECIFICATIONS (Cont'd)

Application	N•m	Lb•Ft	Lb•In
Flywheel Bolts	65 + 30° + 15°	48 + 30° + 15°	-
Front Timing Belt Cover Bolts	6	-	53
Fuel Rail Retaining Bolts	25	18	-
Ignition Coil Mounting Bolts	10	-	89
Intake Camshaft Gear Bolt	50 +60°+15°	37 +60°+15°	-
Intake Manifold Retaining Nuts and Bolts	18	13	-
Intake Manifold Support Bracket Lower Bolts	20	15	-
Intake Manifold Support Bracket Upper Bolts	20	15	-
Oil Pan Drain Plug	35	26	-
Oil Pan Flange-to-Transaxle Bolts	40	30	-
Oil Pan Retaining Bolts	10	-	89
Oil Pump Retaining Bolts	10	-	89
Oil Pump Pickup Tube Bolts	8	-	71
Oil Pump Pickup Tube Support Bracket Bolt	10	-	89
Oil Pump Rear Cover Bolts	6	-	53
Power Steering Hose Clamp Bolt	8	-	71
Rear Timing Belt Cover Bolts	6	-	53
Resonator Retaining Bolts	8	-	71
Spark Plug Cover Bolts	3	-	27
Spark Plugs	20	15	-
Thermostat Housing Mounting Bolts	15	11	-
Throttle Cable Bracket Bolts	8	-	71
Timing Belt Automatic Tensioner Bolt	25	18	-
Timing Belt Idler Pulley Nuts	25	18	-
Transaxle Bell Housing Bolts	75	55	-
Transaxle Torque Converter Bolts	60	44	-
Valve Cover Bolts	8	-	71

2.2L DOHC FASTENER TIGHTENING SPECIFICATIONS

Application	N•m	Lb•Ft	Lb•In
Air Filter Housing Bolts	8	-	71
Auxiliary Catalytic Converter-to-Connecting Pipe Nuts	40	30	-
Auxiliary Catalytic Converter-to-Exhaust Manifold Nuts	40	30	-
Camshaft Bearing Cap Bolts	8	-	71
Canister Purge Solenoid Bracket Bolt	5	-	44
Connecting Rod Cap Bearing Bolts	35 +45°+15°	26 +45°+15°	-
Coolant Bypass Housing Bolts	15	11	-
Connecting Pipe Mounting Bracket Nuts	30	22	-
Crankshaft Bearing Cap Bolts	50 +45°+15°	37 +45°+15°	-
Crankshaft Pulley Bolts	20	15	-
Crankshaft Timing Belt Drive Gear Bolt	130 + 40°～50°	96 + 40°～50°	-
Cylinder Head Bolts	25 + 90°+90°+ 90°	18 + 90°+90°+ 90°	-
Direct Ignition System and EGR Mounting Bracket Bolts	25	18	-
Engine Block Lower Support Bracket/Splash Shield Bolts	35	26	-
Engine Mount Bolts	60	44	-
Engine Mount Bracket-to-Engine Block Nuts/Bolts	90	66	-
Exhaust Camshaft Gear Bolt	50 +60°+15°	37 +60°+15°	-
Exhaust Manifold Heat Shield Bolts	15	11	-
Exhaust Manifold Retaining Nuts	15	11	-
Flexible Plate Bolts	65	48	-
Flywheel Bolts	65 +30°+15°	48 +30°+15°	-
Front Muffler Pipe-to-Main Catalytic Converter Nuts	30	22	-
Front Timing Belt Cover Bolts	6	-	53
Generator-to-Intake Manifold Strap Bracket Bolts	20	15	-
Generator-to-Intake Manifold Support Bracket Bolts	35	26	-
Intake Camshaft Gear Bolt	50 +60°+15°	37 +60°+15°	-
Intake Manifold Retaining Nuts and Bolts	18	13	-
Intake Manifold Support Bracket Lower Bolt	20	15	-
Intake Manifold Support Bracket Upper Bolts	20	15	-

2.2L DOHC FASTENER TIGHTENING SPECIFICATIONS (Cont'd)

Application	N•m	Lb•Ft	Lb•In
Oil Pan Drain Plug	35	26	-
Oil Pan Flange-to-Transaxle Retaining Bolts	40	30	-
Oil Pan Retaining Bolts	10	-	89
Oil Pressure Switch	40	30	-
Oil Pump Rear Cover Bolts	6	-	53
Oil Pump Retaining Bolts	10	-	89
Oil Pump Pickup Tube Bolts	8	-	71
Power Steering Hose Clamp Bolt	8	-	71
Pulse Pickup Sensor Disc	13	-	115
Rear Timing Belt Cover Bolts	6	-	53
Resonator Retaining Bolts	8	-	71
Safety Relief Valve Bolt	30	22	-
Spark Plug Cover Bolts	3	-	27
Spark Plugs	20	15	-
Thermostat Housing Mounting Bolts	15	11	-
Throttle Cable Bracket Bolts	8	-	71
Timing Belt Automatic Tensioner Bolt	25	18	-
Timing Belt Idler Pulley Nuts	25	18	-
Transaxle Bell Housing Bolts	75	55	-
Transaxle Torque Converter Bolts	60	44	-
Valve Cover Bolts	8	-	71

SPECIAL TOOLS

SPECIAL TOOLS TABLE

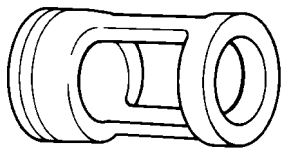 A102C153	**KM-653 Adapter**
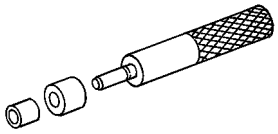 B102C045	**KM-535 Installer**
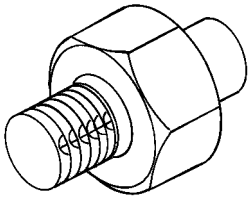 B102C044	**KM135 Adapter**
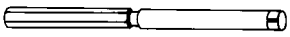 A102C154	**KM-805 Valve Guide Reamer**
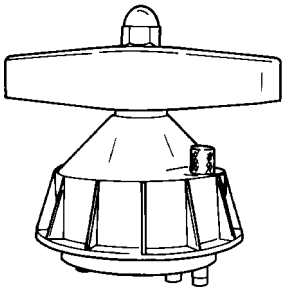 A102C155	**J-36972 Crankshaft Rear Oil Seal Installer**
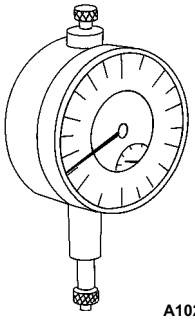 A102B154	**MKM-571-B Gauge**
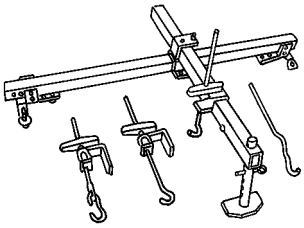 A102B152	**J-28467-B Engine Assembly Lift Support**
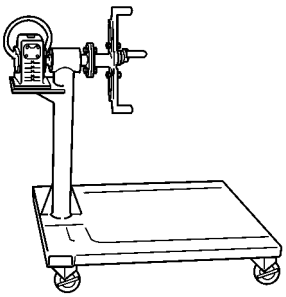 A102B159	**KM-412 Engine Overhaul Stand**

SPECIAL TOOLS TABLE (Cont'd)

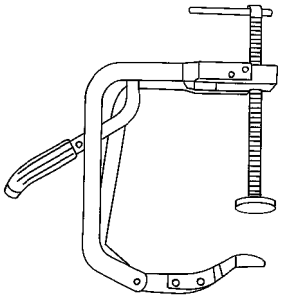 A102B157	**KM-348 Spring Compressor**	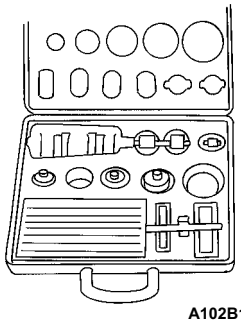 A102B156	**KM-340-0 Cutter Set**
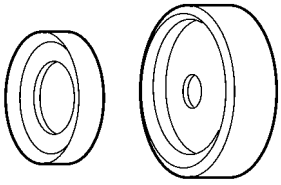 A102B160	**KM-635 Crankshaft Rear Oil Seal Installer**	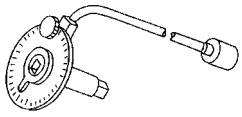 A102B161	**KM-470-B Angular Torque Gauge**
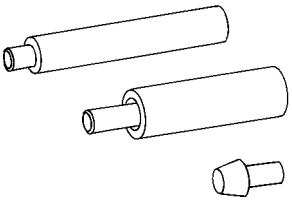 A102B153	**KM427 Piston Pin Service Set**	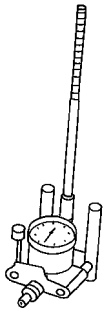 C102B005	**J-8087 Cylinder Bore Check Gauge**
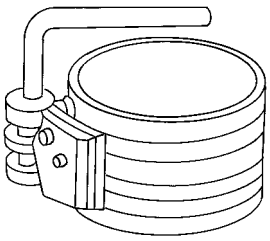 C102B004	**J-8037 Universal Piston Ring Compressor**	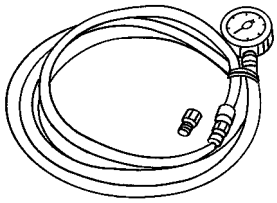 A202B005	**KM-498-B Pressure Gauge**

BLANK

COMPONENT LOCATOR

UPPER END

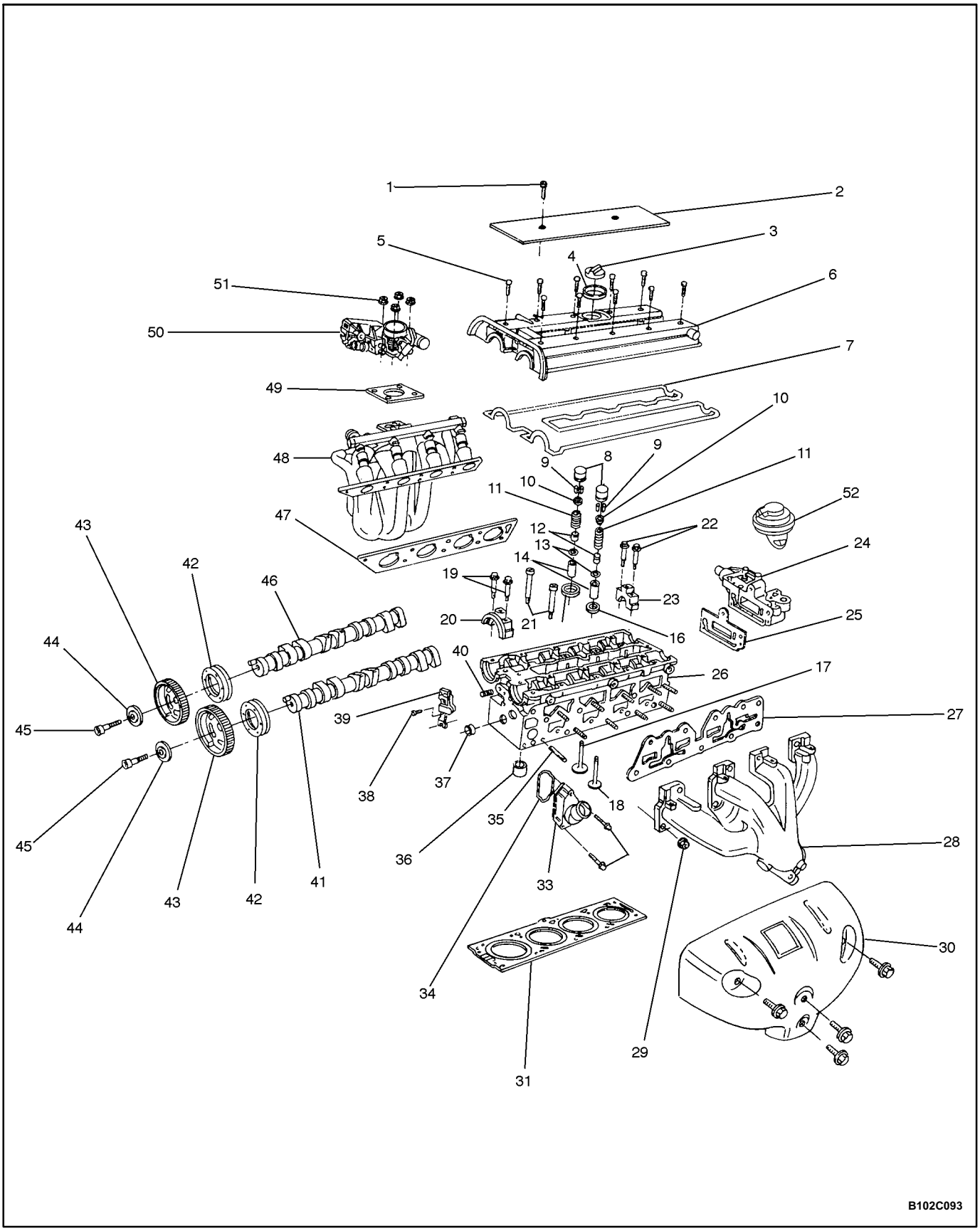

1 Bolt
2 Spark Plug Cover
3 Oil Cap
4 Oil Cap Seal
5 Bolt
6 Valve Cover
7 Valve Cover Gasket
8 Valve Lash Adjuster
9 Retainer
10 Valve Cap
11 Valve Spring
12 Valve Stem Seal
13 Valve Spring Seat
14 Valve Guide
15 Valve Spring Seat
16 Exhaust Seat
17 Inlet Valve
18 Exhaust Valve
19 Bolt
20 Front Bearing Cap
21 Head Bolt
22 Bolt
23 Bearing Cap
24 EGR Adapter
25 EGR Adapter Gasket
26 Cylinder Head
27 Exhaust Manifold Gasket
28 Exhaust Manifold
29 Nut
30 Exhaust Manifold Heat Shield
31 Cylinder Head Gasket
32 Bolt
33 Thermostat Housing
34 Thermostat Housing Gasket
35 Stud
36 Sleeve
37 Plug
38 Bolt
39 Camshaft Position Sensor
40 Oil Gallery Plug
41 Exhaust Camshaft
42 Seal Ring
43 Camshaft Gear
44 Washer
45 Camshaft Gear Bolt
46 Intake Camshaft
47 Intake Manifold Gasket
48 Intake Manifold
49 Throttle Body Gasket
50 Throttle Body
51 Nut
52 EGR Valve

LOWER END

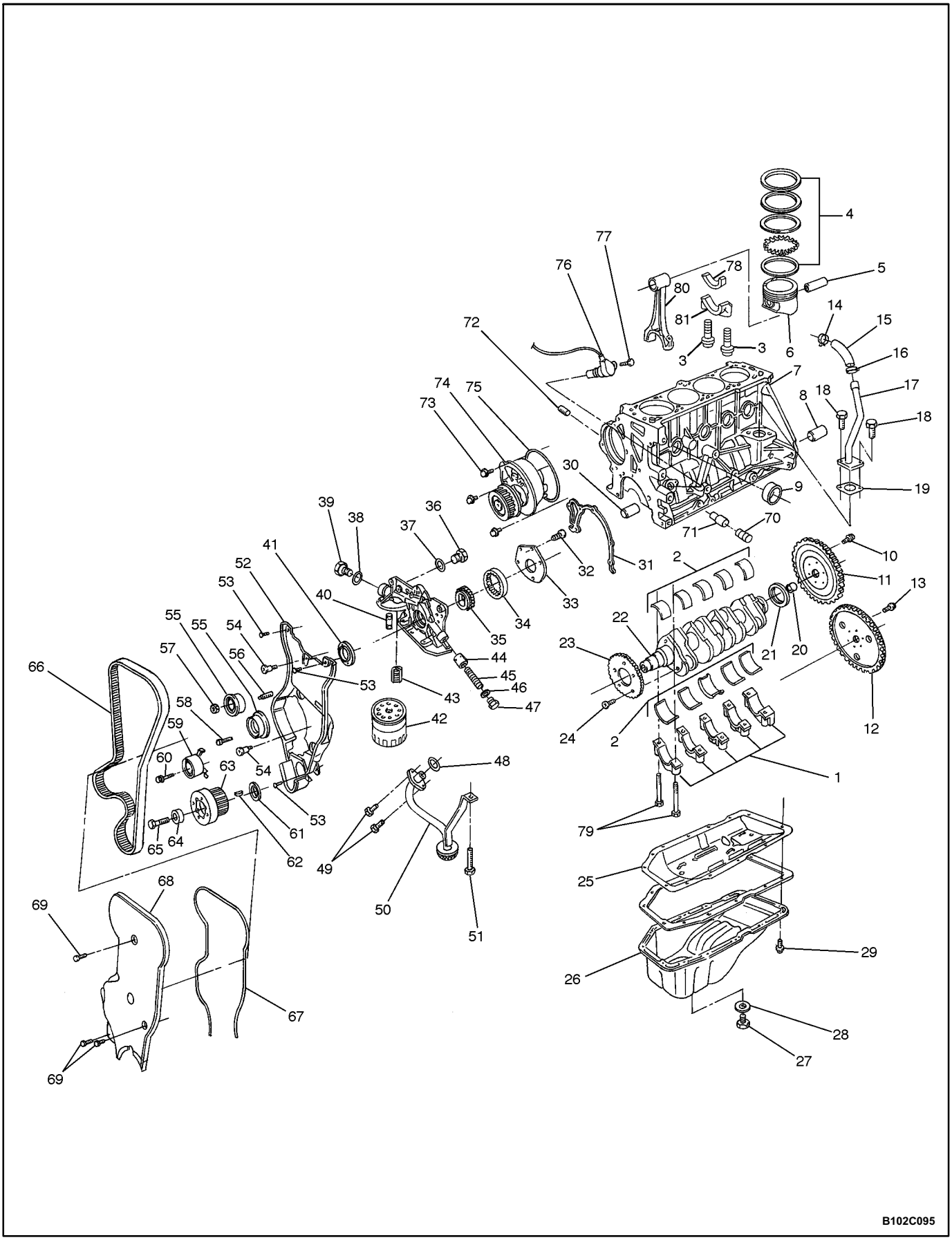
4
77
76
78
5
80
14
81
15
72
3
3
6
16
7
74
75
17
73
8
18
18
30
9
19
39
38
36
37
70
71
41
10
52
32
31
2
11
53
40
33
13
55
55
54
34
35
22
57
56
44
23
21
20
66
53
45
46
43
47
58
42
59
24
2
12
60
63
54
48
1
53
61
79
65
64
62
49
25
68
69
50
51
29
26
67
28
27
69
B102C095

1 Main Bearing Caps
2 Bearings, Main
3 Connecting Rod Bolt
4 Piston Ring Set
5 Piston Pin
6 Piston
7 Engine Block
8 Sleeve
9 Water Jacket Cap
10 Bolt (Manual Transaxle)
11 Flywheel (Manual Transaxle)
12 Flexible Plate (Automatic Transaxle)
13 Bolt (Automatic Transaxle)
14 Clamp
15 Hose
16 Clamp
17 Engine Vent Pipe
18 Bolt
19 Gasket
20 Transaxle Input Shaft Bearing
21 Rear Main Seal
22 Crankshaft
23 Ignition Transmit Disc
24 Bolt
25 Splash Pan and Gasket Assembly
26 Oil Pan
27 Drain Plug
28 Seal Ring
29 Bolt
30 Sleeve
31 Gasket
32 Bolt
33 Oil Pump Gear Cover
34 Ring Gear
35 Gear
36 Plug
37 Washer
38 Washer
39 Bypass Valve Plug
40 Special Screw
41 Seal
42 Oil Filter
43 Bypass Valve
44 Pressure Relief Valve Plunger
45 Pressure Relief Valve Spring
46 Washer
47 Pressure Relief Valve Plug
48 Ring Seal
49 Bolt
50 Oil Suction Pipe
51 Bolt
52 Rear Timing Belt Cover
53 Bolt
54 Special Bolt
55 Idler Pulley
56 Stud
57 Nut
58 Bolt
59 Tensioner
60 Bolt
61 Thrust Inner Washer
62 Woodruff Key
63 Crankshaft Gear
64 Thrust Outer Washer
65 Bolt
66 Camshaft Drive Belt
67 Seal
68 Front Timing Belt Cover
69 Bolt
70 Bushing Plug
71 Bushing
72 Oil Gallery Plug
73 Bolt
74 Water Pump
75 Seal Ring
76 Crankshaft Revolution Sensor
77 Bolt
78 Connecting Rod Bearings
79 Main Bearing Cap Bolts
80 Connecting Rod
81 Connecting Rod Cap

MAINTENANCE AND REPAIR

ON-VEHICLE SERVICE

VALVE COVER

Removal Procedure

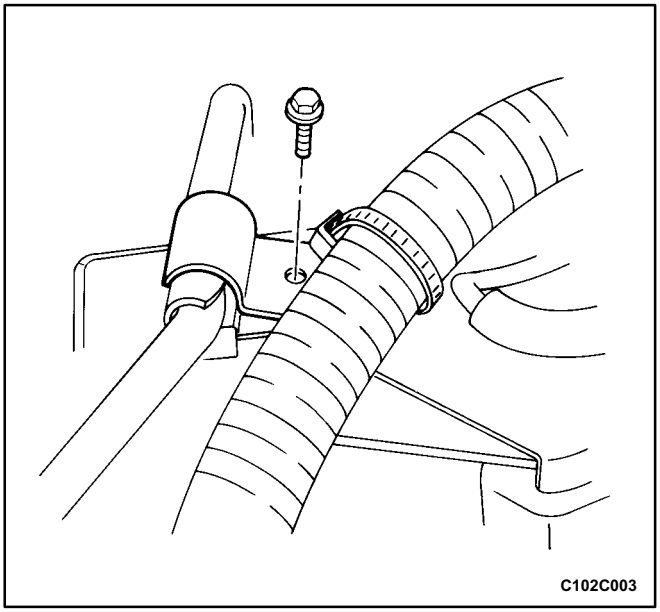

1. Disconnect the negative battery cable.
2. Disconnect the breather tube from the valve cover.
3. Disconnect all of the necessary vacuum lines.
4. Remove the spark plug cover bolts.
5. Remove the spark plug cover.
6. Disconnect the ignition wires from the spark plugs.
7. Remove the power steering hose clamp bolt and position power steering hose clamp clear of the re-pair area.

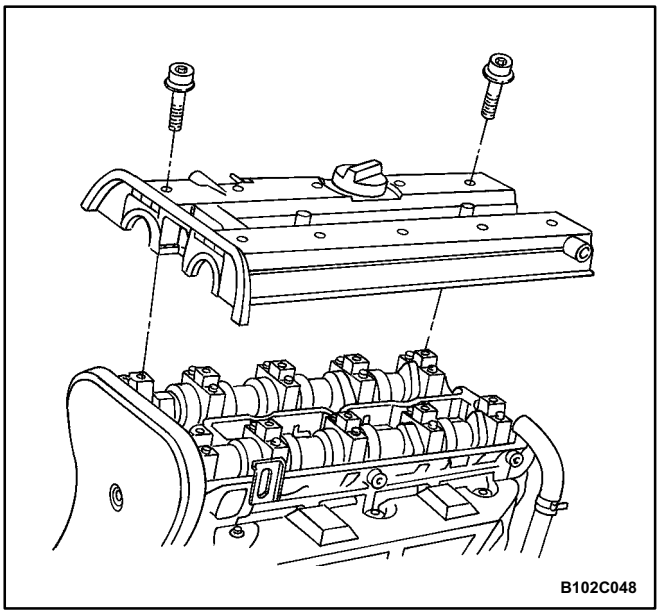

8. Disconnect the camshaft position (CMP) sensor connector (2.2L DOHC).
9. Remove the valve cover bolts.
10. Remove the valve cover washers.
11. Remove the valve cover.

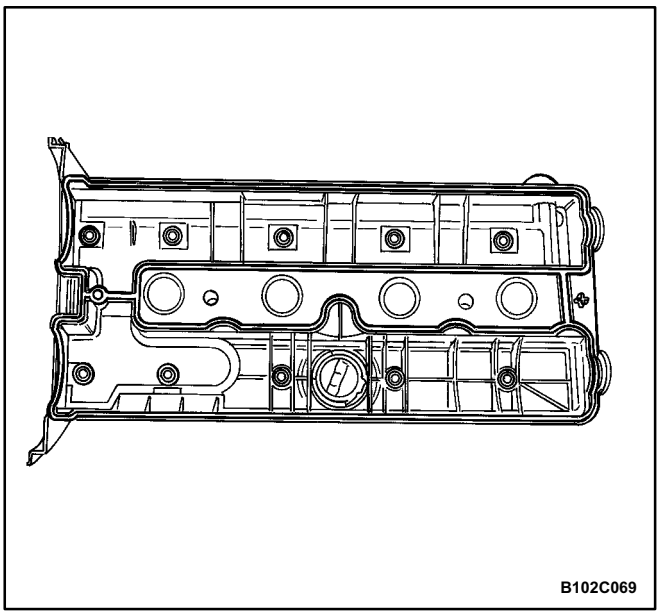

12. Remove the valve cover gasket from the valve co-ver.

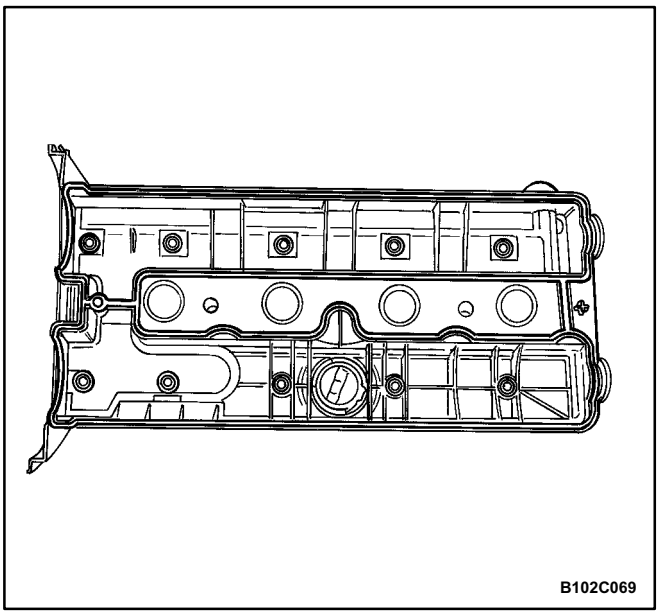

Installation Procedure

1. Apply a small amount of gasket sealant to the cor-ners of the front camshaft caps and the top of the rear valve cover-to-cylinder head seal.
2. Install the new valve cover gasket to the valve co-ver.

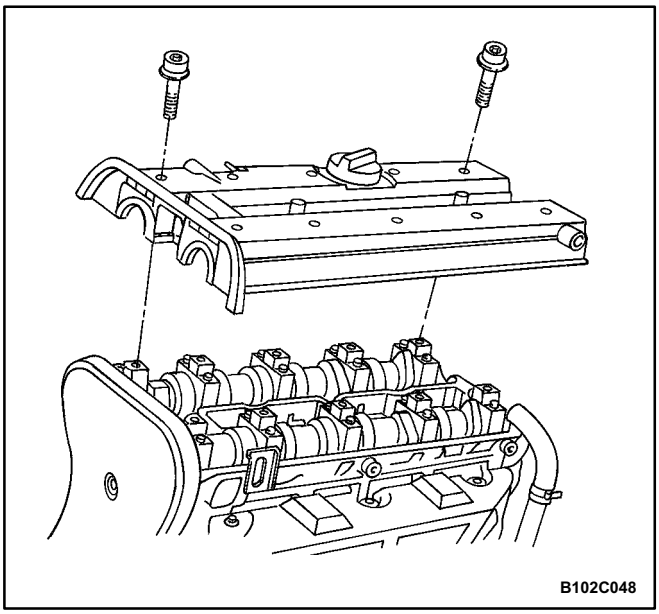

3. Install the valve cover.
4. Install the valve cover washers.
5. Install the valve cover bolts.

Tighten

Tighten the valve cover bolts to 8 N•m (71 lb•in).

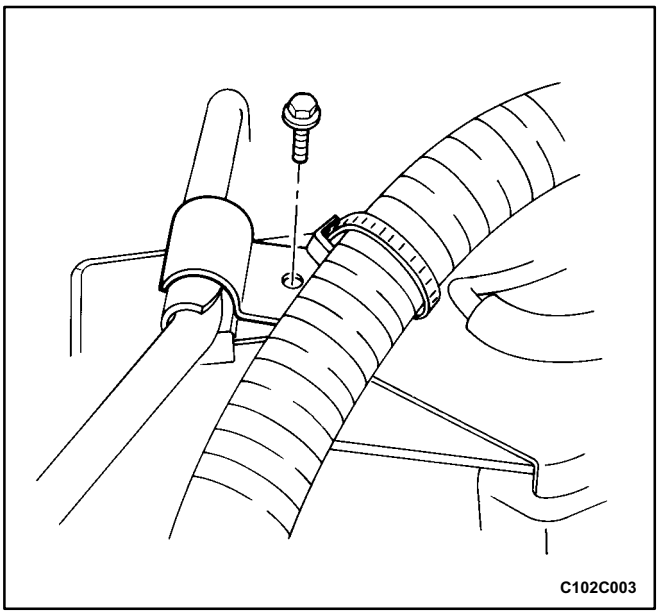

6. Connect the ignition wires to the spark plugs.
7. Install the spark plug cover.
8. Install the spark plug cover bolts.

Tighten

Tighten the spark plug cover bolts to 3 N•m (27 lb•in).

9. Connect all of the necessary vacuum lines.
10. Connect the breather tube to the valve cover.
11. Connect the camshaft position (CMP) sensor co-nnector (2.2L DOHC).
12. Position the power steering pressure hose in place and install the bolt.

Tighten

Tighten the power steering hose clamp bolt to 8 N•m (71 lb•in).

13. Connect the negative battery cable.

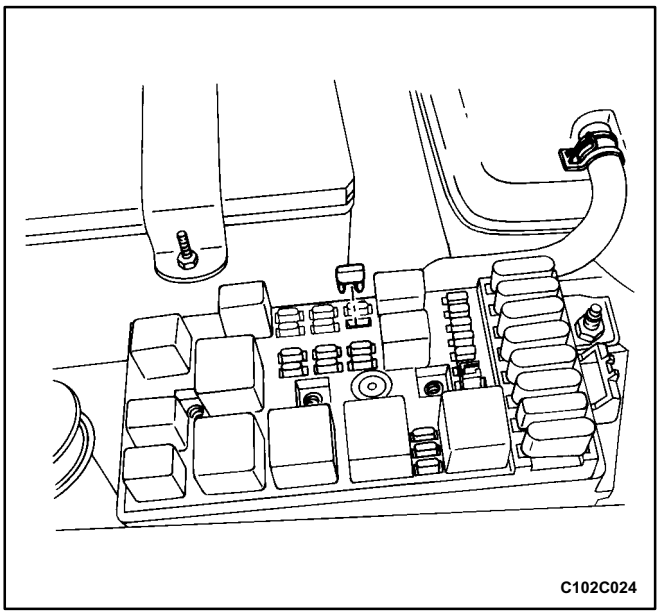

CYLINDER HEAD AND GASKET

(Left-Hand Drive Shown, Right-Hand Drive Similar)

Tools Required

KM-470-B Angular Torque Gauge

J-28467-B Engine Assembly Lift Support

Removal Procedure

1. Remove the fuel pump fuse.
2. Start the engine. After it stalls, crank the engine for 10 seconds to rid the fuel system of fuel pressure.
3. Disconnect the negative battery cable.
4. Disconnect the ECM ground terminal
5. Drain the engine coolant. Refer to *Section 1D, En-gine Cooling.*

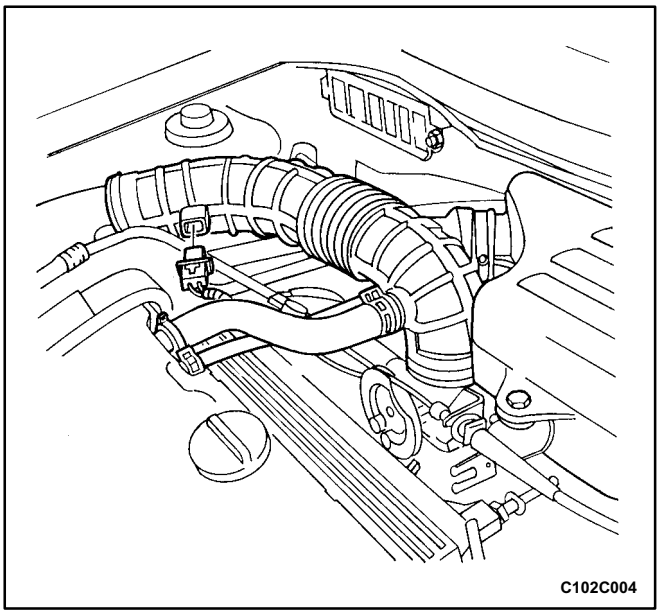

6. Disconnect the manifold air temperature sensor connector.
7. Disconnect the breather tube from the valve cover.
8. Remove the resonator retaining bolts and the re-sonator.
9. Remove the air intake tube.
10. Remove the canister purge solenoid bracket bolt and reposition the cannister purge solenoid clear of the repair area.

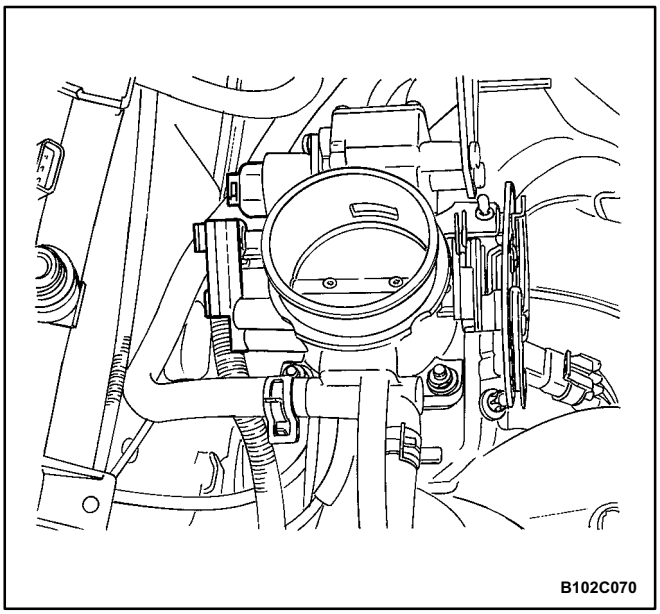

11. Disconnect the DIS ignition coil connector.
12. Disconnect the oxygen sensor connector.
13. Disconnect the idle air control valve (IAC) connec-tor.
14. Disconnect the throttle position sensor (TPS) co-nnector.
15. Disconnect the engine coolant temperature (ECT) sensor connector.
16. Disconnect the coolant temperature sensor (CTS) connector.
17. Disconnect the camshaft position (CMP) sensor connector (2.2L DOHC).

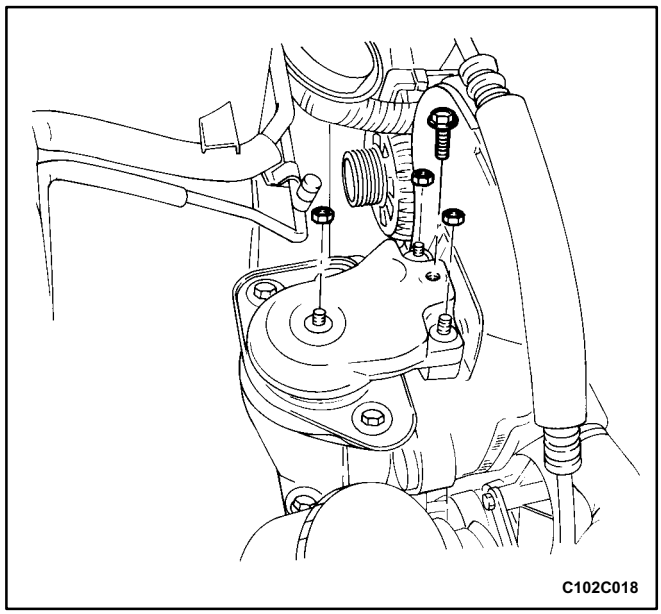

18. Remove the air filter housing bolts.
19. Remove the air filter housing.
20. Remove the right front wheel. Refer to *Section 2E, Tires and Wheels*.
21. Remove the right front wheel well splash shield. Refer to *Section 9R, Body Front End.*
22. Install the engine assembly lift support J-28467-B.
23. Remove the right engine mount bracket and bolts.

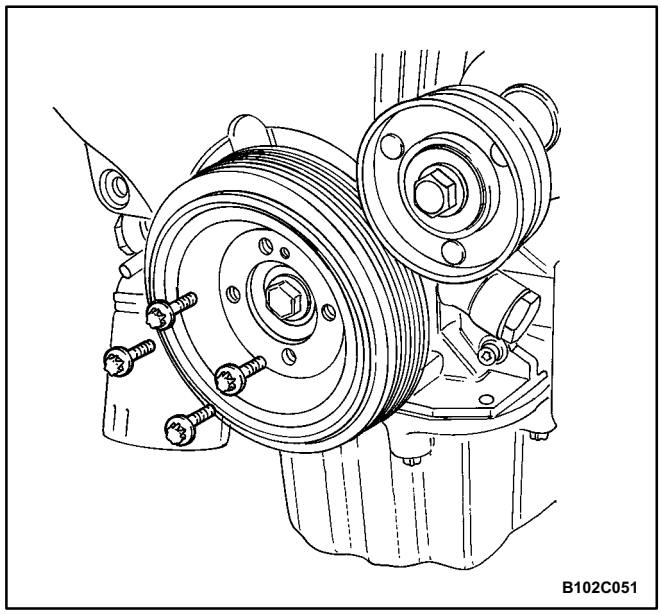

24. Disconnect the upper radiator hose at the thermo-stat housing.
25. Remove the serpentine accessory drive belt. Refer to *Section 6B, Power Steering Pump.*
26. Remove the crankshaft pulley bolts.
27. Remove the crankshaft pulley.

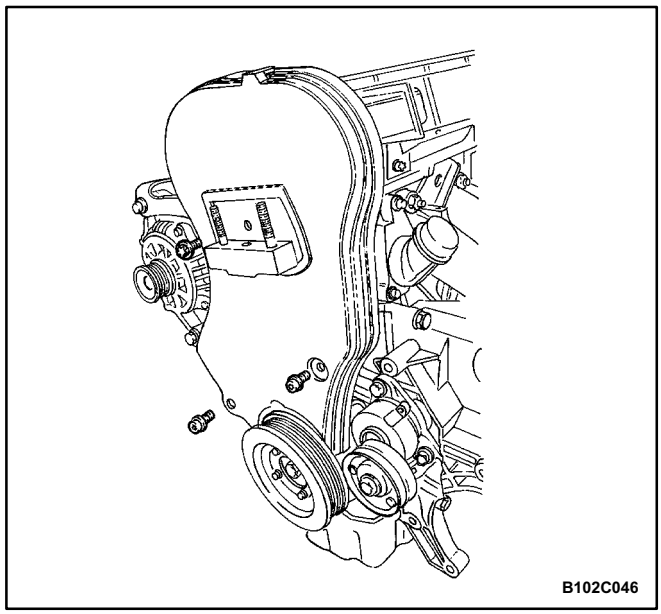

28. Remove the front timing belt cover bolts.
29. Remove the front timing belt cover.

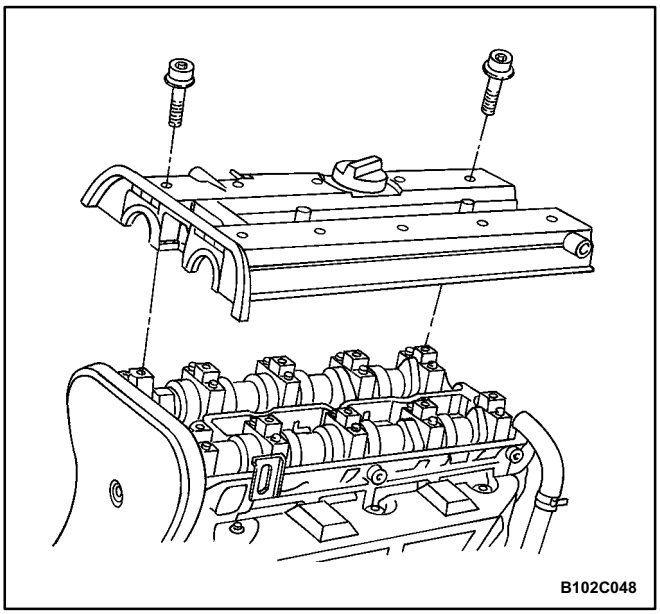

30. Remove the timing belt. Refer to Timing Belt" in this section.
31. Disconnect the breather tube at the valve cover.
32. Remove the spark plug cover bolts.
33. Remove the spark plug cover.
34. Disconnect the ignition wires from the spark plugs.
35. Remove the valve cover bolts.
36. Remove the valve cover washers.
37. Remove the valve cover and the valve cover gasket.

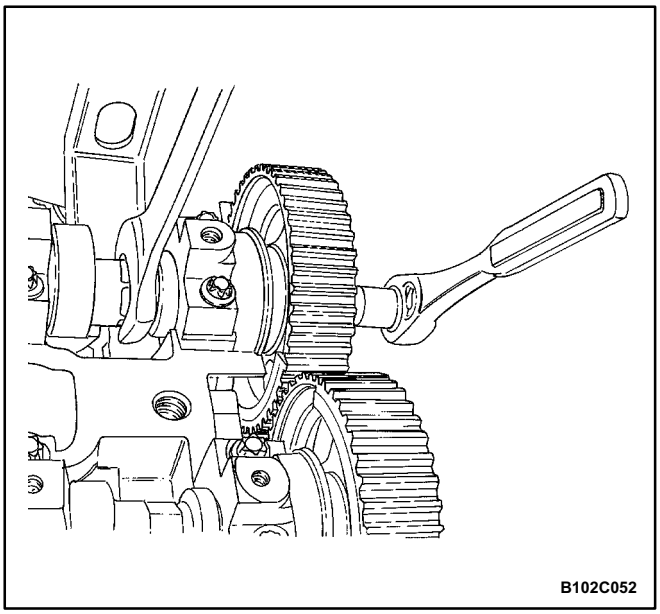

Notice: Take extreme care to prevent any scratches, nicks or damage to the camshafts.

38. While holding the intake camshaft firmly in place, remove the intake camshaft gear bolt.
39. Remove the intake camshaft gear.
40. While holding the exhaust camshaft firmly in place, remove the exhaust camshaft gear bolt.
41. Remove the exhaust camshaft gear.

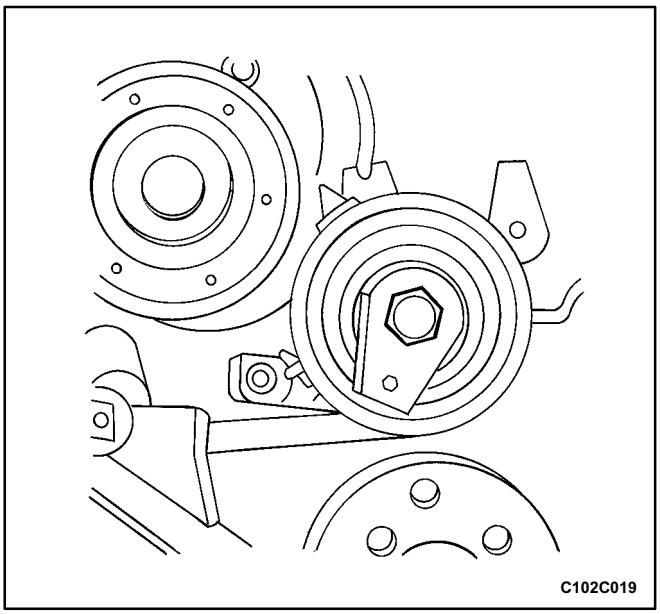

42. Remove the timing belt automatic tensioner bolts.
43. Remove the timing belt automatic tensioner.

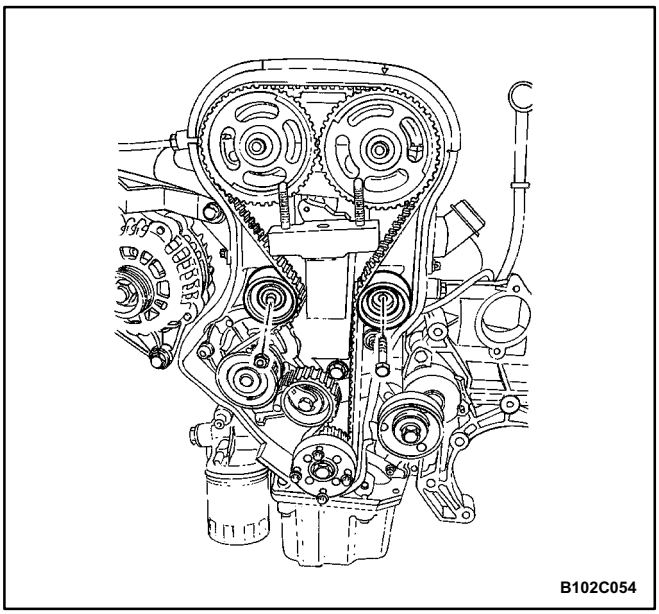

44. Remove the timing belt idler pulley nuts.
45. Remove the timing belt idler pulleys.
46. Remove the engine mount bolts.
47. Remove the engine mount.

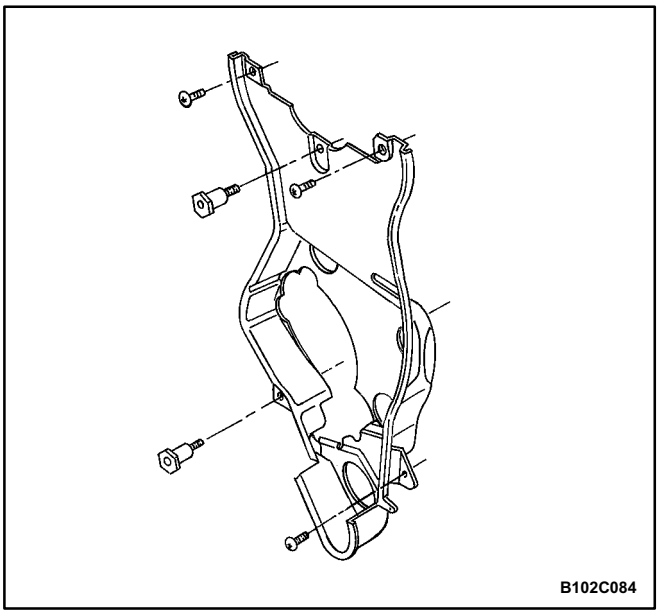

48. Remove the rear timing belt cover bolts.
49. Remove the rear timing belt cover.

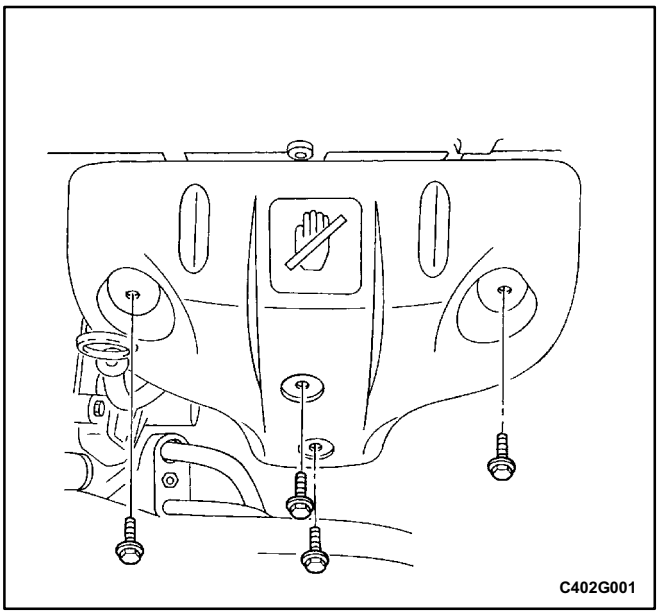

50. Remove the exhaust manifold heat shield nuts and the heat shield.

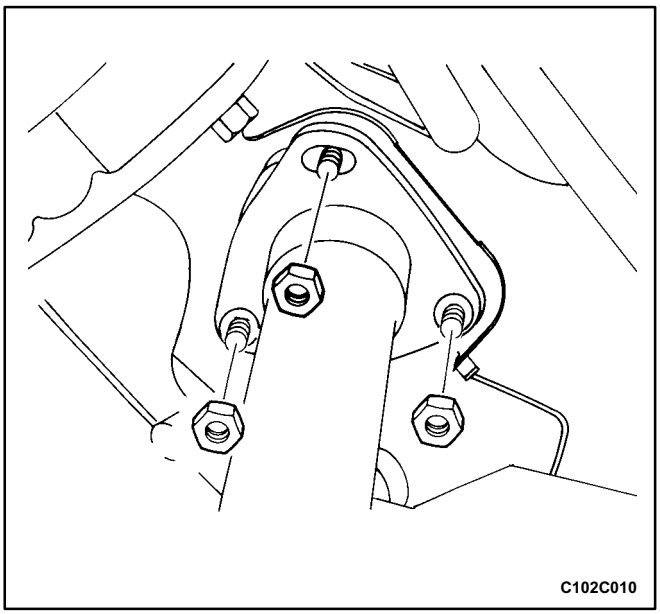

51. Remove the exhaust flex pipe retaining nuts from the exhaust manifold studs (2.0L DOHC).

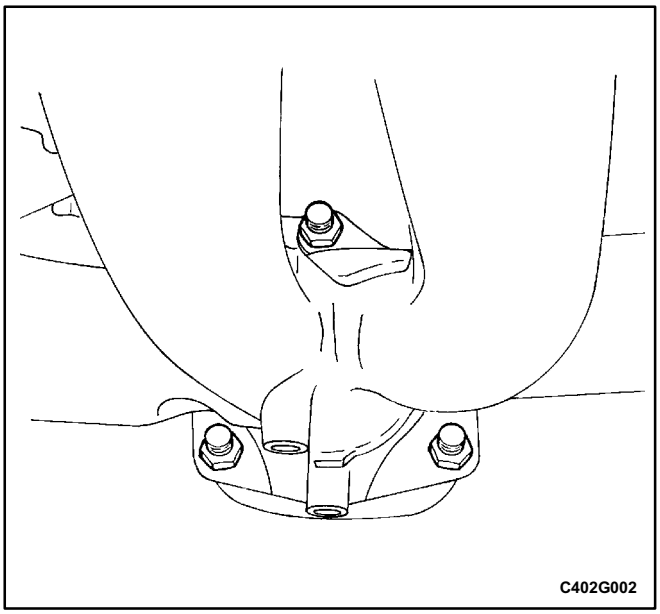

52. Remove the auxiliary catalytic converter upper flange nuts (2.2L DOHC).
53. Disconnect the vacuum hoses, as needed.

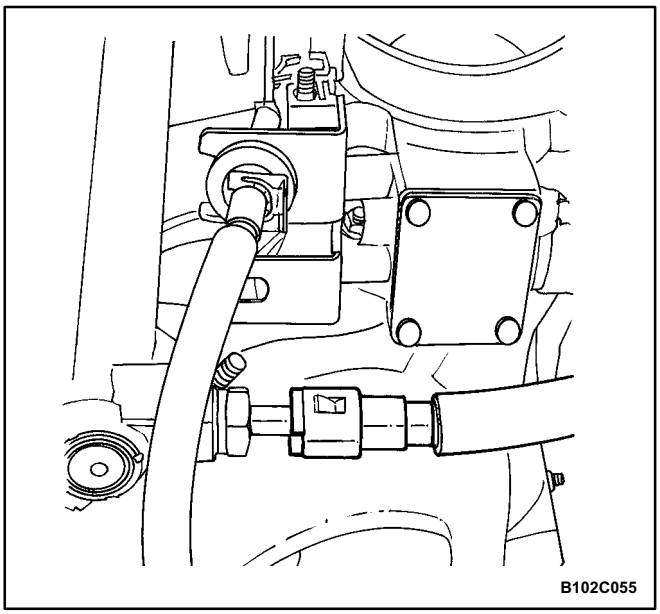

54. Disconnect the fuel return line at the fuel pressure regulator.
55. Disconnect the fuel feed line at the fuel rail.
56. Disconnect the coolant hose at the rear cylinder head and ignition coil EGR bracket.
57. Disconnect the surge tank coolant hose at the throttle body.
58. Remove the fuel rail assembly. Refer to *Section 1F, Engine Controls.*

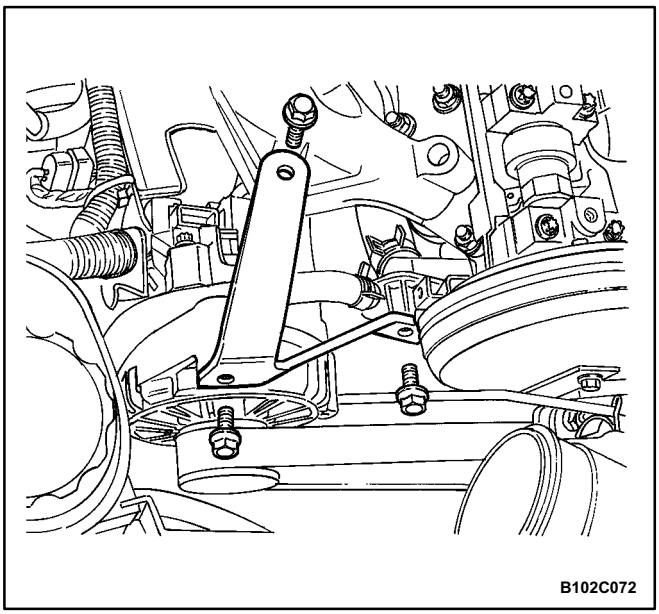

59. Remove the alternator-to-intake manifold support bracket bolts at the cylinder head coolant bypass and the intake manifold.
60. Remove the alternator support bracket.
61. Remove the intake manifold-to-alternator strap bracket bolt and loosen the bolt on the alternator.
62. Move the strap clear of the intake manifold.
63. Remove the canister purge solenoid bracket bolt and move the bracket clear (if equipped).

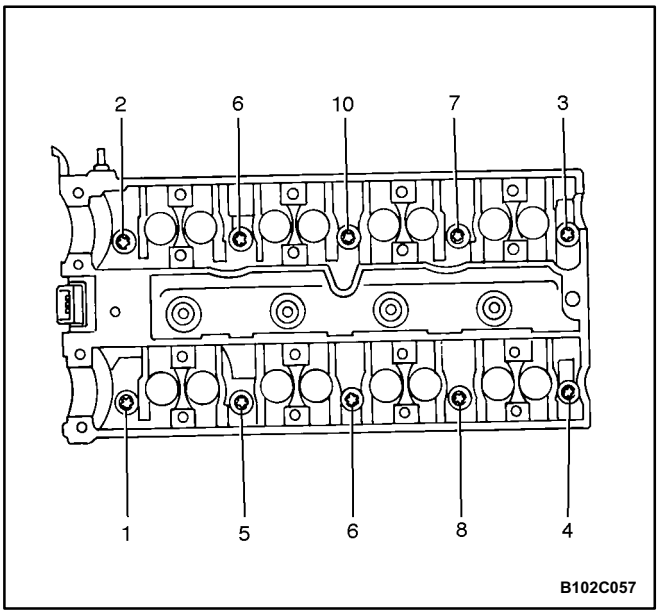

64. Disconnect the throttle cable at the throttle body and the intake manifold.
65. Loosen all of the cylinder head bolts gradually and in the sequence shown.
66. Remove the cylinder head bolts.
67. Remove the cylinder head with the intake manifold and the exhaust manifold attached.

Notice: Prevent any engine oil or coolant from entering the cylinders when removing the cylinder head.

68. Remove the cylinder head gasket.

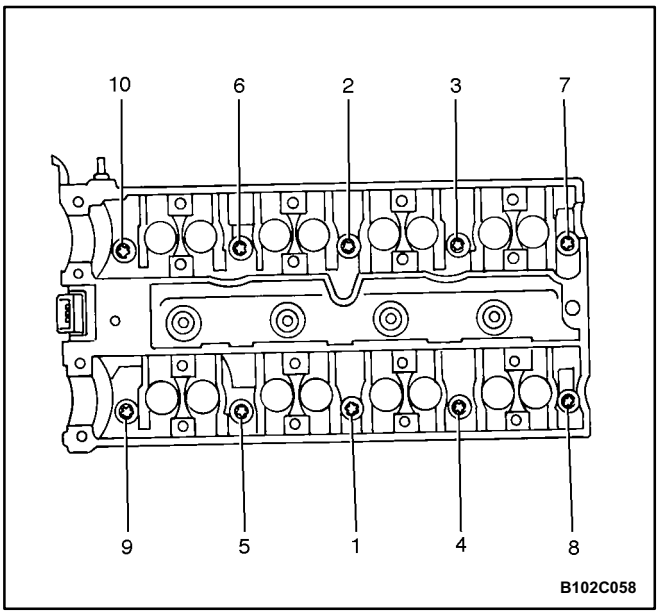

Cleaning Procedure

1. Clean the gasket surfaces of the cylinder head and the engine block.
2. Make sure the gasket surfaces of the cylinder head and the engine block are free of nicks and heavy scratches.
3. Clean the cylinder head bolts.
4. Inspect the cylinder head for warpage. Refer to "Cylin-der Head and Valve Train Components" in this sec-tion.

Installation Procedure

1. Install the cylinder head gasket.
2. Install the cylinder head with the intake manifold and the exhaust manifold attached.
3. Install the cylinder head bolts.
4. Tighten the cylinder head bolts gradually and in the sequence shown.

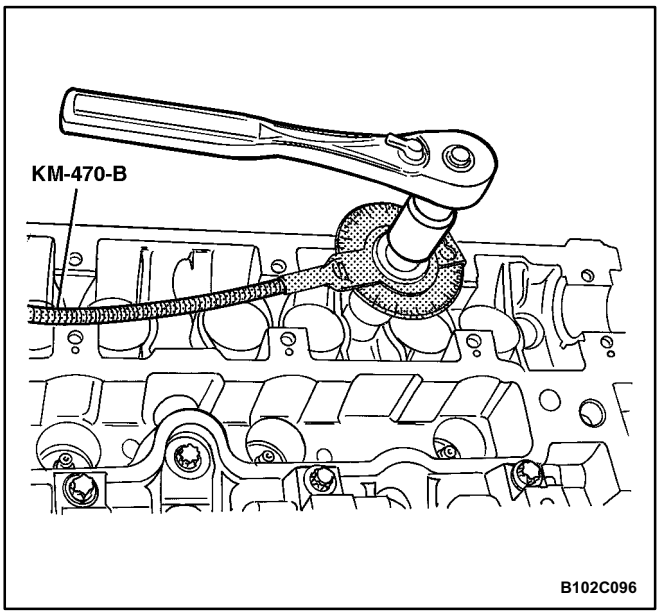

Tighten

Tighten the cylinder head bolts to 25 N•m (18 lb•ft) and turn the bolts another 3 turns of 90 degrees using the angular torque gauge KM-470-B.

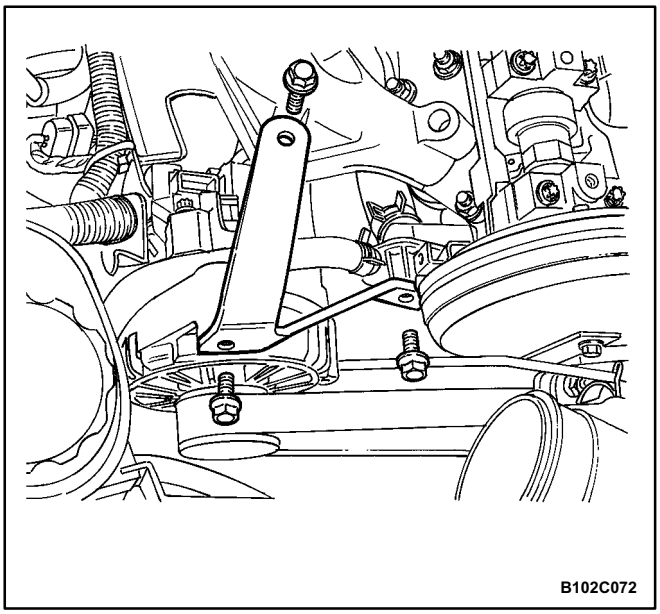

5. Connect the throttle cable at the throttle body and the intake manifold.
6. Install the alternator-to-intake manifold support bracket.
7. Install the intake alternator-to-manifold support bracket bolts.

Tighten

Tighten the alternator-to-intake manifold support bracket bolts at the intake manifold to 35 N•m (26 lb•ft).

8. Install the intake manifold support bracket bolts to the alternator.

Tighten

Tighten the alternator-to-intake manifold support bracket bolt at the alternator to 20 N•m (15 lb•ft).

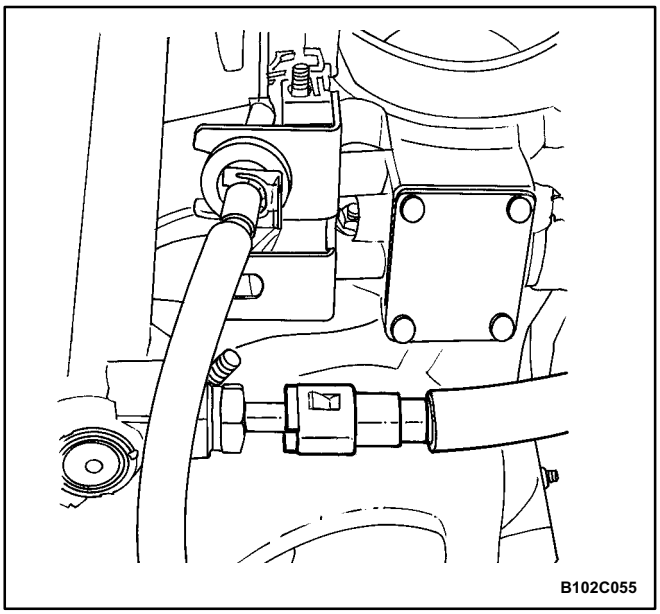

9. Connect the surge tank coolant hose at the throttle body.
10. Connect the coolant hose to the rear cylinder head and ignition coil EGR bracket.
11. Connect the fuel feed line at the fuel rail.
12. Connect the fuel return line at the fuel rail.
13. Connect all of the necessary vacuum hoses.
14. Install the fuel rail assembly. Refer to *Section 1F, Engine Controls (2.0L DOHC).*

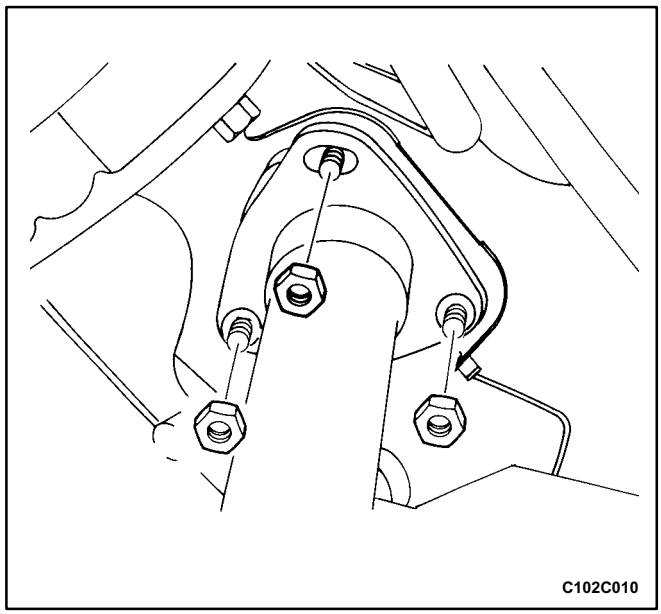

15. Install the exhaust flex pipe retaining nuts to the ex-haust manifold studs (2.0L DOHC).

Tighten

Tighten the exhaust flex pipe retaining nuts to 22 N•m (16 lb•ft).

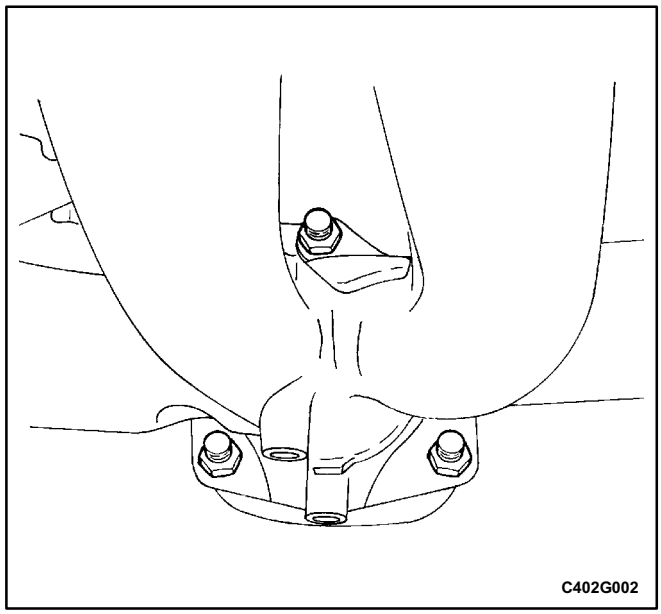

16. Install the auxiliary catalytic converter nuts (2.2L DOHC).

Tighten

Tighten the auxiliary catalytic converter-to-exhaust manifold nuts to 40 N•m (30 lb•ft).

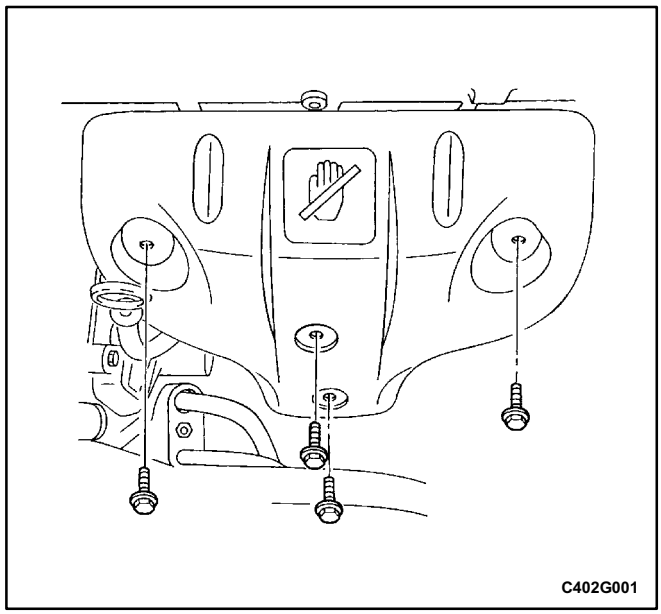

17. Install the exhaust manifold heat shield bolts.

Tighten

Tighten the exhaust manifold heat shield bolts to 8 N•m (71 lb•in).

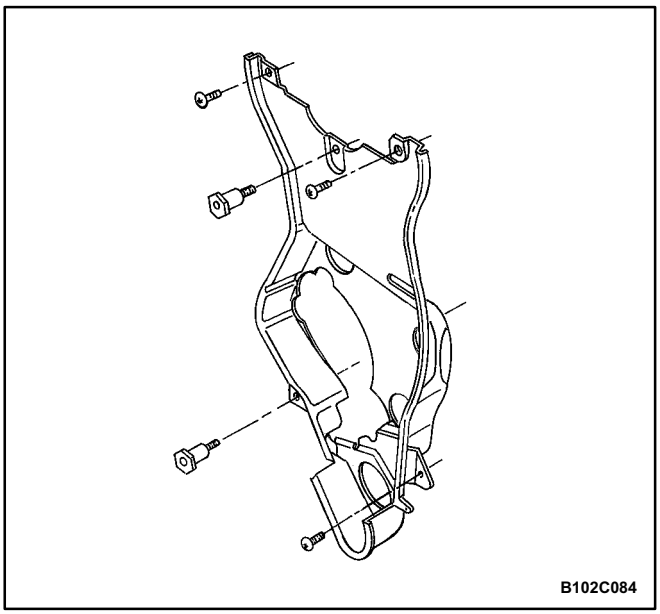

18. Install the rear timing belt cover.
19. Install the rear timing belt cover bolts.

Tighten

Tighten the rear timing belt cover bolts to 6 N•m (53 lb•in).

20. Install the engine mount bolts.

Tighten

Tighten the engine mount bolts to 60 N•m (44 lb•ft).

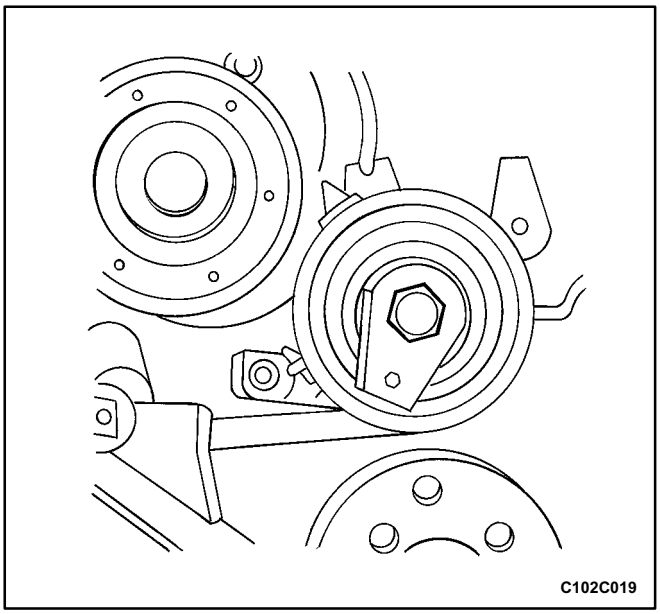

21. Install the timing belt automatic tensioner.
22. Install the timing belt automatic tensioner bolt.

Tighten

Tighten the timing belt automatic tensioner bolts to 25 N•m (18 lb•ft).

23. Install the timing belt idler pulleys.
24. Install the timing belt idler pulley nuts.

Tighten

Tighten the timing belt idler pulley nuts to 25 N•m (18 lb•ft).

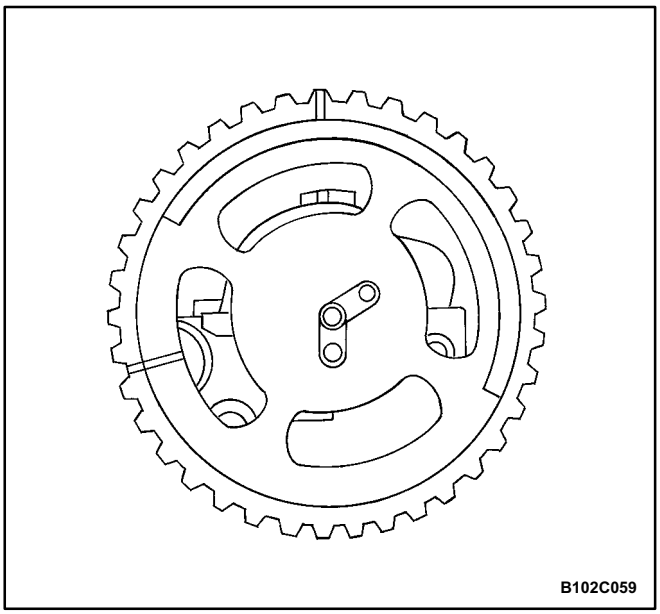

25. Install the camshaft gears with the timing marks at the front.
26. Insert the guide pin of the intake camshaft into the "IN" bore.
27. Insert the guide pin of the exhaust camshaft into the "EX" bore.

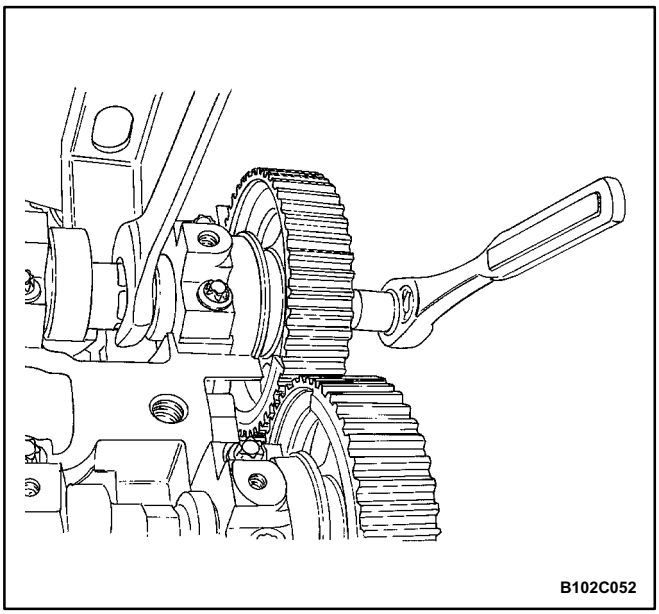

28. Install the camshaft gears by counterholding on the hex of the camshaft with an open-ended wrench.
29. Install the intake camshaft gear with a new bolt to the camshaft.

Tighten

Tighten the intake camshaft gear bolt to 50 N•m (37 lb•ft), turn the bolt another 60 degrees and 15 de-grees using the angular torque gauge.

30. While holding the exhaust camshaft firmly in place, install the exhaust camshaft gear bolt.

Tighten

Tighten the exhaust camshaft gear bolt to 50 N•m (37 lb•ft), turn the bolt another 60 degrees and 15 de-grees using the angular torque gauge.

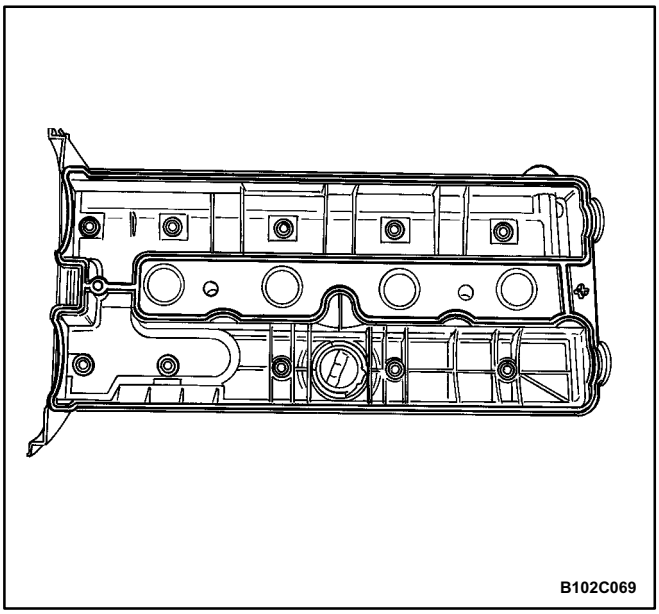

31. Apply a small amount of gasket sealant to the cor-ners of the front camshaft caps and to the top of the rear valve cover-to-cylinder head seal.
32. Install the valve cover and the valve cover gasket.
33. Install the valve cover washers.
34. Install the valve cover bolts.

Tighten

Tighten the valve cover bolts to 8 N•m (71 lb•in).

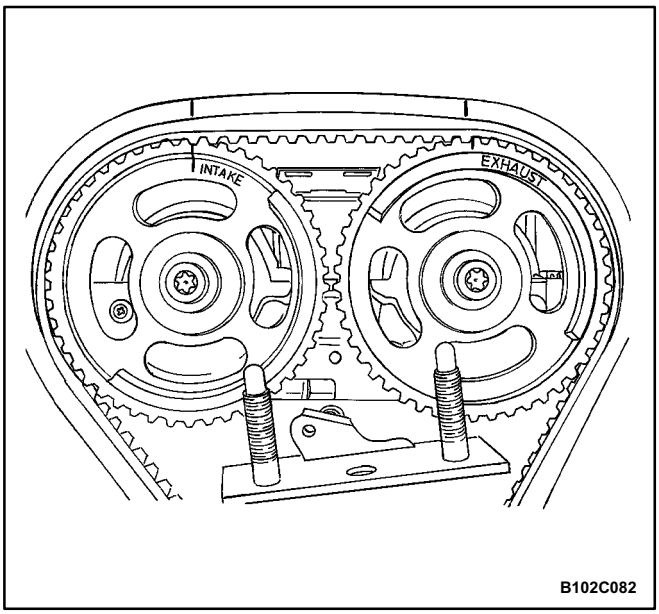

35. Connect the ignition wires to the spark plugs.
36. Install the spark plug cover.
37. Install the spark plug cover bolts.

Tighten

Tighten the spark plug cover bolts to 3 N•m (27 lb•in).

38. Connect the breather tube to the valve cover.
39. Align the timing marks on the camshaft gears to the notches on the valve cover, using the intake gear mark for the intake gear and the exhaust gear mark for the exhaust gear.

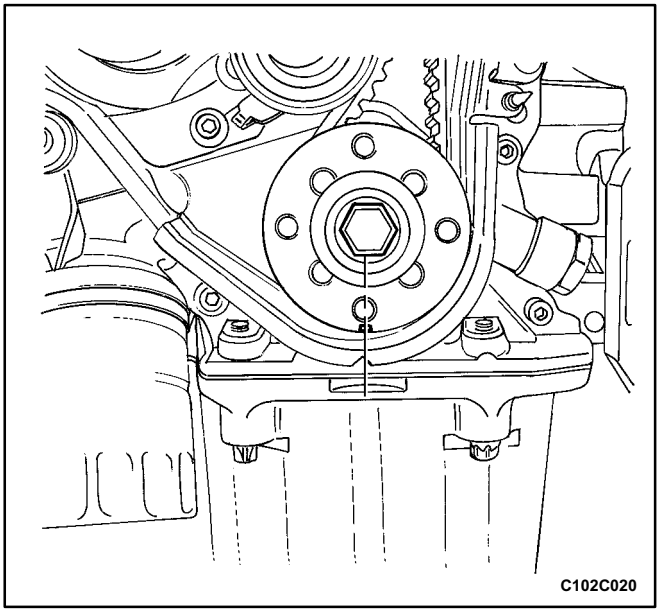

40. Align the mark on the crankshaft gear with the notch at the bottom of the rear timing belt cover.

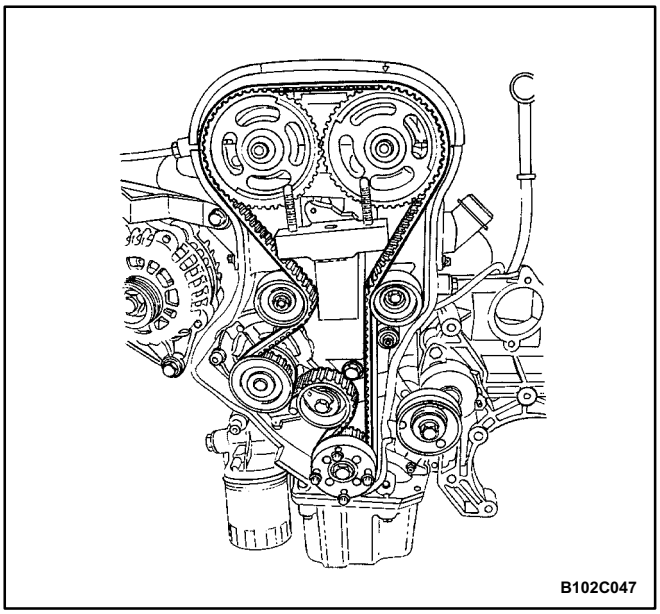

41. Install the timing belt. Refer to ``Timing Belt'' in this section.
42. Check and adjust the timing belt tension. Refer to Timing Belt Check and Adjust'' in this section.

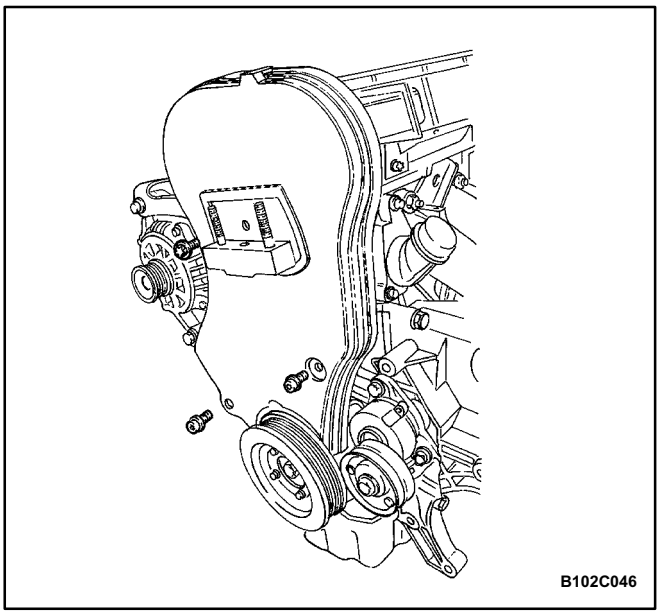

43. Install the front timing belt cover.
44. Install the front timing belt cover bolts.

Tighten

Tighten the upper and lower front timing belt cover bolts to 8 N•m (71 lb•in).

45. Install the crankshaft pulley.
46. Install the crankshaft pulley bolts.

Tighten

Tighten the crankshaft pulley bolts to 20 N•m (15 lb•ft).

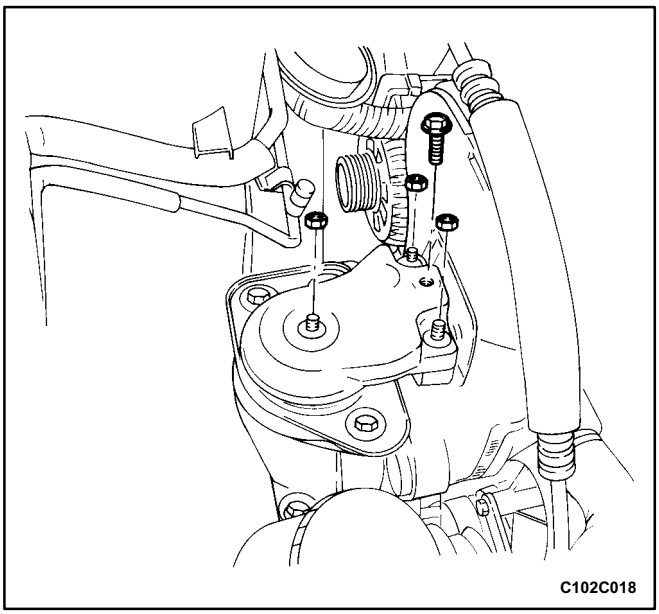

47. Install the right engine mount bracket and retaining bolts and nut.

Tighten

Tighten the right engine mount bracket retaining bolts and nut to 60 N•m (44 lb•ft).

48. Remove the engine assembly lift support J28467B.
49. Install the serpentine accessory drive belt. Refer to *Section 6B, Power Steering Pump.*
50. Connect the upper radiator hose to the thermostat housing.
51. Install the right front wheel well splash shield. Refer to *Section 9R, Body Front End.*
52. Install the right front wheel. Refer to *Section 2E, Tires and Wheels.*

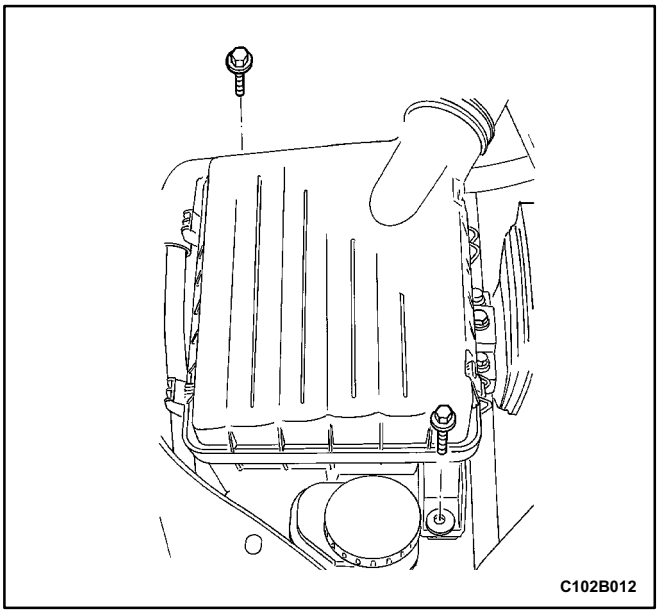

53. Install the air filter housing.
54. Install the air filter housing bolts.

Tighten

Tighten the air filter housing bolts to 8 N•m (71 lb•in).

55. Connect the air intake tube to the throttle body.
56. Connect the breather tube to the valve cover.
57. Connect the manifold air temperature sensor con-nector.
58. Install the resonator and the retaining bolts.

Tighten

Tighten the resonator retaining bolts to 8 N•m (71 lb•in).

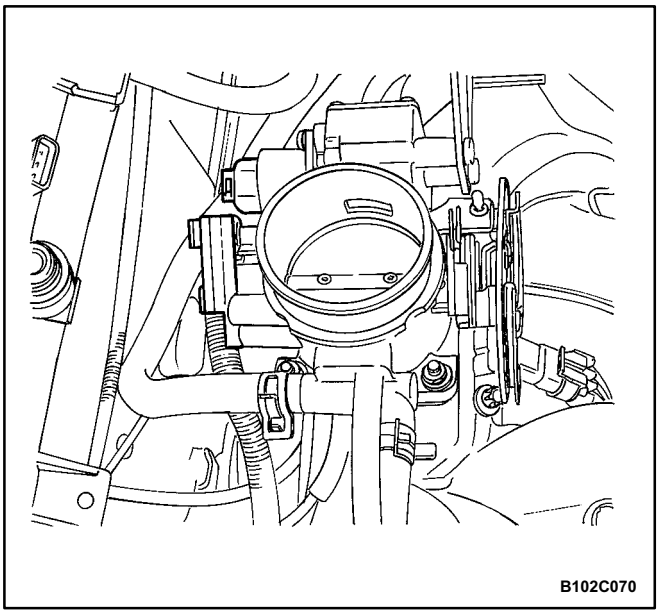

59. Connect camshaft position (CMP) sensor connec-tor.
60. Connect the coolant temperature sensor connector.
61. Connect the engine coolant temperature sensor connector.
62. Connect the idle air control valve connector.
63. Connect the throttle position sensor connector.
64. Install the canister purge solenoid bracket bolt.

Tighten

Tighten the canister purge solenoid bracket bolt to 5 N•m (44 lb•in).

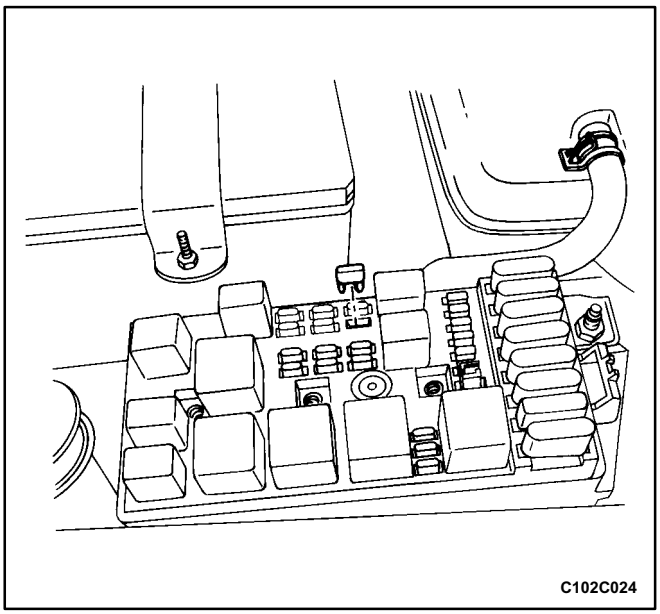

65. Connect the DIS ignition coil connector.
66. Connect the oxygen sensor connector.
67. Connect the ECM ground terminal.
68. Install the fuel pump fuse.
69. Connect the negative battery ground cable.
70. Refill the engine cooling system. Refer to *Section 1D, Engine Cooling.*

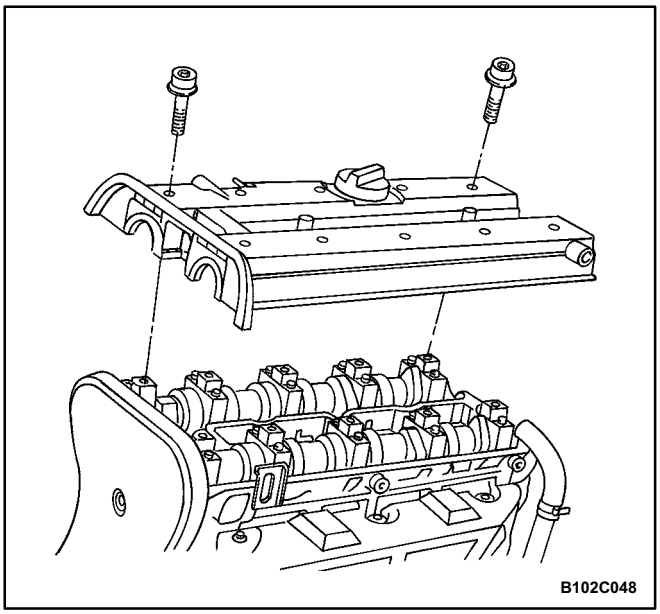

CAMSHAFTS

Removal Procedure

1. Remove the timing belt. Refer to "Timing Belt" in this section.
2. Disconnect the breather tube at the valve cover.
3. Disconnect the crankcase ventilation tube at the valve cover.
4. Remove the spark plug cover bolts.
5. Remove the spark plug cover.
6. Disconnect the ignition wires from the spark plugs.
7. Disconnect the camshaft position (CMP) sensor connector (2.2L DOHC).
8. Remove the valve cover bolts.
9. Remove the valve cover washers.
10. Remove the valve cover and the valve cover gasket.

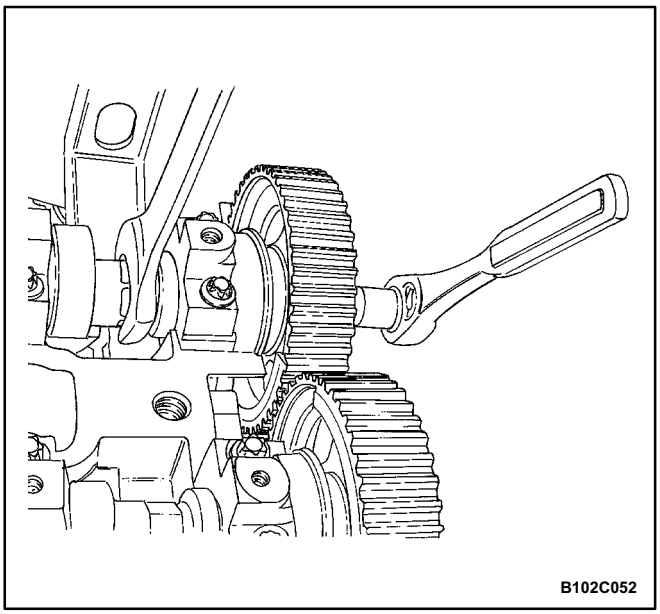

Notice: Take extreme care to prevent any scratches, nicks or damage to the camshafts.

11. While holding the intake camshaft firmly in place, remove the intake camshaft gear bolt.
12. Remove the intake camshaft gear.
13. While holding the exhaust camshaft firmly in place, remove the exhaust camshaft gear bolt.
14. Remove the exhaust camshaft gear.

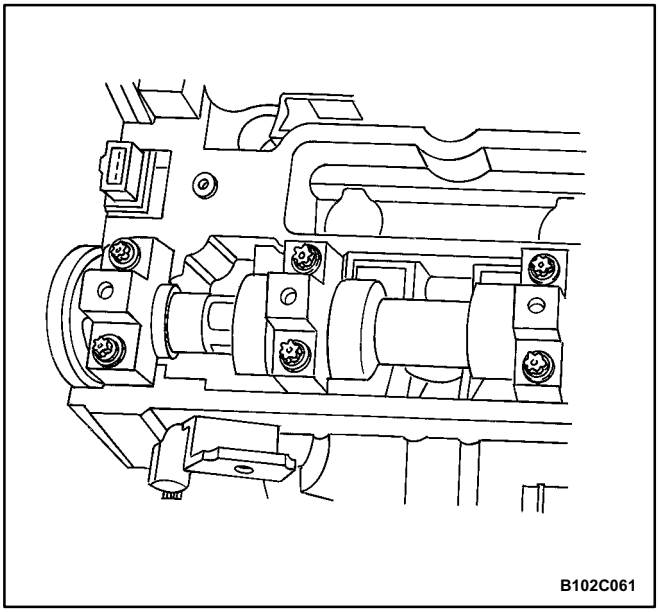

15. Loosen the camshaft bearing cap bolts in stages of one-half to one turn.
16. Remove the camshaft bearing cap bolts from the cylinder head.
17. Remove the camshafts.
18. Remove the seal ring from the camshafts.

Important: The camshaft must detach evenly from the bearing seats in the front guide bearing.

19. Check the camshaft and bearing seats for wear and replace them if necessary.

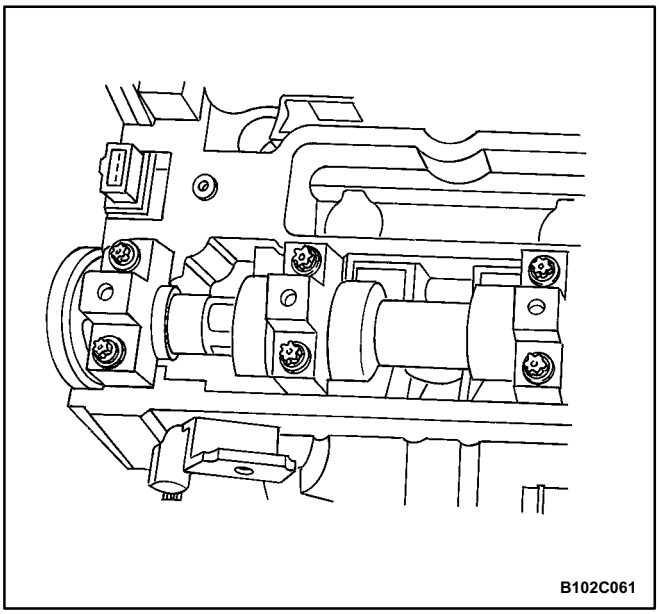

Installation Procedure

Notice: Take extreme care to prevent any scratches, nicks or damage to the camshafts.

1. Lubricate the camshaft journals and the camshaft caps with engine oil.
2. Install the intake camshaft.
3. Install the intake camshaft caps in their original posi-tions.
4. Install the intake camshaft cap bolts.
5. Install the exhaust camshaft.
6. Install the exhaust camshaft caps in their original positions.
7. Install the exhaust camshaft cap bolts.
8. Tighten the camshaft cap bolts gradually and in the sequence shown for each camshaft cap.

Tighten

Tighten the camshaft bearing cap bolts to 8 N•m (71 lb•in).

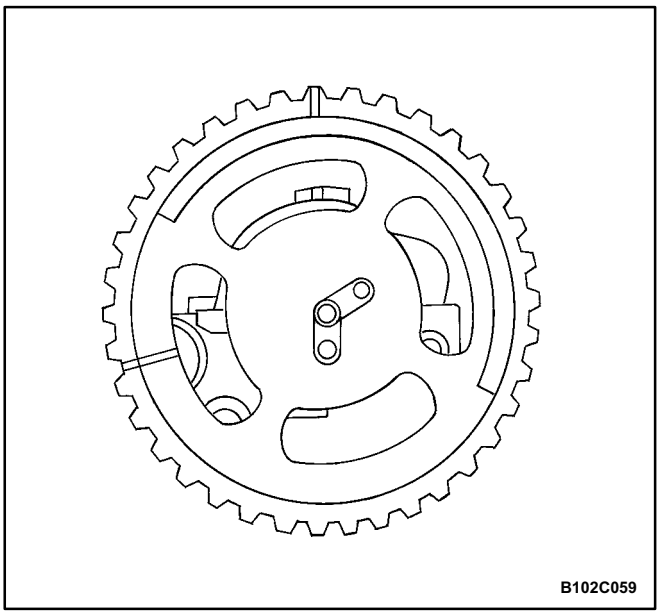

9. Measure the intake camshaft end play and the ex-haust camshaft end play. Refer to "Engine Specifi-cations" in this section.
10. Install the intake camshaft gear.
11. While holding the intake camshaft firmly in place, install the intake camshaft gear bolt.

Tighten

Tighten the intake camshaft gear bolt to 50 N•m (37 lb•ft), turn the bolt another 60 degrees and 15 degrees using the angular torque gauge.

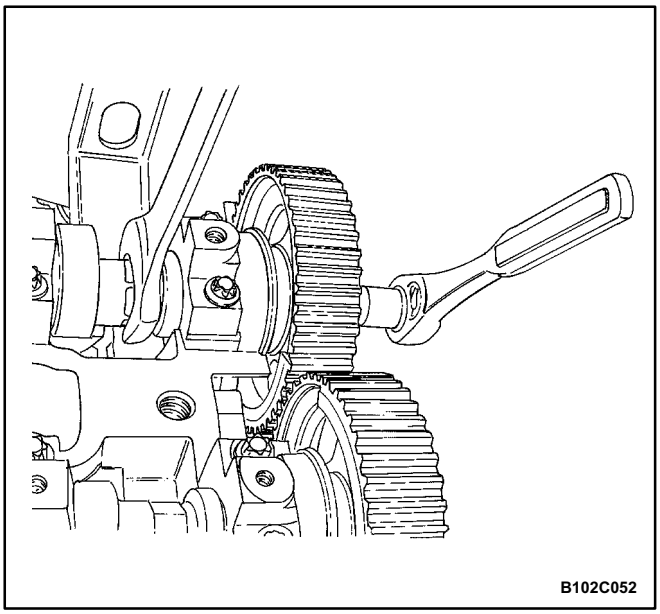

12. Install the exhaust camshaft gear.
13. While holding the exhaust camshaft firmly in place, install the exhaust camshaft gear bolt.

Tighten

Tighten the exhaust camshaft gear bolt to 50 N•m (37 lb•ft), turn the bolt another 60 degrees and 15 degrees using the angular torque gauge.

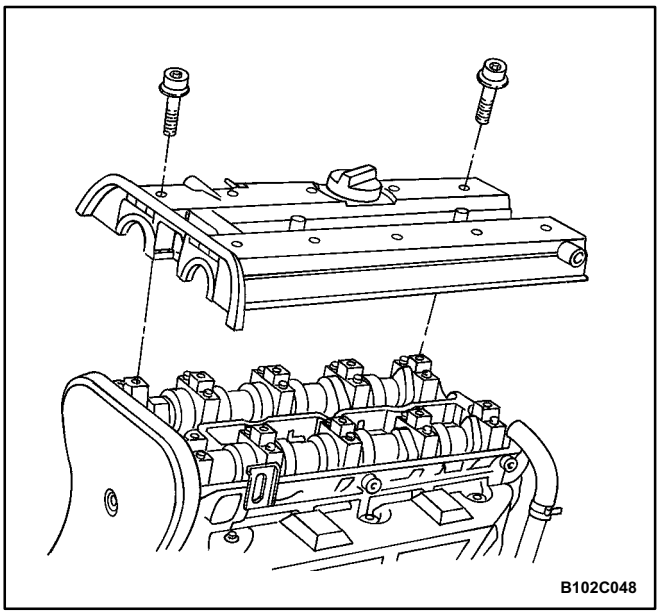

14. Install the valve cover and the valve cover gasket.
15. Install the valve cover washers.
16. Install the valve cover bolts.

Tighten

Tighten the valve cover bolts to 8 N•m (71 lb•in).

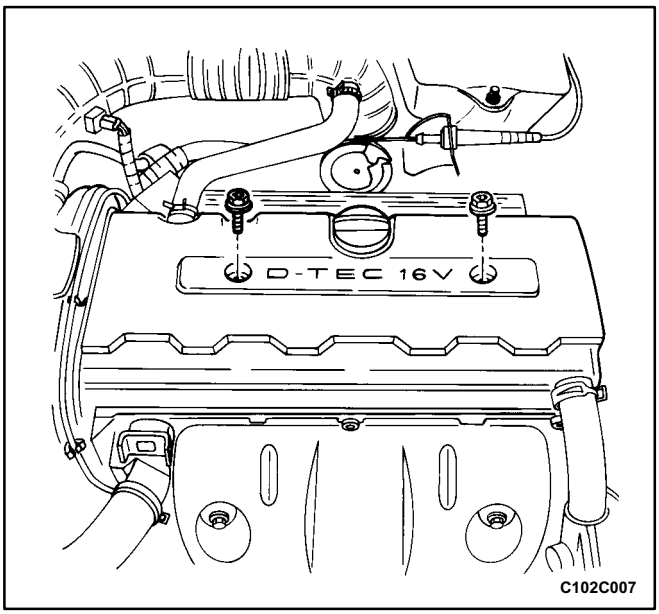

17. Connect the ignition wires to the spark plugs.
18. Connect the camshaft position (CMP) sensor connector (2.2L DOHC).
19. Install the spark plug cover.
20. Install the spark plug cover bolts.

Tighten

Tighten the spark plug cover bolts to 3 N•m (27 lb•in).

21. Connect the breather tube to the valve cover.
22. Connect the crankcase ventilation tube to the valve cover.
23. Install the timing belt. Refer to "Timing Belt" in this section.

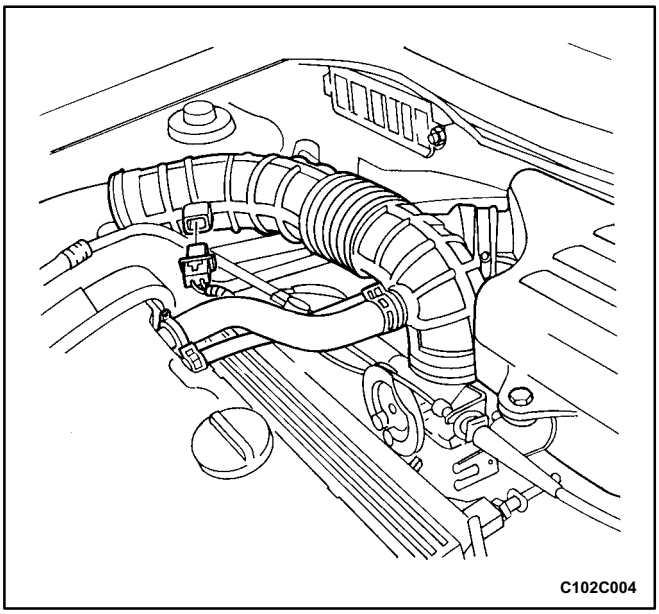

TIMING BELT CHECK AND ADJUST

(Left-Hand Drive Shown, Right-Hand Drive Similar)

Adjustment Procedure

1. Disconnect the negative battery cable.
2. Disconnect the manifold air temperature sensor con-nector.
3. Remove the air intake tube from the throttle body.
4. Remove the breather tube from the valve cover.

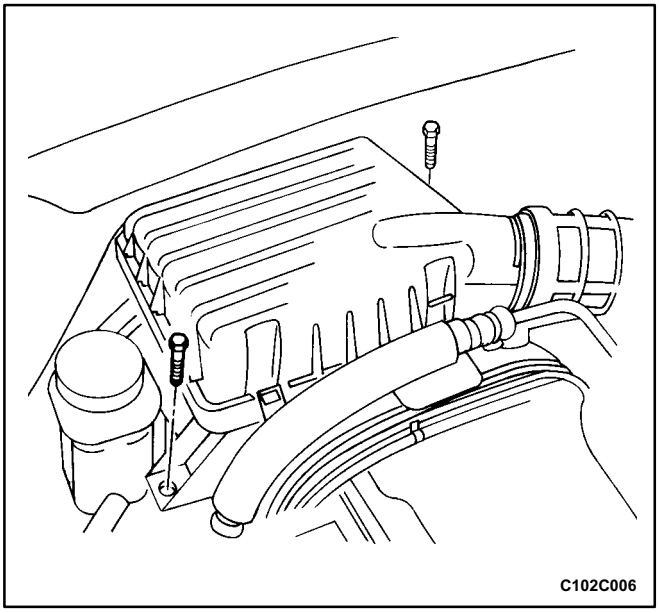

5. Remove the air filter housing bolts.
6. Remove the air filter housing.
7. Remove the right front wheel. Refer to *Section 2E, Tires and Wheels.*
8. Remove the right front wheel well splash shield. Refer to *Section 9R, Body Front End.*

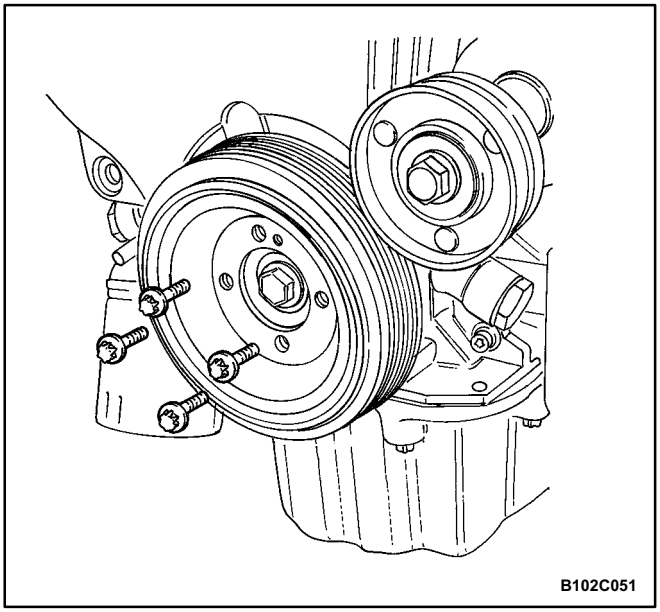

9. Remove the serpentine accessory drive belt. Refer to *Section 6B, Power Steering Pump.*
10. Remove the crankshaft pulley bolts.
11. Remove the crankshaft pulley.
12. Remove the right engine mount bracket. Refer to "Engine Mount" in this section.

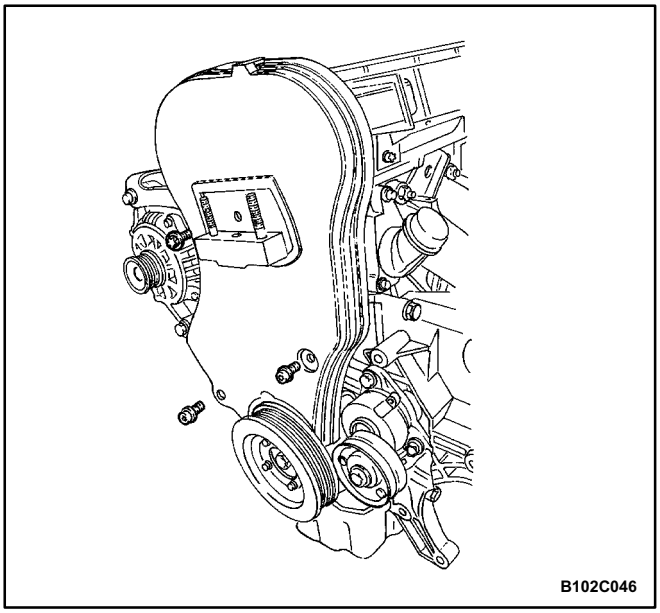

13. Remove the front timing belt cover bolts.
14. Remove the front timing belt cover.

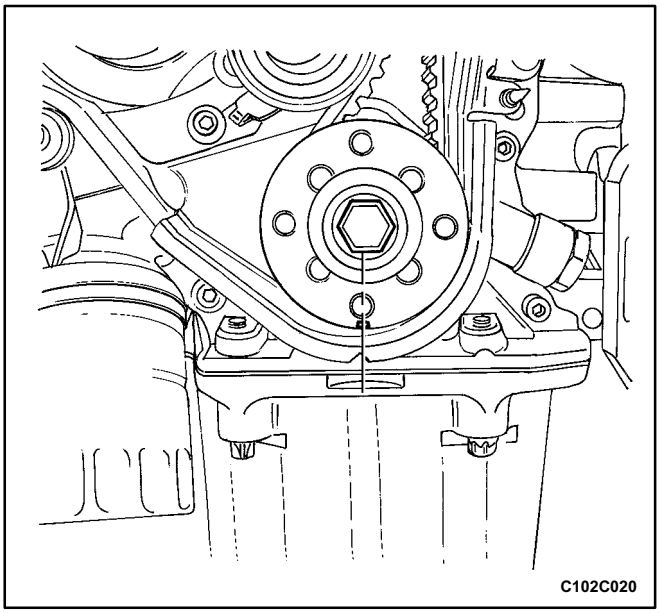

15. Rotate the crankshaft at least one full turn clockwise using the crankshaft gear bolt.
16. Align the mark on the crankshaft gear with the notch at the bottom of the rear timing belt cover.

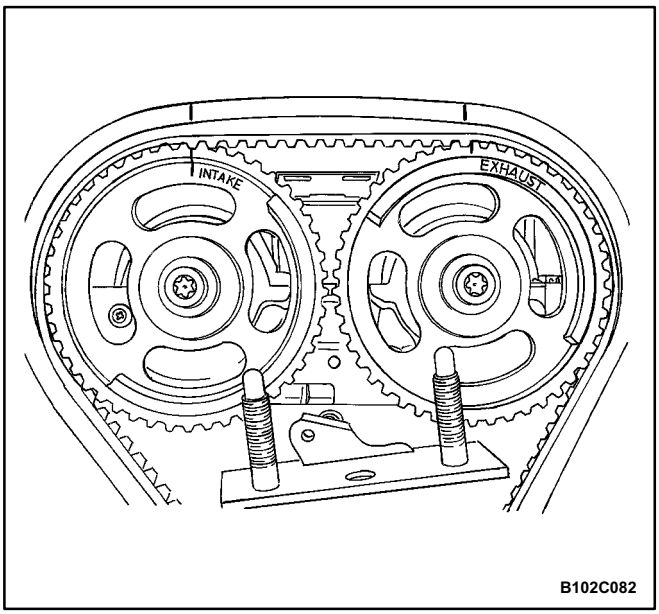

17. Align the camshaft gear timing marks. Use the ex-haust gear mark for the exhaust gear and the intake gear mark for the intake gear, since the gears are interchangeable.

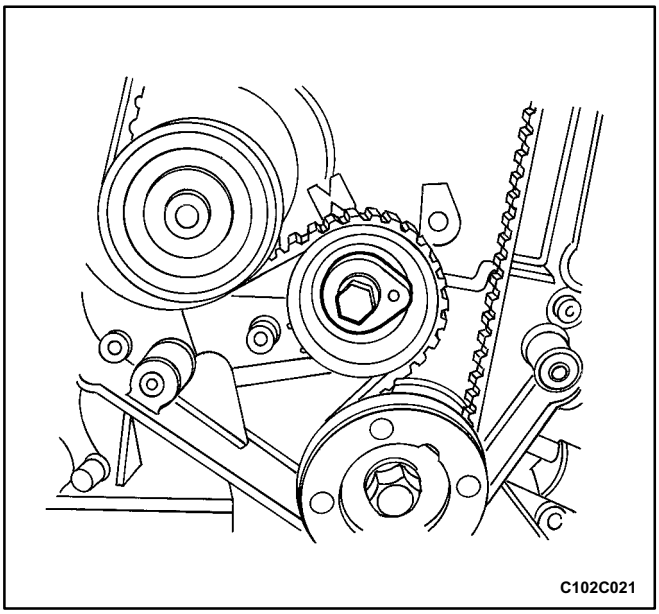

18. Loosen the automatic tensioner bolt. To tighten the belt tension, turn the hex-key tab counterclock-wise.
19. Rotate the automatic tensioner hex-key tab clock-wise until the adjust arm pointer of the timing belt automatic tensioner is aligned with the notch in the timing belt automatic tensioner bracket.

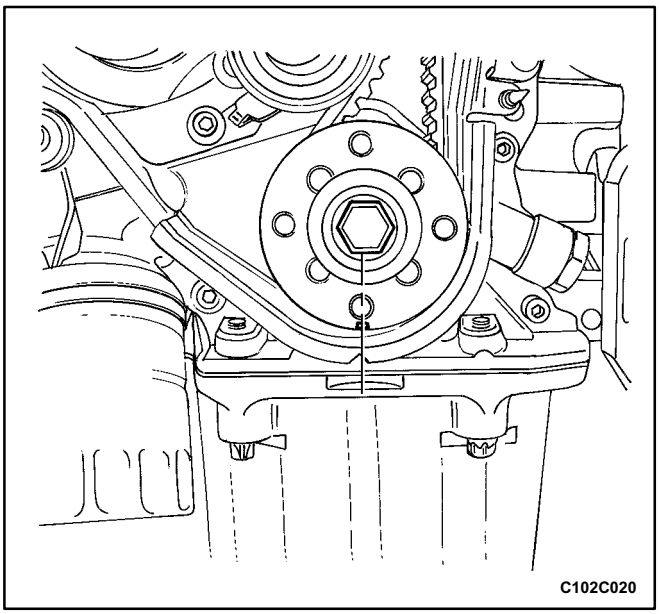

20. Tighten the automatic tensioner bolt.
21. Rotate the crankshaft two full turns clockwise using the crankshaft gear bolt.
22. Check the automatic tensioner pointer.

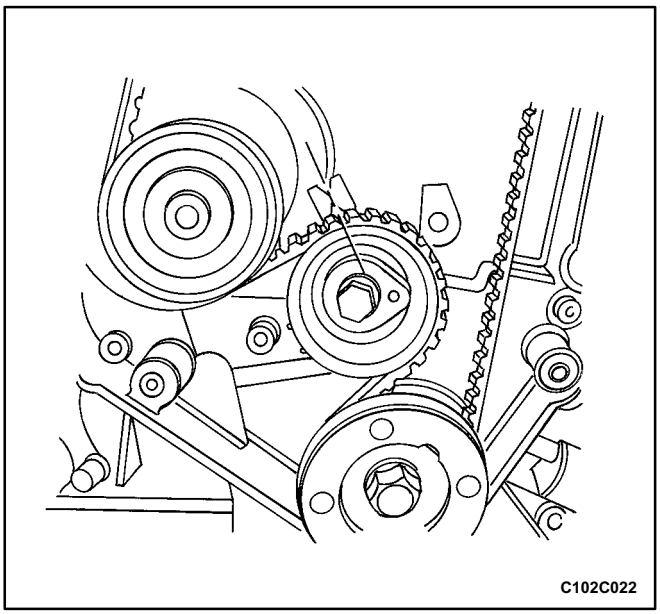

23. When the adjust arm pointer of the timing belt auto-matic tensioner is aligned with the notch on the tim-ing belt automatic tensioner bracket, the belt is tensioned correctly.

Tighten

Tighten the automatic tensioner bolt to 25 N•m (18 lb•ft).

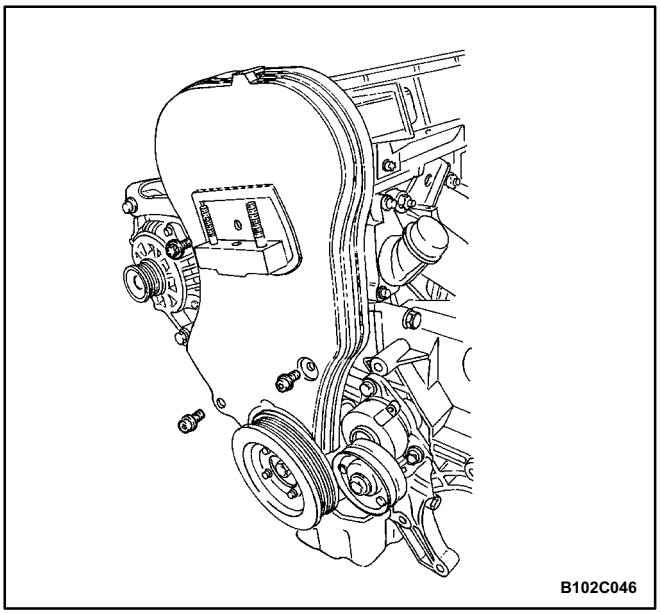

24. Install the front timing belt cover.
25. Install the front timing belt cover bolts.

Tighten

Tighten the front timing belt cover bolts to 6 N•m (53 lb•in).

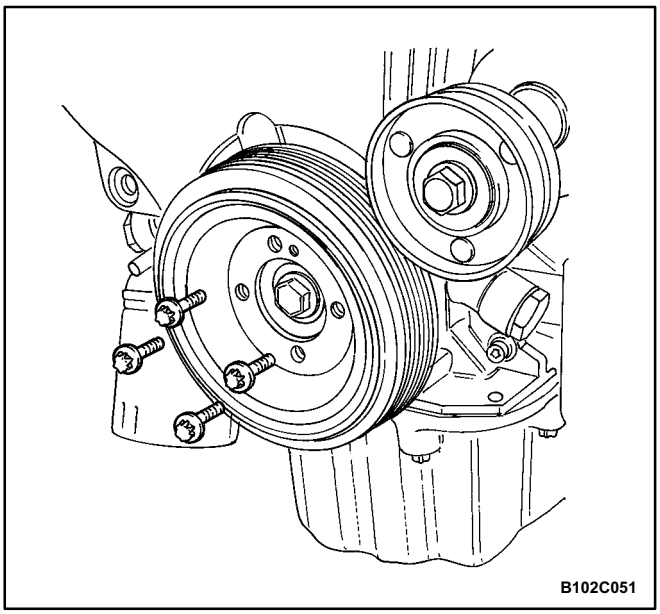

26. Install the crankshaft pulley.
27. Install the crankshaft pulley bolts.

Tighten

Tighten the crankshaft pulley bolts to 20 N•m (15 lb•ft).

28. Install the right engine mount bracket. Refer to En-gine Mount" in this section.
29. Install the serpentine accessory drive belt. Refer to *Section 6B, Power Steering Pump.*

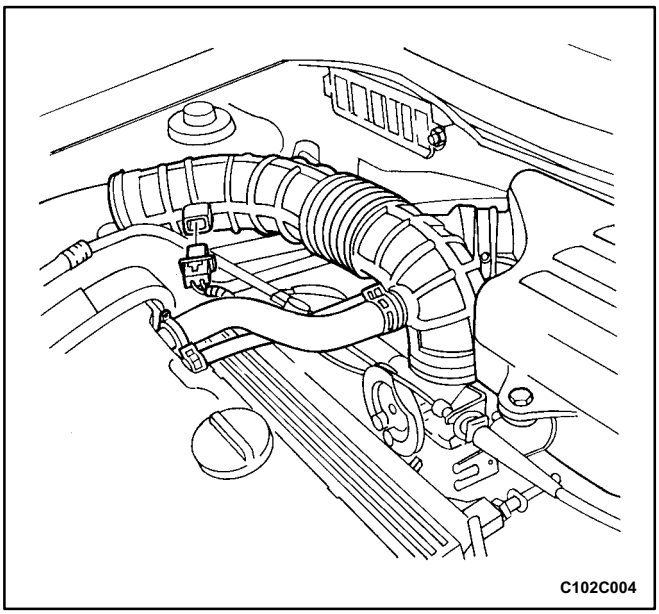

30. Install the right front wheel well splash shield. Refer to *Section 9R, Body Front End.*
31. Install the right front wheel. Refer to *Section 2E, Tires and Wheels*.
32. Install the air filter housing.
33. Install the air filter housing bolts.

Tighten

Tighten the air filter housing bolts to 8 N•m (71 lb•in).

34. Connect the air intake tube to the throttle body.
35. Connect the breather tube to the valve cover.
36. Connect the manifold air temperature sensor con-nector.
37. Connect the negative battery cable.

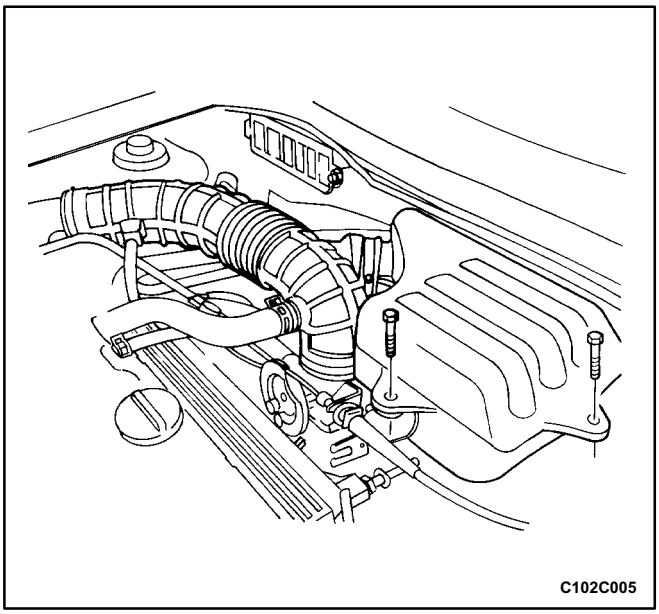

TIMING BELT

(Left-Hand Drive Shown, Right-Hand Drive Similar)

Removal Procedure

1. Disconnect the negative battery cable.
2. Disconnect the manifold air temperature (MAT) sen-sor connector.
3. Disconnect the air intake tube from the throttle body.
4. Remove the resonator retaining bolts and the reso-nator from the throttle body.
5. Disconnect the breather tube from the valve cover.

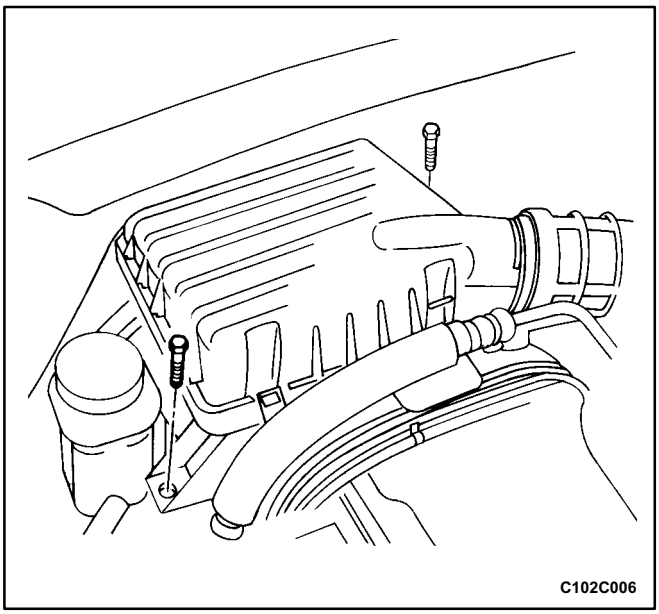

6. Remove the air filter housing bolts.
7. Remove the air filter housing.
8. Remove the right front wheel. Refer to *Section 2E, Tires and Wheels*.
9. Remove the right front wheel well splash shield. Refer to *Section 9R, Body Front End.*

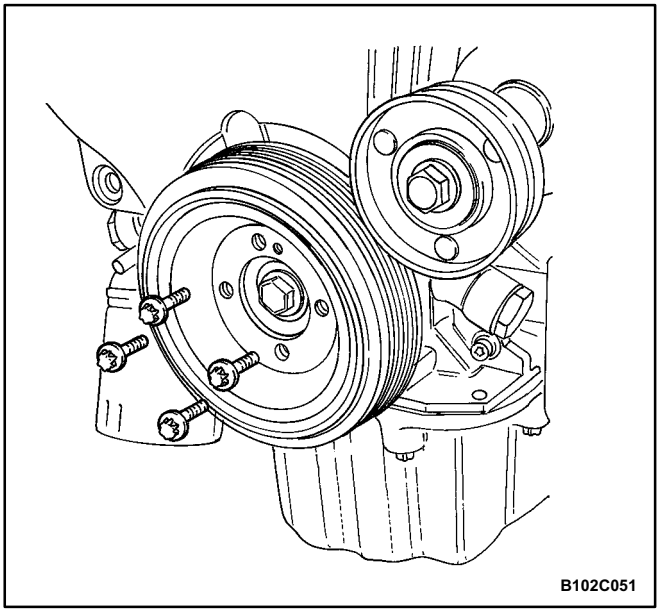

10. Remove the serpentine accessory drive belt. Refer to *Section 6B, Power Steering Pump*.
11. Remove the crankshaft pulley bolts.
12. Remove the crankshaft pulley.
13. Remove the right engine mount bracket. Refer to "Engine Mount" in this section.

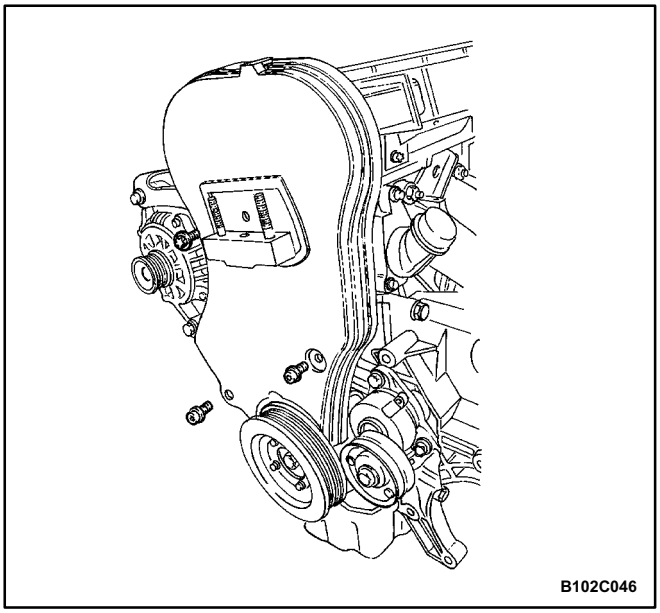

14. Remove the power steering hose clamp bolt, and position the hose clear of the repair area.
15. Remove the front timing belt cover bolts.
16. Remove the front timing belt cover.

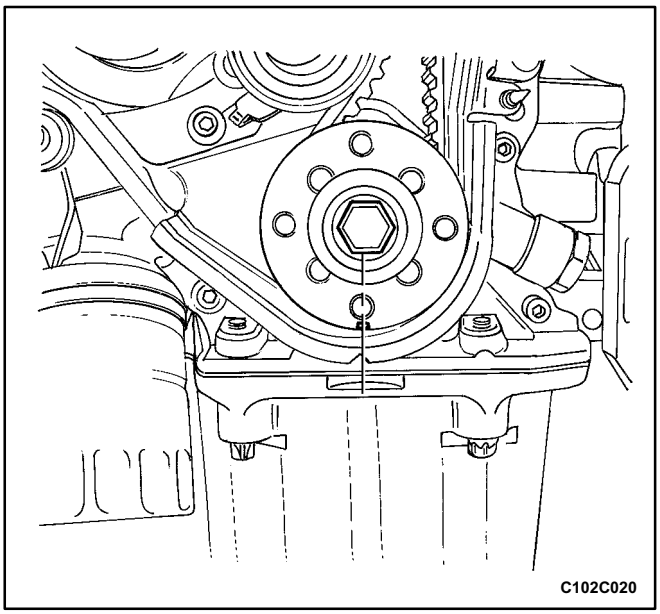

17. Using the crankshaft gear bolt, rotate the crankshaft clockwise until the timing mark on the crankshaft gear is aligned with the notch at the bottom of the rear timing belt cover.

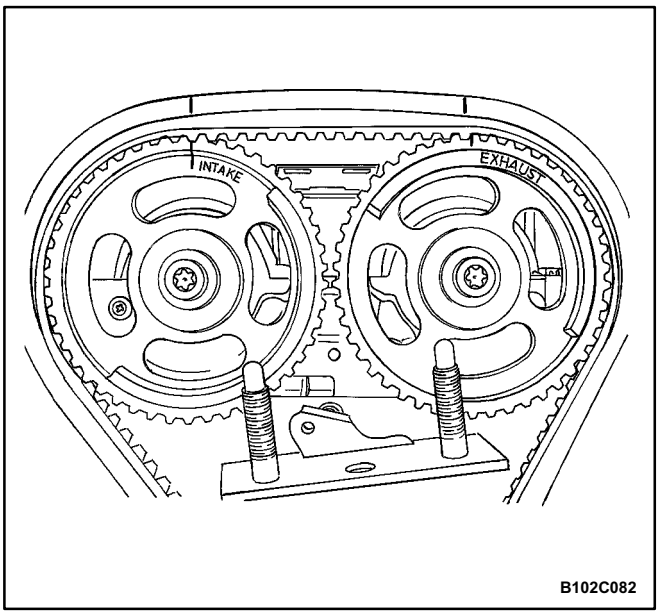

Notice: The camshaft gears must align with the notch on the valve cover or damage to the engine could result.

18. Align the camshaft gears with the notch on the valve cover.

Important: Use the intake gear mark for the intake camshaft gear and the exhaust gear mark for the ex-haust camshaft gear since both gears are interchange-able.

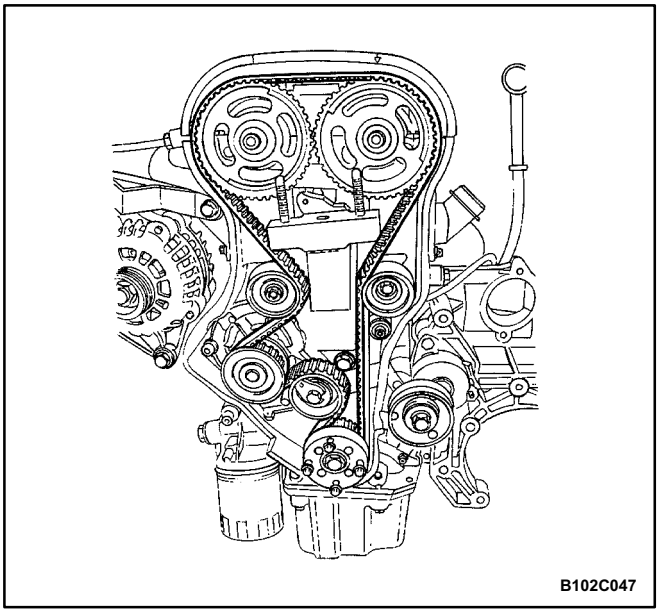

19. Loosen the automatic tensioner bolt. Turn the hex-key tab to relieve belt tension.
20. Remove the timing belt.

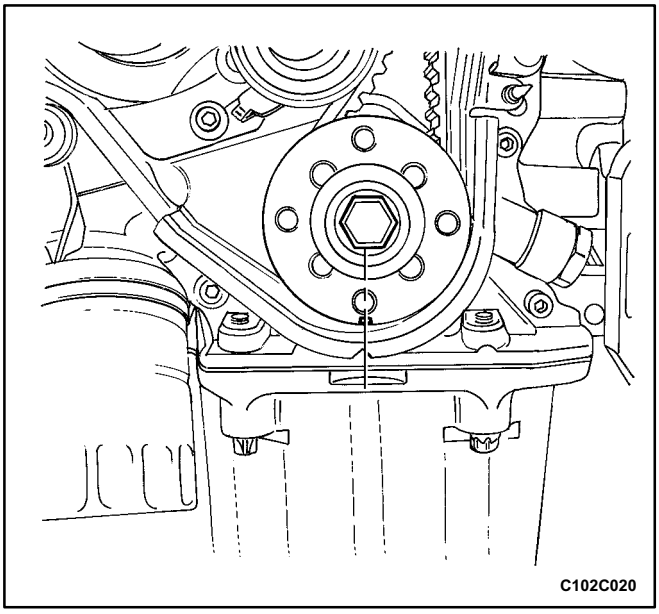

Installation Procedure

1. Align the timing mark on the crankshaft gear with the notch on the bottom of the rear timing belt cover.

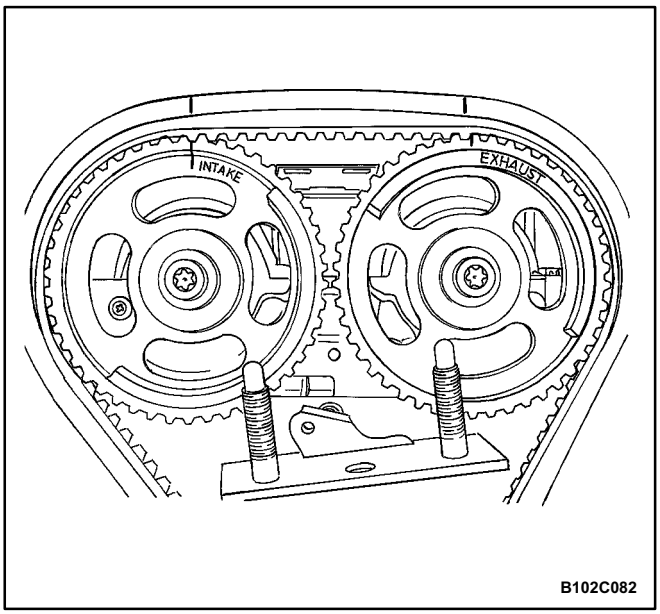

2. Align the timing marks on the camshaft gears, using the intake gear mark for the intake gear and the ex-haust gear mark for the exhaust gear.

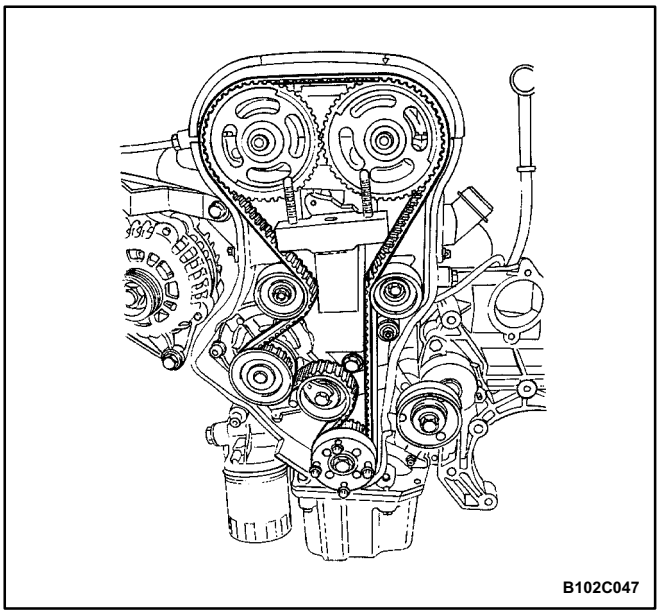

3. Install the timing belt.

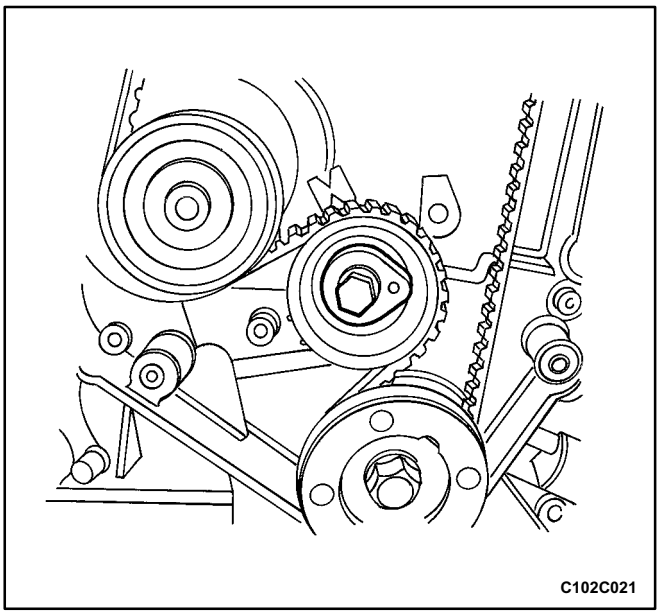

4. Turn the hex-key tab in a counterclockwise direction to tension the belt. Turn until the pointer aligns with the notch.
5. Install the automatic tensioner bolt.

   Tighten

   Tighten the automatic tensioner bolt to 25 N•m (18 lb•ft).
6. Rotate the crankshaft two full turns clockwise using the crankshaft gear bolt.
7. Recheck the automatic tensioner pointer.

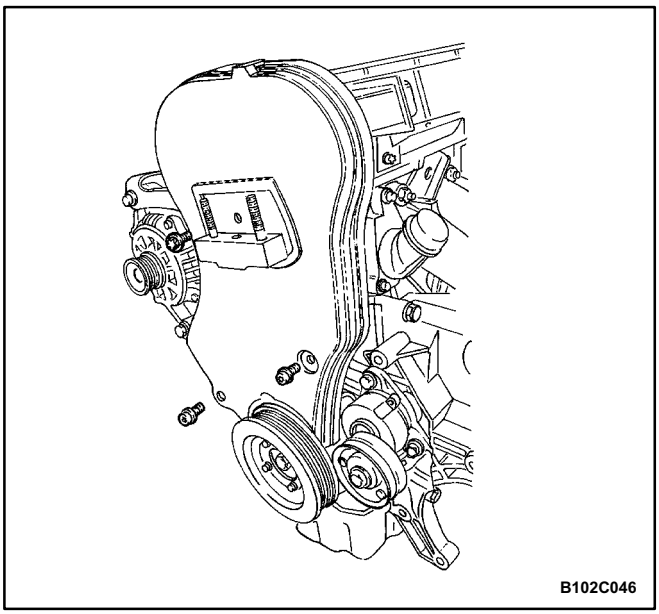

8. Install the front timing belt cover.
9. Install the front timing belt cover bolts.

Tighten

Tighten the front timing belt cover bolts to 6 N•m (53 lb•in).

10. Install the right engine mount bracket. Refer to "En-gine Mounts" in this section.
11. Position the power steering hose in place and install the clamp bolt.

Tighten

Tighten the power steering hose clamp bolt to 8 N•m (71 lb•in).

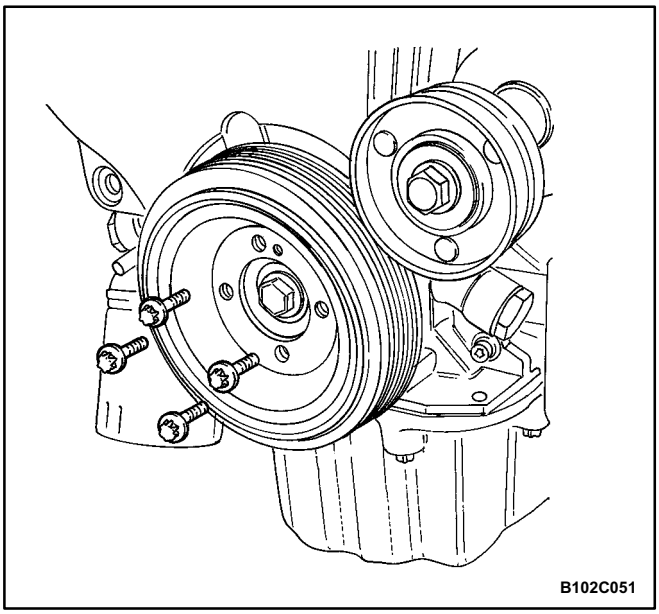

12. Install the crankshaft pulley.
13. Install the crankshaft pulley bolts.

Tighten

Tighten the crankshaft pulley bolts to 20 N•m (15 lb•ft).

14. Install the serpentine accessory drive belt. Refer to *Section 6B, Power Steering Pump.*
15. Install the right front wheel well splash shield. Refer to *Section 9R, Body Front End.*
16. Install the right front wheel. Refer to *Section 2E, Tires and Wheels.*
17. Install the air filter housing.
18. Install the air filter housing bolts.

Tighten

Tighten the air filter housing bolts to 8 N•m (71 lb•in).

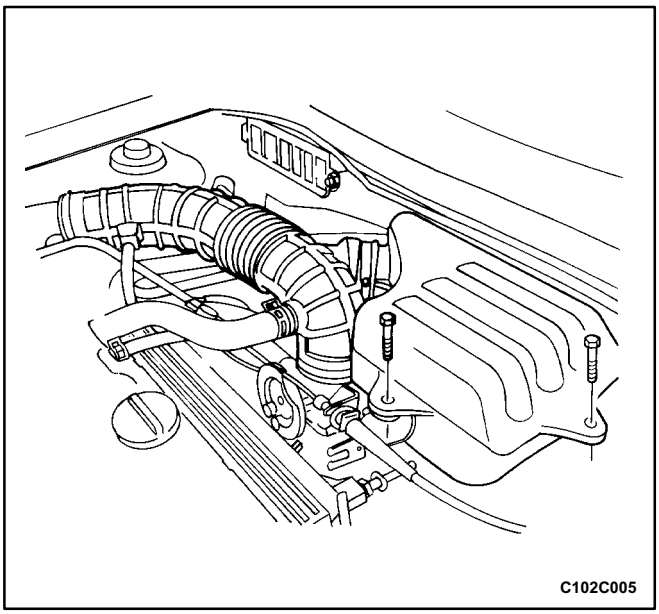

19. Install the resonator and the retaining bolts.

Tighten

Tighten the resonator retaining bolts to 8 N•m (71 lb•in).

20. Connect the air intake tube to the throttle body.
21. Connect the breather tube to the valve cover.
22. Connect the manifold air temperature sensor con-nector.
23. Connect the negative battery cable.

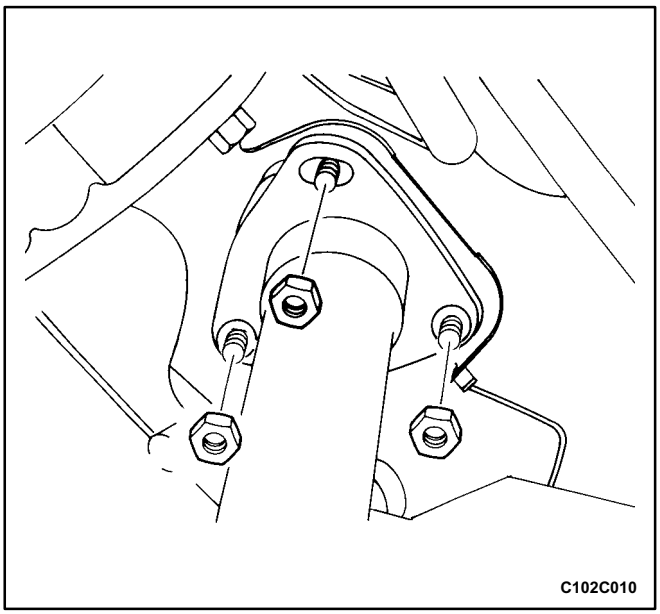

OIL PAN

Removal Procedure

1. Disconnect the negative battery cable.

(2.0L DOHC)

2. Remove the exhaust flex pipe retaining nuts from the exhaust manifold and the support bracket.
3. Remove the exhaust flex pipe retaining nuts from the catalytic converter.
4. Remove the exhaust flex pipe.

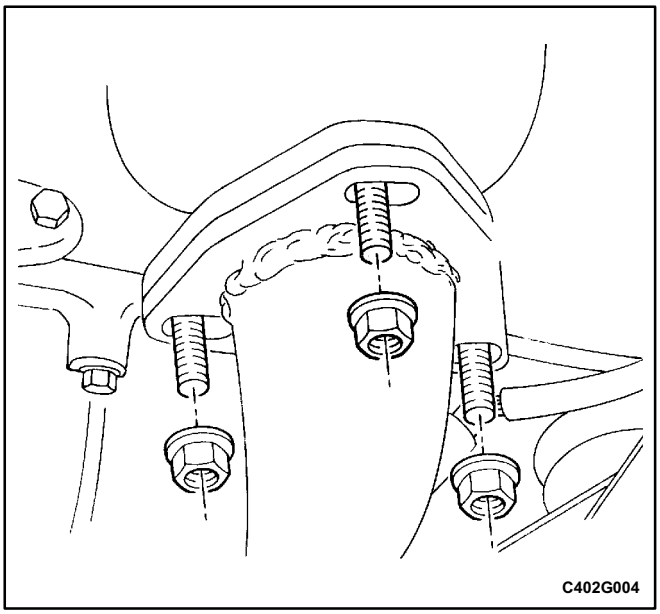

(2.2L DOHC)

5. Disconnect the post-converter heated oxygen sen-sor connector.
6. Remove the auxiliary catalytic converter lower flange nuts.

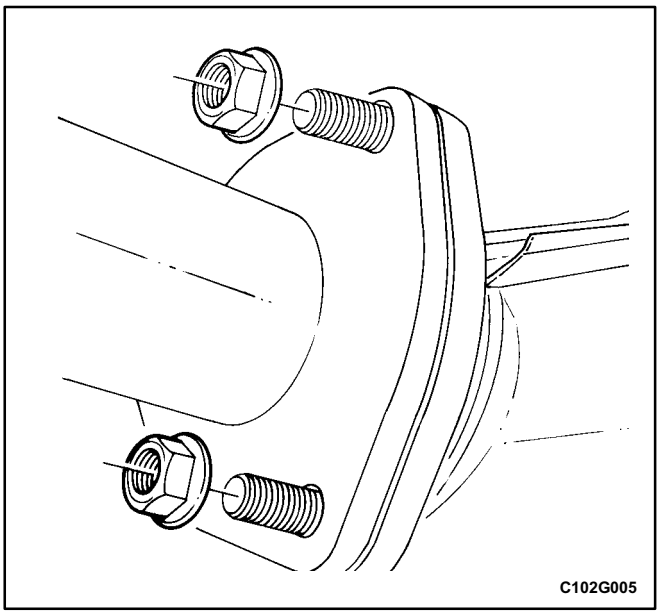

7. Remove the nuts that secure the front muffler pipe to the main catalytic converter.
8. Remove the rubber hangers that attach the connect-ing pipe to the vehicle.

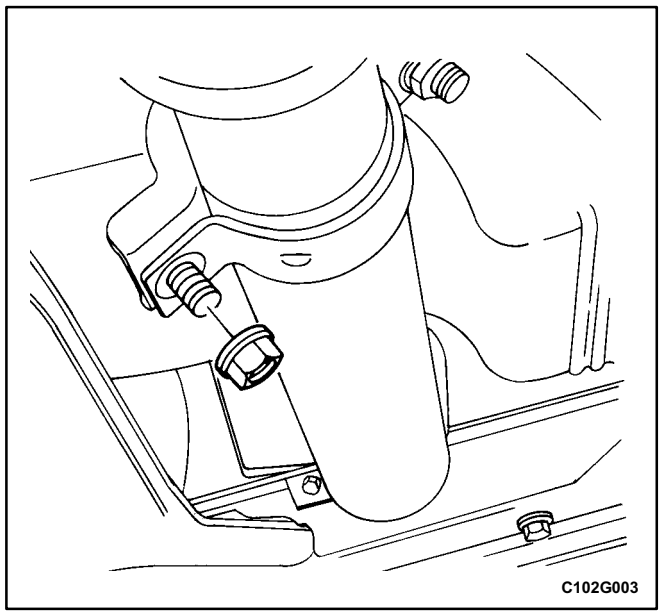

9. Remove the connecting pipe mounting bracket nuts and the bracket.
10. Remove the main catalytic converter and the con-necting pipe.

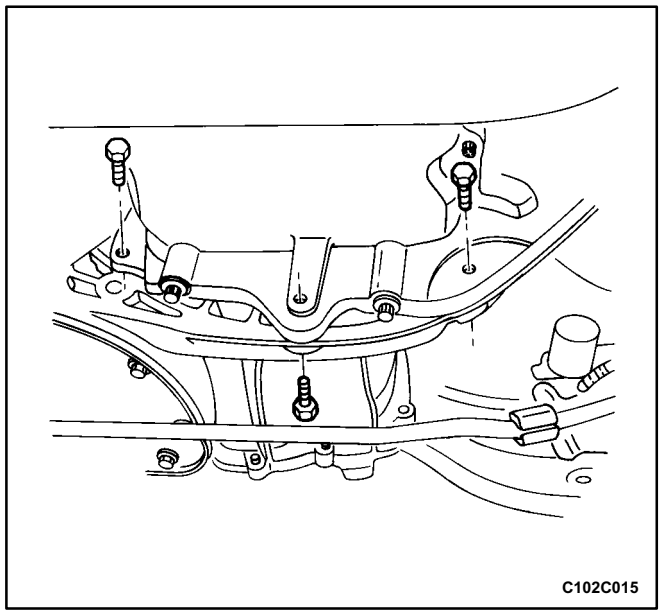

11. Drain the engine oil from the engine crankcase.
12. Remove the oil pan flange-to-transaxle retaining bolts.

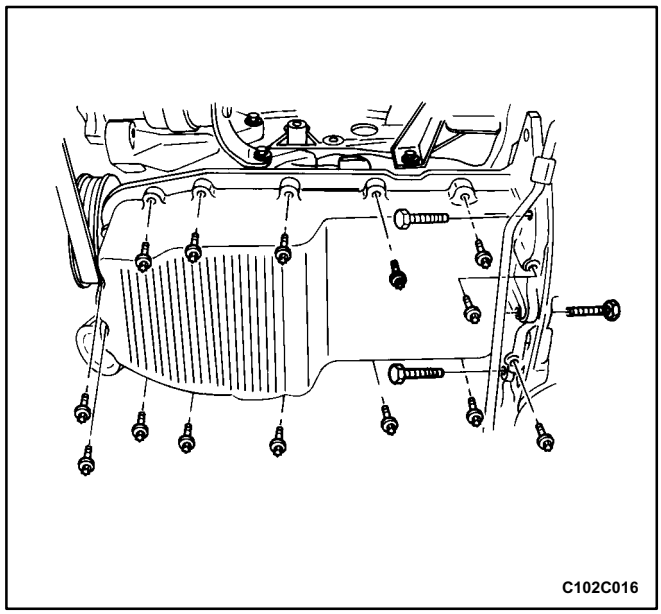

13. Remove the oil pan retaining bolts.
14. Remove the oil pan from the engine block.
15. Remove the oil pan gasket from the oil pan.

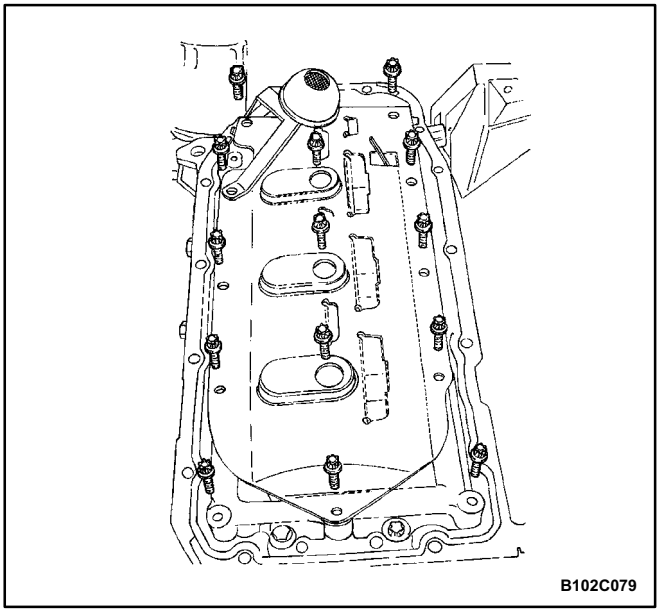

Cleaning Procedure

1. Clean the oil pan sealing surface.
2. Clean the engine block sealing surface.
3. Clean the oil pan retaining bolts.
4. Clean the oil pan attaching bolt holes in the engine block.
5. Clean the oil pan splash shield.

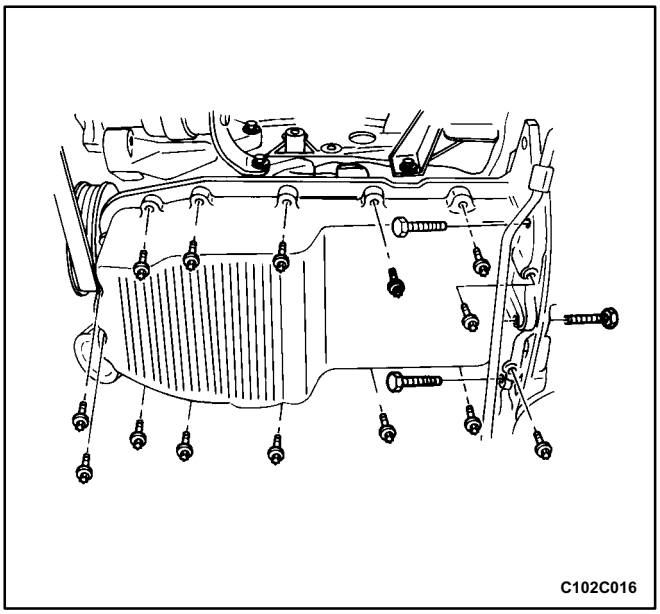

Installation Procedure

1. Coat the new oil pan gasket with sealant.
2. Install the oil pan gasket to the oil pan.
3. Install the oil pan to the engine block.
4. Install the oil pan retaining bolts.

Tighten

Tighten the oil pan retaining bolts to 10 N•m (89 lb•in).

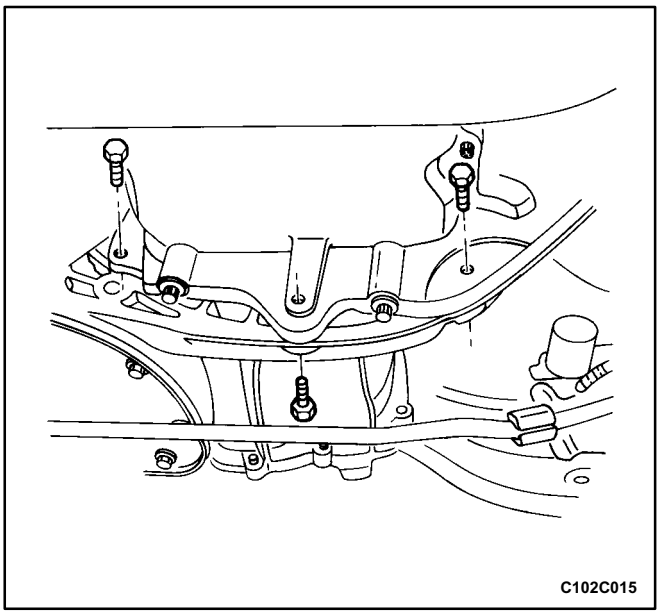

5. Install the oil pan flange-to-transaxle retaining bolts.

Tighten

Tighten the oil pan flange-to-transaxle retaining bolts to 40 N•m (30 lb•ft).

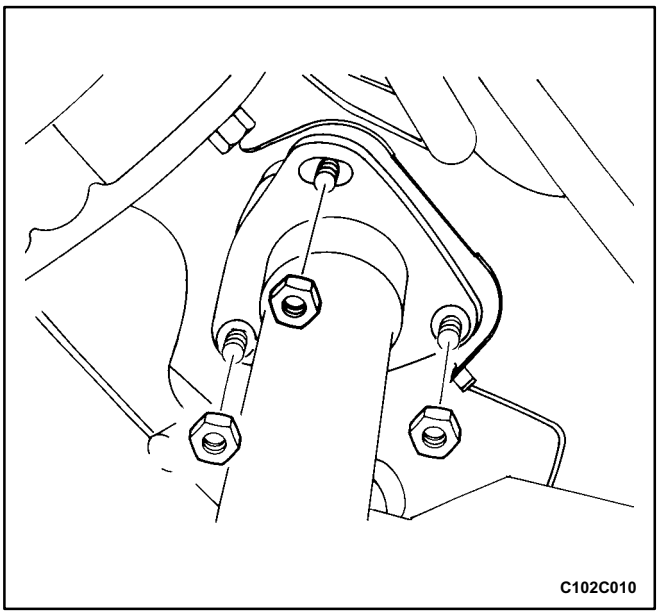

(2.0L DOHC)

6. Install the exhaust flex pipe.
7. Install the exhaust flex pipe retaining nuts to the ex-haust manifold and the support bracket.

Tighten

Tighten the exhaust flex pipe retaining nuts to the exhaust manifold to 22 N•m (16 lb•ft).

Tighten the exhaust pipe support bracket bolts to 30 N•m (22 lb•ft).

8. Install the exhaust flex pipe retaining nuts to the catalytic converter.

Tighten

Tighten the exhaust flex pipe retaining nuts to the catalytic converter to 30 N•m (22 lb•ft).

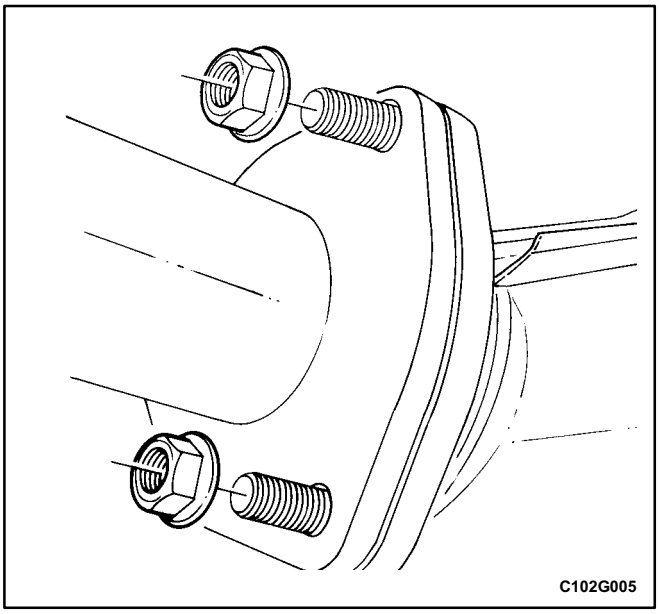

(2.2L DOHC)

9. Insert the main catalytic converter bolts into the front muffler flange.
10. Install the rubber hangers that attach the connecting pipe to the vehicle.
11. Install the nuts to secure the front muffler pipe to the main catalytic converter.

Tighten

Tighten the front muffler pipe-to-main catalytic con-verter nuts to 30 N•m (22 lb•ft).

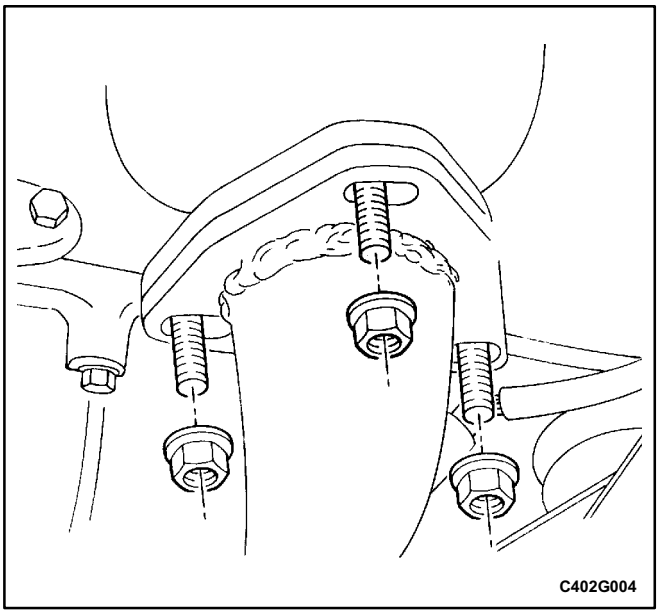

12. Install the auxiliary catalytic converter lower flange bolts.

Tighten

Tighten the auxiliary catalytic converter-to-connec-ting pipe nuts to 40 N•m (30 lb•ft).

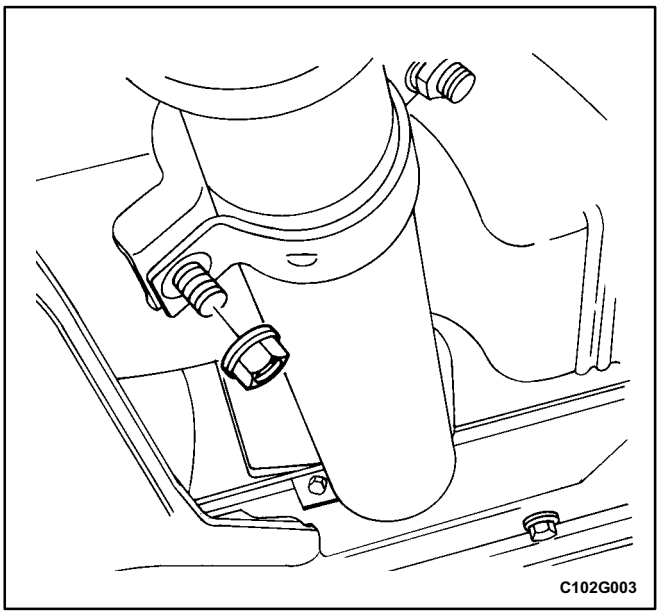

13. Install the connecting pipe mounting bracket and nuts.

Tighten

Tighten the connecting pipe mounting bracket nuts to 30 N•m (22 lb•ft).

14. Connect the postconverter heated oxygen sensor connector.
15. Connect the negative battery cable.
16. Refill the engine crankcase with engine oil.
17. Connect the negative battery cable.
18. Refill the engine crankcase with engine oil.

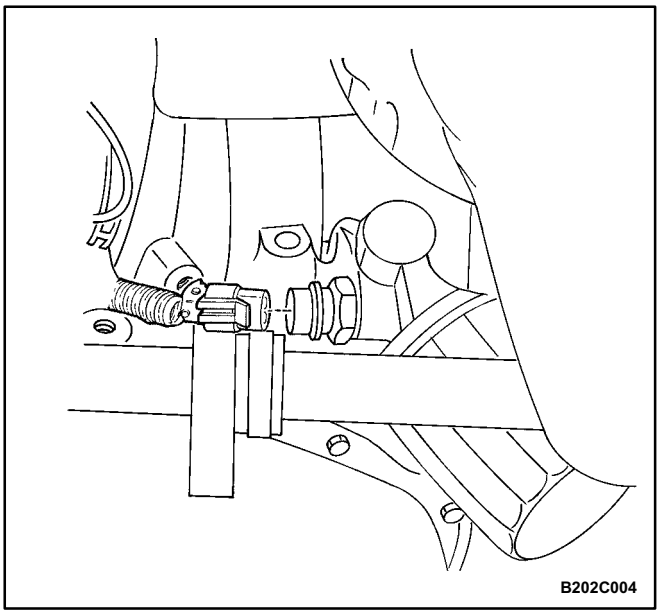

OIL PUMP

Tools Required

KM-498-B Pressure Gauge

KM-135 Adapter

Engine Oil Pressure Inspection Procedure

1. Remove the right front wheel well splash shield. Refer to *Section 9R, Body Front End*.
2. Remove the oil pressure switch connector.

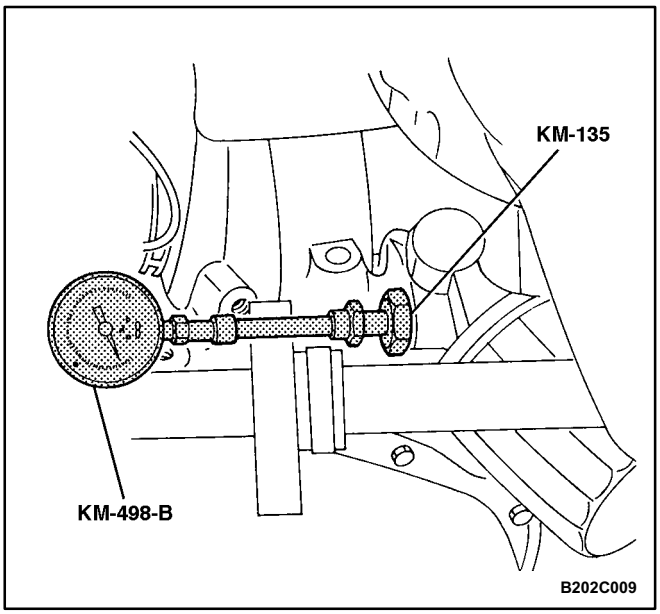

3. Install the adapter KM-135 in place of the oil pres-sure switch.
4. Connect the pressure gauge KM-498-B to the adapter.
5. Start the engine and check the oil pressure at idle speed and engine temperature of 80°C (176°F). The minimum oil pressure should be 30 kPa (0.3 bar).
6. Stop the engine and remove the oil pressure gauge KM-498-B and the adapter KM-135.
7. Install the oil pressure switch.

Tighten

Tighten the oil pressure switch to 40 N•m (30 lb•ft).

8. Connect the electrical connector to the oil pressure switch.
9. Install the right front wheel well splash shield. Refer to *Section 9R, Body Front End*.
10. Check the oil level and fill to the full mark.

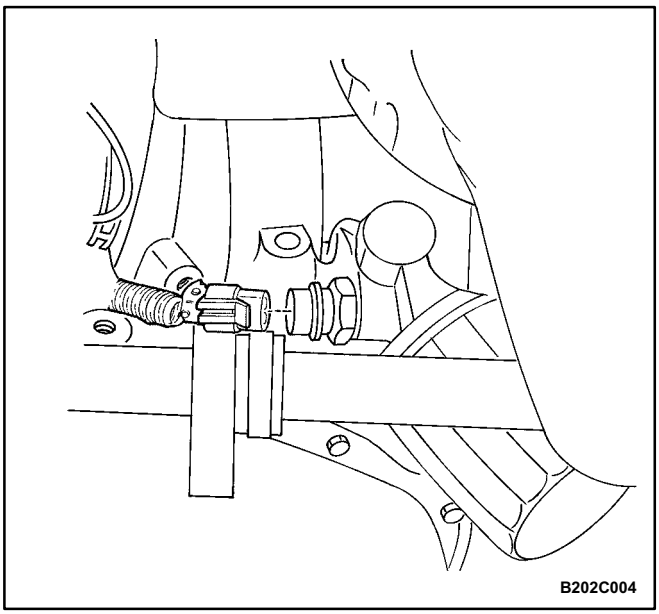

Removal Procedure

1. Disconnect the negative battery cable.
2. Remove the timing belt. Refer to "Timing Belt" in this section.
3. Remove the rear timing belt cover. Refer to "Rear Timing Belt Cover" in this section.
4. Disconnect the oil pressure switch connector.

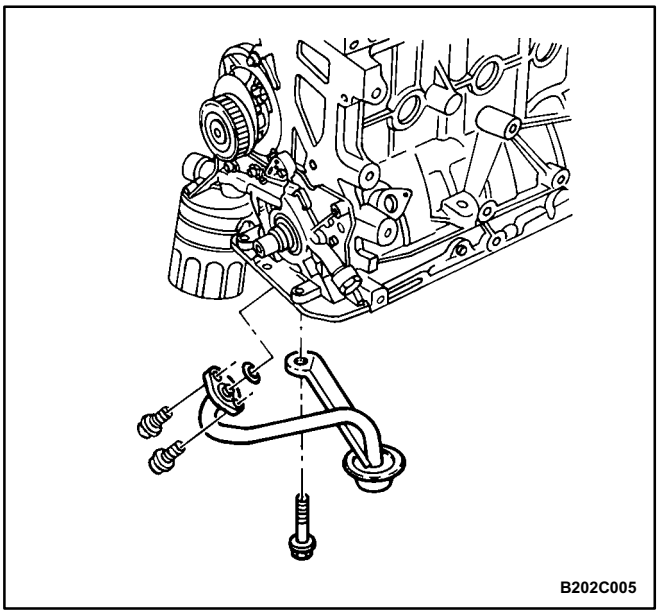

5. Remove the oil pan. Refer to "Oil Pan" in this sec-tion.
6. Remove the oil pump pickup tube and support bracket bolts.
7. Remove the oil pump pickup tube.

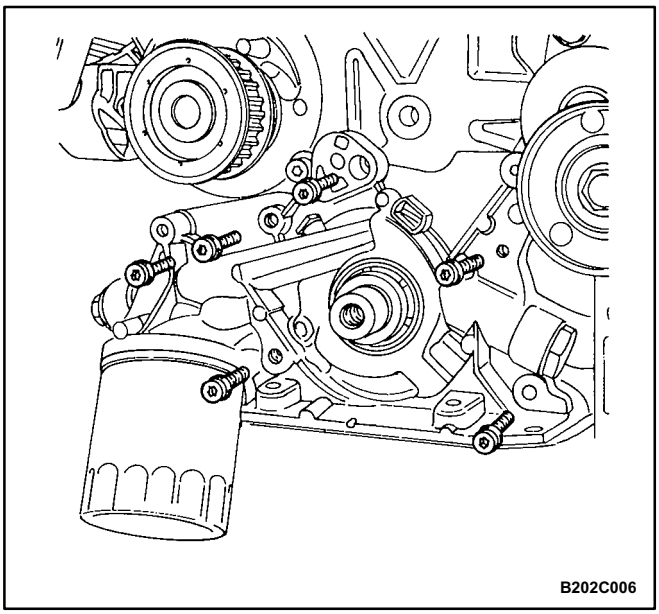

8. Remove the oil pump retaining bolts.
9. Carefully separate the oil pump and the gasket from the engine block.
10. Remove the oil pump.

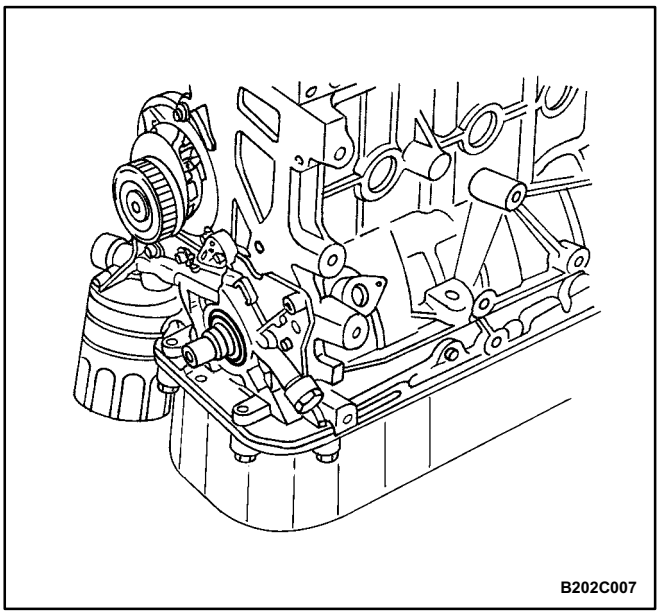

Inspection Procedure

1. Clean the oil pump and engine block gasket mating surface areas.
2. Remove the safety relief valve bolt.
3. Remove the safety relief valve and spring.
4. Remove the oil pump-to-crankshaft seal.

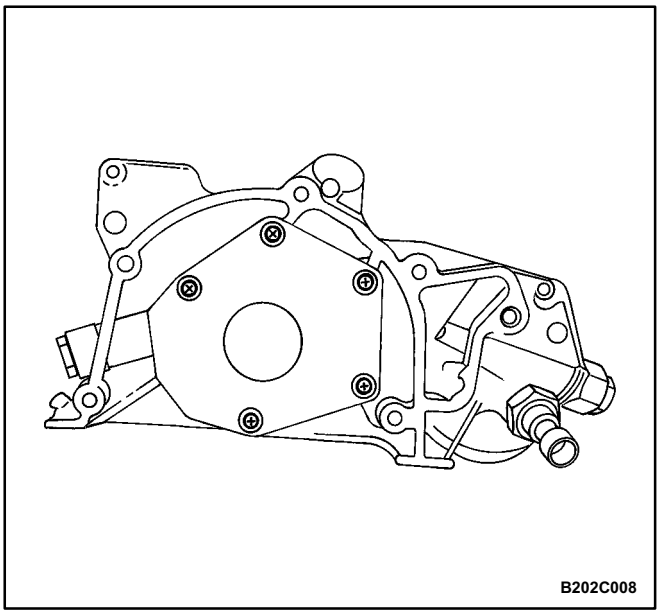

5. Remove the oil pump rear cover bolts.
6. Remove the rear cover.

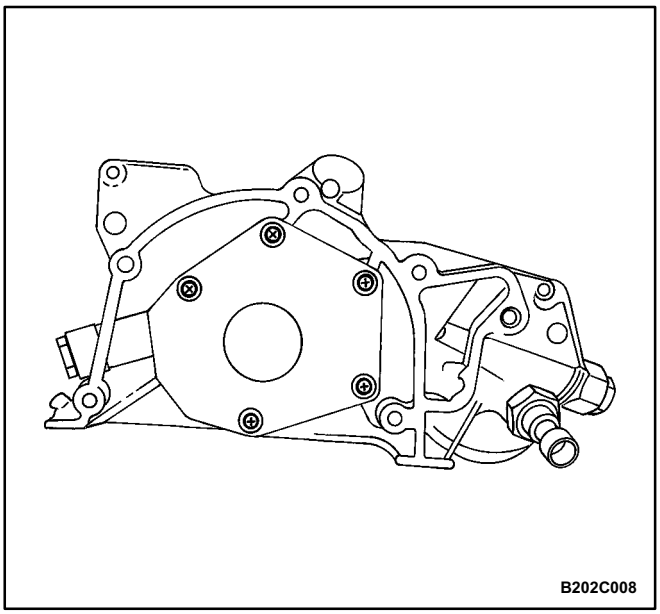

7. Clean the oil pump housing and all of the parts.
8. Inspect all parts for signs of wear. Refer to "Engine Specifications" in this section.
9. Coat all oil pump parts with clean engine oil and install.

Notice: Pack the oil pump gear cavity with petroleum jelly to ensure an oil pump prime, or engine damage could result.

10. Apply Loctite® 242 to the rear cover bolts, and install the cover and the bolts.

    Tighten

    Tighten the rear cover bolts to 6 N•m (53 lb•in).

11. Install the safety relief valve, the spring, the washer, and the bolt.

    Tighten

    Tighten the safety relief valve bolt to 30 N•m (22 lb•ft).

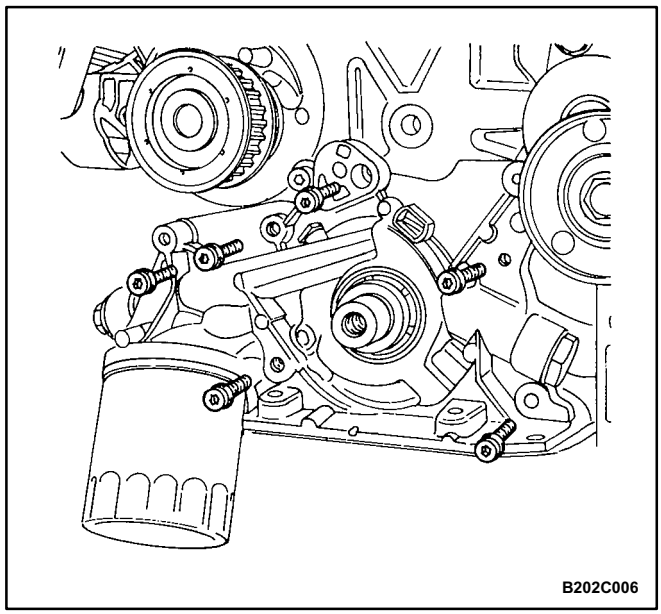

Installation Procedure

1. Apply Loctite® 242 to the oil pump bolts and RTV sealant to the new oil pump gasket.
2. Install the gasket to the oil pump, and install the oil pump to the engine block with the bolts.

Tighten

Tighten the oil pump bolts to 10 N•m (89 lb•in).

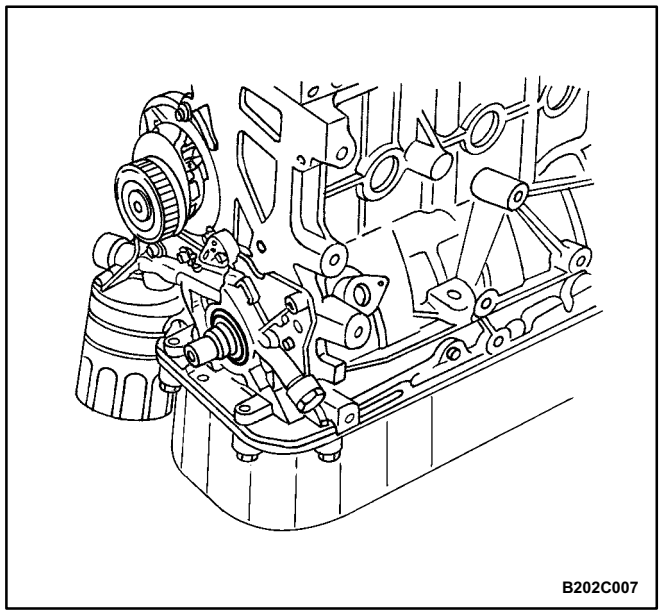

3. Install a new oil pump-to-crankshaft shaft seal. Coat the lip of the seal with a thin coat of grease.

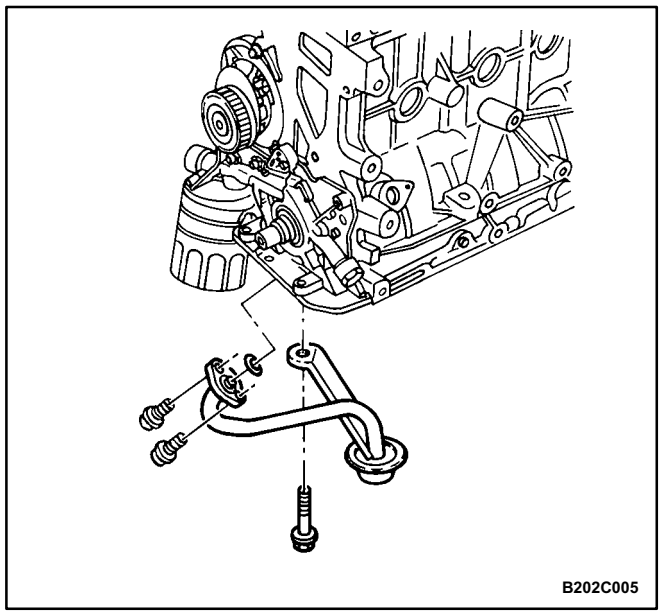

4. Coat the threads of the oil pump pickup tube and support bracket bolts with Loctite® 242.
5. Install the oil pump pickup tube and the bolts.

Tighten

Tighten the oil pump pickup tube bolt to 8 N•m (71 lb•in) and oil pump pickup tube support bracket bolts to 10 N•m (89 lb•in).

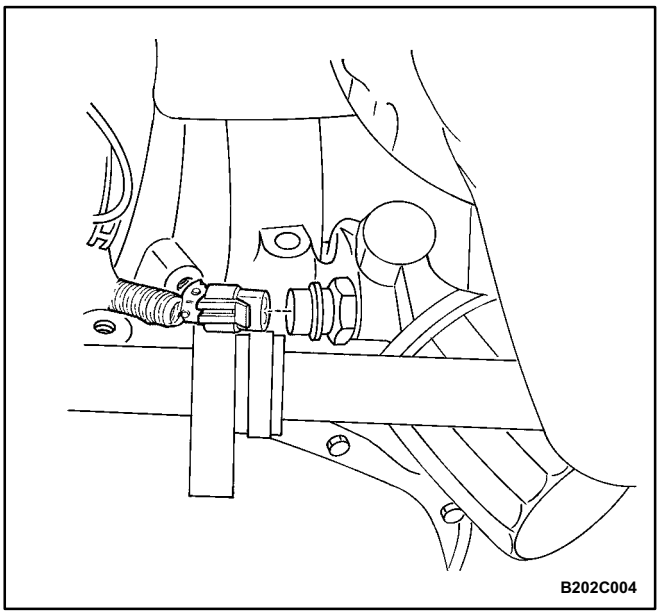

6. Install the oil pan. Refer to "Oil Pan" in this section.
7. Connect the oil pressure switch connector.
8. Install the rear timing belt cover. Refer to "Rear Timing Belt Cover" in this section.
9. Install the timing belt. Refer to "Timing Belt" In this section.
10. Connect the negative battery cable.

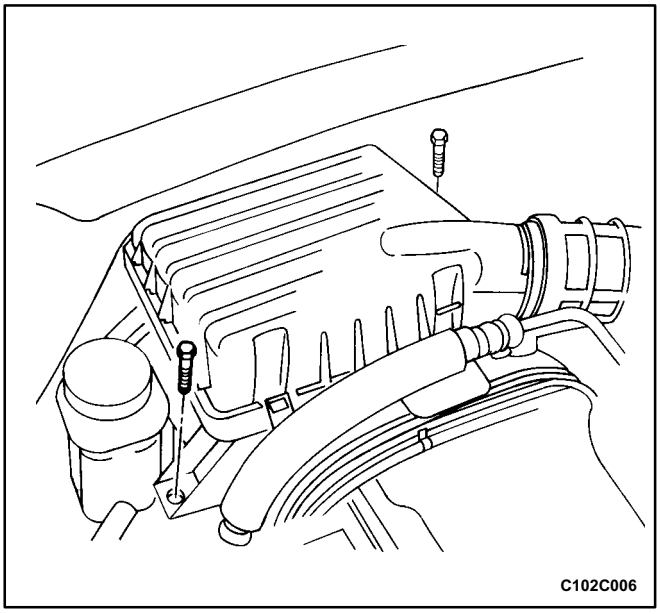

ENGINE MOUNT, RIGHT SIDE

Tools Required

J28467B Engine Assembly Lift Support

Removal Procedure

1. Disconnect the negative battery cable.
2. Support the engine assembly using the engine as-sembly lift support J28467B.
3. Remove the right front wheel well splash shield. Refer to *Section 9R, Body Front End.*
4. Remove the air filter housing assembly bolts.
5. Remove the air filter housing assembly.

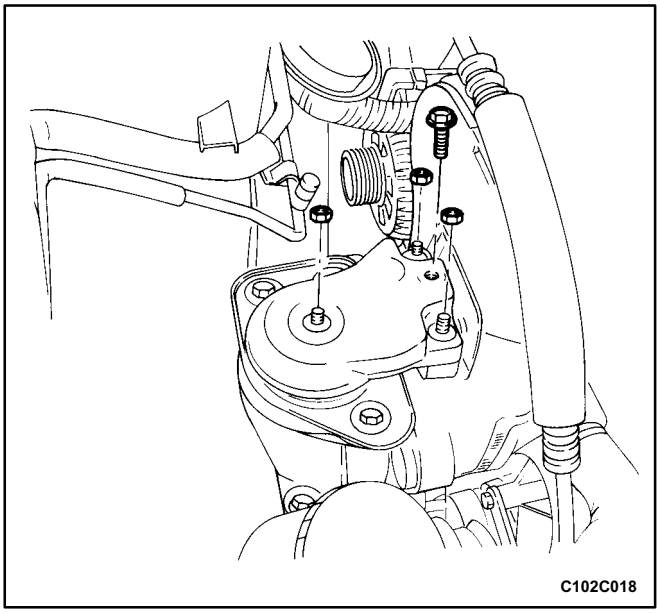

6. Remove the engine mount bracket retaining bolts.
7. Remove the engine mount bracket.
8. Remove the serpentine accessory drive belt. Refer to *Section 6B, Power Steering Pump*.

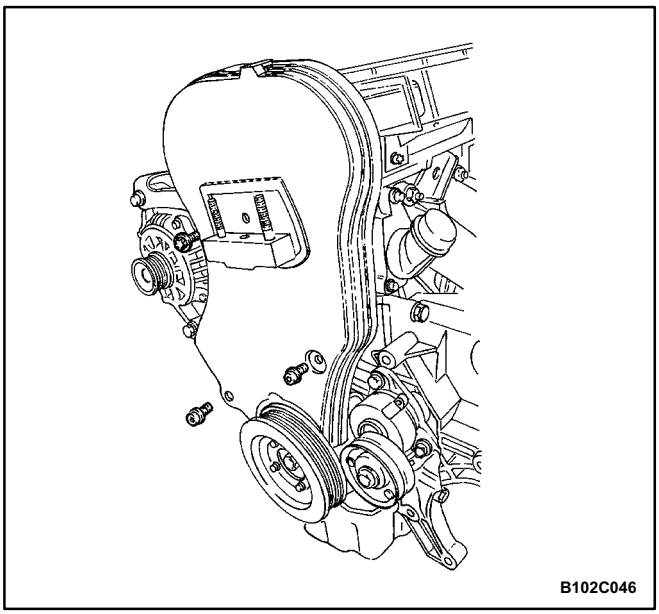

9. Remove the front timing belt cover bolts and the front timing belt cover.
10. Align the crankshaft pulley timing mark with the pointer, and the camshaft gears with the timing marks on the rear cover, by turning the crankshaft gear bolt.
11. Loosen the timing belt automatic tensioner bolt.
12. Turn the hex-key tab to relieve belt tension.
13. Remove the timing belt idler pulley nuts.
14. Remove the timing belt idler pulley.
15. Remove the engine mount retaining bolts.
16. Remove the engine mount.

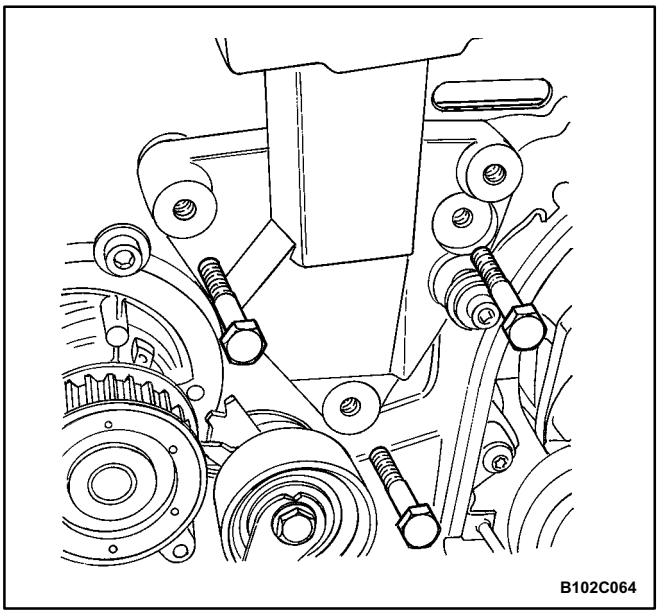

Installation Procedure

1. Install the engine mount.
2. Install the engine mount retaining bolts.

Tighten

Tighten the engine mount retaining bolts to 60 N•m (44 lb•ft).

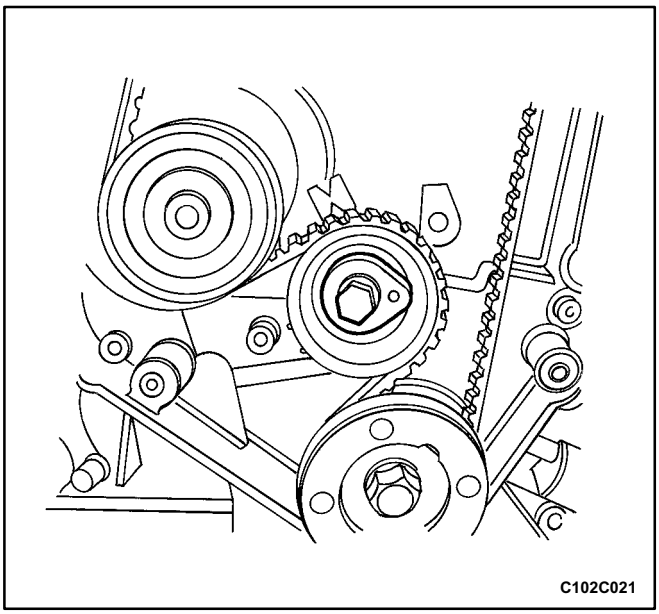

3. Install the timing belt idler pulleys.
4. Install the timing belt idler pulley nuts.

Tighten

Tighten the timing belt idler pulley nuts to 25 N•m (18 lb•ft).

5. Tension the timing belt by turning the timing belt auto-matic tensioner hex-key tab counterclockwise until the pointer is aligned to the indicator.

Tighten

Tighten the timing belt automatic tensioner bolt to 25 N•m (18 lb•ft).

6. Install the front timing belt cover.
7. Install the front timing belt cover bolts.

Tighten

Tighten the front timing belt cover bolts to 6 N•m (53 lb•in).

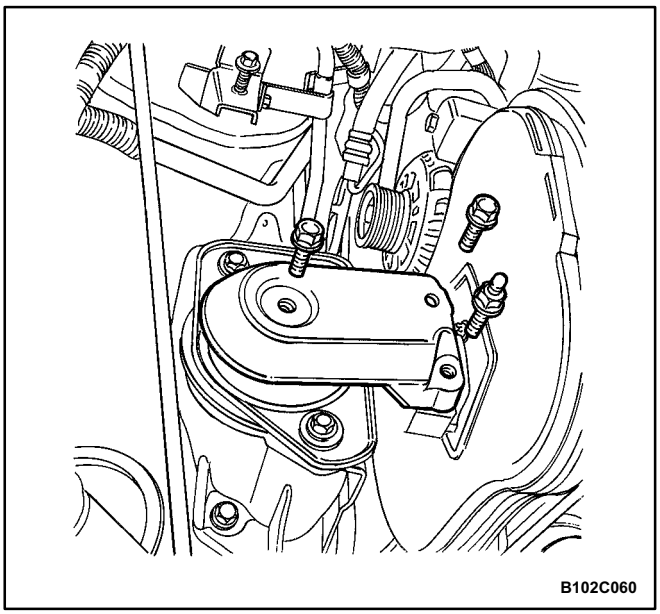

8. Install the engine mount bracket and retaining bolts.

Tighten

Tighten the engine mount bracket retaining bolts to 60 N•m (44 lb•ft).

9. Remove engine assembly lift support J-28467-B.
10. Install the serpentine accessory drive belt. Refer to *Section 6B, Power Steering Pump*.
11. Install the right front wheel well splash shield. Refer to *Section 9R, Body Front End.*
12. Install the air filter housing assembly with the bolts.

Tighten

Tighten the air filter housing assembly bolts to 8 N•m (71 lb•in).

13. Connect the negative battery cable.

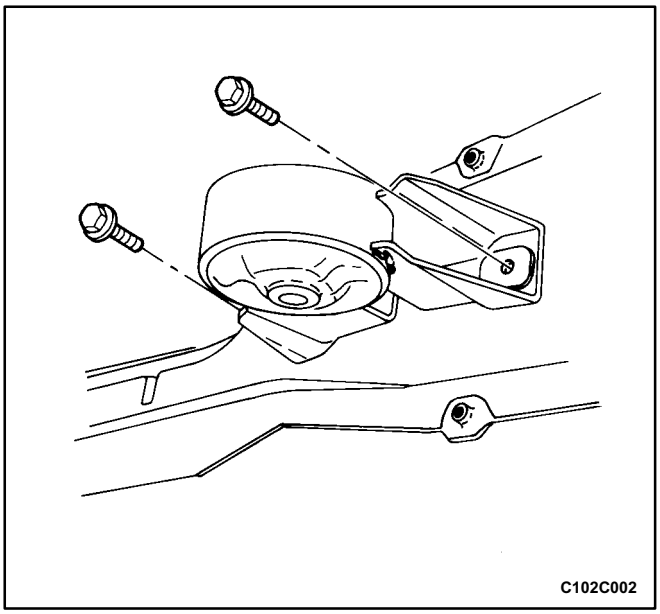

ENGINE MOUNT, FORWARD

Removal Procedure

1. Disconnect the negative battery cable.
2. Raise and suitably support the vehicle.
3. Remove the center member. Refer to *Section 9N, Frame and Underbody.*
4. Remove the bolts securing the engine mount to cen-ter member.
5. Remove the engine mount.

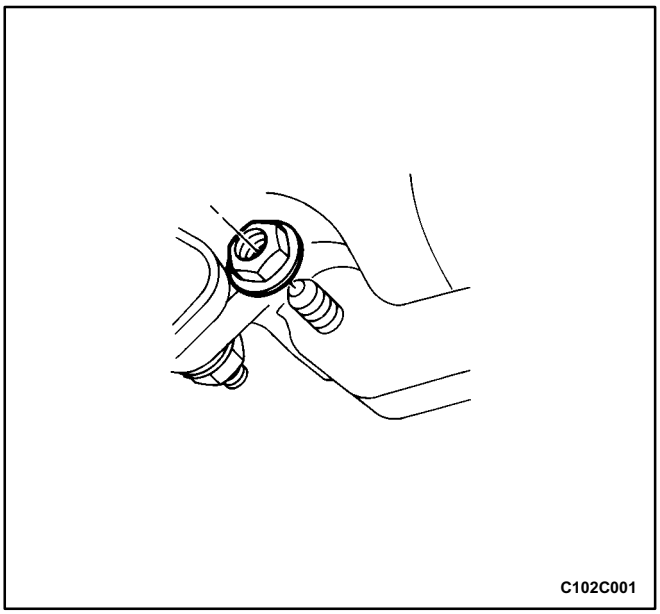

6. Remove the engine mount bracket-to-engine block nuts.

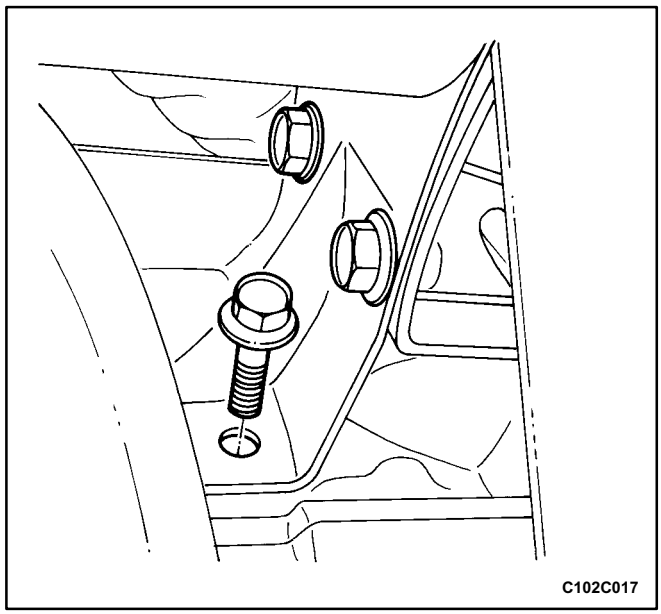

7. Remove the engine mount bracket-to-engine block bolts.
8. Remove the engine mount bracket.

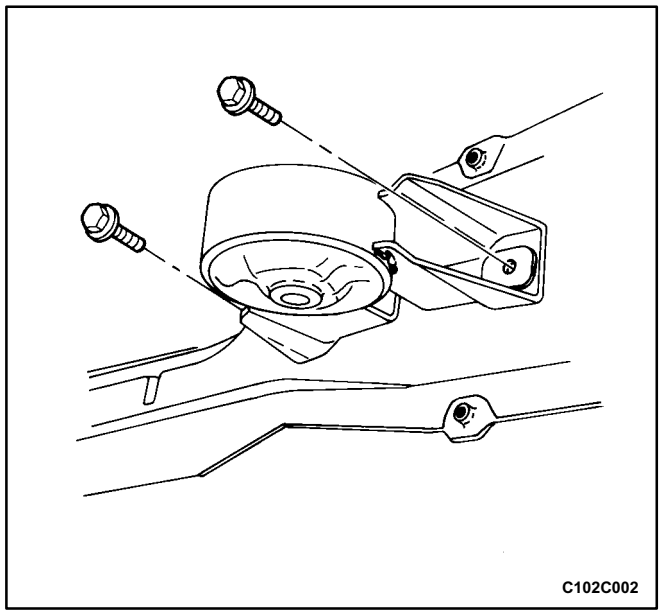

Installation Procedure

1. Install the engine mount and bolts to the center member.

   Tighten

   Tighten the engine mount bolts to 60 N•m (44 lb•ft).

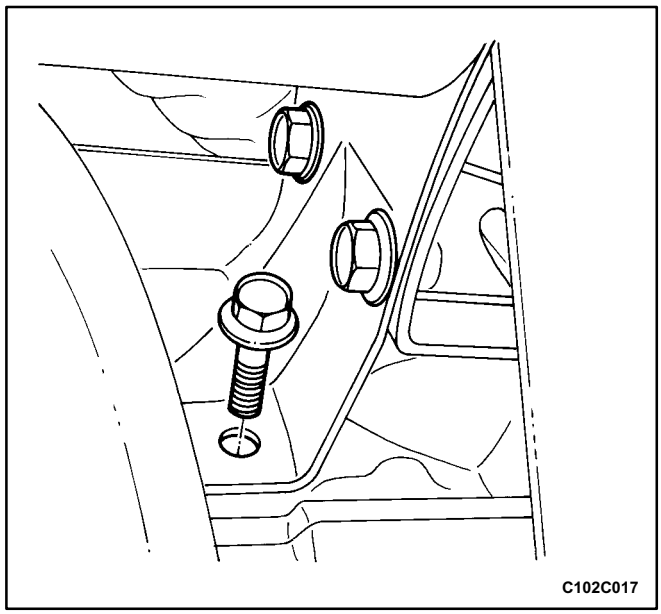

2. Install the engine mount bracket-to-engine block bolts.

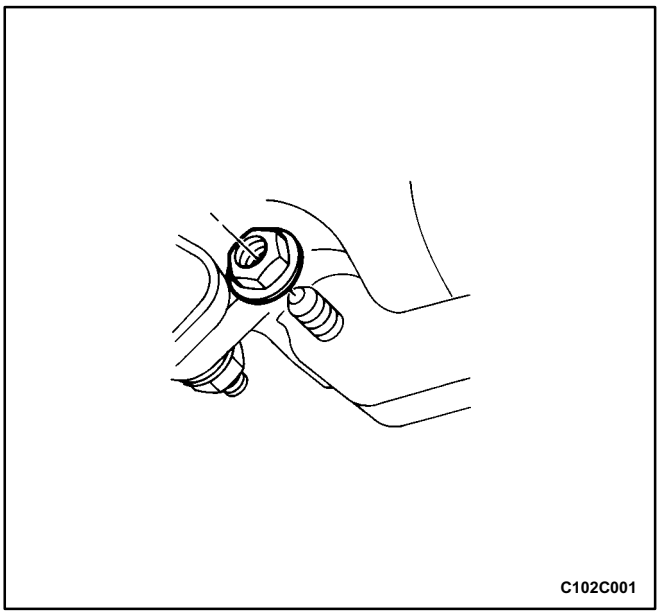

3. Install the engine mount bracket-to-engine block nuts.

   Tighten

   Tighten the engine mount bracket-to-engine block bolts and nuts to 90 N•m (66 lb•ft).
4. Install the center member. Refer to *Section 9N, Frame and Underbody.*
5. Lower the vehicle.
6. Connect the negative battery cable.

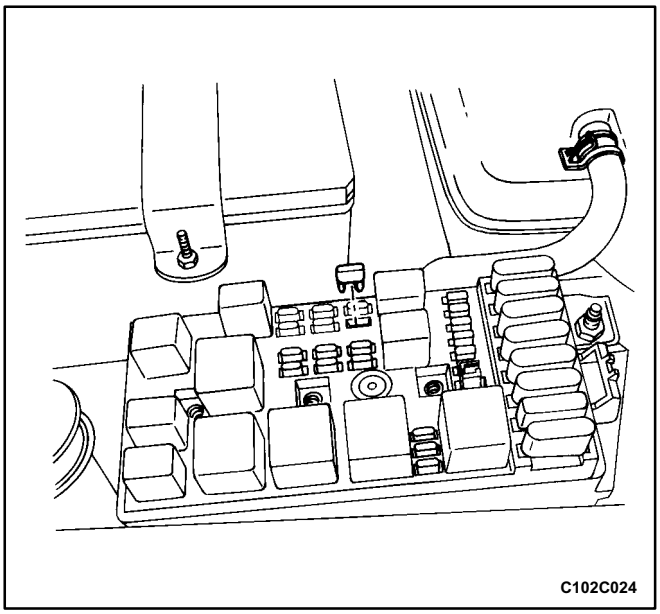

INTAKE MANIFOLD

(Left-Hand Drive Shown, Right-Hand Drive Similar)

Removal Procedure

1. Remove the fuel pump fuse.
2. Start the engine. After it stalls, crank the engine for 10 seconds to rid the fuel system of fuel pressure.
3. Disconnect the negative battery cable.
4. Disconnect the canister purge solenoid from the in-take manifold and loosen the bracket bolt.
5. Drain the engine coolant. Refer to *Section 1D, Engine Cooling.*

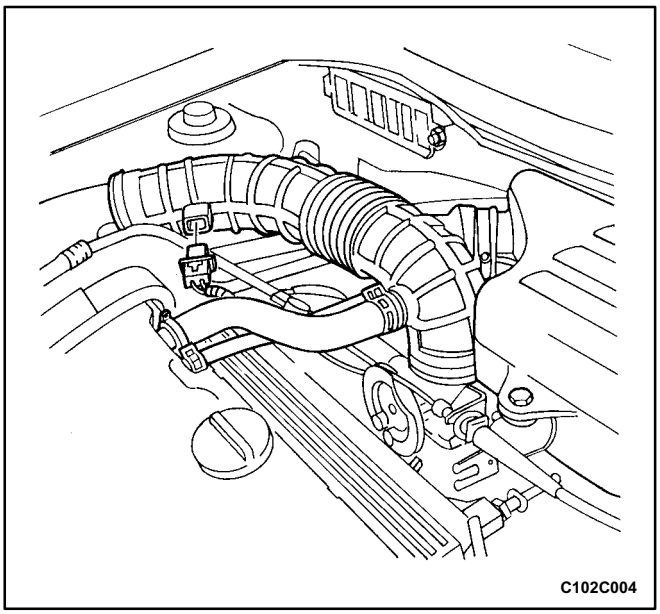

6. Disconnect the manifold air temperature sensor con-nector.
7. Disconnect the air intake tube from the throttle body.

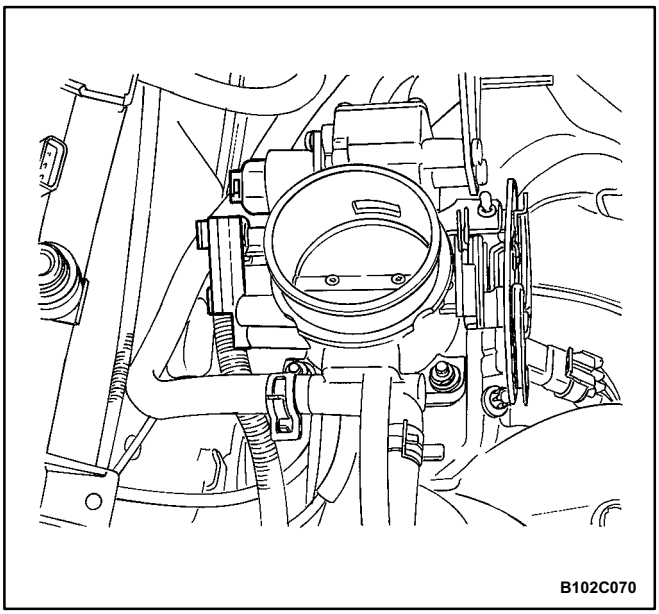

8. Disconnect the idle air control valve connector.
9. Disconnect the throttle position sensor connector.
10. Disconnect the manifold absolute pressure (MAP) sensor connector.
11. Disconnect the coolant hoses at the throttle body.

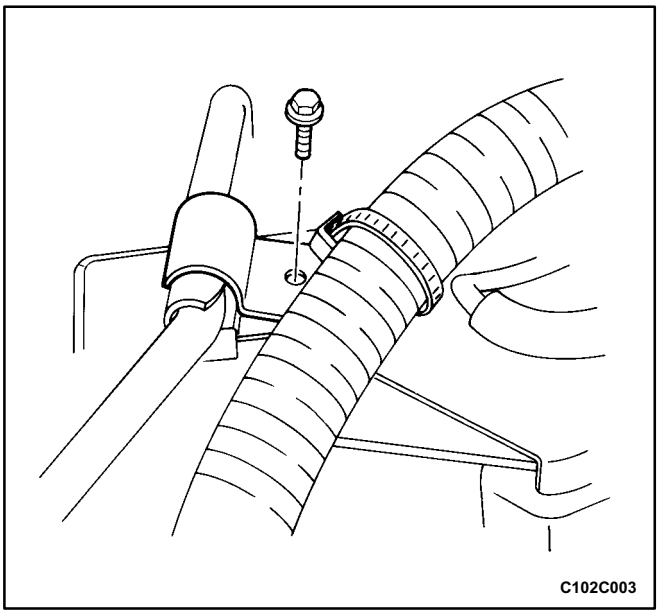

12. Disconnect all of the necessary vacuum hoses, in-cluding the vacuum hose at the fuel pressure regu-lator and the brake booster vacuum hose at the intake manifold.
13. Disconnect the throttle cable from the throttle body and the intake manifold.
14. Remove the throttle cable bracket bolts from the in-take manifold.
15. Remove the throttle cable bracket.
16. Remove the alternator-to-intake manifold strap bracket bolts and strap.
17. Remove the power steering hose clamp bolt, and position the hose clear of the repair area.

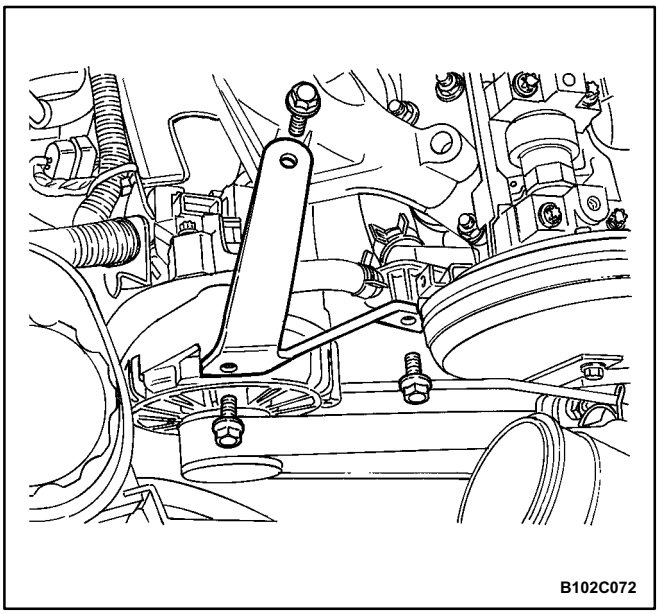

18. Remove the fuel rail and injector cover as an as-sembly. Refer to *Section 1F, Engine Controls (2.0L DOHC).*
19. Remove the alternator-to-intake manifold support bracket bolts.
20. Remove the alternator-to-intake manifold support bracket.
21. Remove the intake manifold support bracket bolt at the engine block and the intake manifold.
22. Remove the intake manifold support bracket.

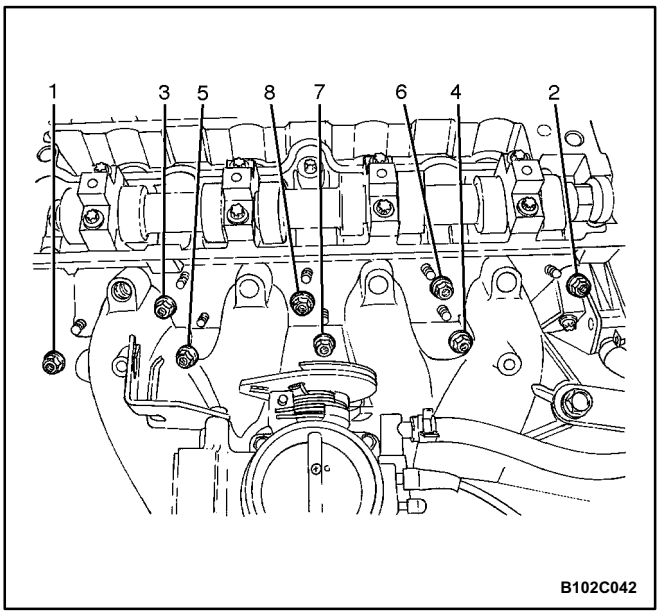

23. Remove the intake manifold retaining bolt and nuts in the sequence shown.
24. Remove the intake manifold.
25. Remove the intake manifold gasket.
26. Clean the sealing surfaces of the intake manifold and the cylinder head.

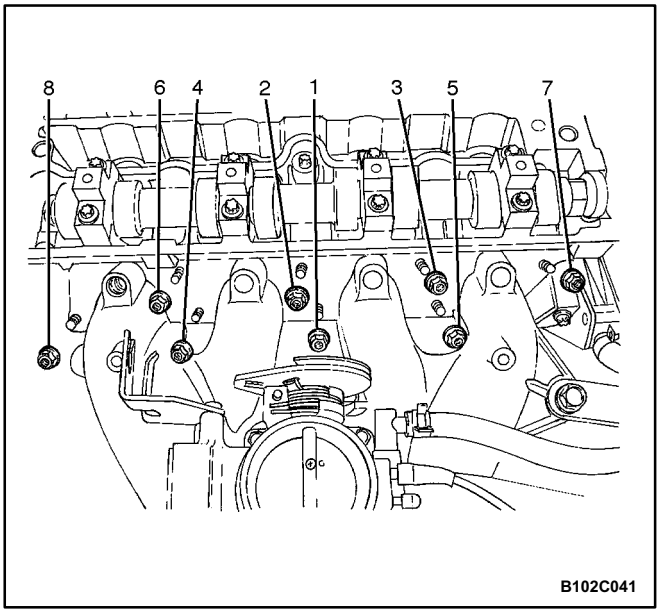

Installation Procedure

1. Install the intake manifold gasket.
2. Install the intake manifold.
3. Install the intake manifold retaining bolt and nuts in the sequence shown.

   Tighten

   Tighten the intake manifold retaining bolt and nuts to 18 N•m (13 lb•ft).
4. Install the alternator-to-intake manifold strap bracket and bolts.

   Tighten

   Tighten the alternator-to-intake manifold strap bracket bolts to 20 N•m (15 lb•ft).

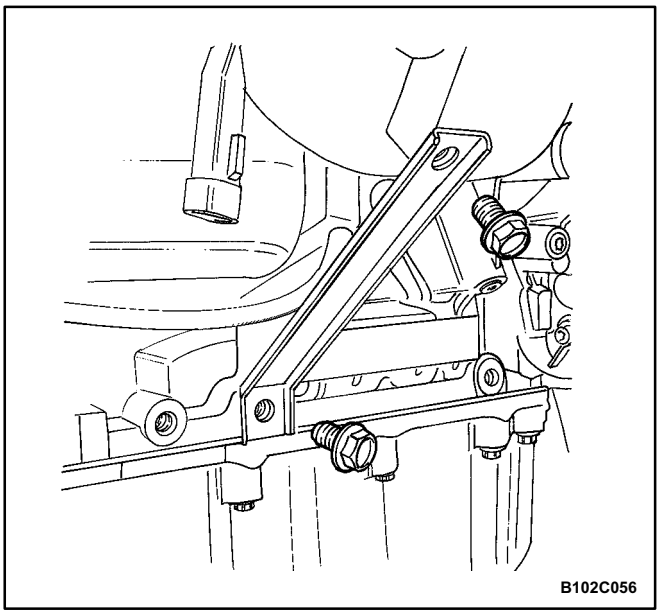

5. Install the intake manifold support bracket.
6. Install the intake manifold support bracket upper bolts to the intake manifold.

   Tighten

   Tighten the intake manifold support bracket upper bolts to the intake manifold to 20 N•m (15 lb•ft).
7. Install the intake manifold support bracket lower bolt to the engine block.

   Tighten

   Tighten the intake manifold support bracket lower bolt to the engine block to 20 N•m (15 lb•ft).
8. Install the alternator-to-intake manifold support bracket and bolts.

   Tighten

   Tighten the alternator-to-intake manifold support bracket bolts to 35 N•m (26 lb•ft).

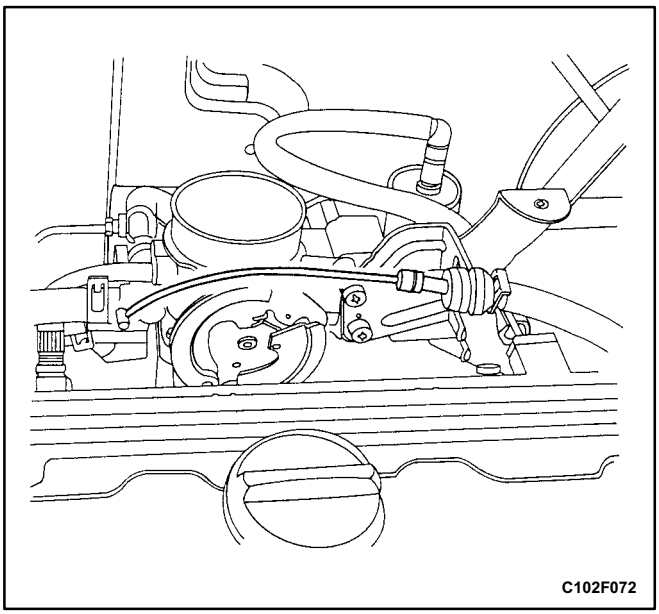

9. Install the fuel rail and injector cover as an assembly. Refer to *Section 1F, Engine Controls (2.0L DOHC).*
10. Install the throttle cable bracket.
11. Install the throttle cable bracket bolts.

Tighten

Tighten the throttle cable bracket bolts to 8 N•m (71 lb•in).

12. Connect the throttle cable to the intake manifold and the throttle body.
13. Connect all of the necessary vacuum lines that were previously disconnected.

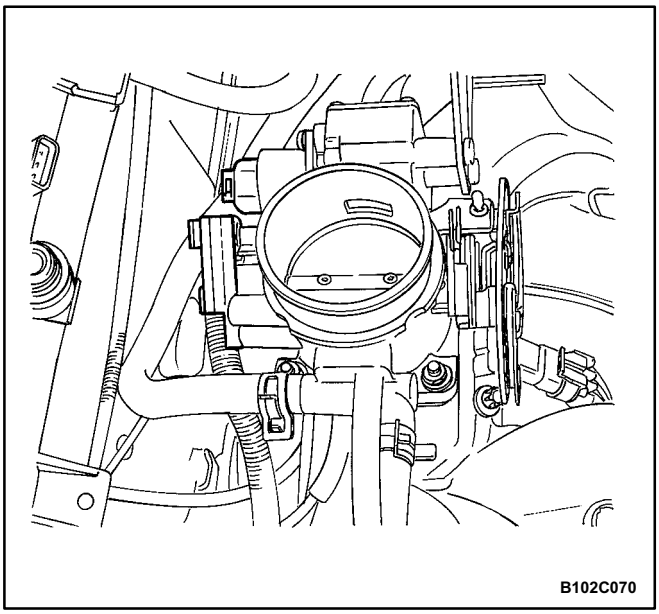

14. Connect the MAP sensor connector.
15. Connect the coolant hoses to the throttle body.
16. Connect the idle air control valve connector.
17. Connect the throttle position sensor connector.
18. Position the power steering hose in place and install the clamp bolt.

Tighten

Tighten the power steering hose clamp bolt to 8 N•m (71 lb•in).

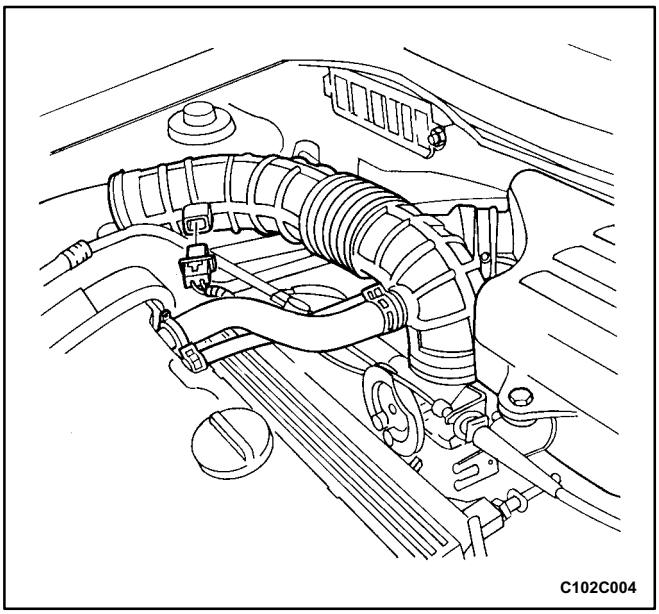

19. Connect the air intake tube to the throttle body.
20. Connect the manifold air temperature sensor con-nector.
21. Connect the canister purge solenoid at the intake manifold and tighten the bracket bolt.

Tighten

Tighten the canister purge solenoid bracket bolt to 5 N•m (44 lb•in).

22. Install the fuel pump fuse.
23. Connect the negative battery cable.
24. Refill the engine cooling system. Refer to *Section 1D, Engine Cooling.*

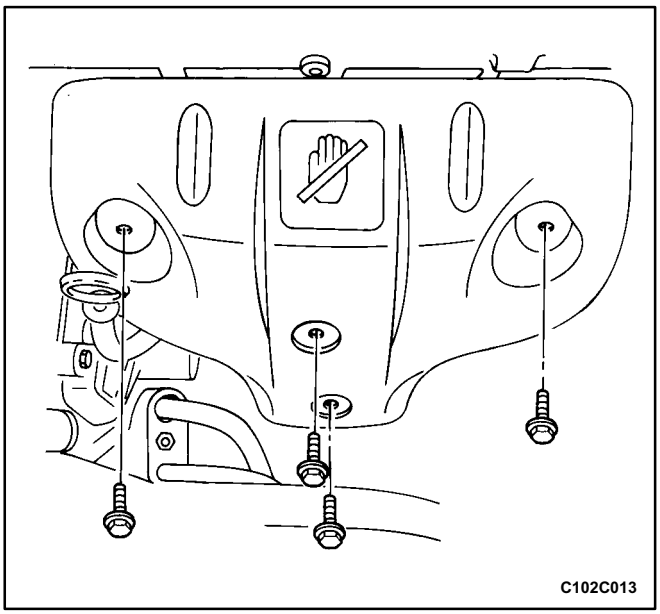

EXHAUST MANIFOLD

Removal Procedure

1. Disconnect the negative battery cable.
2. Disconnect the oxygen sensor connector.
3. Remove the exhaust manifold heat shield bolts.
4. Remove the exhaust manifold heat shield.

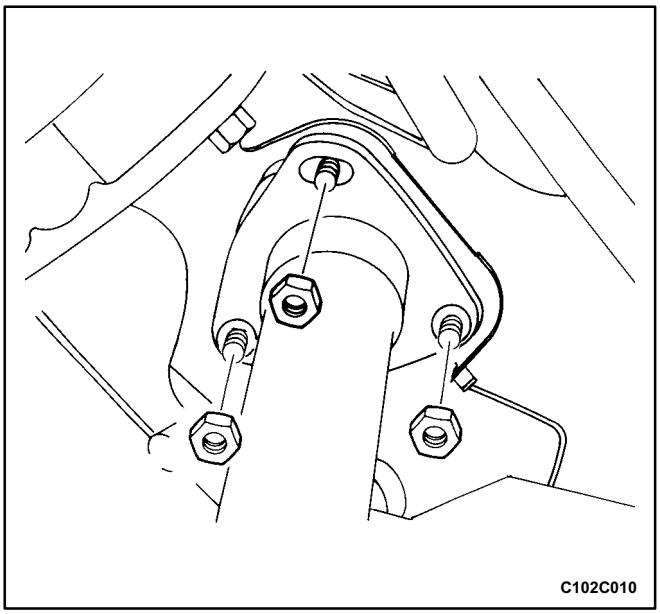

5. Remove the exhaust flex pipe retaining nuts from the exhaust manifold studs (2.0L DOHC).

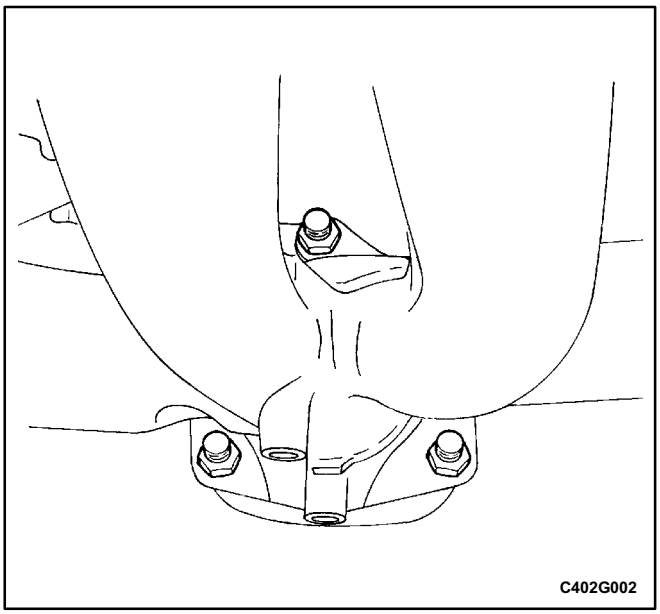

6. Remove the auxiliary catalytic converter upper flange nuts (2.2L DOHC).

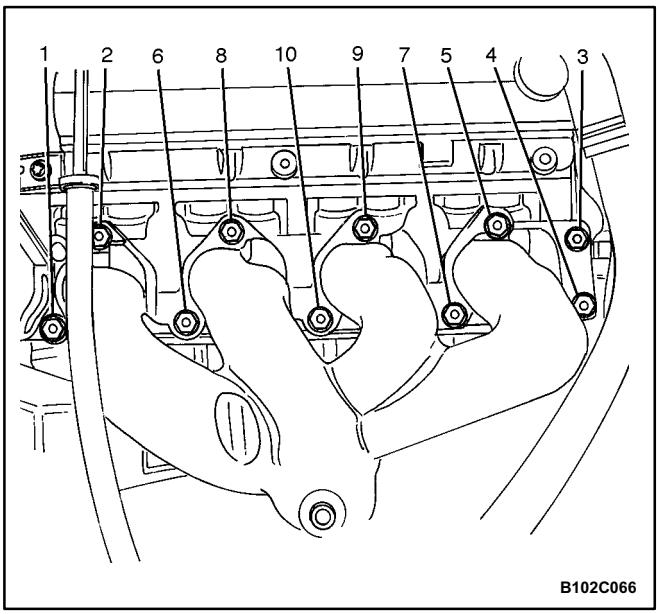

7. Remove the exhaust manifold retaining nuts in the sequence shown.
8. Remove the exhaust manifold.
9. Remove the exhaust manifold gasket.
10. Clean the sealing surfaces of the exhaust manifold and the cylinder head.

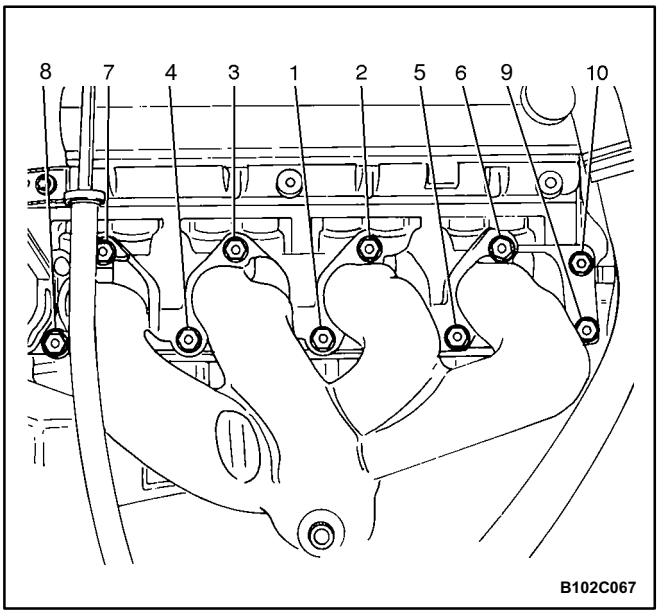

Installation Procedure

1. Install the exhaust manifold gasket.
2. Install the exhaust manifold.
3. Install the exhaust manifold retaining nuts and tighten in the sequence shown your complete passes and tighten 1.2 and 3 bolts one more time.

Tighten

Tighten the exhaust manifold retaining nuts 15 N•m (11 lb•ft).

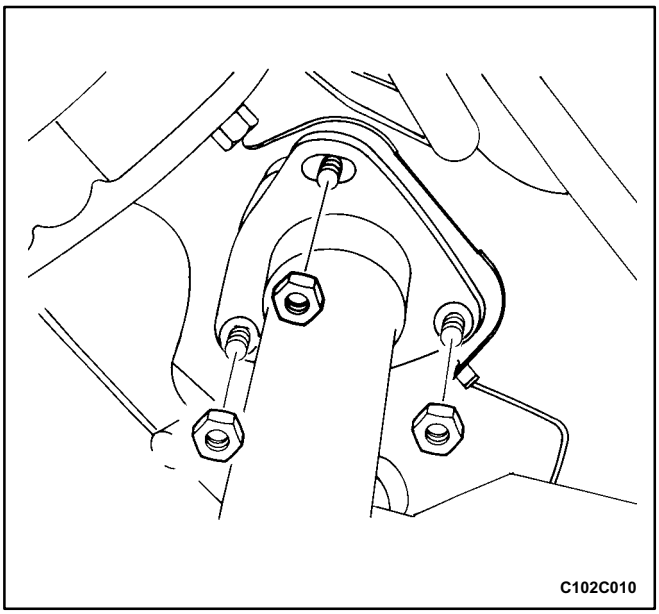

4. Install the exhaust flex pipe retaining nuts to the ex-haust manifold (2.0L DOHC).

Tighten

Tighten the exhaust flex pipe-to-exhaust manifold retaining nuts to 22 N•m (16 lb•ft).

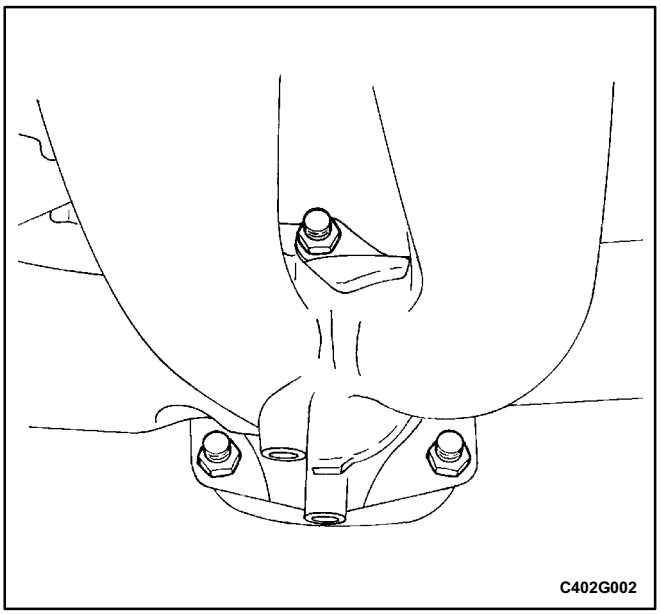

5. Install the auxiliary catalytic converter upper flange nuts (2.2L DOHC).

Tighten

Tighten the auxiliary catalytic converter-to-exhaust manifold nuts to 40 N•m (30 lb•ft).

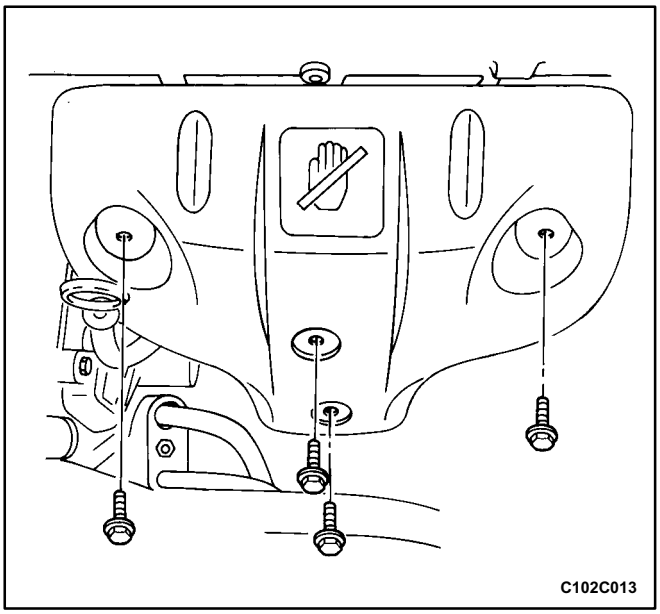

6. Install the exhaust manifold heat shield.
7. Install the exhaust manifold heat shield bolts.

Tighten

Tighten the exhaust manifold heat shield bolts to 8 N•m (71 lb•in).

8. Connect the oxygen sensor connector.
9. Connect the negative battery.

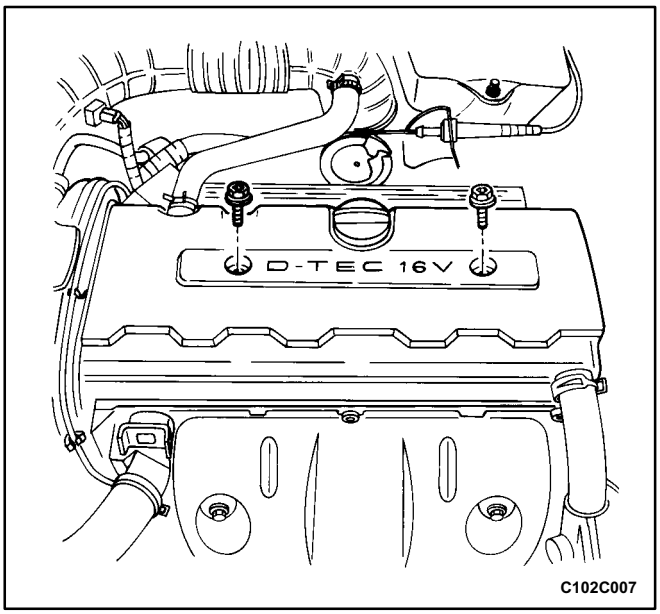

CAMSHAFT GEARS

Removal Procedure

1. Disconnect the negative battery cable.
2. Remove the timing belt. Refer to "Timing Belt" in this section.
3. Remove the spark plug cover bolts.
4. Remove the spark plug cover.
5. Disconnect the ignition wires from the spark plugs.
6. Disconnect the crankcase breather tubes from the valve cover.

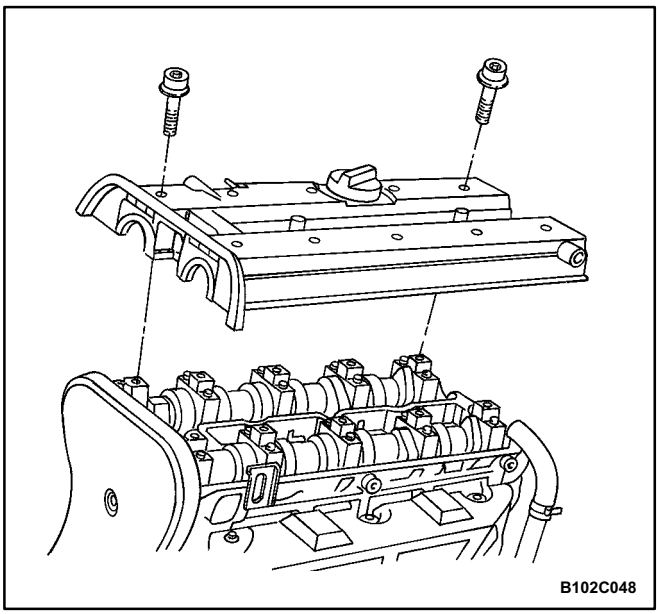

7. Remove the valve cover bolts.
8. Remove the valve cover washers.
9. Remove the valve cover and the valve cover gasket.

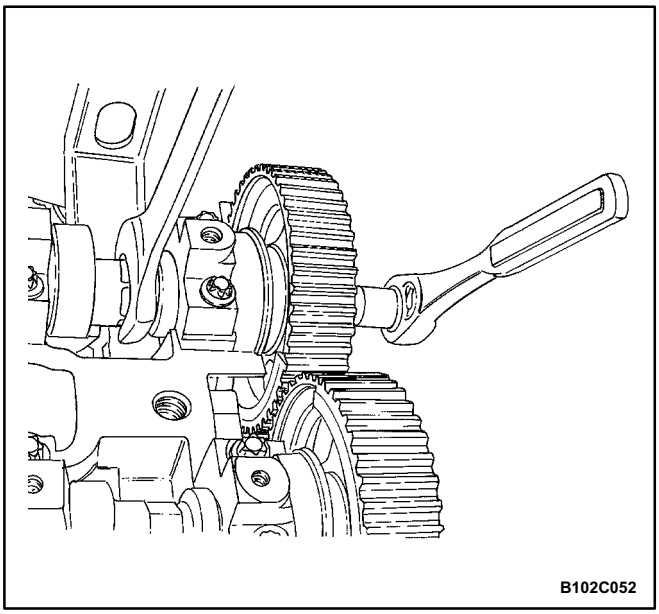

Notice: Take extreme care to prevent any scratches, nicks or damage to the camshafts.

10. While holding the intake camshaft firmly in place, remove the intake camshaft gear bolt.
11. Remove the intake camshaft gear.
12. While holding the exhaust camshaft firmly in place, remove the exhaust camshaft gear bolt.
13. Remove the exhaust camshaft gear.

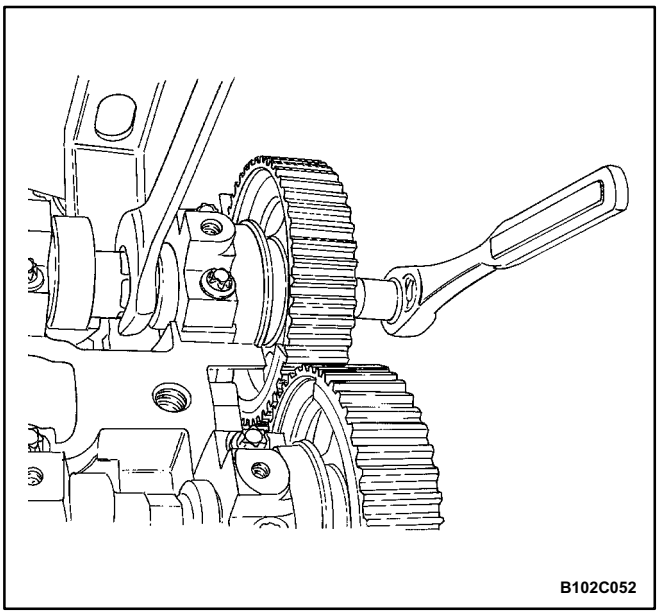

Installation Procedure

Notice: Take extreme care to prevent any scratches, nicks or damage to the camshafts.

1. Install the intake camshaft gear.
2. While holding the intake camshaft firmly in place, install the intake camshaft gear bolt.

Tighten

Tighten the intake camshaft gear bolt to 50 N•m (37 lb•ft), turn another 60 degrees plus 15 degrees.

3. Install the exhaust camshaft gear.
4. While holding the exhaust camshaft firmly in place, install the exhaust camshaft gear bolt.

Tighten

Tighten the exhaust camshaft gear bolt to 50 N•m (37 lb•ft), turn another 60 degrees plus 15 degrees using the angular torque gauge KM-470-B.

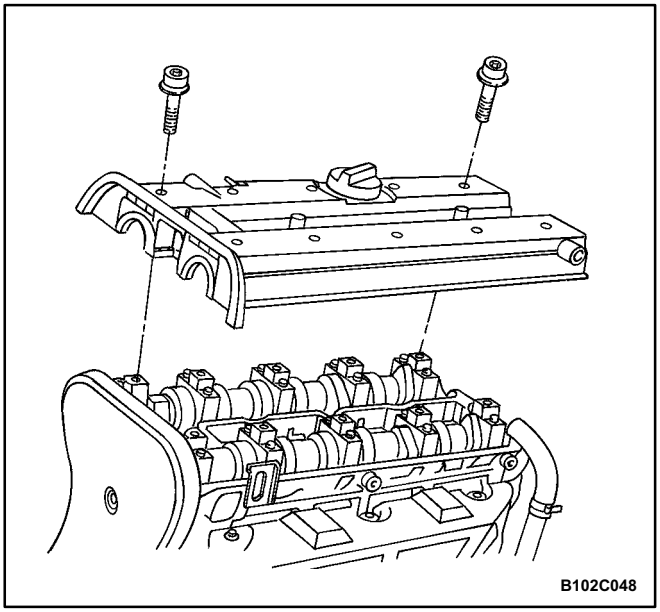

5. Apply a small amount of gasket sealant to the cor-ners of the front camshaft caps and to the top of the rear valve cover-to-cylinder head seal.
6. Install the valve cover and the valve cover gasket.
7. Install the valve cover washers.
8. Install the valve cover bolts.

Tighten

Tighten the valve cover bolts to 8 N•m (71 lb•in).

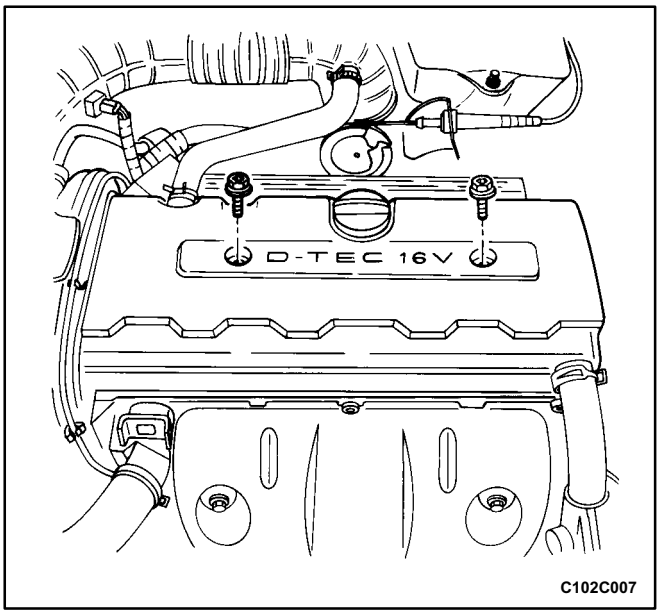

9. Connect the crankcase breather tubes to the valve cover.
10. Connect the ignition wires to the spark plugs.
11. Install the spark plug cover.
12. Install the spark plug cover bolts.

Tighten

Tighten the spark plug cover bolts to 3 N•m (27 lb•in).

13. Install the timing belt. Refer to "Timing Belt" in this section.
14. Connect the negative battery cable.

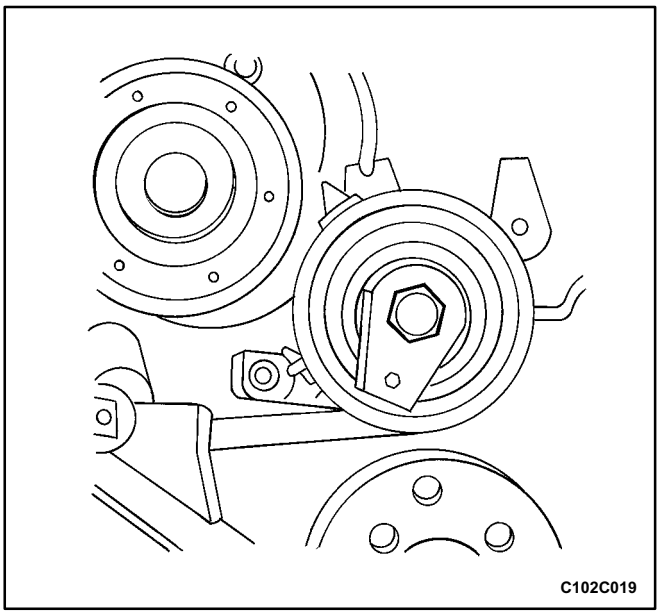

REAR TIMING BELT COVER

Tools Required

KM-470-B Torque Angular Gauge

Removal Procedure

1. Disconnect the negative battery cable.
2. Remove the timing belt. Refer to "Timing Belt" in this section.
3. Remove the camshaft gears. Refer to "Camshaft Gears" in this section.
4. Remove the timing belt automatic tensioner bolt.
5. Remove the timing belt automatic tensioner.

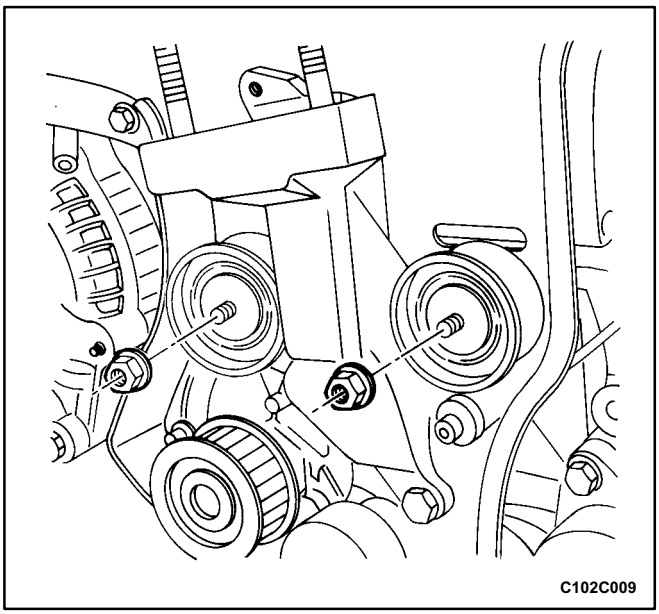

6. Remove the timing belt idler pulley nuts.
7. Remove the timing belt idler pulleys.
8. Remove the engine mount retaining bolts.
9. Remove the engine mount.
10. Remove the crankshaft timing belt drive gear bolt.
11. Remove the crankshaft gear.

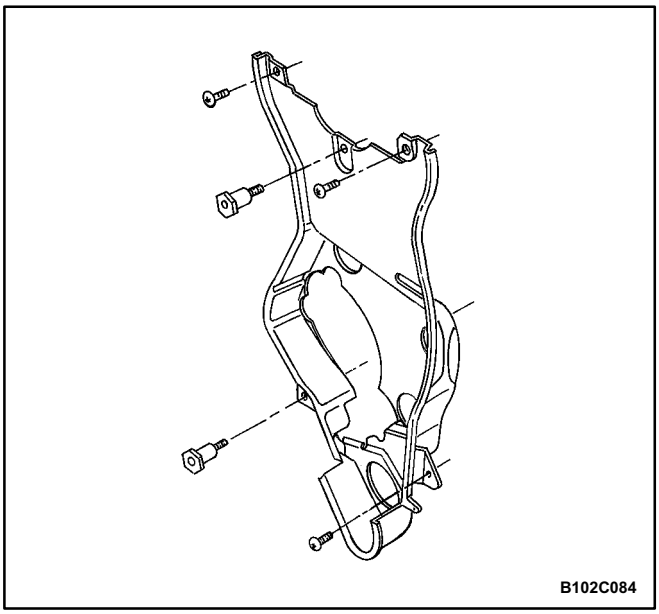

12. Remove the rear timing belt cover bolts.
13. Remove the rear timing belt cover.

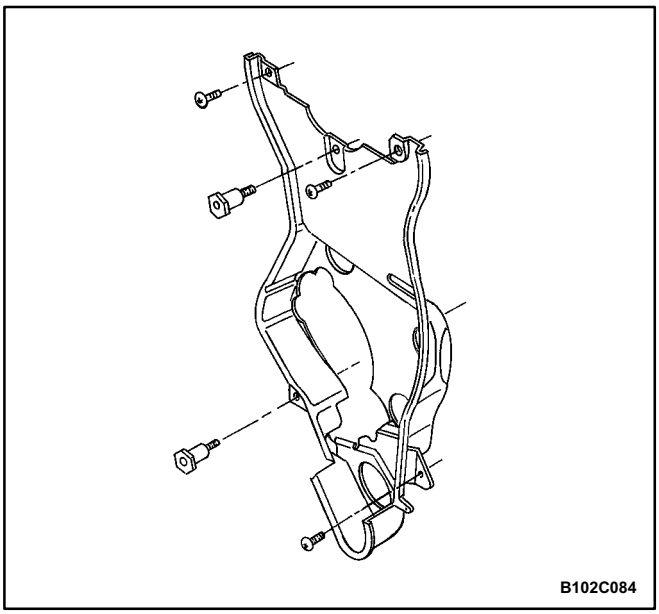

Installation Procedure

1. Install the rear timing belt cover.
2. Install the rear timing belt cover bolts.

Tighten

Tighten the rear timing belt cover bolts to 6 N•m (53 lb•in).

3. Install the engine mount and retaining bolts.

Tighten

Tighten the engine mount retaining bolts to 60 N•m (44 lb•ft).

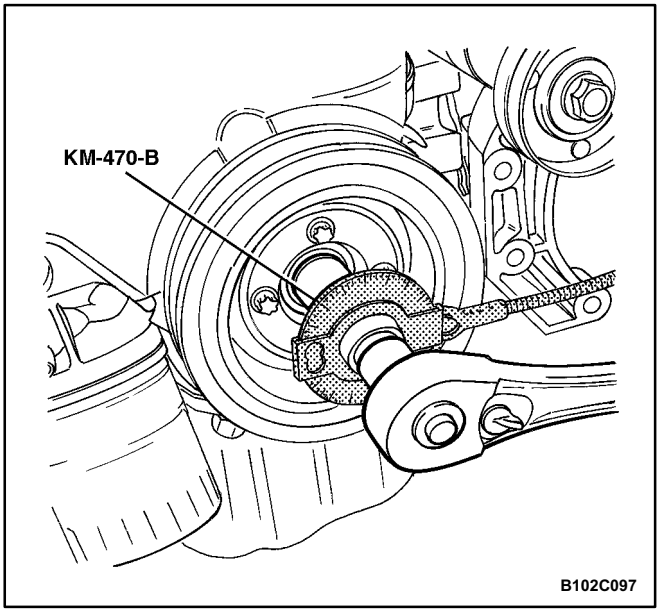

4. Install the timing belt idler pulleys.
5. Install the timing belt idler pulley nuts.

Tighten

Tighten the timing belt idler pulley nuts to 25 N•m (18 lb•ft).

6. Install the crankshaft timing belt drive gear and bolt.

Tighten

Tighten the crankshaft timing belt drive gear bolt to 130 N•m (96 lb•ft) plus 40° plus 50° using the an-gular torque gauge KM-470-B.

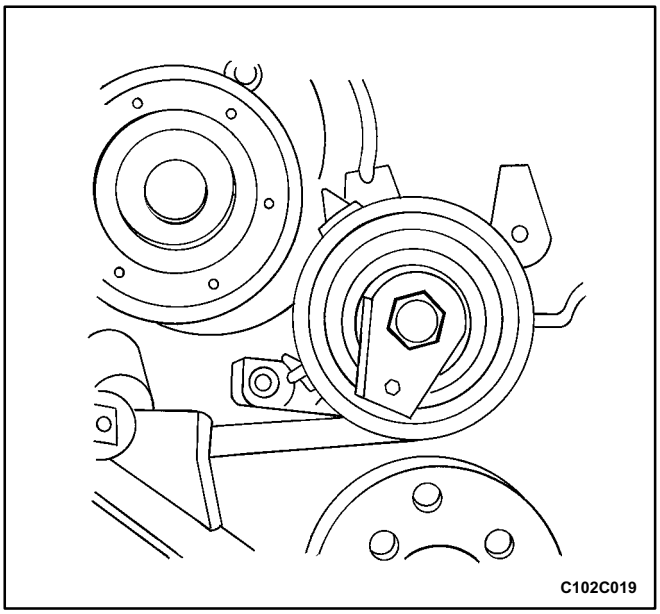

7. Install the timing belt automatic tensioner and bolt.
8. Install the camshaft gears. Refer to "Camshaft Gears" in this section.
9. Install the timing belt and timing belt cover. Refer to "Timing Belt" in this section.
10. Connect the negative battery cable.

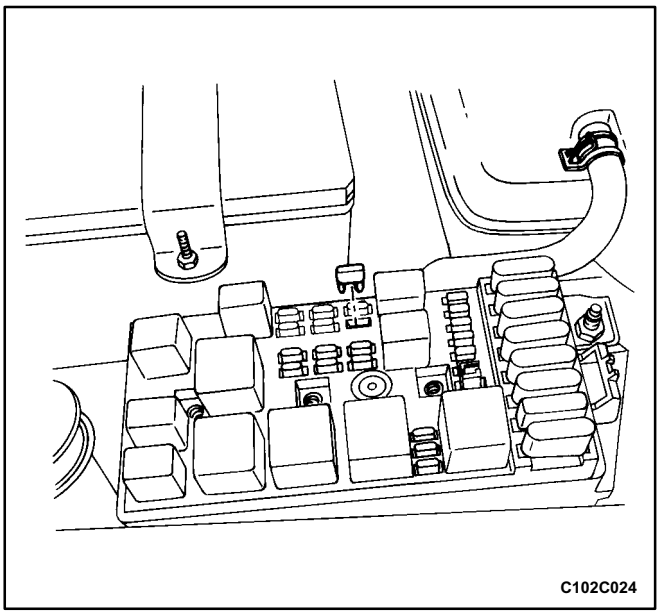

ENGINE

(Left-Hand Drive Shown, Right-Hand Drive Similar)

Removal Procedure

1. Remove the fuel pump fuse.
2. Start the engine. After it stalls, crank the engine for 10 seconds to rid the fuel system of fuel pressure.
3. Remove the hood. Refer to *Section 9R, Body Front End*.
4. Drain the engine oil.
5. Disconnect the negative battery cable.

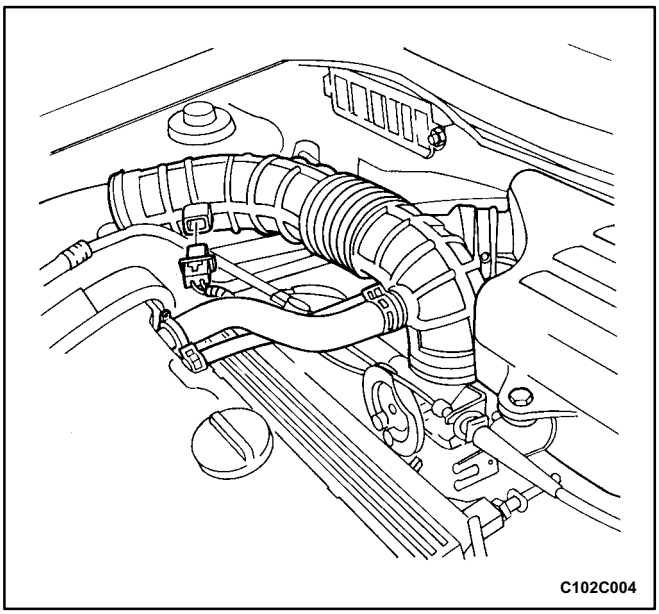

6. Discharge the air conditioning system, if equipped. Refer to *Section 7B, Manual Control Heating, Ventilation, and Air Conditioning System.*
7. Disconnect the manifold air temperature sensor connector.
8. Remove the air intake tube.
9. Disconnect the breather tubes from the valve cover.
10. Remove the right front wheel. Refer to *Section 2E, Tires and Wheels.*
11. Remove the right front wheel well splash shield. Refer to *Section 9R, Body Front End.*
12. Remove the accessory drive belt. Refer to *Section 6B, Power Steering Pump.*

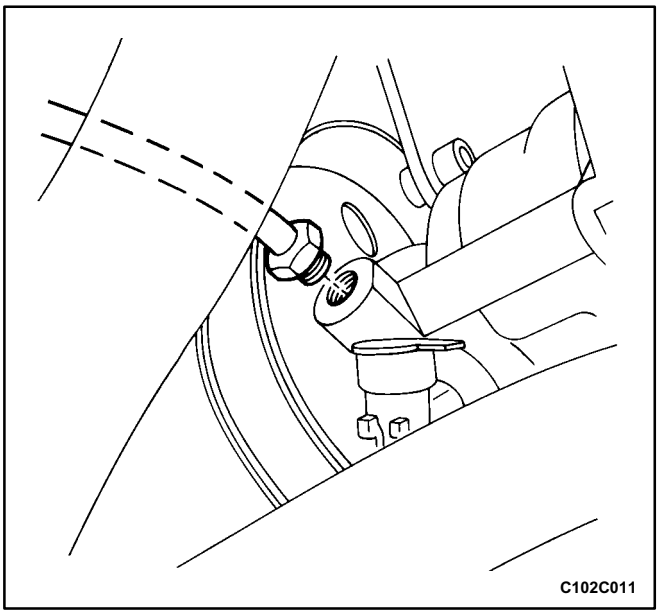

13. Drain the engine coolant. Refer to *Section 1D, En-gine Cooling.*
14. Remove the cooling system radiator and the engine cooling fans. Refer to *Section 1D, Engine Cooling.*
15. Disconnect the upper radiator hose from the ther-mostat housing.
16. Disconnect the power steering return hose from the power steering pump. Collect the oil in a suitable container.
17. Disconnect the power steering pressure hose from the power steering pump. Collect the oil in a suitable container.
18. Disconnect the electrical connector at the DIS igni-tion coil and the ECM ground terminal.

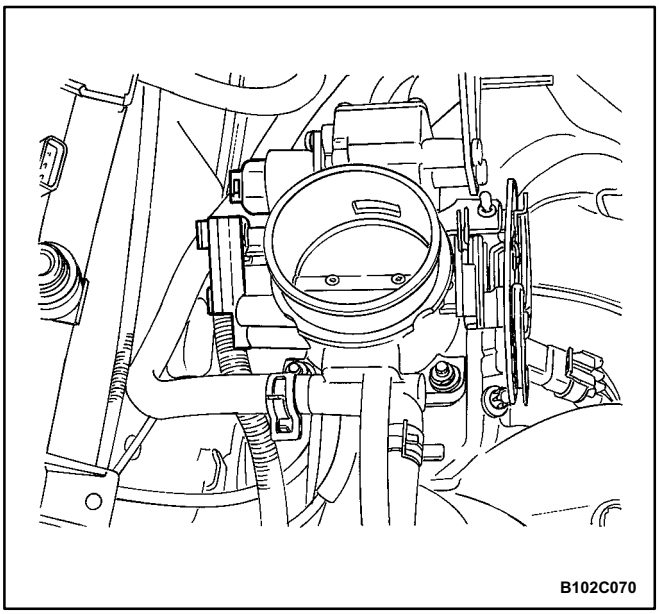

19. Disconnect the oxygen sensor connector.
20. Disconnect the idle air control (IAC) valve connector and the mainfold absolute pressure (MAP) sensor connector.
21. Disconnect the throttle position sensor (TPS) con-nector.
22. Disconnect the engine coolant temperature (ECT) sensor connector.
23. Disconnect the coolant temperature sensor (CTS) connector.
24. Disconnect the alternator voltage regulator con-nector and power lead.
25. Disconnect the camshaft position (CMP) sensor connector.

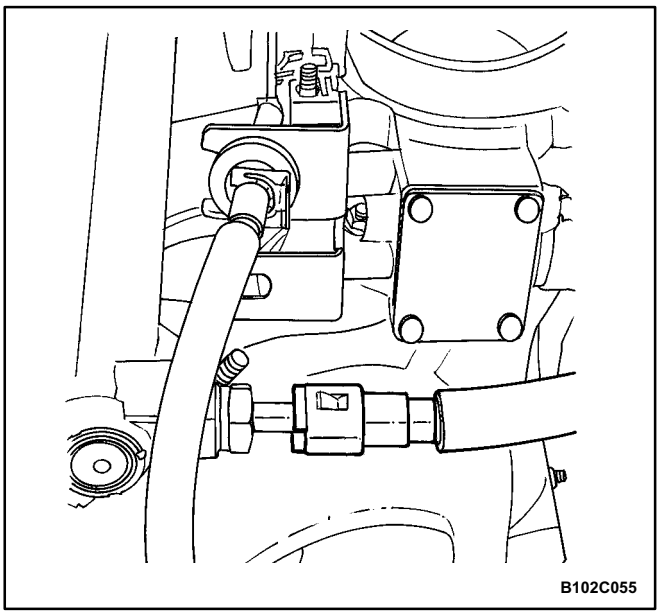

26. Disconnect all of the necessary vacuum lines in-cluding the brake booster vacuum hose.
27. Disconnect the fuel return line at the fuel pressure regulator.
28. Disconnect the fuel feed line at the fuel rail.
29. Remove the fuel rail and injector channel cover as an assembly. Refer to *Section 1F, Engine Controls (2.0L DOHC)*.

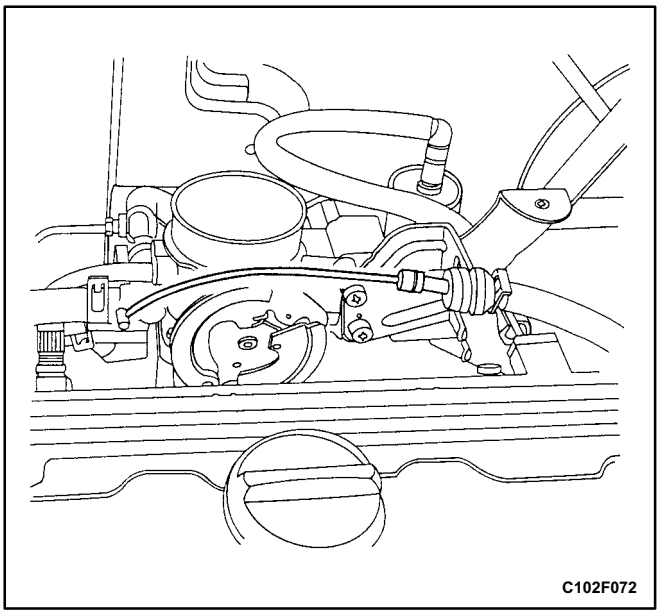

30. Disconnect the throttle cable from the throttle body and the intake manifold bracket.
31. Disconnect the coolant hose at the throttle body.
32. Disconnect the heater outlet hose at the coolant pipe.
33. Disconnect the coolant bypass hose from the cylin-der head.
34. Disconnect the surge tank coolant hose from the coolant pipe.
35. Disconnect the lower radiator hose from the coolant pipe.
36. Disconnect the starter solenoid "S" terminal wire and power lead.
37. Remove the A/C compressor. Refer to *Section 7B, Manual Control Heating, Ventilation, and Air Condi-tioning System.*

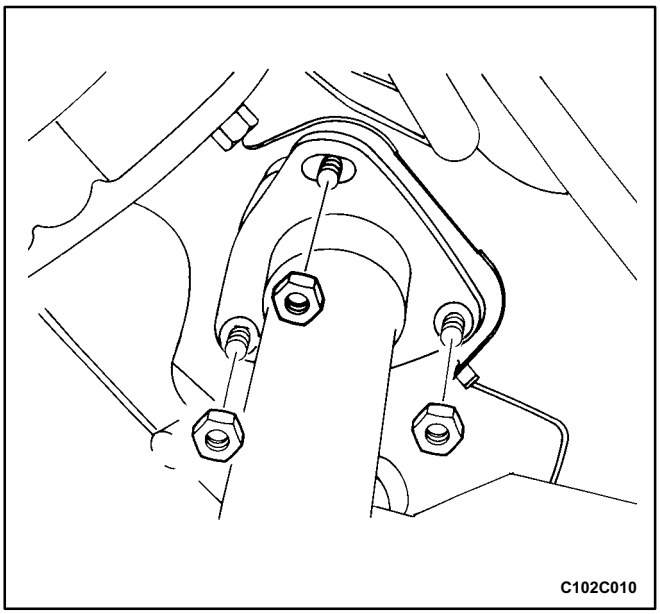

(2.0L DOHC)

38. Remove the exhaust flex pipe retaining nuts from the exhaust manifold studs and the support bracket.
39. Remove the exhaust flex pipe retaining nuts from the catalytic converter.
40. Remove the exhaust flex pipe.

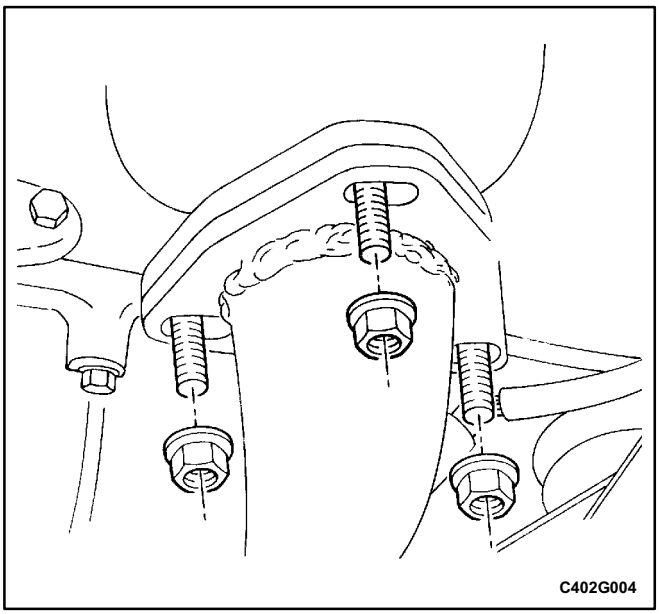

(2.2L DOHC)

41. Remove the auxiliary catalytic converter lower flange nuts.

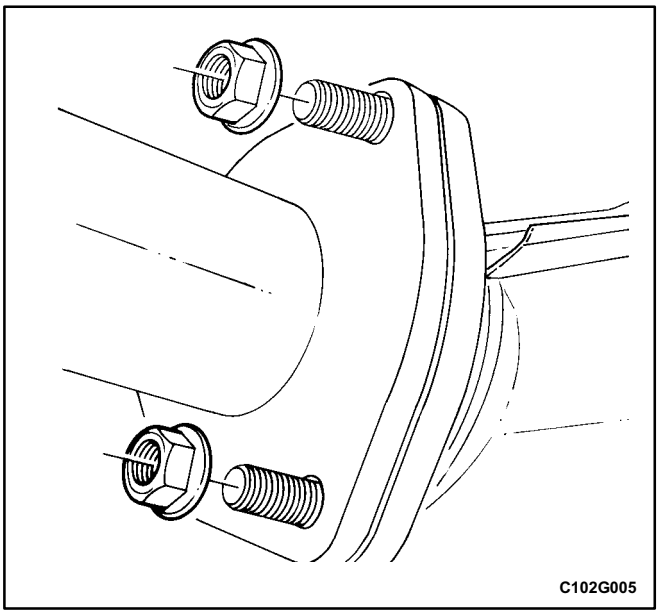

42. Remove the nuts that secure the front muffler pipe to the main catalytic converter.
43. Remove the rubber hangers that attach the con-necting pipe to the vehicle.

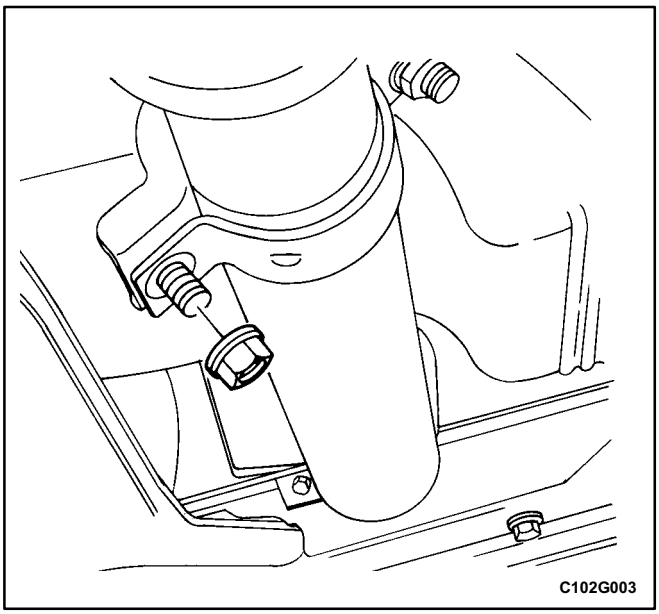

44. Remove the connecting pipe mounting bracket nuts and the bracket.
45. Remove the main catalytic converter and the con-necting pipe.

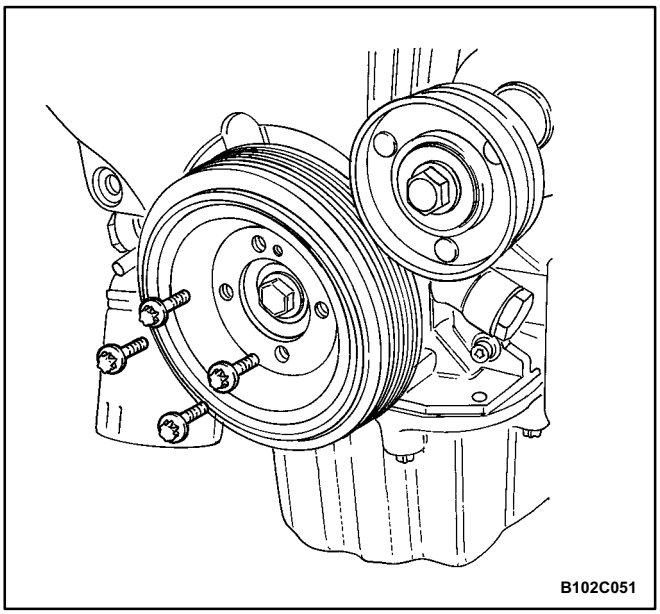

46. Remove the crankshaft pulley bolts.
47. Remove the crankshaft pulley.
48. Disconnect the vacuum lines at the charcoal canis-ter purge (CCP) and the exhaust gas recirculation (EGR) solenoids.
49. Disconnect the electrical connector at the CCP and the EGR solenoid.
50. Disconnect the electrical connector at the oil pres-sure switch.
51. Disconnect the crankshaft position and knock sen-sor connectors.
52. Support the transmission with a floor jack.
53. Remove the center member. Refer to *Section 9N, Frame and Underbody*.
54. Install the engine lifting device.

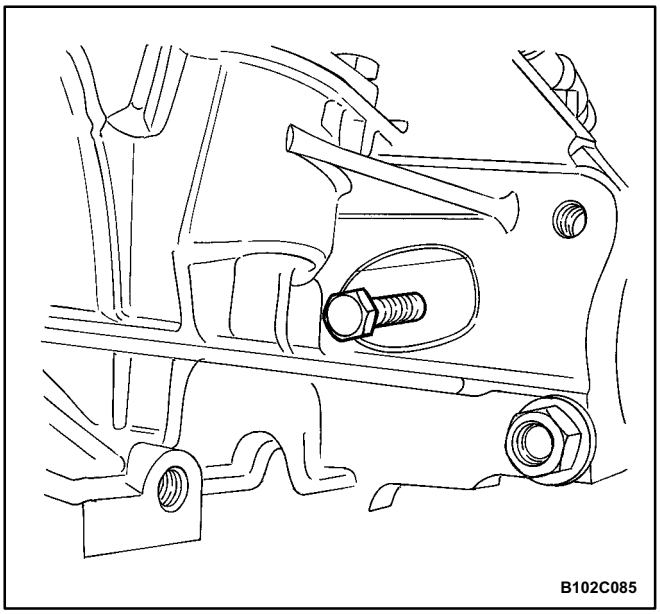

55. Remove the transaxle torque converter bolts, if au-tomatic transaxle equipped.
56. Remove the transaxle bell housing bolts and the oil pan flange bolts.
57. Remove the right engine mount bracket. Refer to *Section 5B, FiveSpeed Manual Transaxle,* or *Section 5A2, ZF4HP14 Automatic Transaxle and 5A3, AISIN 50-40LE Automatic Transaxle.*
58. Remove the resonator bolts and resonator.
59. Remove the air filter housing and bolts.

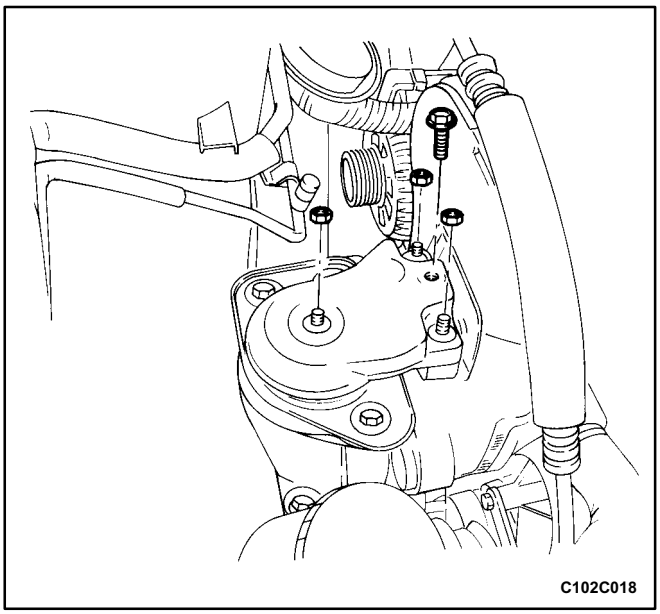

60. Disconnect the right engine mount bracket from the engine mount and engine by removing the retaining bolts.
61. Separate the engine block from the transaxle. Re-move the engine.

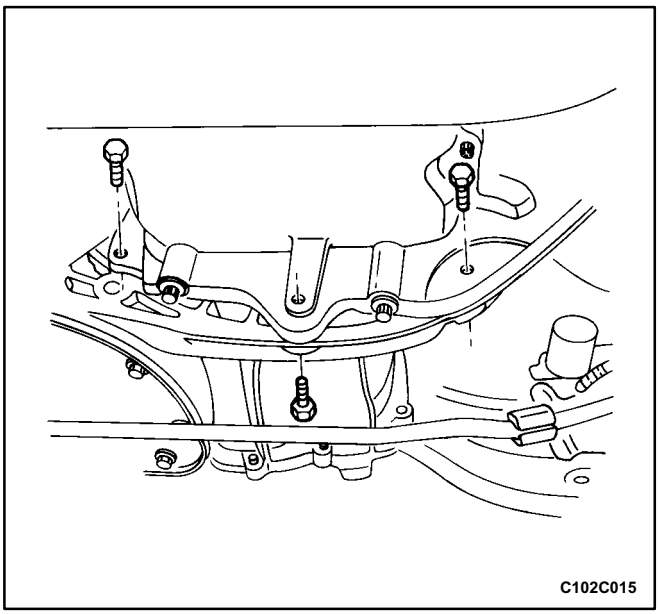

Installation Procedure

1. Install the engine into the engine compartment.
2. Align the engine alignment pins to the transaxle.
3. Install the transaxle bell housing bolts.

Tighten

Tighten the transaxle bell housing bolts to 75 N•m (55 lb•ft).

4. Install the oil pan flange-to-transaxle bolts.

Tighten

Tighten the oil pan flange-to-transaxle bolts to 40 N•m (30 lb•ft).

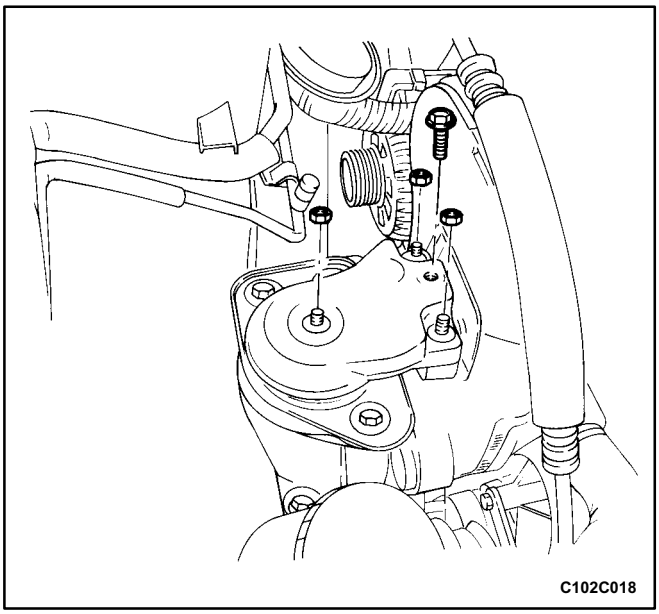

5. Install the right engine mount bracket to the engine block mount and the frame mount.
6. Install the right engine mount bracket retaining bolts and the nut.

Tighten

Tighten the right engine mount bracket retaining bolts and the nut to 60 N•m (44 lb•ft).

7. Install the rear engine/transmission mount bracket. Refer to S*ection 5A2, ZF-4-HP-14 Automatic Trans-axle and 5A3, AISIN 50-40LE Automatic Transaxle.*
8. Install the center member. Refer to *Section 9N, Frame and Underbody.*

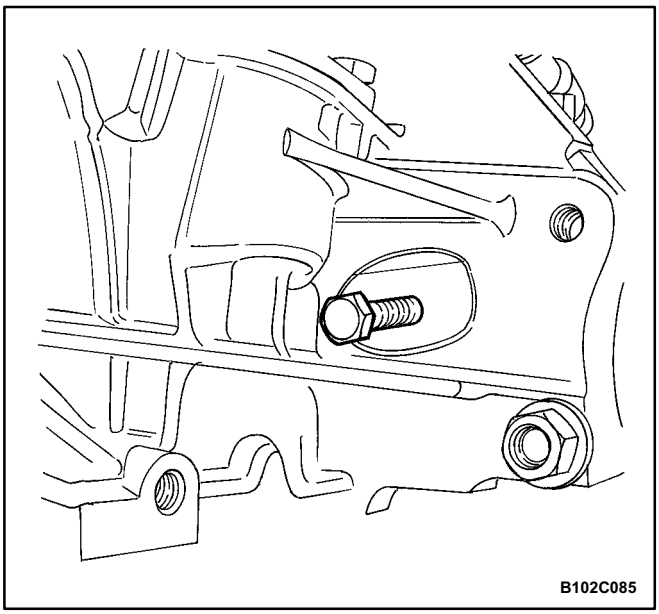

9. Remove the floor jack used for support of the trans-axle.
10. Remove the engine lifting device.
11. Install the transaxle torque converter bolts, if auto-matic transaxle equipped.

Tighten

Tighten the transaxle torque converter bolts to 60 N•m (44 lb•ft).

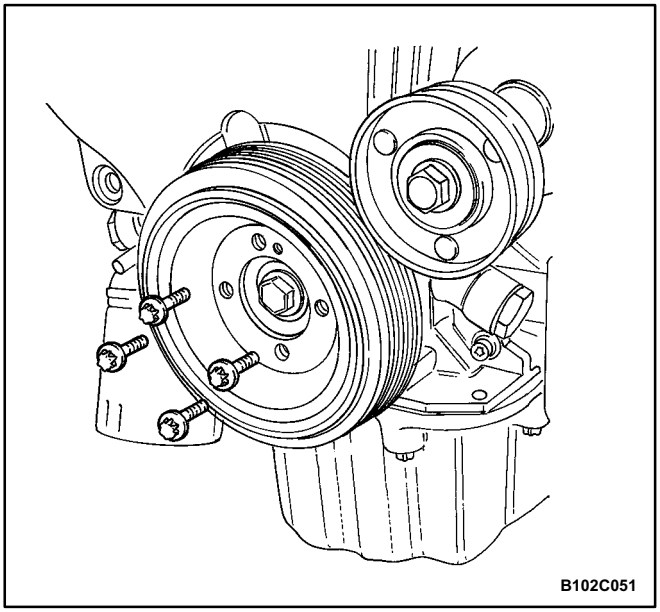

12. Connect the vacuum lines at the charcoal canister purge solenoid.
13. Connect the electrical connector to the charcoal canister purge solenoid.
14. Connect the oil pressure switch connector.
15. Install the crankshaft pulley.
16. Install the crankshaft pulley bolts.

Tighten

Tighten the crankshaft pulley bolts to 20 N•m (15 lb•ft) using a torque wrench.

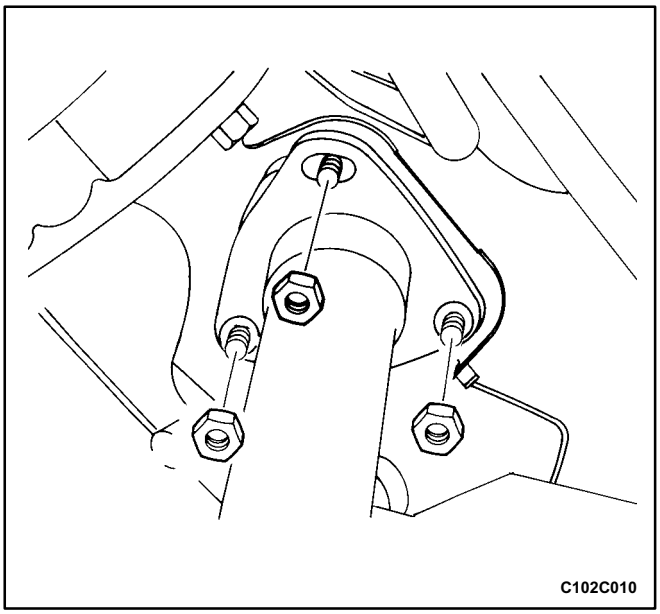

17. Connect the crankshaft position and knock sensor connectors.

(2.0L DOHC)

18. Install the exhaust flex pipe.
19. Install the exhaust flex pipe retaining nuts to the ex-haust manifold studs and the support bracket.

Tighten

Tighten the exhaust flex pipe-to-exhaust manifold retaining nuts to 22 N•m (16 lb•ft).

Tighten

Tighten the exhaust support bracket bolts to 30 N•m (22 lb•ft).

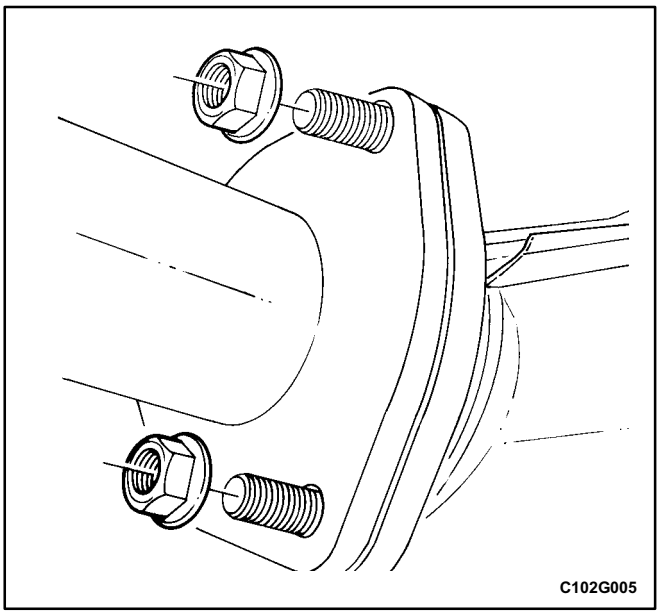

(2.2L DOHC)

20. Insert the main catalytic converter bolts into the front muffler flange.
21. Install the rubber hangers that attach the connecting pipe to the vehicle.
22. Install the nuts to secure the front muffler pipe to the main catalytic converter.

Tighten

Tighten the front muffler pipe-to-main catalytic con-verter nuts to 30 N•m (22 lb•ft).

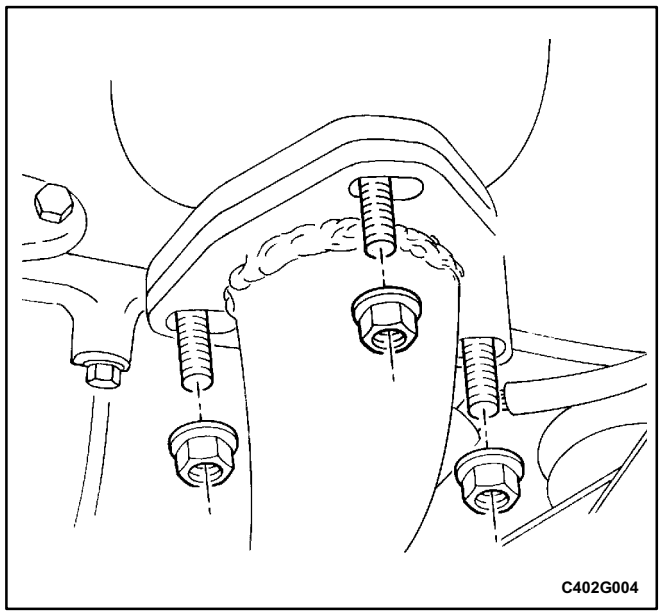

(2.2L DOHC)

23. Install the auxiliary catalytic converter lower flange bolts.

Tighten

Tighten the auxiliary catalytic converter-to-connecting pipe nuts to 40 N•m (30 lb•ft).

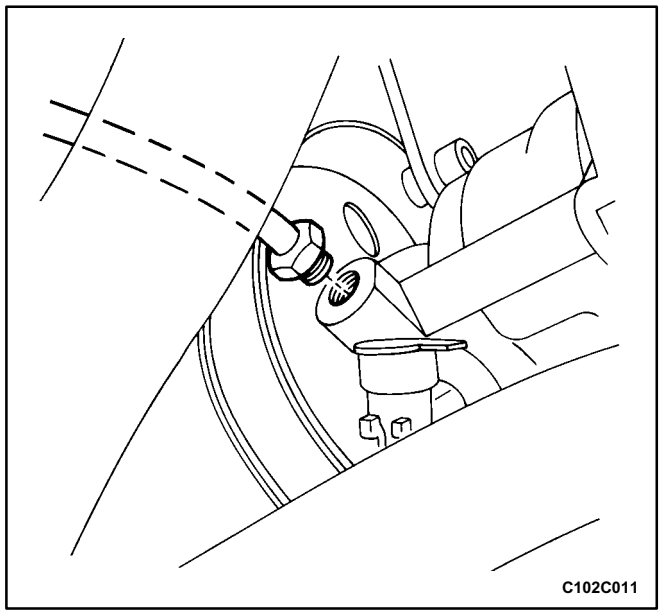

24. Install the exhaust flex pipe retaining nuts to the catalytic converter.

Tighten

Tighten the exhaust flex pipe retaining nuts to the catalytic converter to 30 N•m (22 lb•ft).

25. Connect the power steering pressure hose.
26. Connect the power steering return hose.
27. Install the A/C compressor, if equipped. Refer to *Section 7B, Manual Control Heating, Ventilation, and Air Conditioning System*.

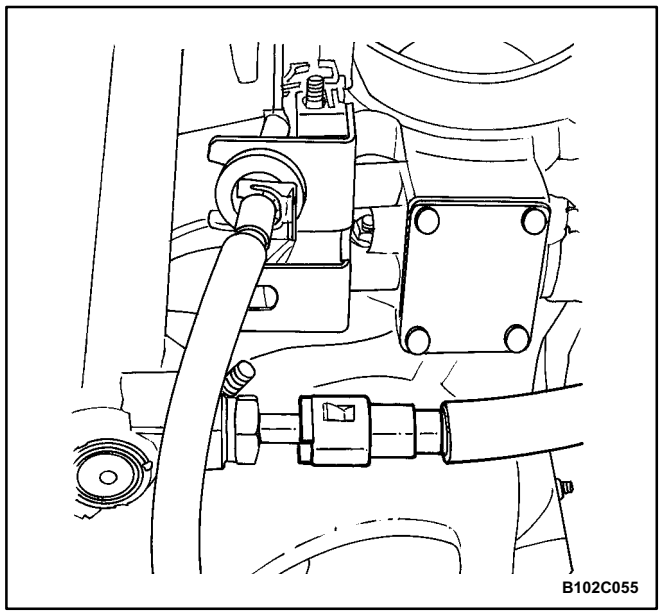

28. Install the accessory drive belt. Refer to *Section 6B, Power Steering Pump.*
29. Install the right front wheel well splash shield. Refer to *Section 9R, Body Front End.*
30. Install the right front wheel. Refer to *Section 2E, Tires and Wheels*.
31. Connect the fuel feed line to the fuel rail.
32. Connect the fuel return line to the fuel pressure regulator.
33. Install the fuel rail and injector channel cover as an assembly. Refer to *Section 1F, Engine Controls.*

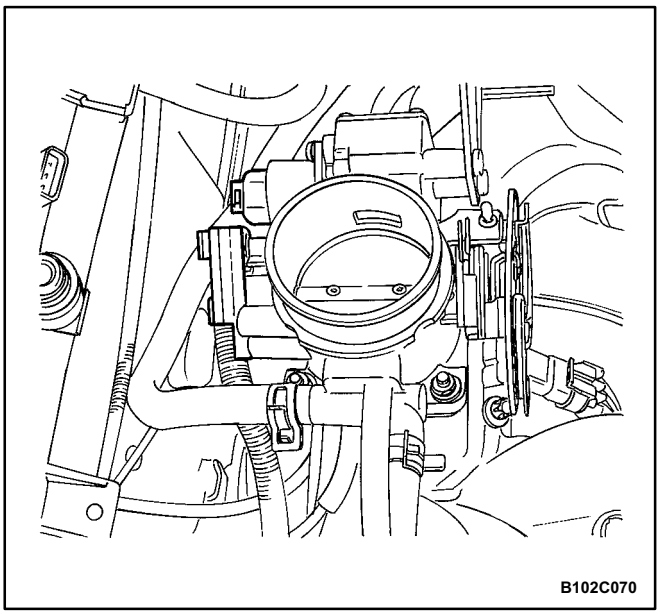

34. Connect all of the necessary vacuum lines including the brake booster vacuum hose.
35. Connect the oxygen sensor connector.
36. Connect the starter solenoid "S" terminal wire and power lead.
37. Connect the alternator voltage regulator connector.
38. Connect the CTS connector.
39. Connect the ECT sensor connector.
40. Connect the TPS connector.
41. Connect the IAC valve connector.
42. Connect the MAP sensor connector.
43. Connect the CMP sensor connector (2.2L DOHC).

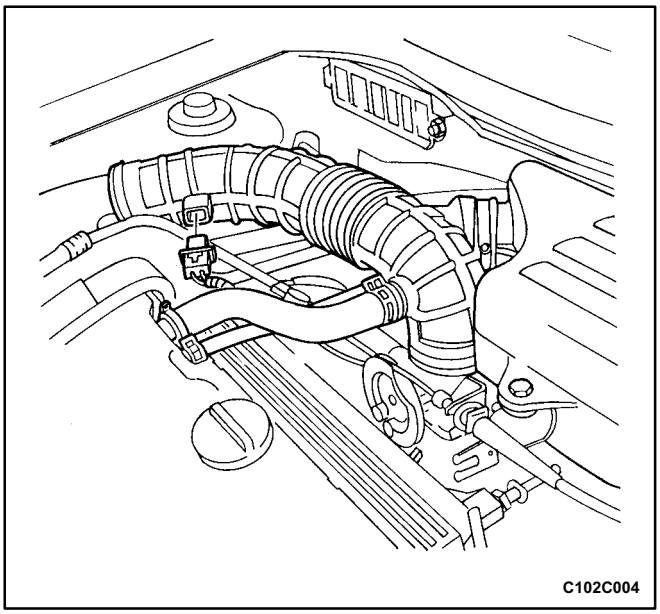

44. Connect the electrical connector at the DIS ignition coil and the ECM ground terminal.
45. Install the air intake tube.
46. Install the air filter housing and the bolts.

Tighten

Tighten the air filter housing bolts to 8 N•m (71 lb•in).

47. Connect the breather tubes to the valve cover.
48. Connect the manifold air temperature sensor con-nector.
49. Install the cooling system radiator and the engine cooling fans. Refer to *Section 1D, Engine Cooling.*
50. Install the resonator and retaining bolts.

Tighten

Tighten the resonator bolts to 8 N•m (71 lb•in).

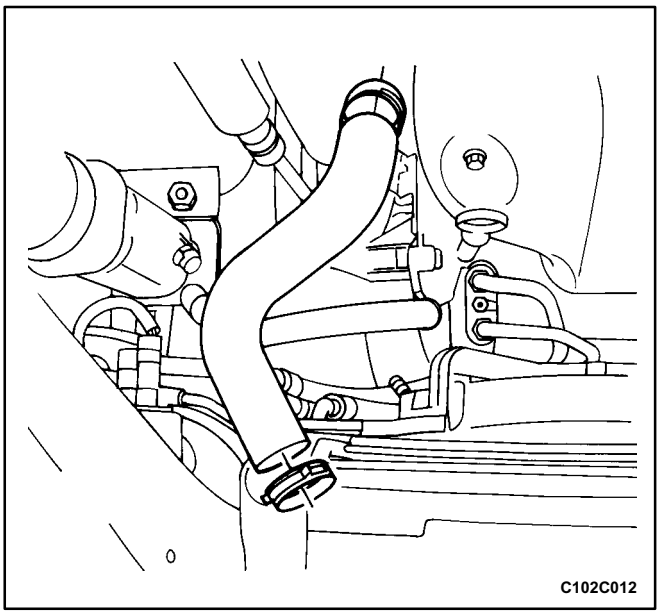

51. Connect the lower radiator hose to the coolant pipe.
52. Connect the upper radiator hose to the thermostat housing.
53. Connect the heater inlet hose to the cylinder head.
54. Connect the heater outlet hose to the coolant pipe.
55. Connect the coolant surge tank hose to the coolant pipe.
56. Connect the coolant hose to the throttle body.

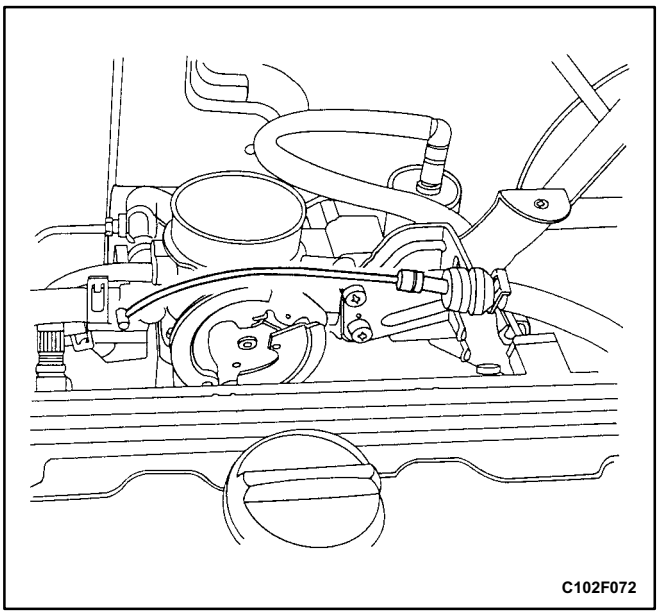

57. Connect the throttle cable to the throttle body and the intake manifold bracket.
58. Install the fuel pump fuse.
59. Connect the negative battery cable.
60. Refill the engine crankcase with engine oil.
61. Refill the engine coolant system. Refer to *Section 1D, Engine Cooling.*
62. Fill and bleed the power steering system. Refer to *Section 6A, Power Steering System.*
63. Refill the A/C refrigerant system, if equipped. Refer to *Section 7B, Manual Control Heating, Ventilation, and Air Conditioning System*.
64. Install the hood. Refer to *Section 9R, Body Front End*.

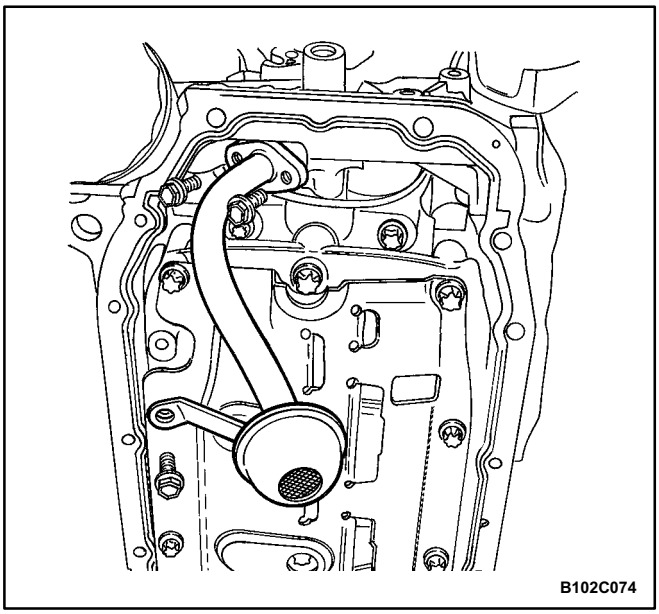

PISTONS AND CONNECTING RODS

Tools Required

J-8037 Universal Piston ring Compressor
J-8087 Cylinder Bore Check Gauge
KM-427 Piston Pin Service Set
KM-470-B Angular Torque Gauge

Removal Procedure

1. Remove the cylinder head with the intake manifold and exhaust manifold attached. Refer to "Cylinder Head and Gasket" in this section.
2. Remove the oil pan. Refer to "Oil Pan" in this section.
3. Remove the oil pump/pickup tube bolts.
4. Remove the oil pump/pickup tube.
5. Remove the engine block lower support and the splash shield bolts.
6. Remove the engine block lower support and the splash shield.

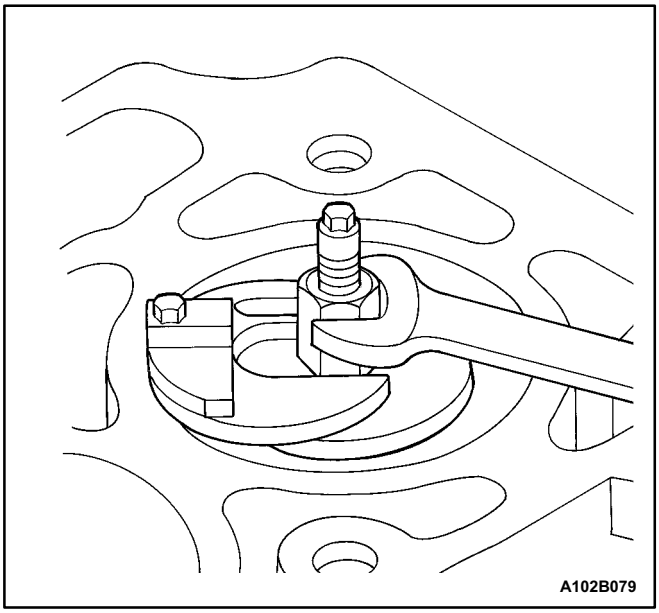

7. Move the piston to the bottom of the piston stroke.
8. Mark the connecting rod cap for position.
9. Remove the connecting rod cap bolts.
10. Remove the connecting rod cap and the lower con-necting rod bearing.
11. Remove the upper piston connecting rod bearing.
12. Ridge ream the cylinder wall.

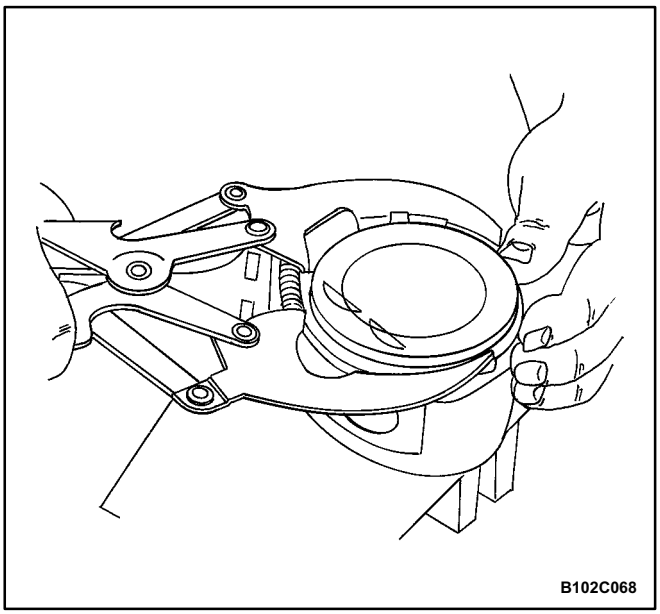

Caution: Use care when handling the piston. Worn piston rings are sharp and may cause injury.

13. Remove the piston.
14. Use a piston ring expander tool to expand the piston rings.
15. Remove the piston rings.

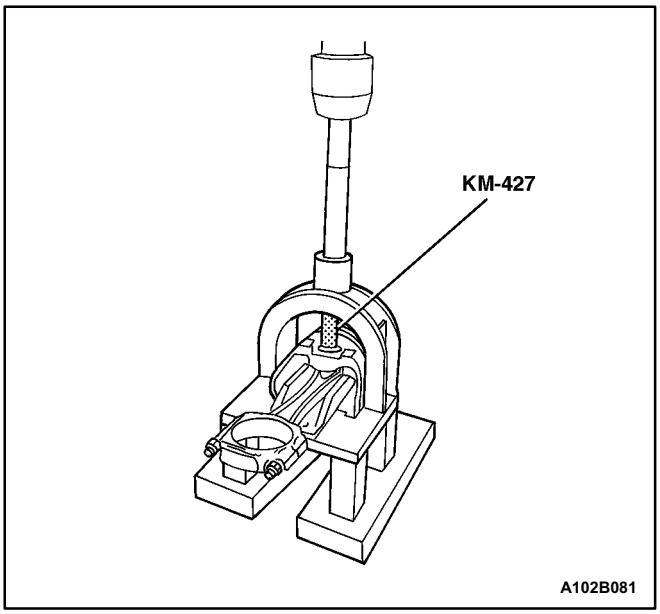

16. Remove the piston pin from the piston and con-necting rod assembly using the piston pin service set KM-427.
17. Separate the piston from the connecting rod.

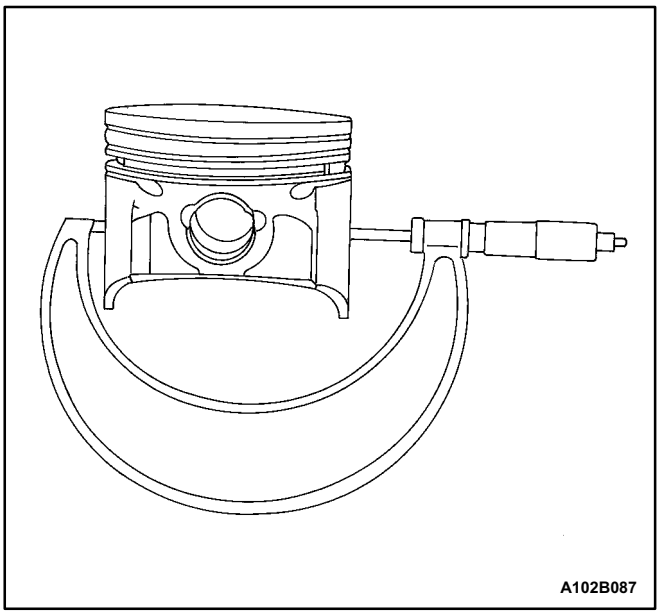

Inspection Procedure

1. Inspect the connecting rod for bending or twisting. If the connecting rod is bent or twisted, replace the connecting rod.
2. Inspect the connecting rod bearings.
3. Inspect the connecting rod lower end for wear.
4. Inspect the connecting rod upper end for scoring.
5. Inspect the crankshaft rod bearing journal for wear. Refer to Engine Specifications" in this section.
6. Inspect the piston for scoring, cracks, and wear.
7. Inspect the piston for taper using a micrometer.

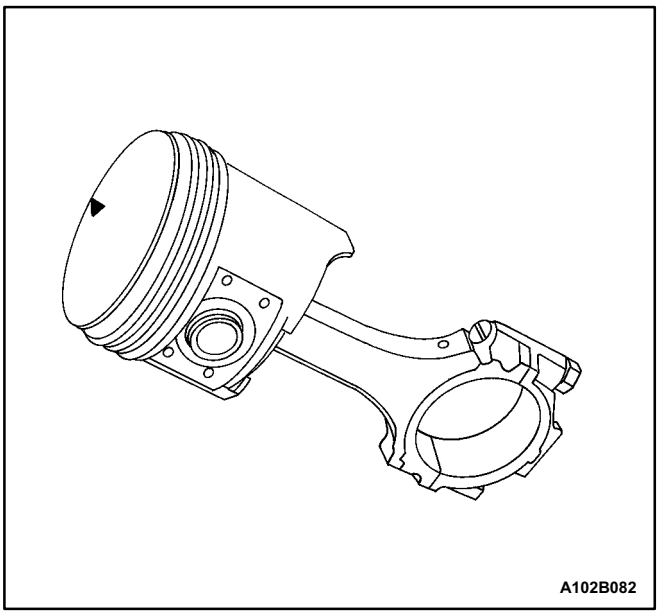

8. Inspect the piston for fit to the connecting rod.

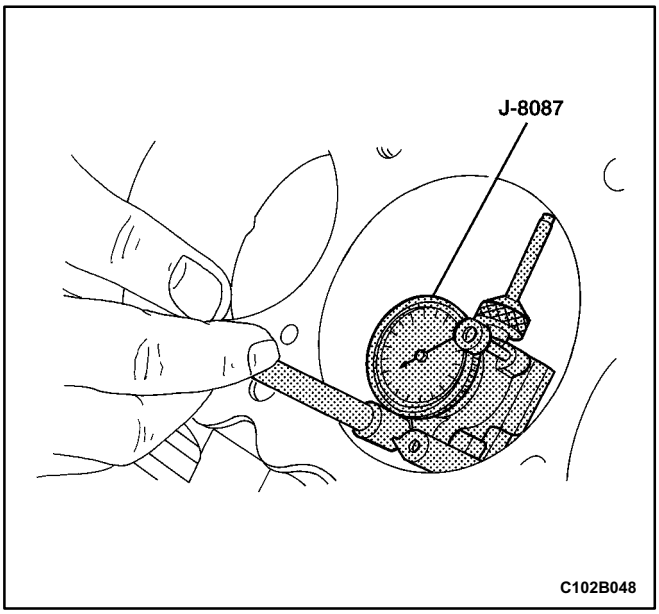

9. Inspect the engine block deck surface for flatness using a straight edge and a feeler gauge. Refer to "Engine Specifications" in this section.
10. Inspect the bearing bore for concentricity and align-ment using cylinder bore check gauge J-8087. Refer to "Engine Specifications" in this section. If the bearing bore is beyond specifications, replace the engine block.
11. Inspect the engine block cylinder bore for wear, runout, ridging and taper using a bore gauge. Refer to "Engine Specifications" in this section.
12. Inspect the engine block cylinder bore for glazing. Lightly hone the cylinder bore as necessary.

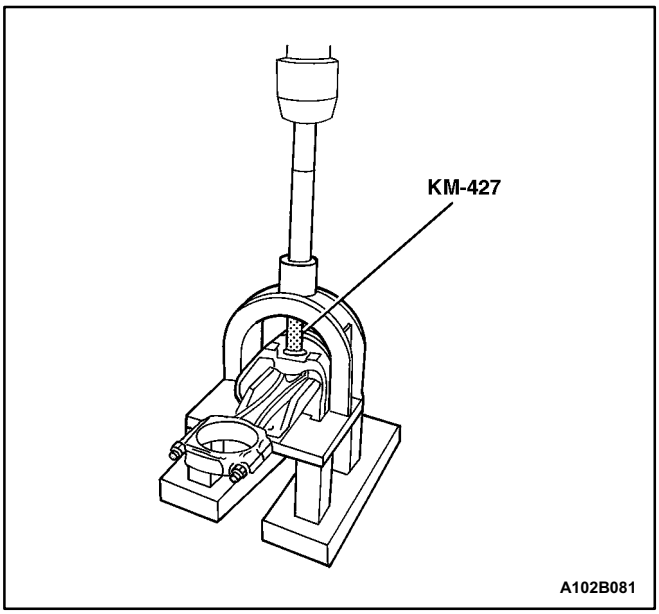

Installation Procedure

Important: For ease of installation of the piston pin, the connecting rod should be heated to 280°C. Heat the upper connecting rod only. Use commercial ther-mocolor material to determine the correct temperature. When the thermocolor material changes from black to green, the temperature is correct for installation.

1. Align the notch on the piston and connecting rod so that the proper sides will be facing the front of the en-gine.
2. Install the piston pin guide through the piston and the connecting rod.
3. Coat the piston pin with clean oil.
4. Install the piston pin into the opposite side of the pis-ton.
5. Install the piston pin into the piston and connecting rod assembly using the piston pin service set KM-427.

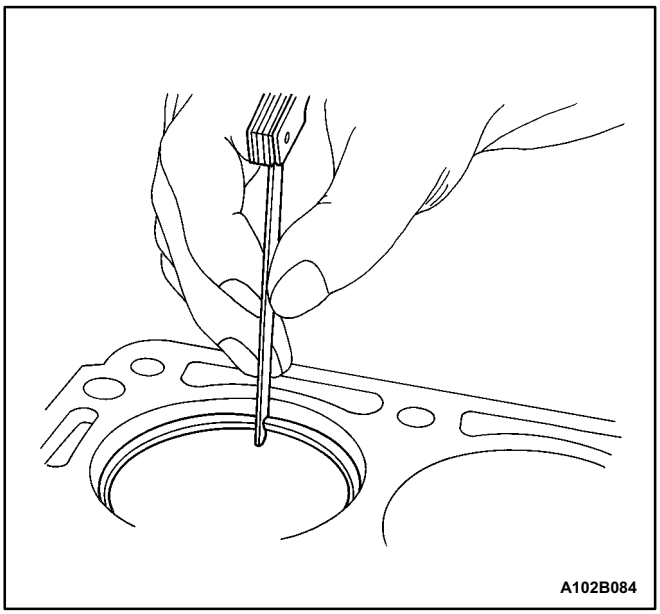

6. Select a set of new piston rings.
7. Measure the piston ring gap using a feeler gauge. Refer to "Engine Specifications" in this section.
8. Increase the piston ring gap by carefully filing off ex-cess material if the piston ring gap is below specifi-cations.

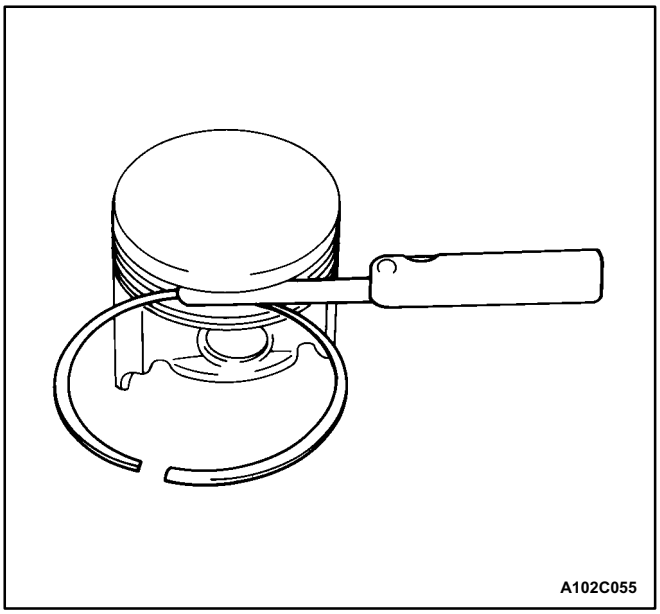

9. Measure the piston ring side clearance using a feeler gauge. Refer to "Engine Specifications" in this section.
10. If the piston ring is too thick, try another piston ring.
11. If no piston ring can be found that fits to specifica-tions, the piston ring may be ground to size with emery paper placed on a sheet of glass.

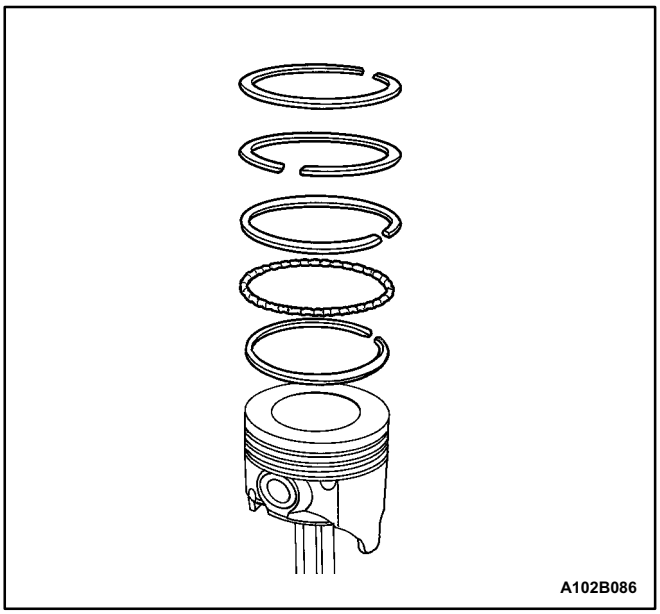

12. Install a piston oil ring, the expander, then the sec-ond piston oil ring to the bottom ring groove of the piston.
13. Install the second compression ring to the middle ring groove of the piston.
14. Install the top compression ring to the top ring groove of the piston.

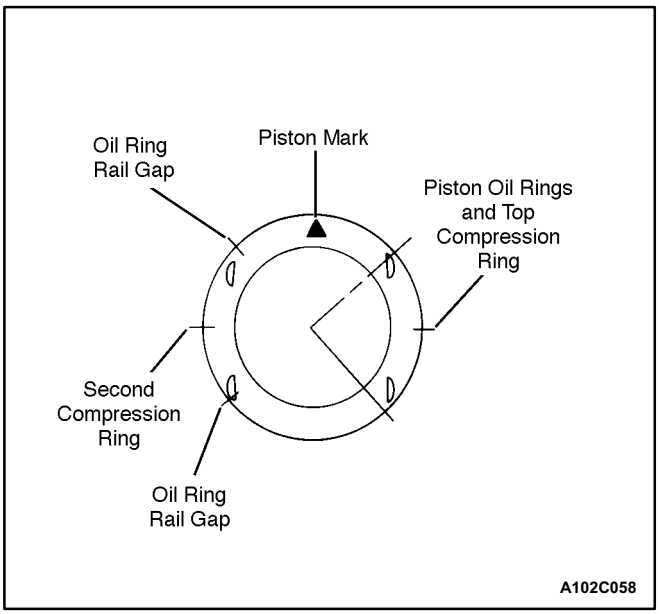

15. Use a piston ring expander to install the piston rings. Do not expand the piston rings beyond the expan-sion necessary for installation.
16. Stagger the piston oil rings, the oil ring rail gaps, the second compression ring, and the top compression ring in relation to the notch on the top of the piston.

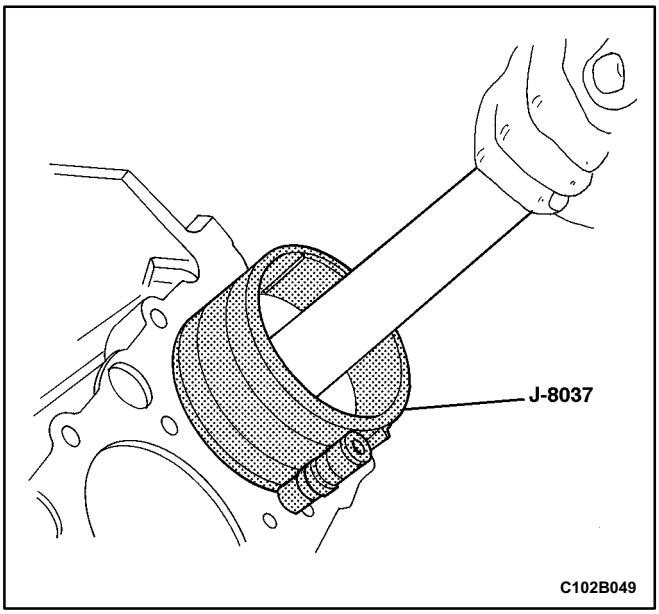

17. Lubricate the cylinder wall and the piston rings with clean engine oil.
18. Install the piston using the universal piston ring compressor J-8037 and a wood handle. Guide the lower connecting rod end to prevent damaging the crankshaft journal.
19. Install the connecting rod cap and bearings. Refer to "Crankshaft Bearings and Connecting Rod Bearings - Gauging Plastic" in this section.

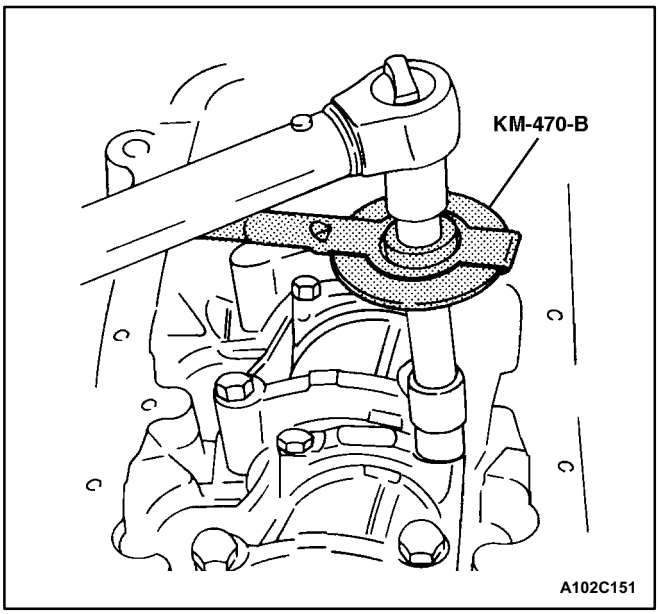

20. Install the connecting rod cap bearing bolts.

Tighten

Tighten the connecting rod cap bearing bolts to 35 N•m (26 lb•ft). Using the angular torque gauge KM470B, tighten the bolts one turn of 45 degrees plus 15 degrees.

21. Install the engine block lower support bracket/splash shield bolts.

Tighten

Tighten the engine block lower support bracket/splash shield bolts to 35 N•m (26 lb•ft).

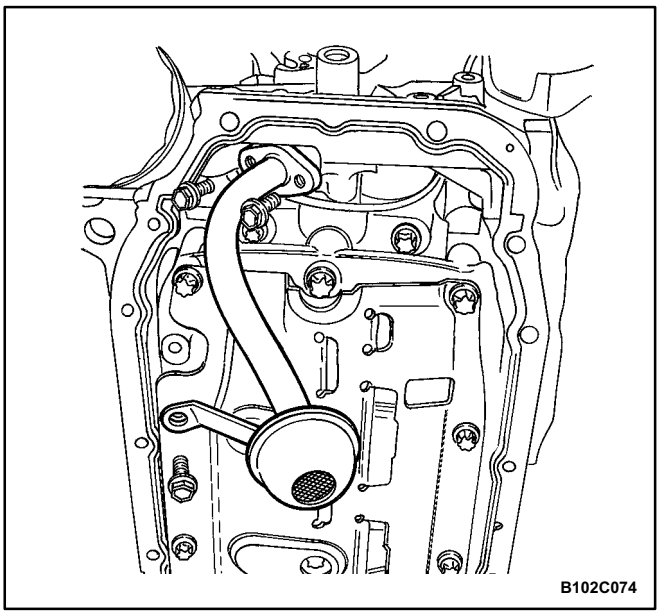

22. Install the oil pump/pickup tube.
23. Install the oil pump/pickup tube bolts.

Tighten

Tighten the oil pump/pickup tube bolts to 8 N•m (71 lb•in).

24. Install the oil pan. Refer to "Oil Pan" in this section.
25. Install the cylinder head with the intake manifold and exhaust manifold attached. Refer to "Cylinder Head and Gasket" in this section.

UNIT REPAIR

CYLINDER HEAD AND VALVE TRAIN COMPONENTS

Tools Required

KM-571-B Gauge
KM-340-0 Cutter Set
  KM-340-7 Guide Drift
  KM-340-13 Cutters
  KM-340-26 Cutters
KM-348 Valve Spring Compressor
KM-653 Adapter
KM-805 Reamer

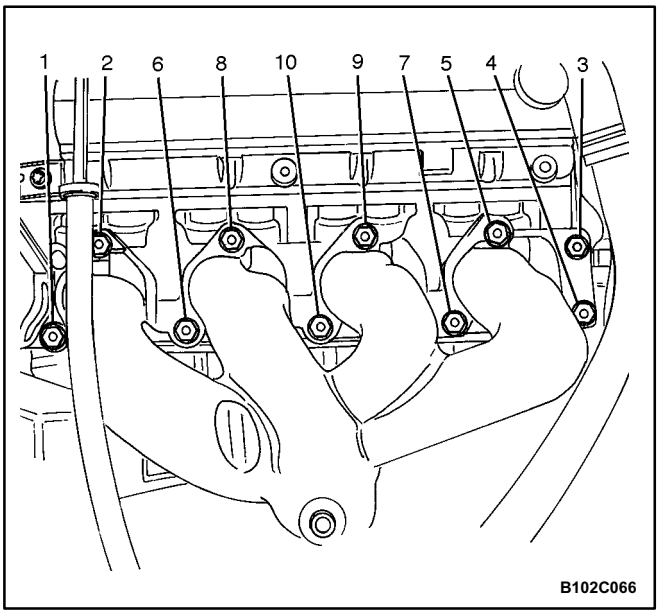

Disassembly Procedure

1. Remove the cylinder head with the intake manifold and the exhaust manifold attached. Refer to "Cylin-der Head and Gasket" in this section.
2. Remove the coolant temperature sensor.
3. Remove the exhaust manifold heat shield bolts.
4. Remove the exhaust manifold heat shield.
5. Remove the exhaust manifold retaining nuts in the sequence shown.
6. Remove the exhaust manifold.
7. Remove the exhaust manifold gasket.
8. Remove the exhaust manifold studs.

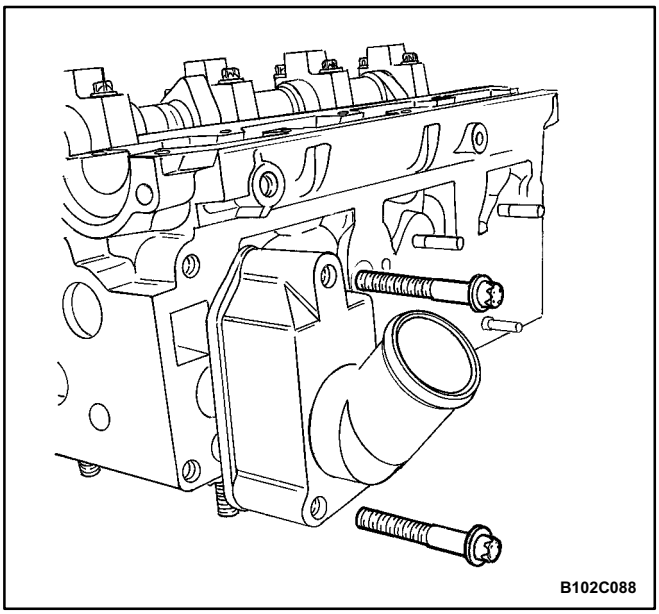

9. Remove the thermostat housing mounting bolts.
10. Remove the thermostat housing assembly.
11. Remove the fuel rail assembly. Refer to *Section 1F, Engine Controls (2.0L DOHC)*.
12. Remove the coolant bypass housing mounting bolts and the housing.

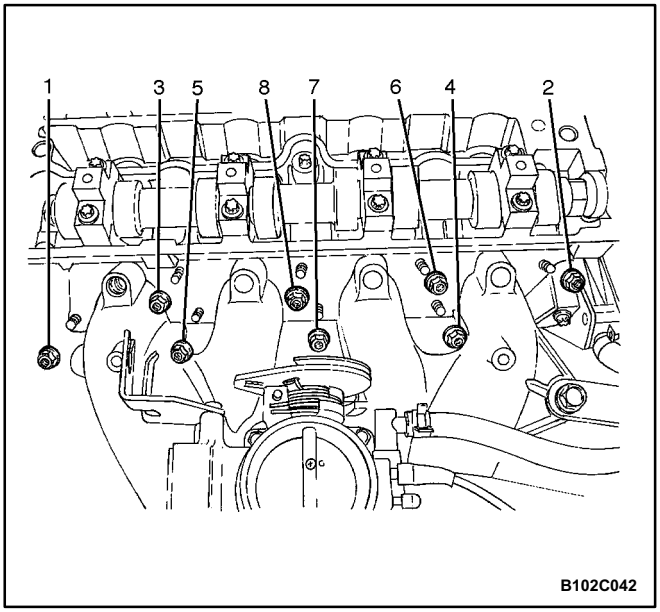

13. Remove the intake manifold retaining nuts and re-taining bolt in the sequence shown.
14. Remove the intake manifold.
15. Remove the intake manifold gasket.

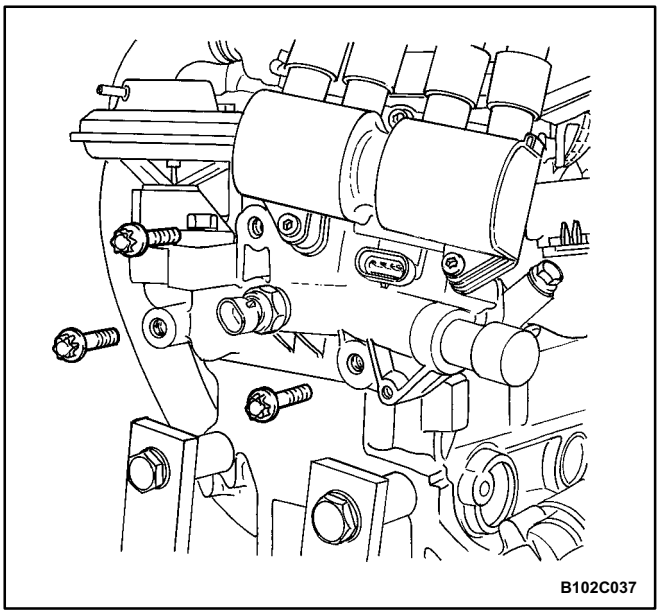

16. Remove the DIS ignition coil and EGR mounting bracket bolts.
17. Remove the DIS ignition coil and EGR mounting bracket and ignition wires.
18. Remove the intake manifold studs.
19. Remove the spark plugs.

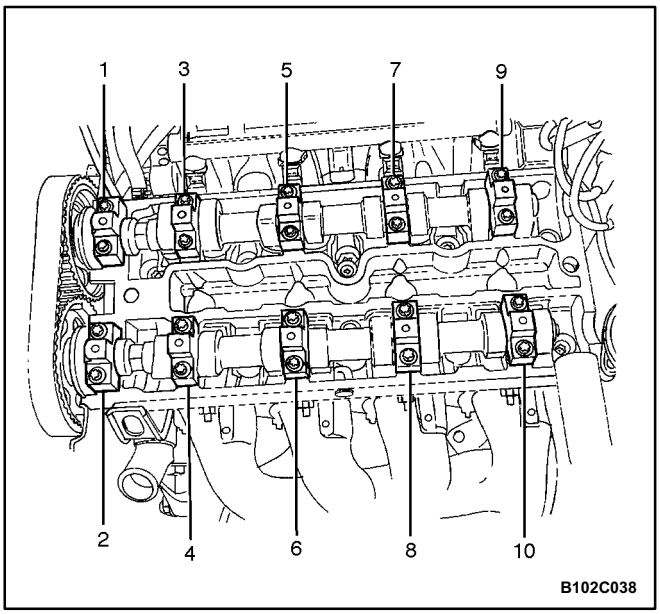

20. Remove the camshaft bearing cap bolts gradually and in the sequence shown for each camshaft cap.

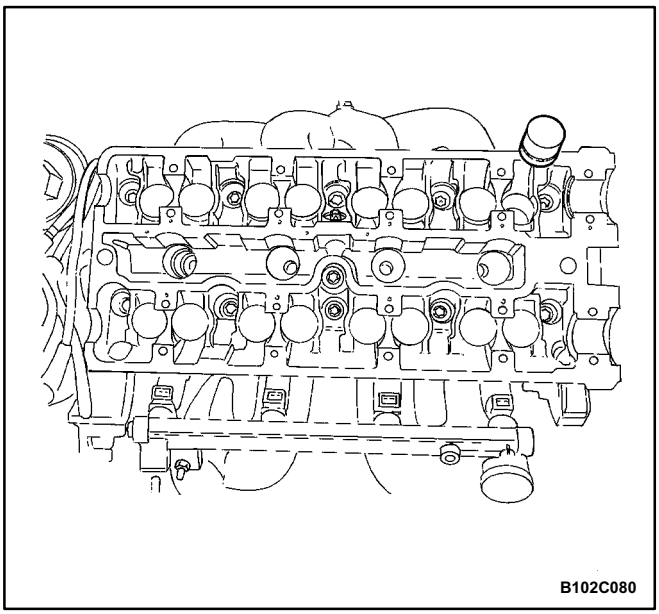

21. Remove the intake camshaft caps. Maintain the correct positions for installation.
22. Remove the intake camshaft.
23. Remove the intake valve lash adjusters.
24. Remove the exhaust camshaft caps. Maintain the correct positions for installation.
25. Remove the exhaust camshaft.
26. Remove the exhaust valve lash adjusters.

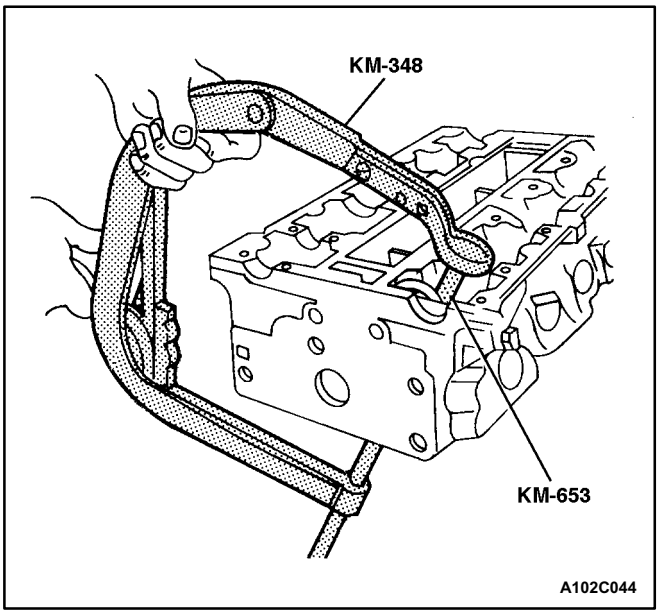

27. Compress the valve springs with the valve spring compressor KM-348 and the adapter KM-653.
28. Remove the valve retainers.
29. Remove the valve spring compressor KM-348 and the adapter KM-653.
30. Remove the valve spring caps.
31. Remove the valve springs. Maintain the original position of the valve springs for installation.

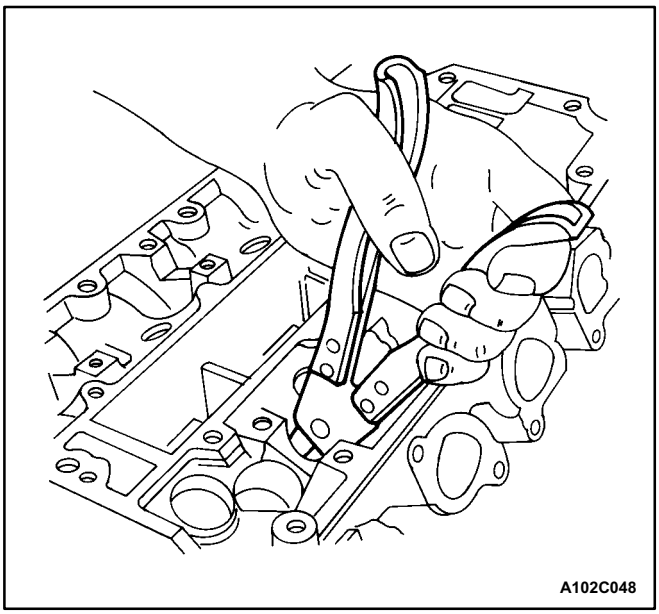

32. Remove the valves. Maintain the original position of the valves for installation.
33. Remove the valve stem seals.

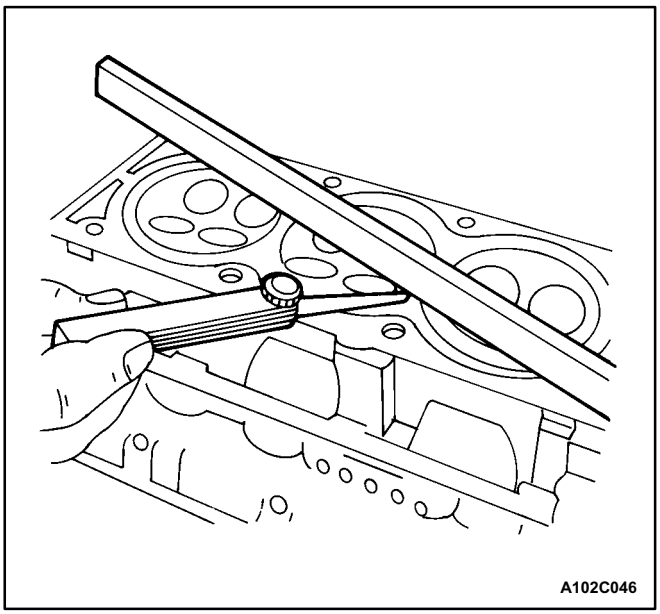

Cylinder Head Inspection

1. Clean the sealing surfaces.
2. Inspect the cylinder head gasket and mating surfaces for leaks, corrosion and blow-by.
3. Inspect the cylinder head for cracks.
4. Inspect the length and width of the cylinder head us-ing a feeler gauge and a straight edge.
5. Check the sealing surfaces for deformation and warpage. The cylinder head sealing surfaces must be flat within 0.025 mm (0.001 inch) maximum.

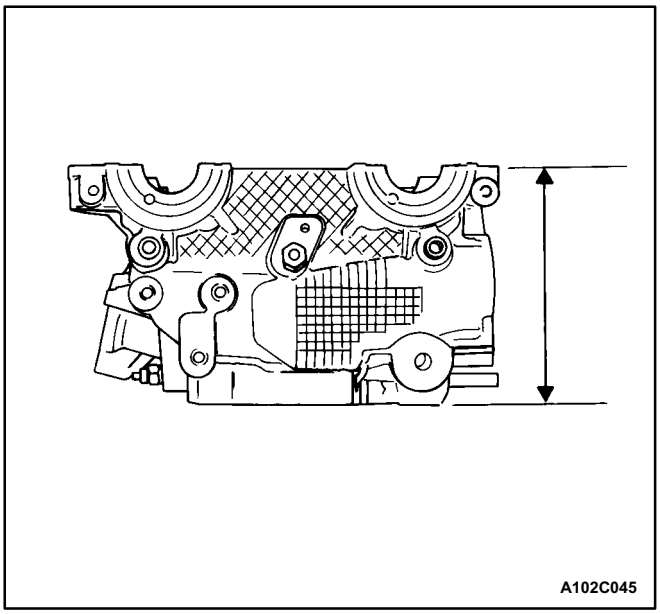

6. Measure the height of the cylinder head from sealing surface to sealing surface. The cylinder head height should be 133.975 to 134.025 mm (5.274 to 5.276 inches). If the cylinder head height is less than 133.9 mm (5.271 inches), replace the cylinder head.
7. Inspect all threaded holes for damage.
8. Inspect valve seats for excessive wear and burned spots.

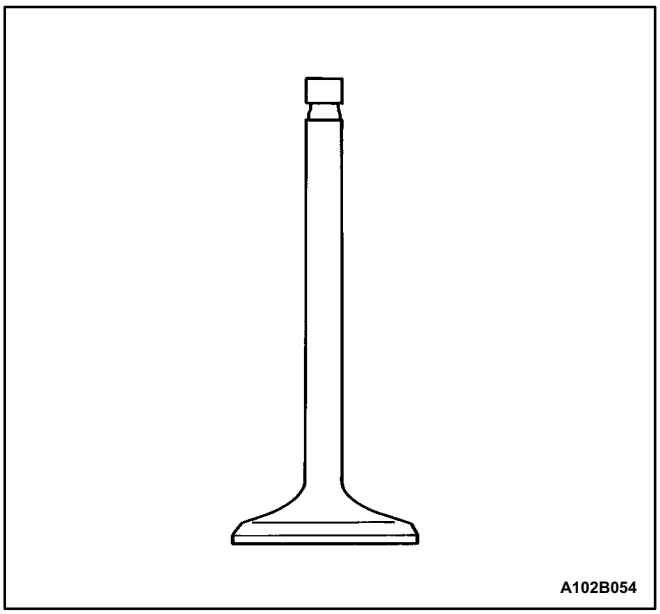

Valve Inspection

1. Inspect the valve stem tip for wear.
2. Inspect the valve retainer grooves and the oil seal grooves for chips and wear.
3. Inspect the valves for burns or cracks.
4. Inspect the valve stem for burrs and scratches.
5. Inspect the valve stem. The valve stem must be straight.
6. Inspect the valve face for grooving. If the groove is so deep that refacing the valve would result in a sharp edge, replace the valve.
7. Inspect the valve spring. If the valve spring ends are not parallel, replace the valve spring.
8. Inspect the valve spring seating surface of the valve rotators for wear or gouges. Replace as required.

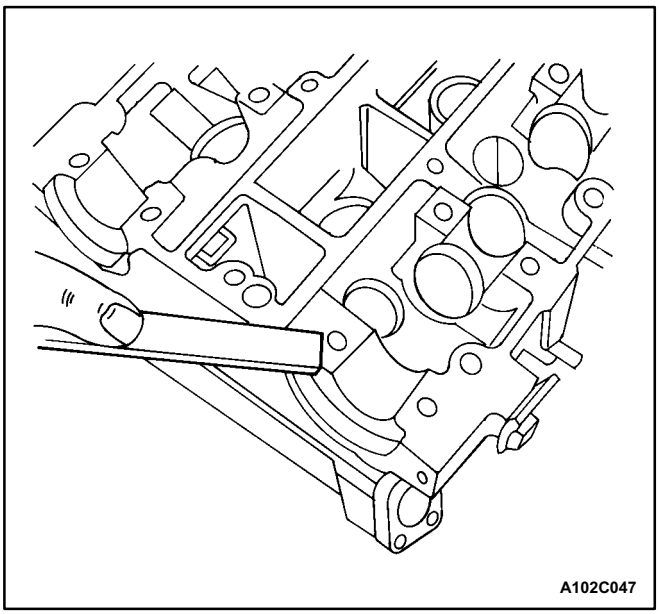

Cleaning Procedure

1. Clean the cylinder head.
2. Clean the valve guides.
3. Clean all of the threaded holes.
4. Clean the valves of carbon, oil and varnish.

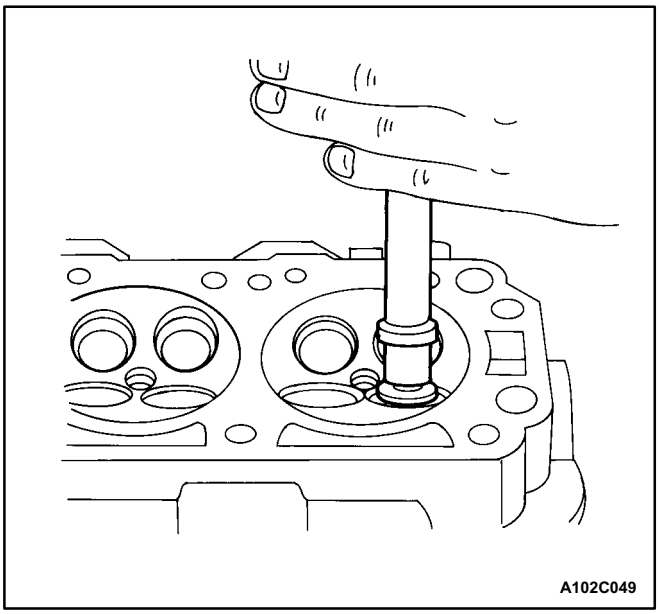

Cylinder Head Overhaul

Valve Grind-in

1. Lubricate the valve seat using a fine-grained paste.
2. Lift the valve rhythmically from the seat with a com-mercially available valve grinding tool in order to dis-tribute the paste.

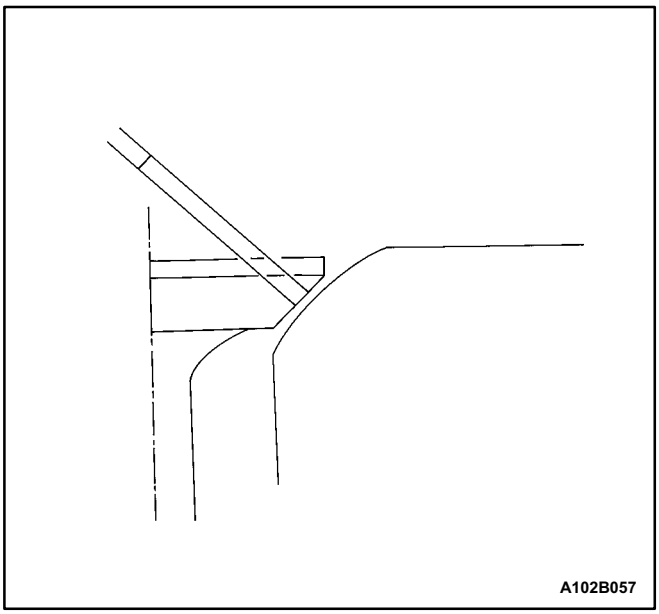

3. Check the contact pattern on the valve head and in the cylinder head.
4. Clean the valves, the valve guides, and the cylinder head.

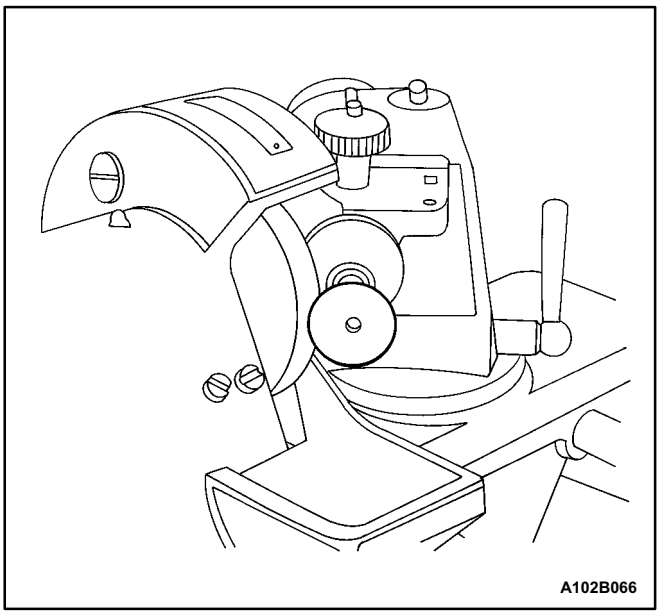

Valve Grind

1. Ensure that there are no crater line burns on the valve cone.
2. The valve may be reground only two times. Do not grind the valve stem end.
3. Ensure that the angle at the valve face is 45 degrees.
4. Inspect the assembly height of the intake valves and the exhaust valves.

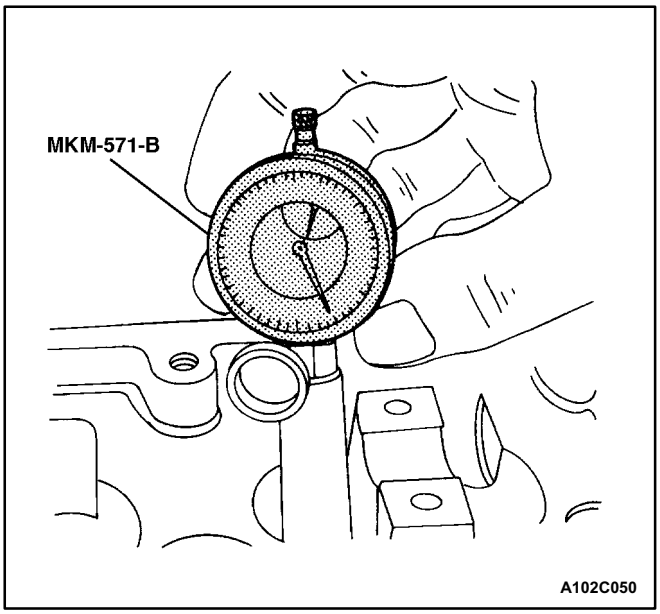

Valve Guide - Ream

1. Measure the diameter of the valve guide using gauge MKM-571-B and a commercially available inside micrometer.

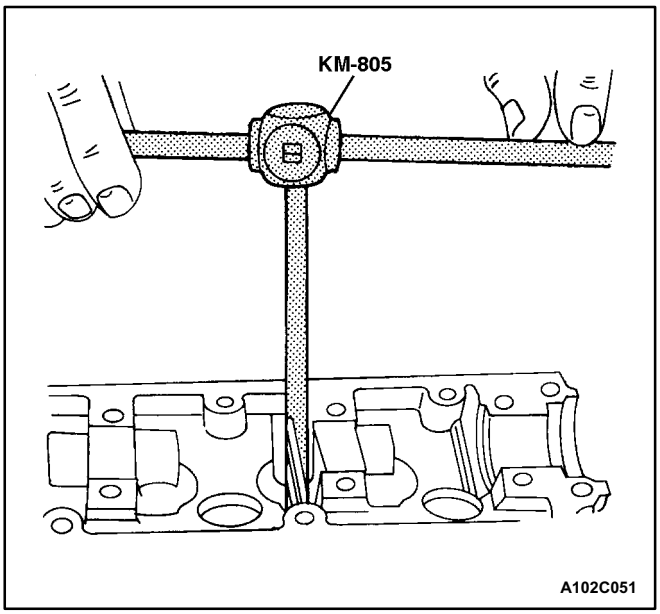

Important: Valve oversizes may already have been fitted in production.

2. An oversize service code is on the valve guide and the valve stem end. The following table gives the correct size, reamer, and production code for each service.

Size	Reamer	Production Code	Service Code
Normal	□	□	K
0.075	KM805	1	K1
0.150		2	K2

3. Ream the valve guide from the upper side of the cyl-inder head to the next oversize.
4. After reaming, cross out the code and emboss the valve guide with the new code.

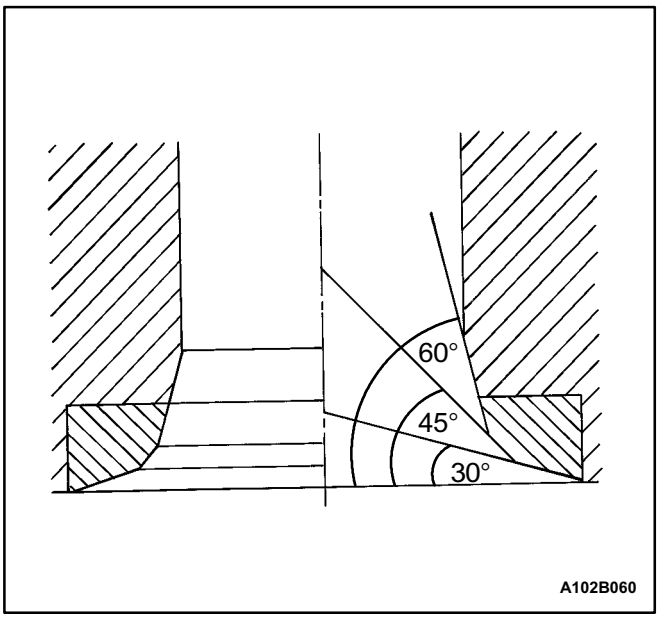

Valve Seat - Cut

1. Place the cylinder head on wooden blocks.
2. Cut the intake and the exhaust valve seats using the guide drift KM-340-7 as follows:
   - Valve seat - A 45 degree surface using the cutter KM-340-13.
   - Upper correction angle - A 30 degree surface us-ing the cutter KM-340-13.
   - Lower correction angle - A 60 degree surface us-ing the cutter KM-340-26.
3. Clean the chippings from the cylinder head.
4. Inspect the dimension for the valve seat width.
   - Intake: 1.2 to 1.4 mm (0.047 to 0.055 inch).
   - Exhaust: 1.4 to 1.8 mm (0.055 to 0.070 inch).
5. Inspect the assembly height of the intake valves and the exhaust valves. If the dimension is exceeded, install new valves. Inspect the assembly height of the intake valves and the exhaust valves again. If the valve assembly height is still too large despite re-placing the valves, replace the cylinder head.

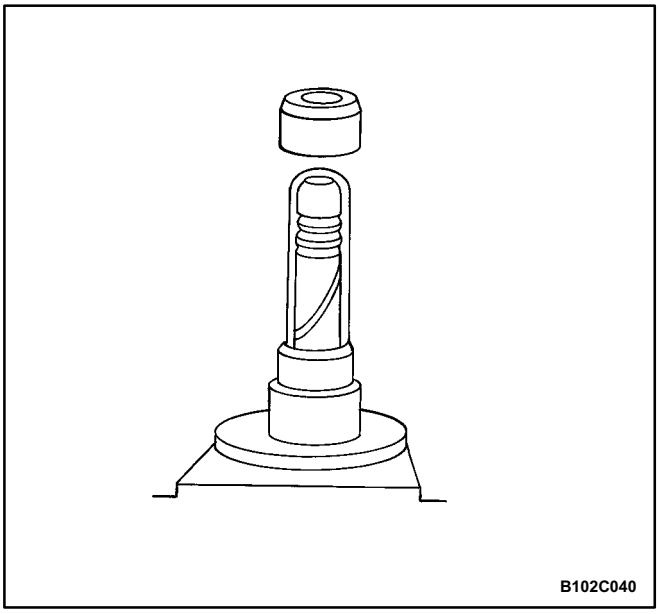

Assembly Procedure

1. Coat the valve stems with engine oil.
2. Insert the valves in the cylinder head in their original positions.
3. Insert the valve spring seats.
4. Push the accompanying assembly sleeve onto the valve stem.
5. Insert the new valve stem seat.
6. Carefully drive the valve stem seal onto the stop with light taps.
7. Install the valve springs in their original positions.
8. Install the valve spring caps.

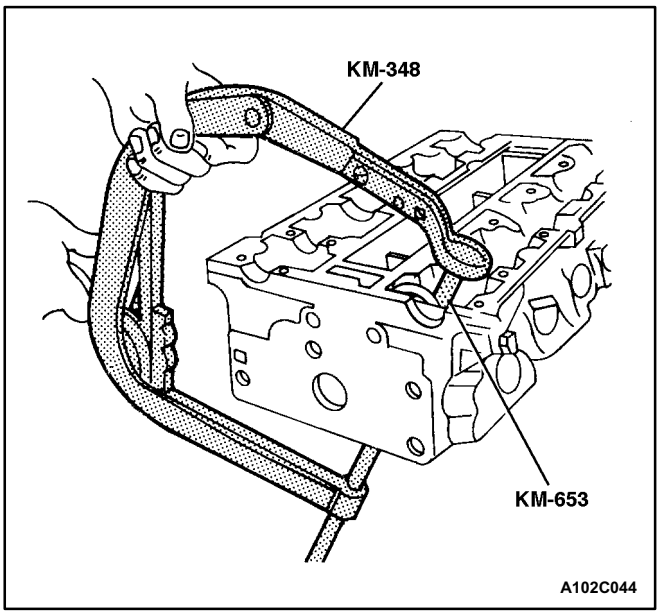

9. Compress the valve springs with the valve spring compressor KM-348 and adapter KM-653.
10. Install the valve retainers.
11. Remove the valve spring compressor KM-348 and adapter KM-653.

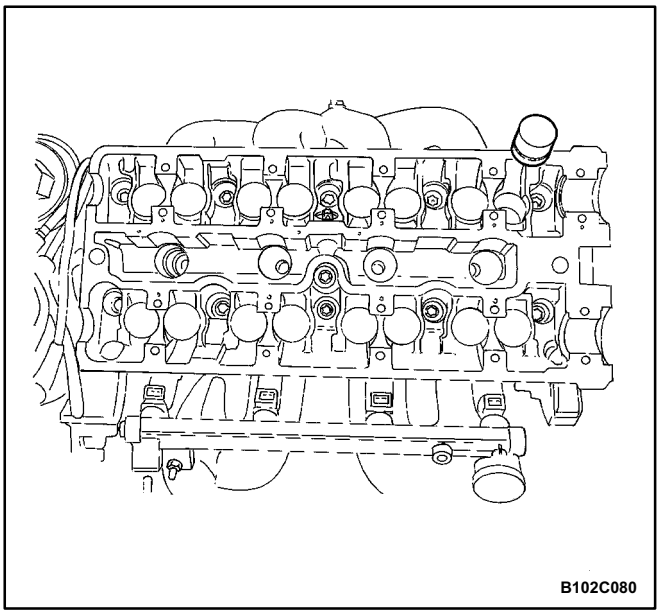

12. Lubricate the valve lash adjusters with engine oil.
13. Install the valve lash adjusters.

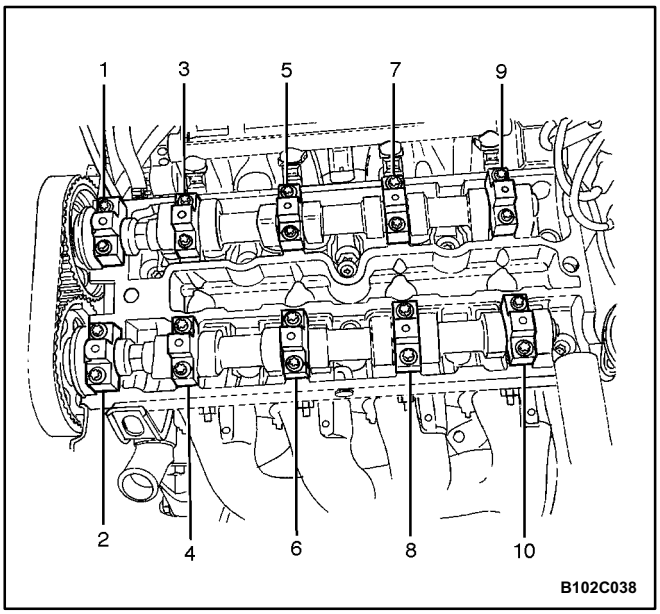

14. Install the intake camshaft.
15. Install the intake camshaft bearing caps in their original positions.
16. Install the exhaust camshaft.
17. Install the exhaust camshaft bearing caps in their original positions.
18. Install the camshaft bearing cap bolts.
19. Tighten the camshaft bearing cap bolts gradually and in the sequence shown for each camshaft cap.

Tighten

Tighten the camshaft bearing cap bolts to 8 N•m (71 lb•in).

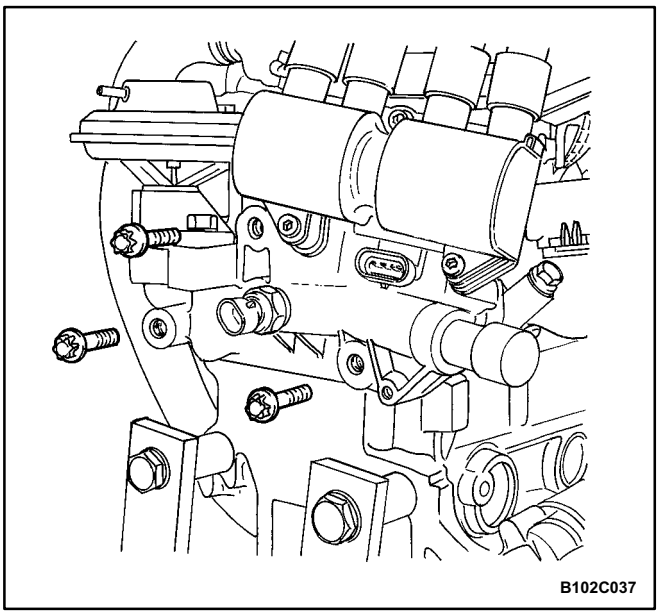

20. Install the spark plugs.

Tighten

Tighten the spark plugs to 20 N•m (15 lb•ft).

21. Install the DIS ignition coil and EGR mounting bracket and bolt.
    Tighten the DIS ignition coil and EGR mounting bracket bolts to 25 N.m (18 lb•ft).

22. Install the DIS ignition coil and EGR.

Tighten

Tighten the DIS ignition coil and EGR 10 N•m (89 lb•in).

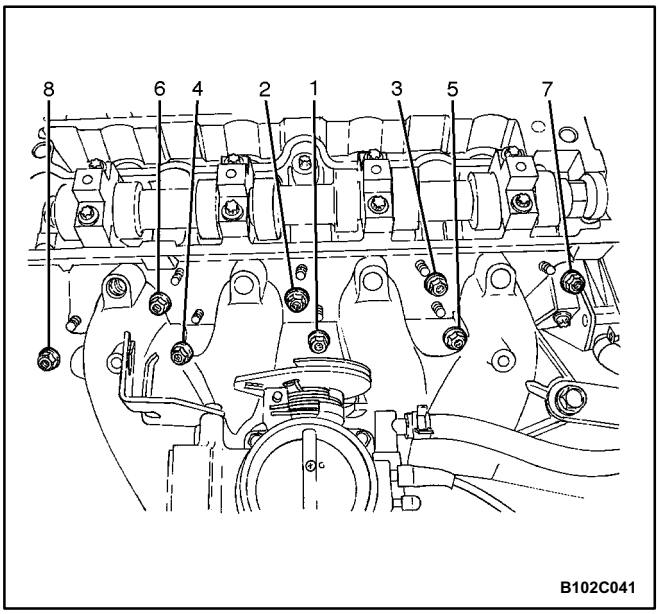

23. Install the intake manifold studs.
24. Install the intake manifold gasket.
25. Install the intake manifold.
26. Install the intake manifold retaining nuts and retain-ing bolt in the sequence shown.

Tighten

Tighten the intake manifold retaining nuts and retain-ing bolt to 22 N•m (16 lb•ft).

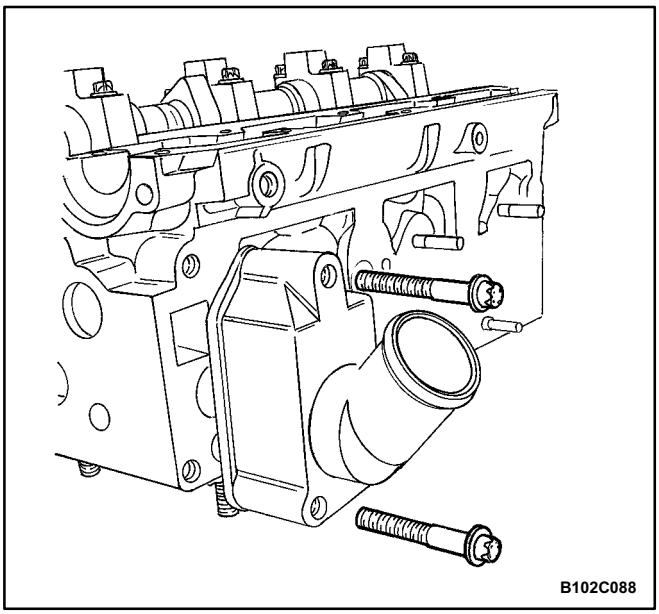

27. Install the fuel rail assembly. Refer to *Section 1F, Engine Controls (2.0L DOHC).*
28. Install the thermostat housing assembly.
29. Install the thermostat housing mounting bolts.

Tighten

Tighten the thermostat housing mounting bolts to 15 N•m (11 lb•ft).

30. Install the coolant bypass housing bolts.

Tighten

Tighten the coolant bypass housing bolts to 15 N•m (11 lb•ft).

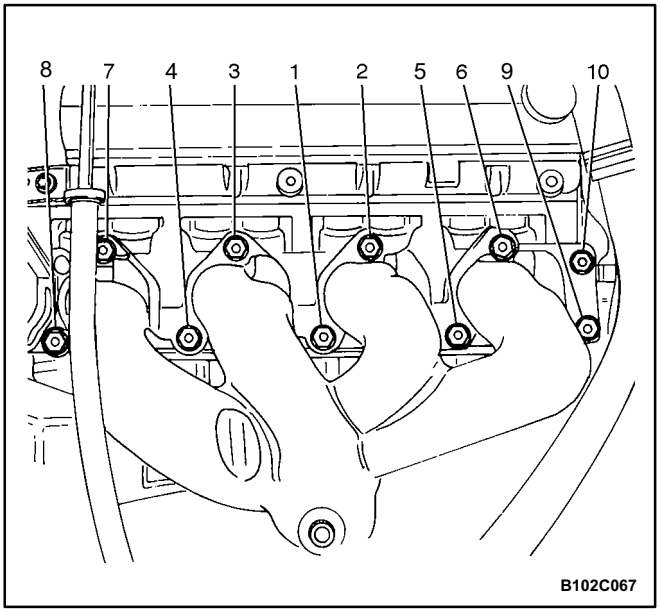

31. Install the exhaust manifold studs.
32. Install the exhaust manifold gasket.
33. Install the exhaust manifold.
34. Install the exhaust manifold retaining nuts in the se-quence shown.

Tighten

Tighten the exhaust manifold retaining nuts to 15 N•m (11 lb•ft).

35. Install the exhaust manifold heat shield.
36. Install the exhaust manifold heat shield bolts.

Tighten

Tighten the exhaust manifold heat shield bolts to 8 N•m (71 lb•in).

37. Install the cylinder head with the intake manifold and the exhaust manifold attached. Refer to Cylinder Head and Gasket" in this section.

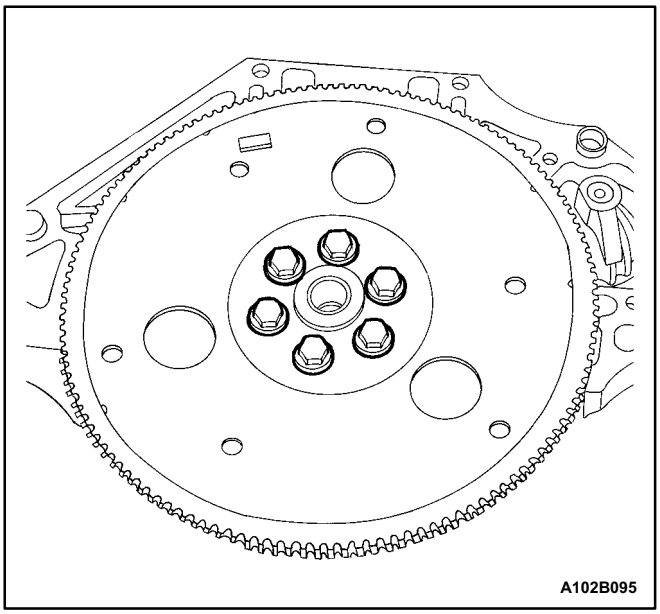

CRANKSHAFT

Tools Required

KM-412 Engine Overhaul Stand

KM-470-B Angular Torque Gauge

J-36972 Crankshaft Rear Oil Seal Installer (or KM-635)

Notice: Take extreme care to prevent any scratches, nicks, or damage to the camshafts.

Disassembly Procedure

1. Remove the engine. Refer to ``Engine" in this sec-tion.
2. Remove the flywheel or flexible plate bolts.
3. Remove the flywheel or the flexible plate.

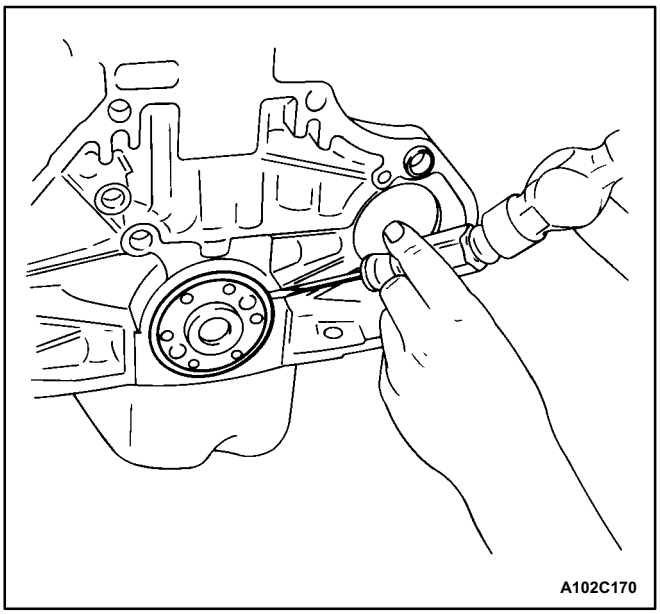

4. Remove the crankshaft rear oil seal.
5. Mount the engine assembly on the engine overhaul stand KM-412.

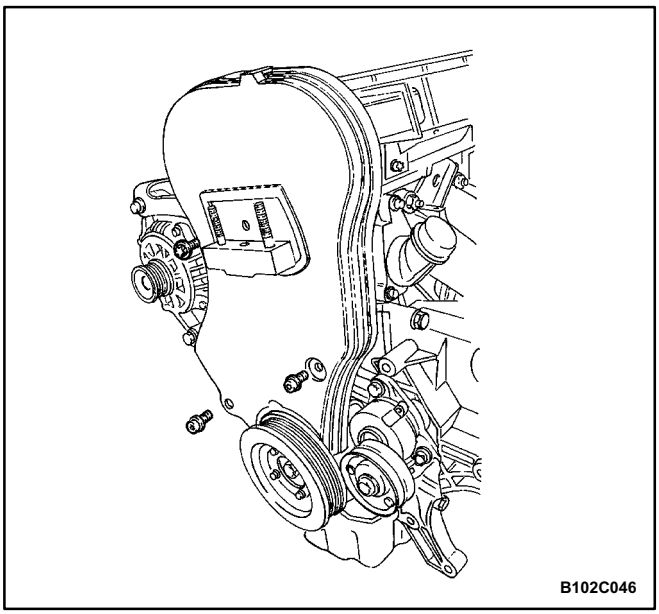

6. Remove the front timing belt cover bolts.
7. Remove the front timing belt cover.
8. Remove the crankshaft pulley bolts.
9. Remove the crankshaft pulley.

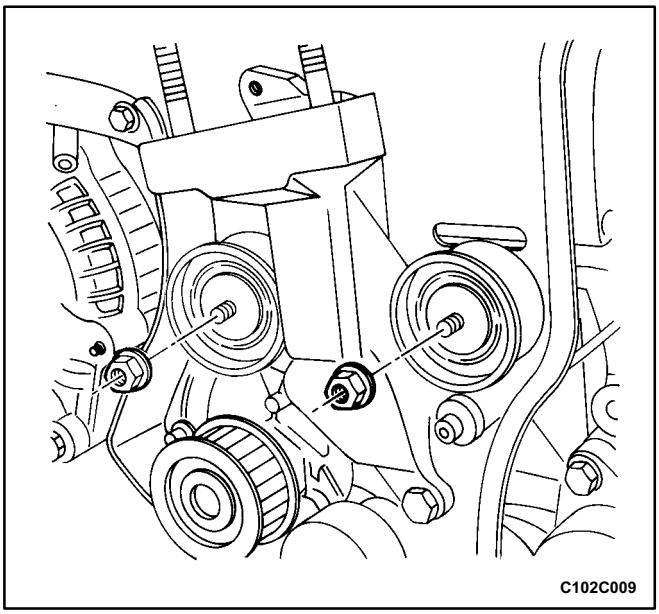

10. Loosen the timing belt automatic tensioner bolt.
11. Rotate the timing belt automatic tensioner hex-key clockwise to release the tension.
12. Remove the timing belt idler pulley nuts.
13. Remove the timing belt idler pulleys.
14. Remove the timing belt.
15. Remove the engine mount retaining bolts.
16. Remove the engine mount.

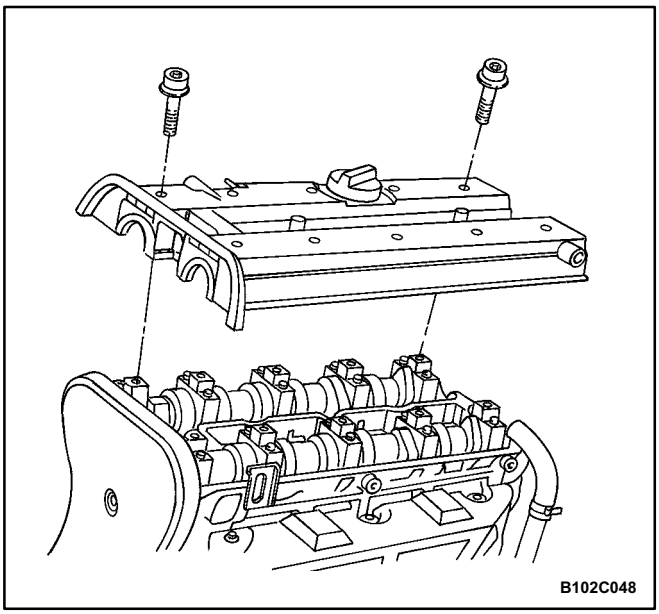

17. Disconnect the crankcase breather tubes from the valve cover.
18. Remove the spark plug cover bolts.
19. Remove the spark plug cover.
20. Disconnect the ignition wires from the spark plugs.
21. Remove the valve cover bolts.
22. Remove the valve cover washers.
23. Remove the valve cover and the valve cover gasket.

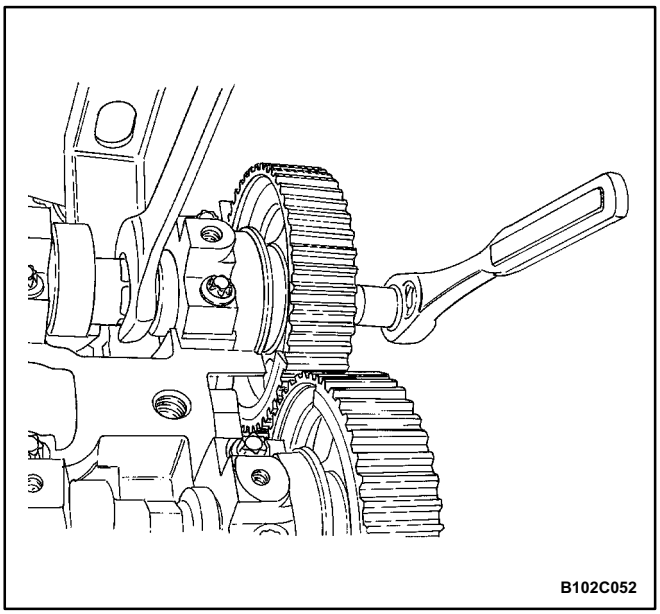

Notice: Take extreme care to prevent any scratches, nicks or damage to the camshafts.

24. While holding the intake camshaft firmly in place, remove the intake camshaft bolt.
25. Remove the intake camshaft gear.
26. While holding the exhaust camshaft firmly in place, remove the exhaust camshaft bolt.
27. Remove the exhaust camshaft gear.

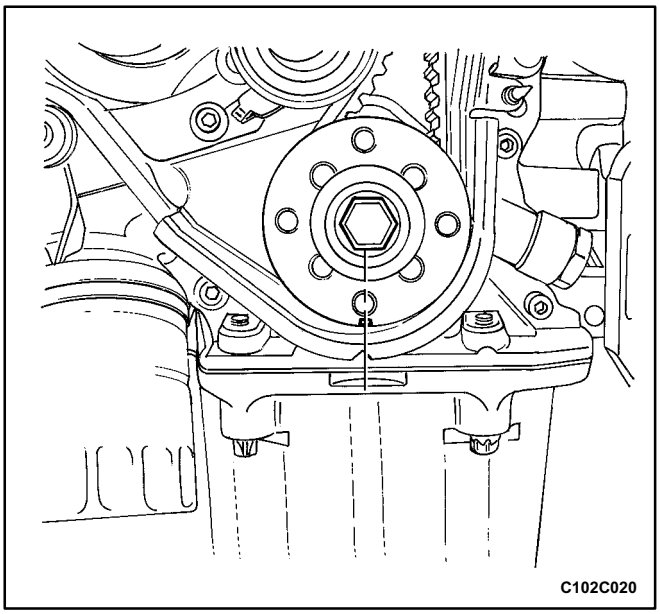

28. Remove the crankshaft timing belt gear.

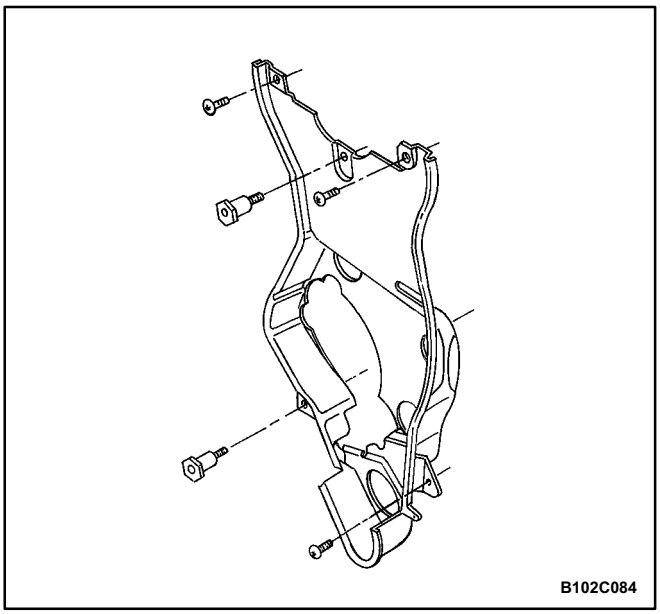

29. Remove the rear timing belt cover bolts and cover.

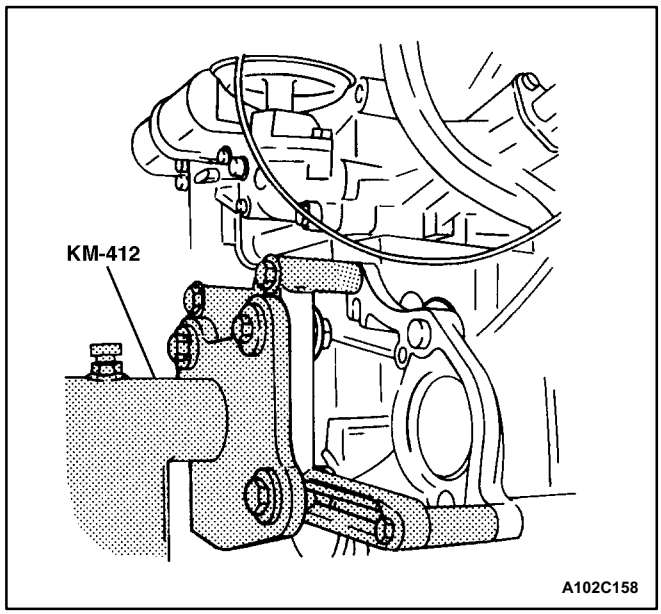

30. Rotate the engine on the engine overhaul stand KM-412.

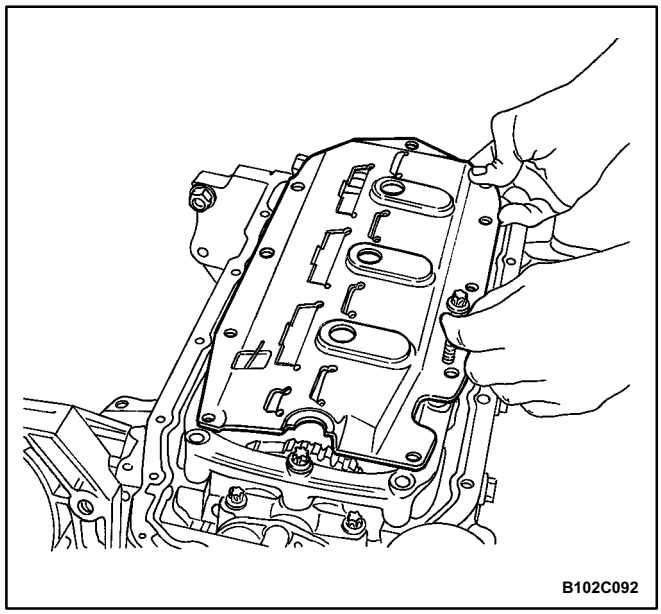

31. Remove the oil pan retaining bolts.
32. Remove the oil pan.
33. Remove the oil pump/pickup tube bolts.
34. Remove the oil pump/pickup tube.
35. Remove the lower block support bracket/splash shield bolts.
36. Remove the splash shield.
37. Remove the lower block support bracket bolts.
38. Remove the lower block support bracket.

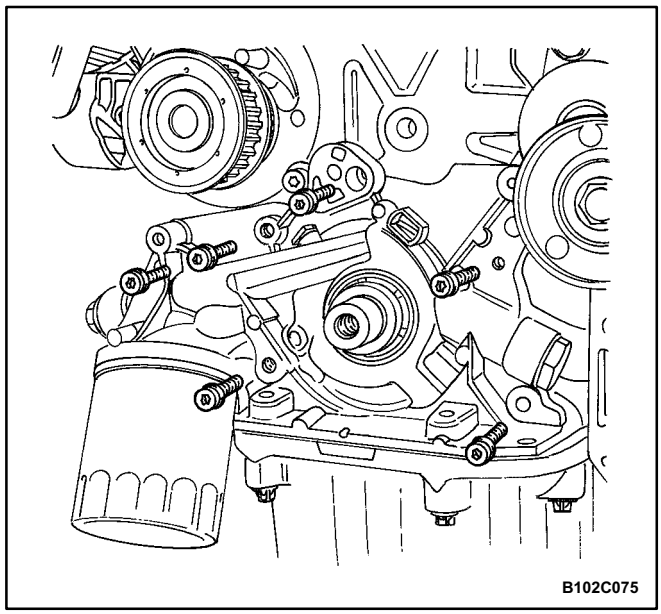

39. Remove the oil pump retaining bolts.
40. Remove the oil pump.

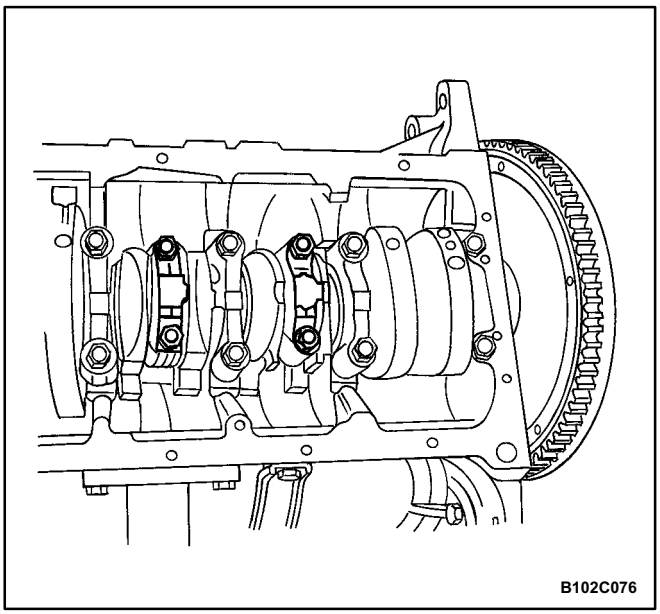

41. Mark the order of the connecting rod bearing caps.
42. Remove the connecting rod bearing cap bolts for all of the pistons.
43. Remove the connecting rod bearing caps and the lower connecting rod bearings.

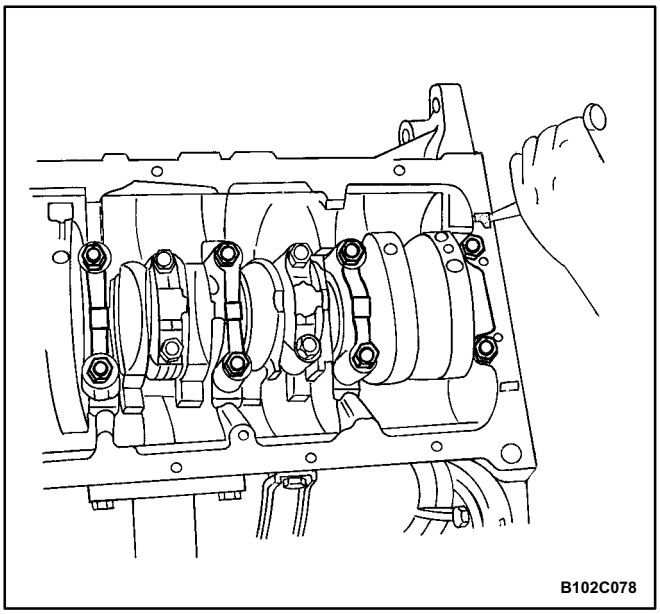

44. Mark the order of the crankshaft bearing caps.
45. Remove the crankshaft bearing cap bolts.
46. Remove the crankshaft bearing caps and the lower crankshaft bearings.
47. Remove the crankshaft.
48. Clean any necessary parts.

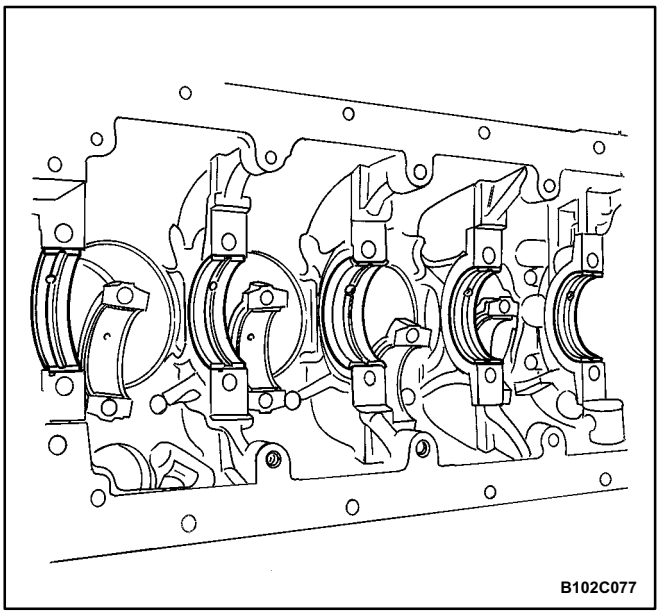

Assembly Procedure

1. Coat the crankshaft bearings with engine oil.
2. If replacing the crankshaft, transfer the pulse pick-up sensor disc to the new crankshaft.

Tighten

Tighten the pulse pickup sensor disc to 13 N•m (115 lb•in).

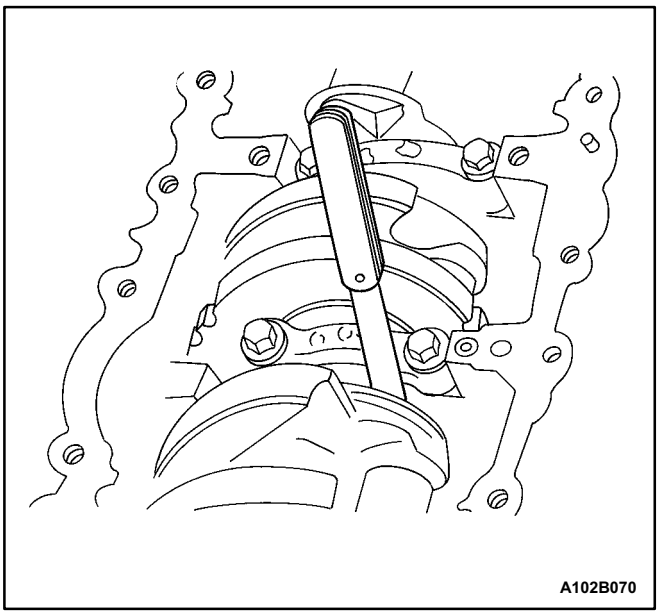

3. Install the crankshaft.
4. Install the lower crankshaft bearings in the bearing caps.
5. Inspect the crankshaft end play with the crankshaft bearings installed.
6. Check for permissible crankshaft end play. Refer to "Engine Specifications" in this section.

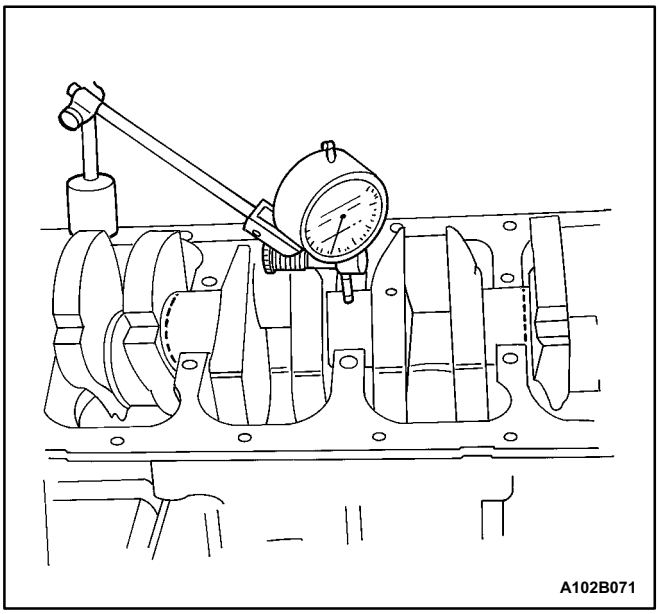

7. With the crankshaft mounted on the front and rear crankshaft bearings, check the middle crankshaft journal for permissible out-of-round (runout). Refer to "Engine Specifications" in this section.

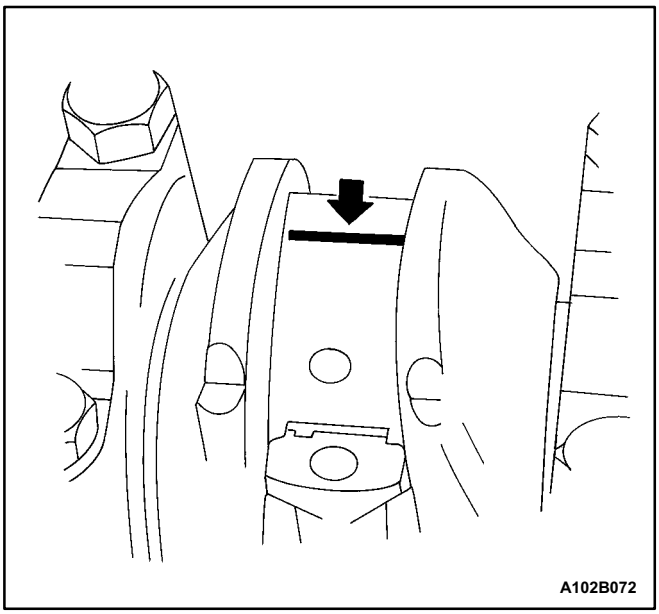

Important: Grease the crankshaft journals and lubricate the crankshaft bearings slightly so that the plastic gauging thread does not tear when the crankshaft bearing caps are removed.

8. Inspect all of the crankshaft bearing clearances us-ing a commercially available plastic gauging (ductile plastic threads).
9. Cut the plastic gauging threads to the length of the bearing width. Lay them axially between the crank-shaft journals and the crankshaft bearings.
10. Install the crankshaft bearing caps and the bolts.

Tighten

Tighten the crankshaft bearing cap bolts to 50 N•m (37 lb•ft). Using the angular torque gauge KM-470 -B, tighten the bolt an additional turn of plus 45 degrees plus 15 degrees.

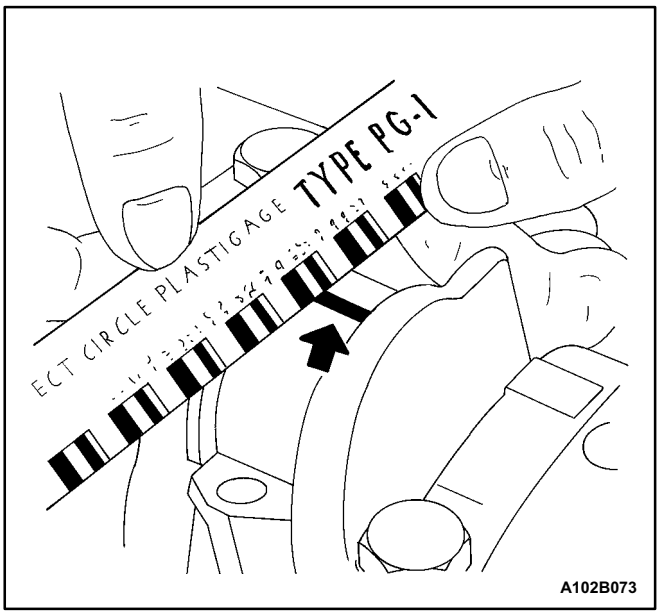

11. Remove the crankshaft bearing cap bolts and the caps.
12. Measure the width of the flattened plastic thread of the plastic gauging using a ruler. (Plastic gauging is available for different tolerance ranges.)
13. Inspect the bearing clearance for permissible toler-ance ranges. Refer to "Engine Specifications" in this section.

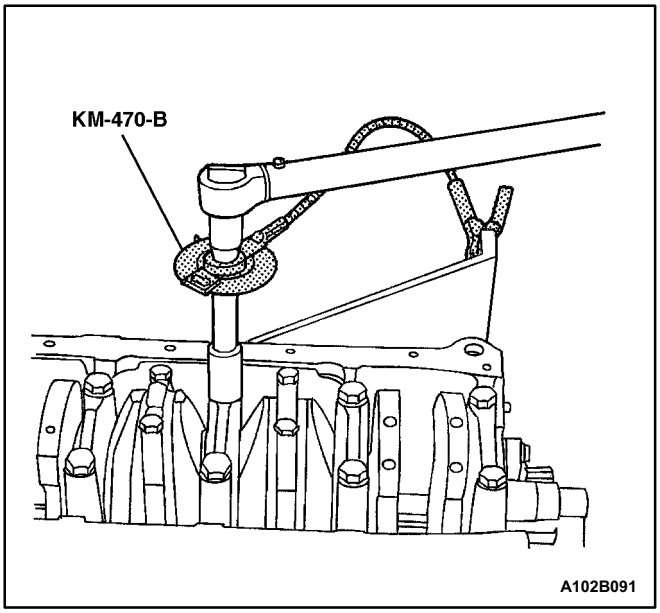

14. Apply a bead of adhesive sealing compound to the grooves of the crankshaft bearing caps.
15. Install the crankshaft bearing caps to the engine block.
16. Tighten the crankshaft bearing caps using new bolts.

Tighten

Tighten the crankshaft bearing cap bolts to 50 N•m (37 lb•ft) using a torque wrench. Use the angular torque gauge KM-470-B to tighten the crankshaft bearings plus 45 degrees plus 15 degrees.

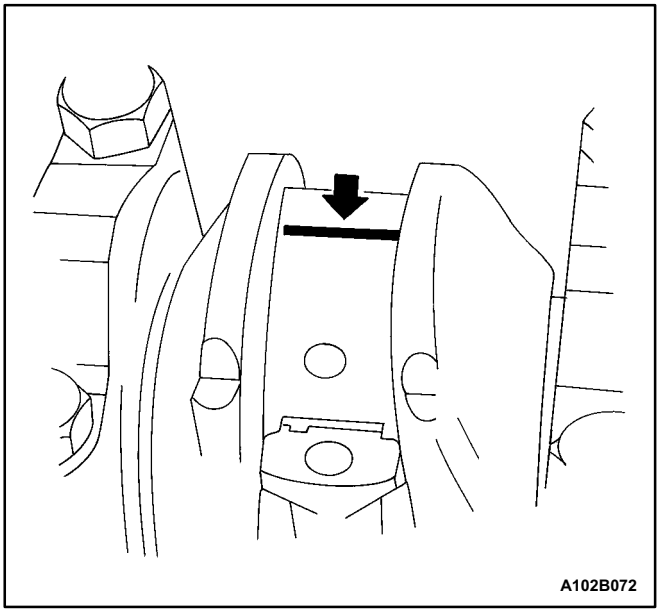

Important: Grease the connecting rod journals and lu-bricate the connecting rod bearings slightly so that the plastic gauging thread does not tear when the connect-ing rod bearing caps are removed.

17. Inspect all of the connecting rod bearing clearances using a commercially available plastic gauging (ductile plastic threads).
18. Cut the plastic gauging threads to the length of the connecting rod bearing width. Lay them ax-ially between the connecting rod journals and the connecting rod bearings.
19. Install the connecting rod bearing caps.

Tighten

Tighten the connecting rod bearing cap bolts to 35 N•m (26 lb•ft) using a torque wrench. Use the an-gular torque gauge KM-470-B to tighten the con-necting rod bearing cap bolts to plus 45 degrees plus 15 degrees.

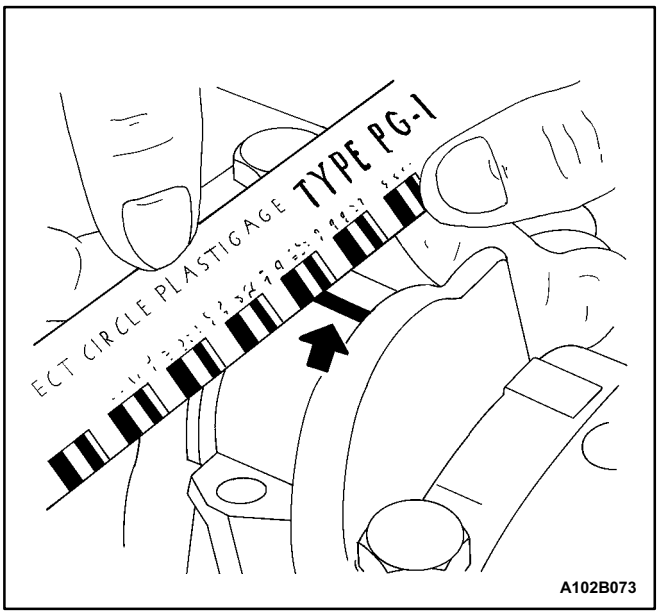

20. Remove the connecting rod bearing caps.
21. Measure the width of the flattened plastic thread of the plastic gauging using a ruler. (Plastic gauging is available for different tolerance ranges.)
22. Inspect the bearing clearance for permissible toler-ance ranges. Refer to "Engine Specifications" in this section.

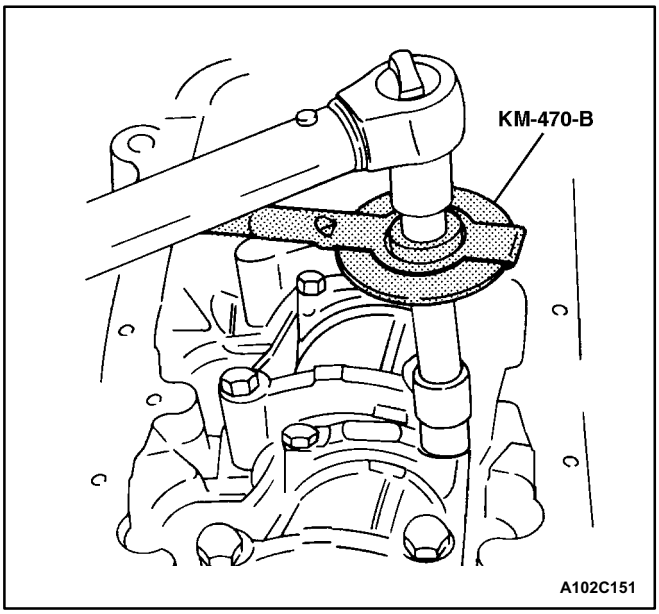

23. Install the connecting rod bearing caps to the con-necting rods.
24. Tighten the connecting rod bearing caps using new bolts.

Tighten

Tighten the connecting rod bearing cap bolts to 35 N•m (26 lb•ft) using a torque wrench. Use the angular torque gauge KM-470-B to tighten the connecting rod cap bolts to plus 45 degrees plus 15 degrees.

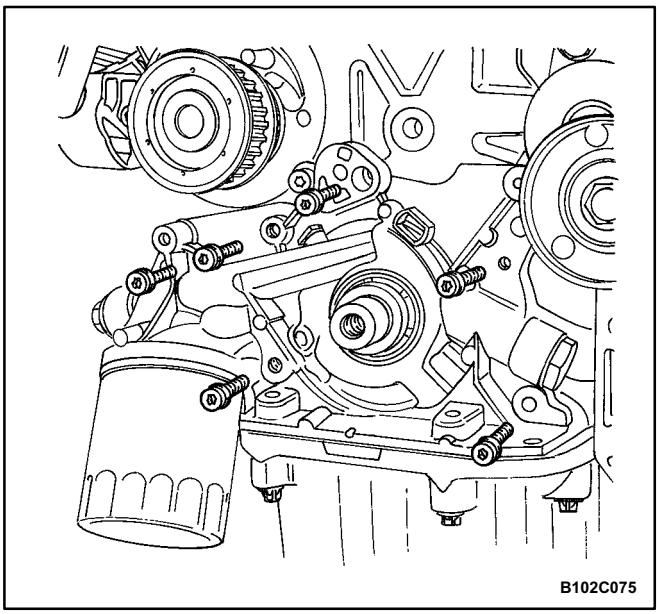

25. Install the oil pump.
26. Install the oil pump retaining bolts.

Tighten

Tighten the oil pump retaining bolts to 10 N•m (89 lb•in).

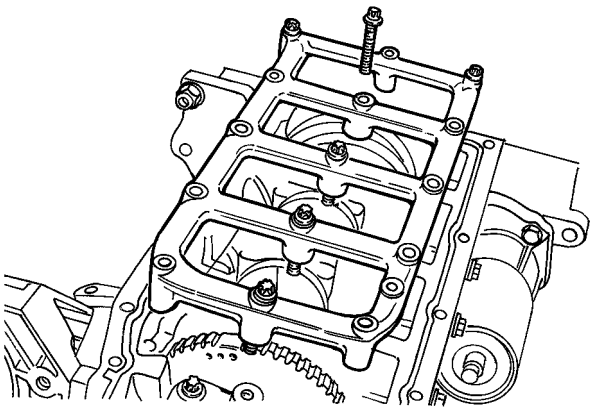

B102C091

27. Install the lower block support bracket and bolts.

Tighten

Tighten the lower block support bolts to 35 N•m (26 lb•in).

28. Install the lower block support bracket splash shield and bolts.

Tighten

Tighten the lower block support bracket and splash shield bolts to 35 N•m (26 lb•ft).

29. Install the oil pump/pickup tube.
30. Install the oil pump/pickup tube bolts.

Tighten

Tighten the oil pump/pickup tube bolts to 8 N•m (71 lb•in).

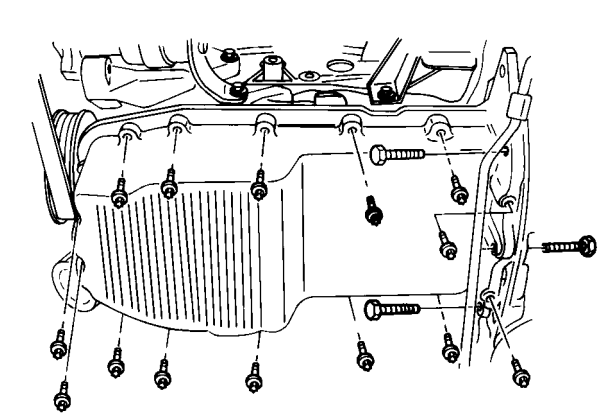

C102C016

31. Coat the new oil pan gasket with sealant.
32. Install the oil pan gasket to the oil pan.
33. Install the oil pan.
34. Install the oil pan retaining bolts.

Tighten

Tighten the oil pan retaining bolts to 10 N•m (89 lb•in).

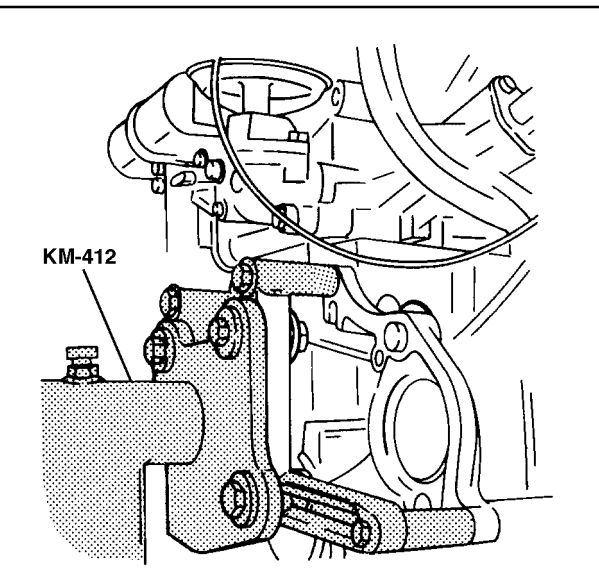

A102C158

35. Rotate the engine on the engine overhaul stand KM-412.

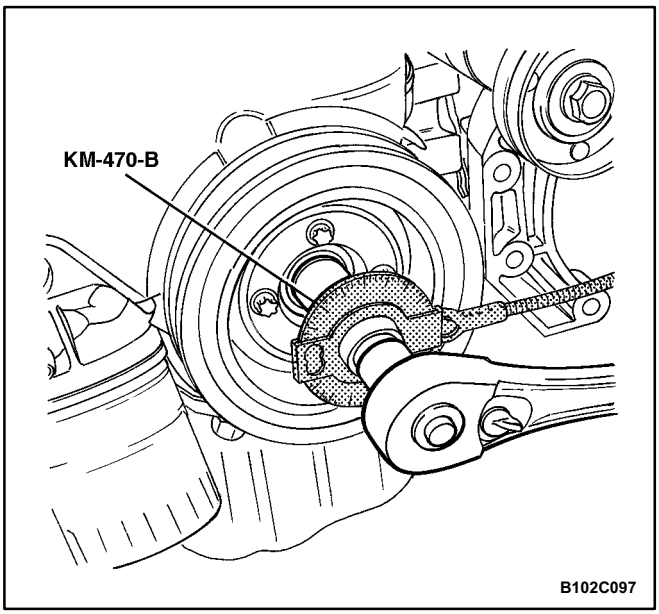

36. Install the rear timing belt cover.
37. Install the rear timing belt cover bolts.

Tighten

Tighten the rear timing belt cover bolts to 6 N•m (53 lb•in).

38. Install the crankshaft timing belt drive gear and bolt.

Tighten

Tighten the crankshaft timing belt drive gear bolt to 130 N•m (96 lb•ft) plus 40 degrees to 50 degress us-ing the torque angular gauge KM-470-B.

39 Install the engine mount and retaining bolts.

Tighten

Tighten the engine mount retaining bolts to 60 N•m (44 lb•ft).

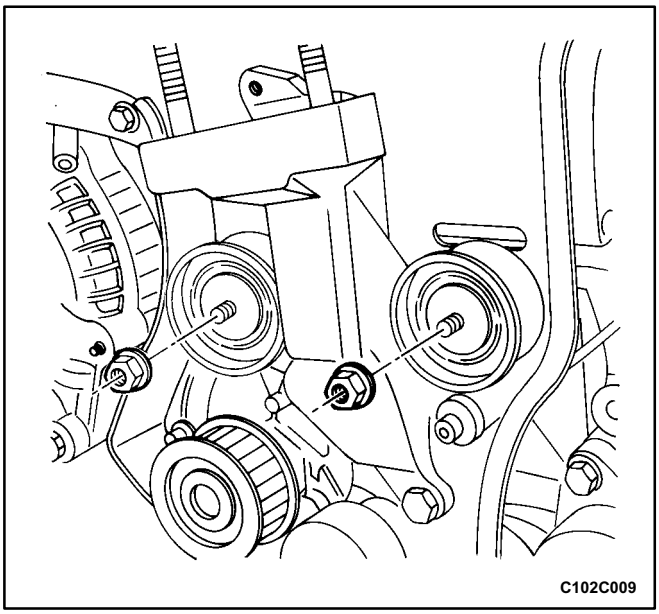

40. Install the timing belt automatic tensioner.
41. Install the timing belt automatic tensioner bolts.

Tighten

Tighten the timing belt automatic tensioner bolts to 25 N•m (18 lb•ft).

42. Install the timing belt idler pulley.
43. Install the timing belt idler pulley nuts.

Tighten

Tighten the timing belt idler pulley nuts to 25 N•m (18 lb•ft).

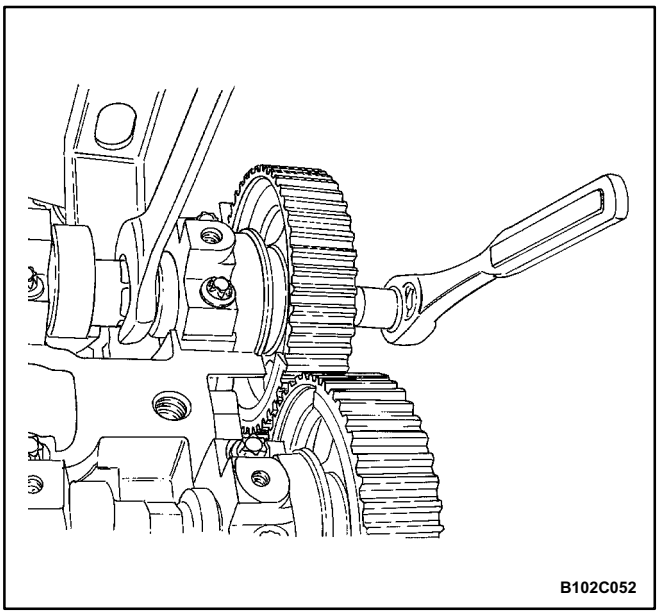

Notice: Take extreme care to prevent any scratches, nicks or damage to the camshafts.

44. Install the intake camshaft gear.
45. Install the intake camshaft gear bolt while holding the intake camshaft firmly in place.

Tighten

Tighten the intake camshaft gear bolt to 50 N•m (37 lb•ft) plus 60 degrees and 15 degrees.

46. Install the exhaust camshaft gear.
47. Install the exhaust camshaft gear bolt while holding the exhaust camshaft firmly in place.

Tighten

Tighten the exhaust camshaft gear bolt to 50 N•m (37 lb•ft) plus 60 degrees and 15 degrees.

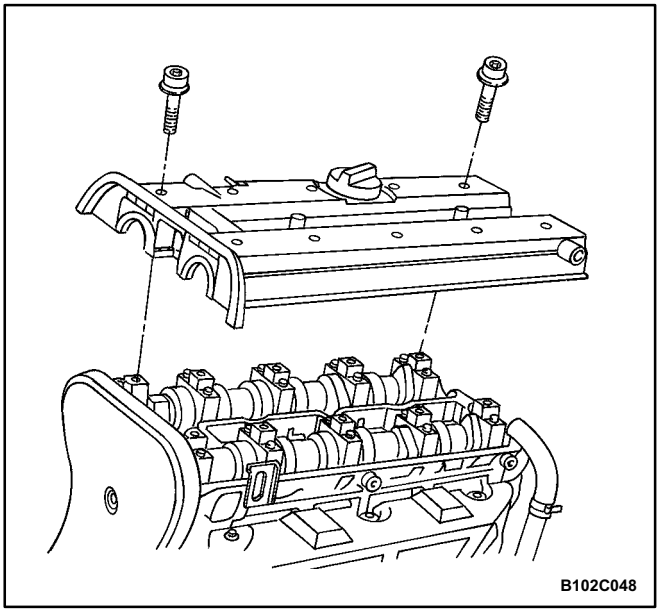

48. Install the timing belt. Refer to Timing Belt" in this section.
49. Adjust the timing belt tension. Refer to Timing Belt Check and Adjust" in this section.
50. Apply a small amount of gasket sealant to the cor-ners of the front camshaft caps and to the top of the rear valve cover to cylinder head seal.
51. Install the valve cover and the valve cover gasket.
52. Install the valve cover washers.
53. Install the valve cover bolts.

Tighten

Tighten the valve cover bolts to 8 N•m (71 lb•in).

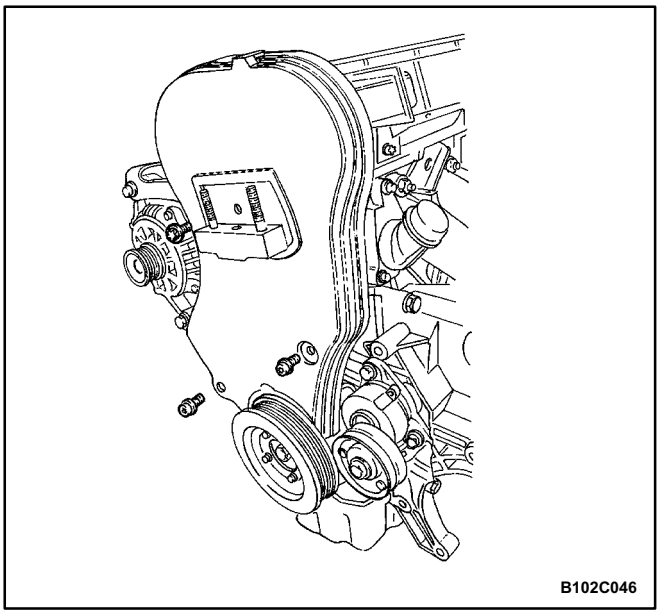

54. Connect the ignition wires to the spark plugs.
55. Install the spark plug cover.
56. Install the spark plug cover bolts.

Tighten

Tighten the spark plug cover bolts to 3 N•m (27 lb•in).

57. Connect the crankcase breather tube to the valve cover.
58. Install the front timing belt cover.
59. Install the front timing belt cover bolts.

Tighten

Tighten the front timing belt cover bolts to 8 N•m (71 lb•in).

60. Install the engine lifting device.
61. Remove the engine from the engine overhaul stand KM-412.

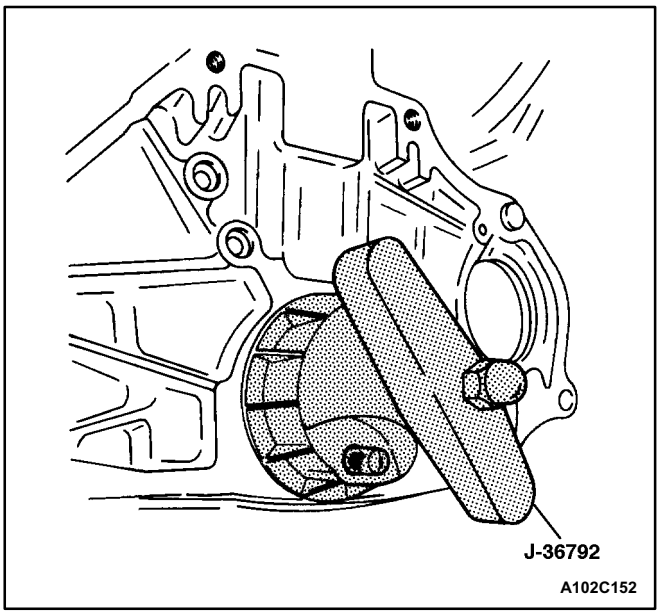

62. Install a new crankshaft rear oil seal using installer J-36972 (or KM-635).

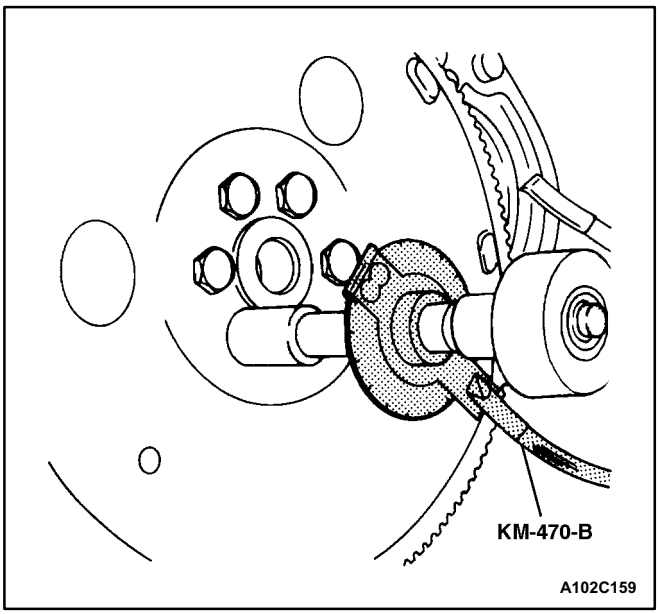

63. Install the flywheel or flexible plate.
64. Install the flywheel or the flexible plate bolts.

Tighten

Tighten the flywheel bolts to 65 N•m (48 lb•ft). Use the angular torque gauge KM-470-B to tighten the flywheel bolts to 30 degrees plus 15 degrees. For the automatic transmission, tighten the flexible plate bolts to 65 N•m (48 lb•ft).

65. Install the engine. Refer to "Engine" in this section.

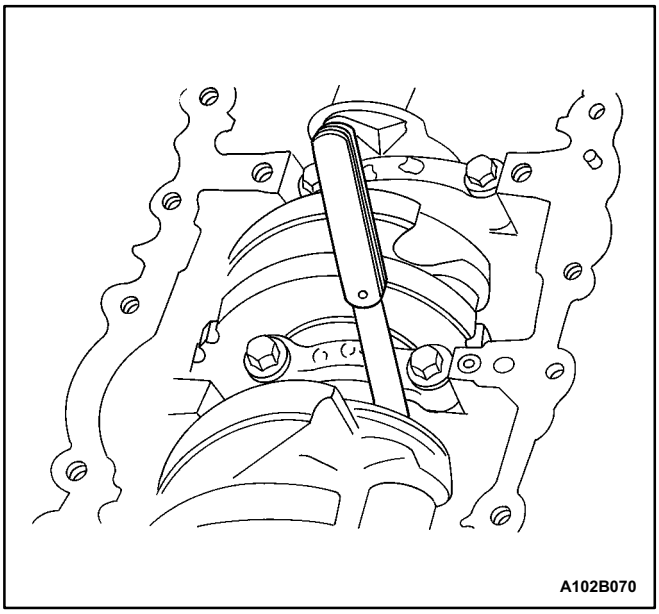

CRANKSHAFT BEARINGS AND CONNECTING ROD BEARINGS - GAUGING PLASTIC

Tools Required

KM-470-B Angular Torque Gauge

Inspection Procedure - Crankshaft

1. Coat the crankshaft bearings with engine oil.
2. Install the upper crankshaft bearings into the engine block crankshaft journals.
3. Install the lower crankshaft bearings into the crank-shaft bearing caps.
4. Install the crankshaft.
5. Inspect the crankshaft end play with the crankshaft bearings installed.
6. Check for permissible crankshaft end play. Refer to "Engine Specifications" in this section.

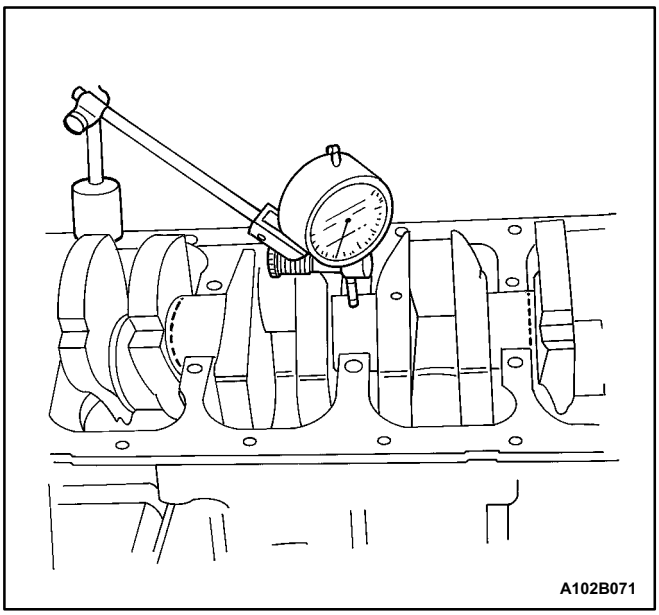

7. With the crankshaft mounted on the front and rear crankshaft bearings, check the middle crankshaft journal for permissible out-of-round (runout). Refer to "Engine Specifications" in this section.

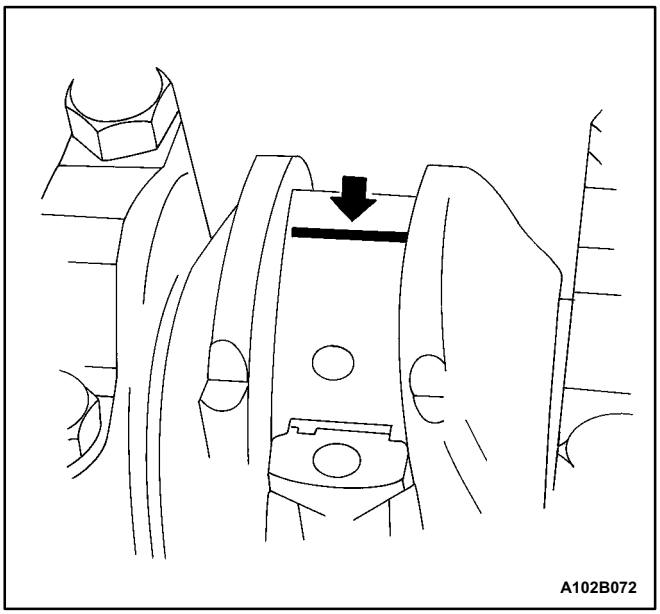

Important: Grease the crankshaft journals and lubricate the crankshaft bearings slightly so that the plastic gauging thread does not tear when the crankshaft bearing caps are removed.

8. Inspect all of the crankshaft bearing clearances using a commercially available plastic gauging (ductile -plastic threads).
9. Cut the plastic gauging threads to the length of the bearing width. Lay them axially between the crank-shaft journals and the crankshaft bearings.

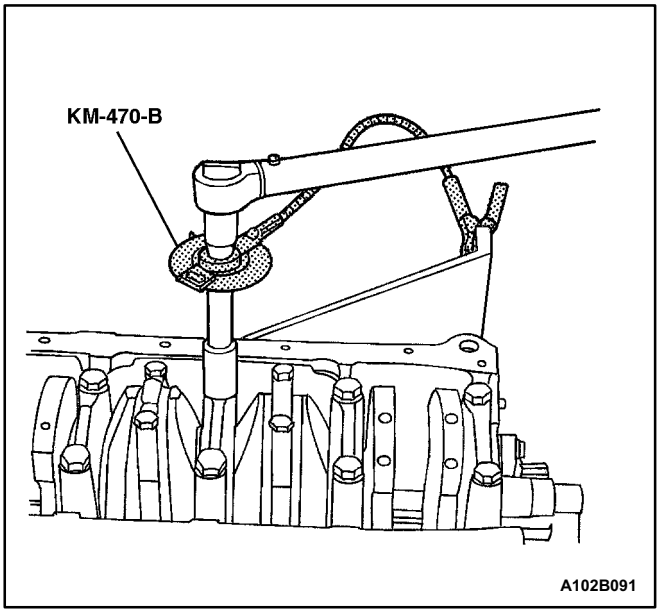

10. Install the crankshaft bearing caps.
11. Install the crankshaft bearing cap bolts.

Tighten

Tighten the crankshaft bearing cap bolts to 50 N•m (37 lb•ft). Using the angular torque gauge KM-470-B, tighten the crankshaft bearing cap bolts to plus 45 de-grees plus 15 degrees.

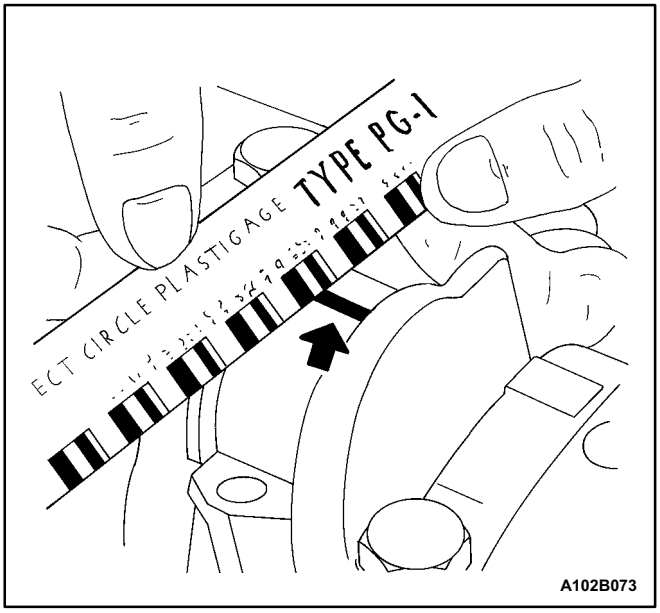

12. Remove the crankshaft bearing caps.
13. Measure the width of the flattened plastic thread of the plastic gauging using a ruler. (Plastic gauging is available for different tolerance ranges.)
14. Inspect the bearing clearances for permissible tol-erance ranges. Refer to "Engine Specifications" in this section.

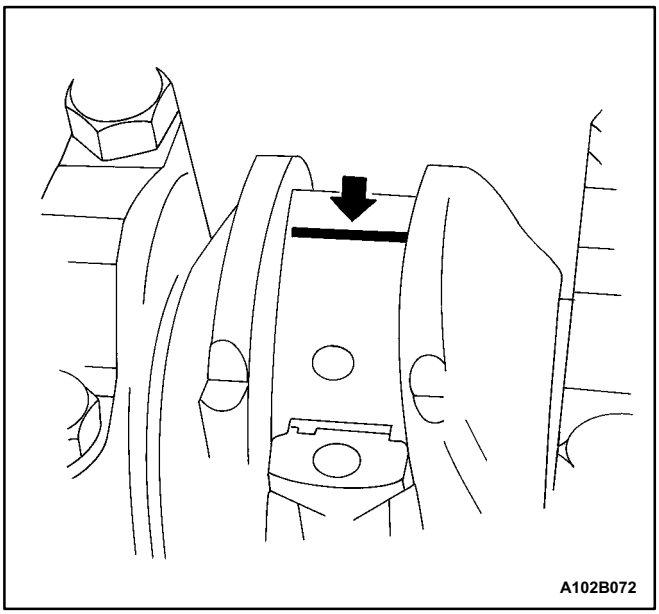

Inspection Procedure - Connecting Rods

1. Coat the connecting rod bearings with engine oil.
2. Install the upper connecting rod bearings into the connecting rod journals.
3. Install the lower connecting rod bearings into the connecting rod bearing caps.

Important: Grease the connecting rod journals and lu-bricate the connecting rod bearings slightly so that the plastic gauging thread does not tear when the connect-ing rod bearing caps are removed.

4. Inspect all of the connecting rod bearing clearances using a commercially available plastic gauging (ductile plastic threads).
5. Cut the plastic gauging threads to the length of the bearing width. Lay them axially between the connecting rod journals and the connecting rod bearings.

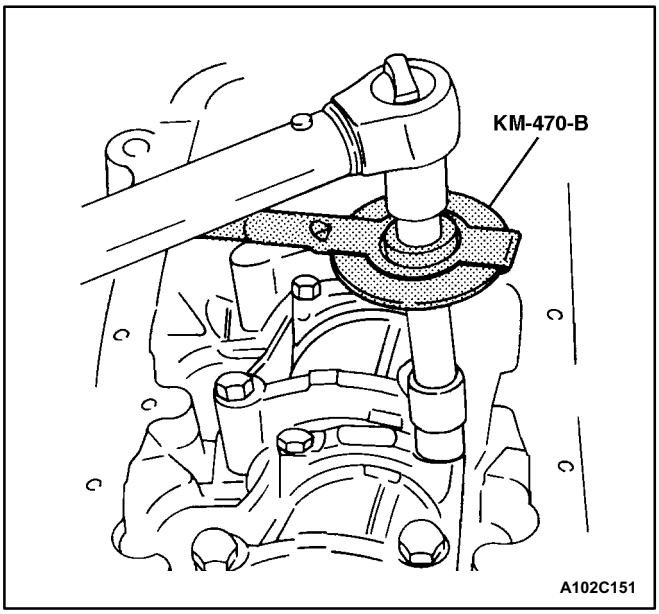

6. Install the connecting rod bearing caps.
7. Install the connecting rod bearing cap bolts.

Tighten

Tighten the connecting rod bearing cap bolts to 35 N•m (26 lb•ft). Using the angular torque gauge KM-470-B, tighten the connecting rod cap bolts to plus 45 degrees plus 15 degrees.

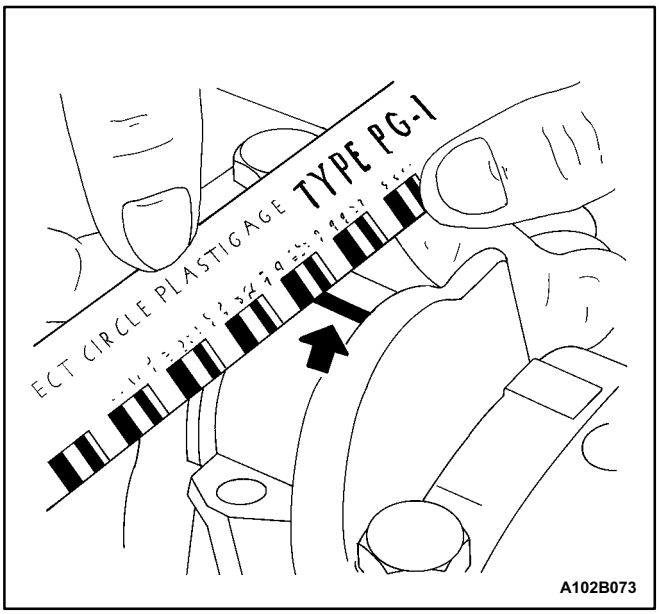

8. Remove the connecting rod bearing caps.
9. Measure the width of the flattened plastic thread of the plastic gauging using a ruler. (Plastic gauging is available for different tolerance ranges.)
10. Inspect the bearing clearance for permissible toler-ance ranges. Refer to "Engine Specifications" in this section.

GENERAL DESCRIPTION AND SYSTEM OPERATION

CYLINDER HEAD AND GASKET

The cylinder head is made of an aluminum alloy. The cylinder head uses cross-flow intake and exhaust ports. A spark plug is located in the center of each combustion chamber. The cylinder head houses the dual camshafts.

CRANKSHAFT

The crankshaft has eight integral weights which are cast with it for balancing. Oil holes run through the center of the crankshaft to supply oil to the connecting rods, the bearings, the pistons, and the other components. The end thrust load is taken by the thrust washers installed at the center journal.

TIMING BELT

The timing belt coordinates the crankshaft and the dual overhead camshafts and keeps them synchronized. The timing belt also turns the coolant pump. The timing belt and the pulleys are toothed so that there is no slippage between them. There are two idler pulleys. An automatic tensioner pulley maintains the timing belt's correct ten-sion. The timing belt is made of a tough reinforced rub-ber similar to that used on the serpentine drive belt. The timing belt requires no lubrication.

OIL PUMP

The oil pump draws engine oil from the oil pan and feeds it under pressure to the various parts of the engine. An oil strainer is mounted before the inlet of the oil pump to remove impurities which could clog or damage the oil pump or other engine components. When the crank-shaft rotates, the oil pump driven gear rotates. This causes the space between the gears to constantly open and narrow, pulling oil in from the oil pan when the space opens and pumping the oil out to the engine as it nar-rows.

At high engine speeds, the oil pump supplies a much higher amount of oil than required for lubrication of the engine. The oil pressure regulator prevents too much oil from entering the engine lubrication passages. During normal oil supply, a coil spring and valve keep the by-pass closed, directing all of the oil pumped to the engine. When the amount of oil being pumped increases, the pressure becomes high enough to overcome the force of the spring. This opens the valve of the oil pressure regulator, allowing the excess oil to flow through the valve and drain back to the oil pan.

OIL PAN

The engine oil pan is mounted to the bottom of the cyl-inder block. The engine oil pan houses the crankcase and is made of cast aluminum.

Engine oil is pumped from the oil pan by the oil pump. After it passes through the oil filter, it is fed through two paths to lubricate the cylinder block and cylinder head. In one path, the oil is pumped through oil passages in the crankshaft to the connecting rods, then to the pis-tons and cylinders. It then drains back to the oil pan. In the second path, the oil is pumped through passages to the camshaft. The oil passes through the internal pas-sageways in the camshafts to lubricate the valve as-semblies before draining back to the oil pan.

EXHAUST MANIFOLD

A single four□port, rear□takedown manifold is used with this engine. The manifold is designed to direct es-caping exhaust gases out of the combustion chambers with a□minimum of back pressure. The oxygen sensor is mounted to the exhaust manifold.

INTAKE MANIFOLD

The intake manifold has four independent long ports and utilizes an inertial supercharging effect to improve en-gine torque at low and moderate speeds.

CAMSHAFTS

This engine is a dual overhead camshaft (DOHC) type, which means there are two camshafts. One camshaft operates the intake valves, and the other camshaft op-erates the exhaust valves. The camshafts sit in journals on the top of the engine (in the cylinder head) and are held in place by camshaft caps. The camshaft journals of the cylinder head are drilled for oil passages. Engine oil travels to the camshafts under pressure where it lu-bricates each camshaft journal. The oil returns to the oil pan through drain holes in the cylinder head. The cam-shaft lobes are machined into the solid camshaft to pre-cisely open and close the intake and the exhaust valves the correct amount at the correct time. The camshaft lobes are oiled by splash action from pressurized oil es-caping from the camshaft journals.

EXHAUST GAS RECIRCULATION VALVE

The exhaust gas recirculation (EGR) system is used to lower oxides of nitrogen (NOX) emission levels caused by high combustion temperature. The main element of the system is the EGR valve operated by

The EGR valve feeds small amounts of exhaust gas into the intake manifold to decrease combustion tempera-ture. The amount of exhaust gas recirculated is con-trolled by variations in vacuum and exhaust back pressure. If too much exhaust gas enters, combustion will not take place. For this reason, very little exhaust gas is allowed to pass through the valve, especially at idle.

The EGR valve is usually open under the following con-ditions:

- Warm engine operation.
- Above idle speed.

SECTION 1D

ENGINE COOLING

CAUTION: Disconnect the negative battery cable before removing or installing any electrical unit or when a tool or equipment could easily come in contact with exposed electrical terminals. Disconnecting this cable will help prevent personal injury and damage to the vehicle. The ignition must also be in LOCK unless otherwise noted.

TABLE OF CONTENTS

Specifications 1D-1
Capacity 1D-1
Fastener Tightening Specifications 1D-2
Special Tools 1D-2
Special Tools Table 1D-2
Diagnosis 1D-3
Thermostat Test 1D-3
Surge Tank Cap Test 1D-3
Cooling System Diagnosis 1D-4
Component Locator 1D-5
Radiator/Fan 1D-5
Coolant Pump/Thermostat (DOHC) 1D-6
Coolant Pump/Thermostat (SOHC) 1D-7
Maintenance and Repair 1D-8
On-Vehicle Service 1D-8
Draining and Refilling the Cooling System 1D-8
Thermostat 1D-9
Coolant Pump 1D-12
Electric Cooling Fan - Main or Auxiliary 1D-15
Surge Tank 1D-17
Radiator 1D-18
Coolant Temperature Sensor 1D-21
General Description and System Operation 1D-23
General Description 1D-23
Radiator 1D-23
Surge Tank 1D-23
Coolant Pump 1D-23
Thermostat 1D-23
Electric Cooling Fan 1D-24
Coolant Temperature Sensor 1D-24
Engine Coolant Temperature Sensor 1D-24
Engine Block Heater 1D-24

SPECIFICATIONS

CAPACITY

Application	Description
Coolant in the Cooling System (DOHC MPFI System)	7.0L (1.86 gal)
Coolant in the Cooling System (SOHC MPFI System)	7.0L (1.86 gal)

FASTENER TIGHTENING SPECIFICATIONS

Application	N•m	Lb•Ft	Lb•In
Coolant Pump Mounting Bolts	20	15	-
Coolant Temperature Sensor	20	15	-
Fan Assembly Mounting Bolts	4	-	35
Fan Motor Nut	3.2	-	28
Fan Motor Retaining Screws	4	-	35
Radiator Retaining Bolts	4	-	35
Surge Tank Attaching Bolt	4	-	35
Thermostat Housing Mounting Bolt	15	11	-
Transaxle Fluid Cooler Pipe Bolt	22	16	-

SPECIAL TOOLS

SPECIAL TOOLS TABLE

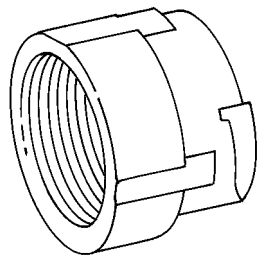 A102D020	**KM-471 Adapter**

DIAGNOSIS

THERMOSTAT TEST

1. Remove the thermostat from the vehicle. Refer to Thermostat" in this section.
2. Make sure the valve spring is tight when the thermo-stat is fully closed. If the spring is not tight, replace the thermostat.
3. Suspend the thermostat and a thermometer in a pan of 50/50 mixture of ethylene glycol and water. Do not let the thermostat or the thermometer rest on the bottom of the pan because the uneven concentration of heat on the bottom could result in inaccurate tem-perature measurements.
4. Heat the pan on a burner.
5. Use the thermometer to measure the temperature of the heated solution.
6. The thermostat should begin to open at 87°C (189°F) and it should be fully open at 102°C (226°F). If it does not open at these temperatures, replace the thermo-stat.

SURGE TANK CAP TEST

Tools Required

KM-471 Adapter

The surge tank cap maintains proper pressure, protects the system from high pressure by opening a pressure valve, and protects the coolant hoses from collapsing because of a vacuum.

1. Wash any sludge from the surge tank cap and the valve seat of the vacuum pressure valve for the surge tank cap.
2. Check for any damage or deformity to the vacuum pressure valve for the surge tank cap. If any damage or deformity is found, replace the cap.
3. Install a suitable cooling system pressure tester to the cap using the adapter KM-471.
4. Pull the vacuum pressure valve open. If the surge tank cap does not seal properly, replace the surge tank cap.
5. Pressurize the cap to 90 to 120 kPa (13 to 17 psi).
6. Wait 10 seconds and check the pressure held by the tank cap tester.

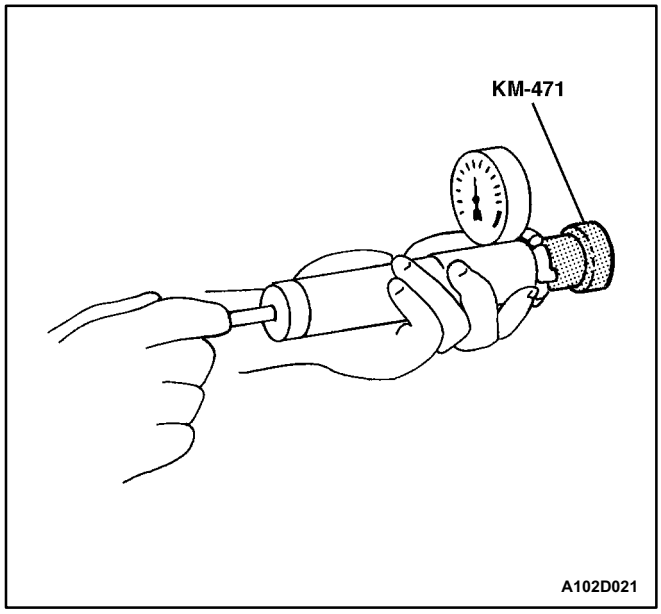

7. If the pressure held by the cooling system pressure tester falls below 80 kPa (11.6 psi), replace the surge tank cap.

COOLING SYSTEM DIAGNOSIS

Engine Overheats

Checks	Action
Check for a loss of the coolant.	Add the coolant.
Check for a weak coolant solution.	Confirm that the coolant solution is a 50/50 mixture of ethylene glycol and water.
Check the front of the radiator for any dirt, any leaves, or any insects.	Clean the front of the radiator.
Check for leakage from the hoses, the coolant pump, the heater, the thermostat housing, the radiator, the core plugs, or the head gasket.	Replace any damaged components.
Check for a faulty thermostat.	Replace a damaged thermostat.
Check for retarded ignition timing.	Perform an ECM code diagnosis. Confirm the integrity of the timing belt.
Check for an improperly operating electric cooling fan.	Replace the electric cooling fan.
Check for radiator hoses that are plugged or rotted.	Replace any damaged radiator hoses.
Check for a faulty water pump.	Replace a faulty water pump.
Check for a faulty surge tank cap.	Replace a faulty surge tank cap.
Check for a cylinder head or an engine block that is cracked or plugged.	Repair the damaged cylinder head or the damaged engine block.

Loss of Coolant

Checks	Action
Check for a leak in the radiator.	Replace a damaged radiator.
Check for a leak in the following locations: ● Surge tank. ● Hose.	Replace the following parts, as needed: ● Surge tank. ● Hose.
Check for loose or damaged radiator hoses, heater hoses, and connections.	Reseat the hoses. Replace the hoses or the clamps.
Check for leaks in the coolant pump seal.	Replace the coolant pump seal.
Check for leaks in the coolant pump gasket.	Replace the coolant pump gasket.
Check for an improper cylinder head torque.	Tighten the cylinder head bolts to specifications. Replace the cylinder head gasket, if needed.
Check for leaks in the following locations: ● Intake manifold. ● Cylinder head gasket. ● Cylinder block plug. ● Heater core. ● Radiator drain plug.	Repair or replace any components, as needed, to correct the leak.

Engine Fails to Reach Normal Operating Temperature or Cool Air from the Heater

Checks	Action
Check to determine if the thermostat is stuck open or is the wrong type of thermostat.	Install a new thermostat of the correct type and heat range.
Check the coolant level to determine if it is below the MIN mark on the surge tank.	Add sufficient coolant to raise the fluid to the specified mark on the surge tank.

COMPONENT LOCATOR

RADIATOR/FAN

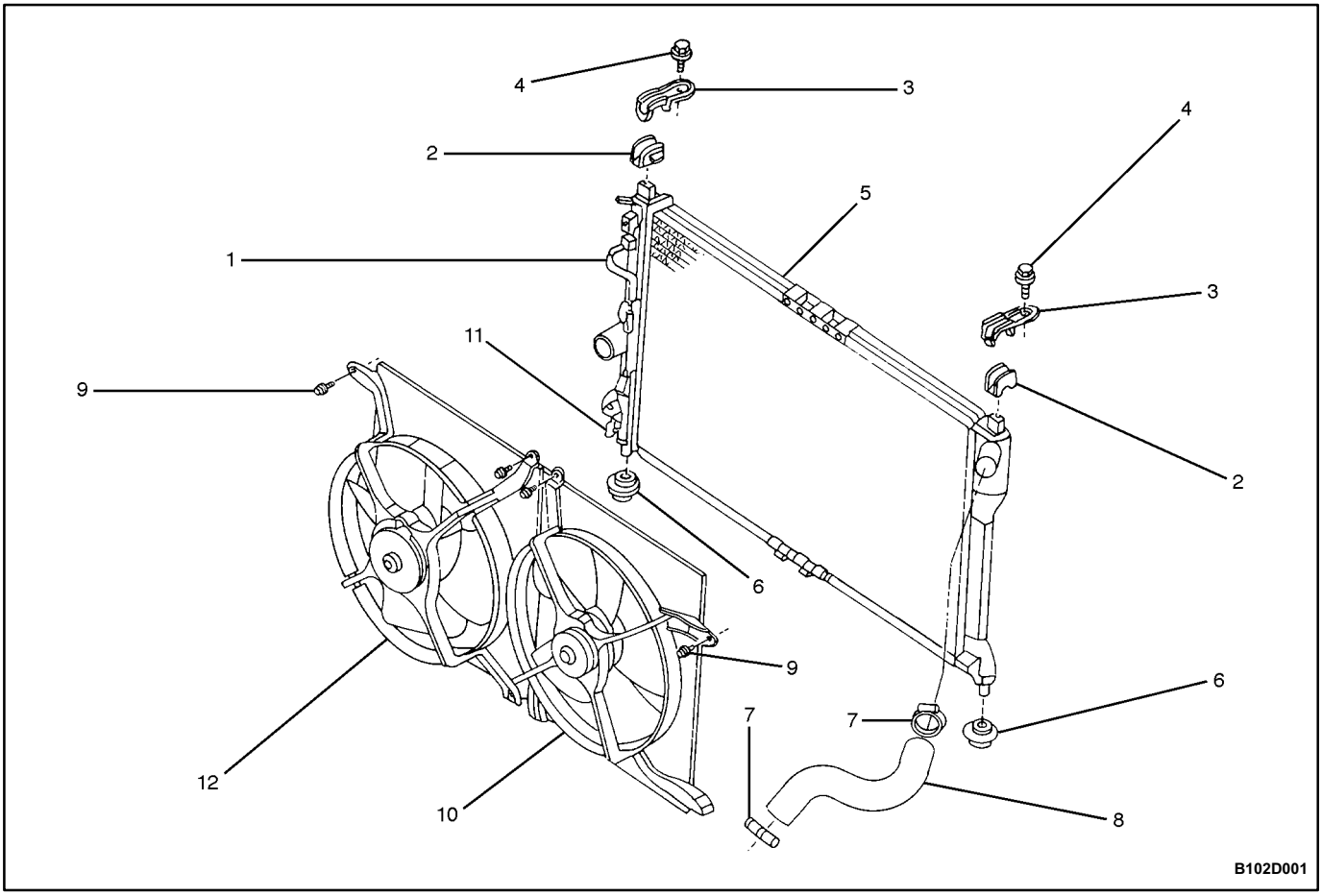

1 Transaxle Fluid Cooler Pipe Holder (Automatic Transaxle Only)
2 Upper Radiator Bumper
3 Radiator Bracket
4 Radiator Retaining Bolts
5 Radiator
6 Radiator Bumper
7 Spring Clamp
8 Upper Radiator Hose
9 Fan Assembly Mounting Bolts
10 Auxiliary Cooling Fan
11 Drain Plug
12 Main Cooling Fan

COOLANT PUMP/THERMOSTAT (DOHC)

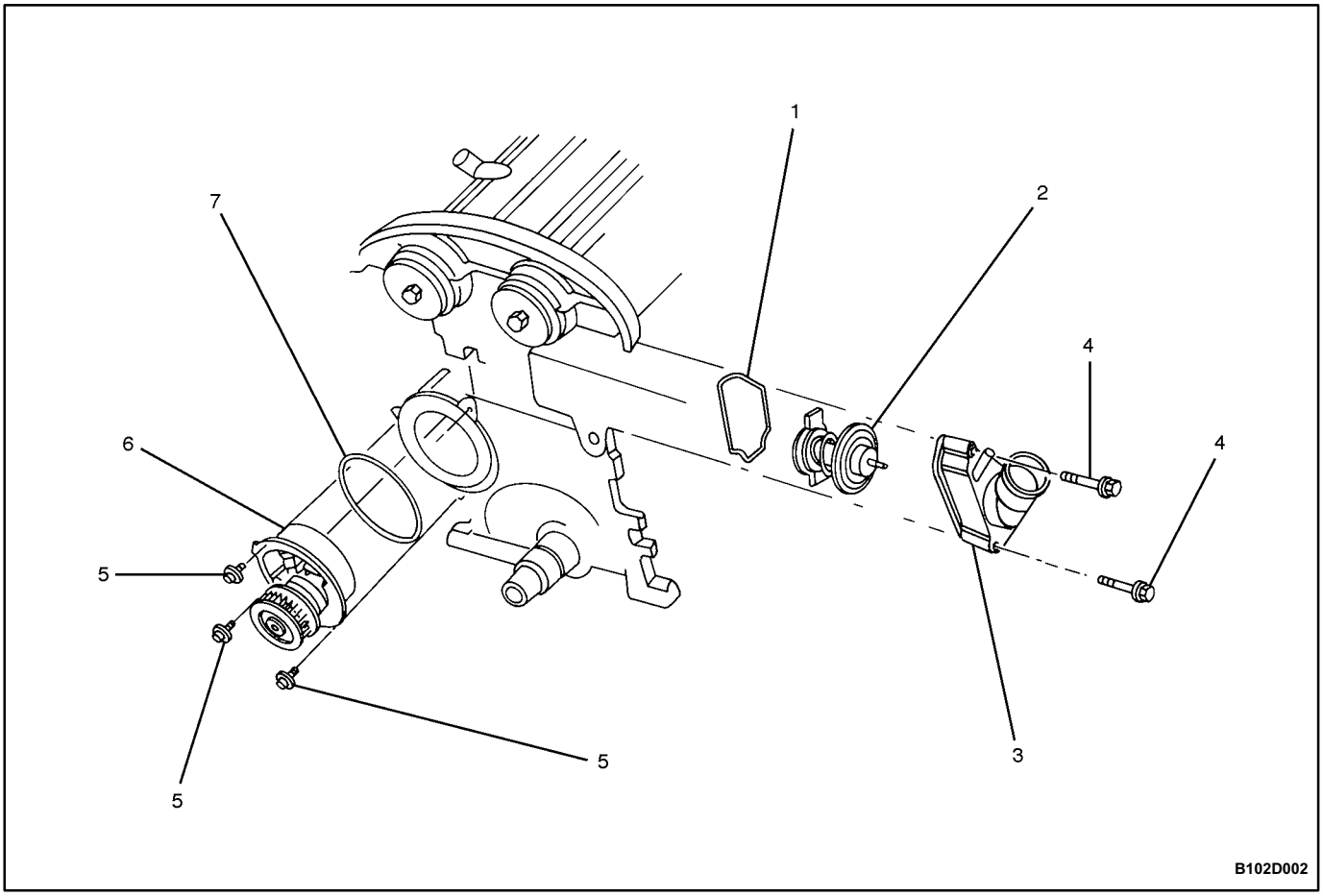

1 ORing Seal
2 Thermostat
3 Thermostat Housing
4 Thermostat Housing Mounting Bolt
5 Coolant Pump Mounting Bolt
6 Coolant Pump
7 Ring Seal

COOLANT PUMP/THERMOSTAT (SOHC)

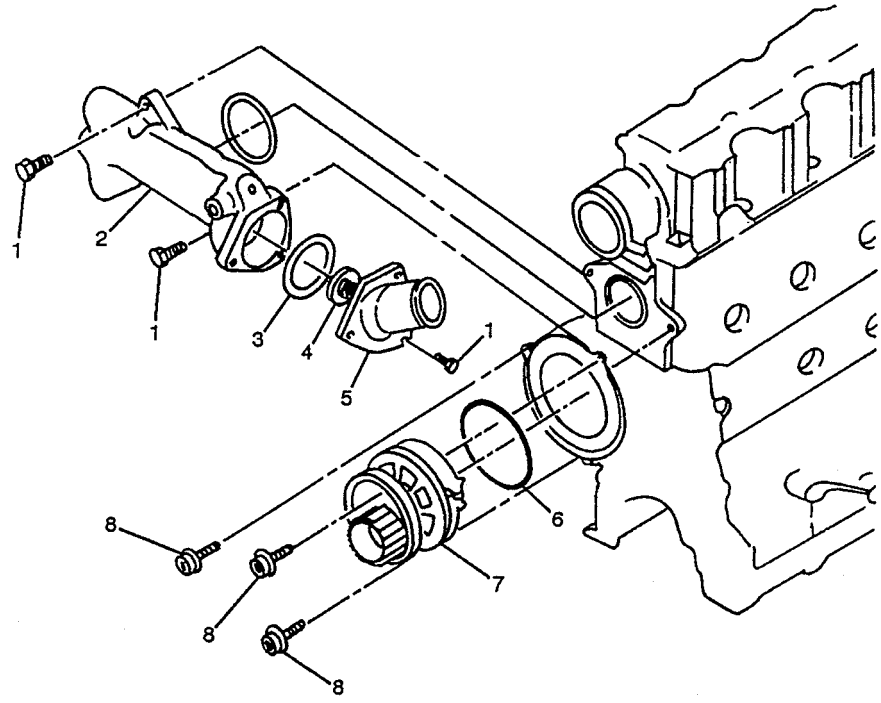

1 Thermostat Housing Mounting Bolt
2 Coolant Housing
3 Seal Ring
4 Thermostat
5 Thermostat Housing
6 ORing
7 Coolant Pump
8 Coolant Pump Mounting Bolts

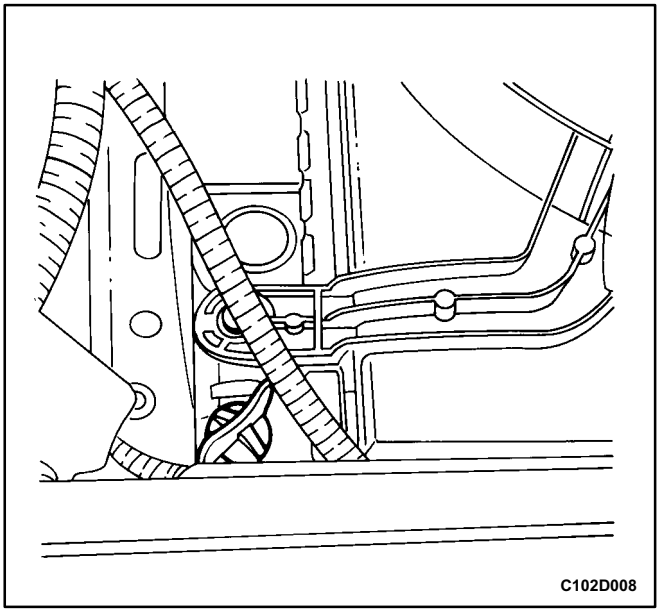

MAINTENANCE AND REPAIR

ON-VEHICLE SERVICE

DRAINING AND REFILLING THE COOLING SYSTEM

Caution: Do not remove the surge tank cap while the engine and the radiator are hot. Scalding fluid and steam may be blown out under pressure.

1. Place a pan below the vehicle to catch the draining coolant.
2. Remove the surge tank cap.
3. Unplug the drain plug.

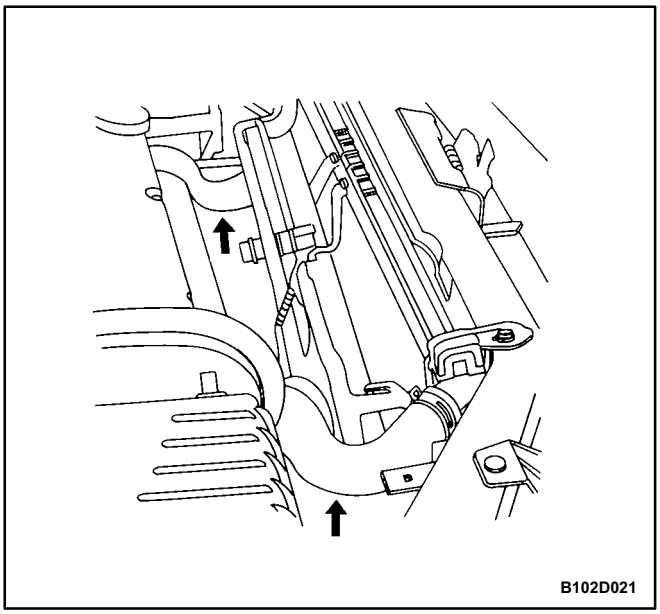

Caution: Dispose of the used coolant in a used coolant holding tank to be picked up with the used oil for disposal. Never pour the used coolant down the drain. Ethylene glycol antifreeze is an extremely toxic chemical. Disposing of it into the sewer sys-tem or the ground water can contaminate the local environment.

4. Catch the escaping fluid in a drain pan.
5. Remove all sludge and dirt from inside the surge tank. Refer to "Surge Tank" in this section.
6. Screw in the drain plug.
7. Add the clean water to the surge tank.
8. Fill the tank slowly so that the upper reservoir hose remains above the water line. This allows the air in-side the cooling system to escape.
9. Start the engine.
10. Run the engine until the thermostat opens. You can tell the thermostat is open when both radiator hoses are hot to the touch.

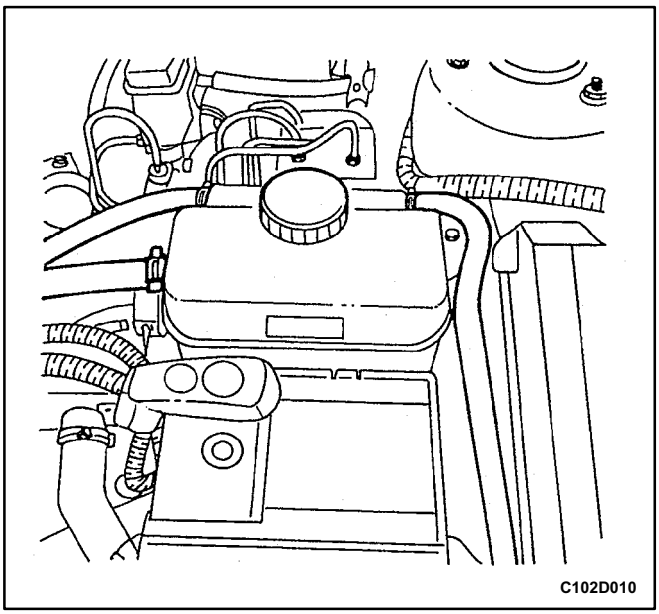

11. Stop the engine.
12. Repeat steps 1 through 9 until the drained water is clear and free of coolant and rust.

Notice: Never use an antifreeze mixture more concen-trated than 60 percent antifreeze to 40 percent water. The solution freezing point increases above this con-centration.

13. Fill the cooling system through the surge tank with a mixture of ethylene glycol antifreeze and water. The mixture must be at least 50 percent antifreeze, but not more than 60 percent antifreeze.
14. Fill the surge tank to the specified MAX fill mark on the outside of the tank.

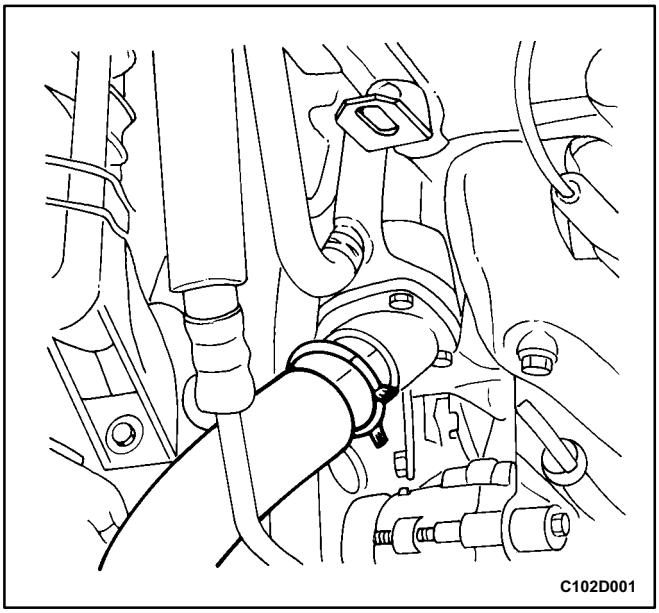

THERMOSTAT

SOHC

Removal Procedure

Caution: To prevent personal injury, do not remove the surge tank cap while the engine and the radiator are hot because the heat causes the system to re-main under pressure. Scalding fluid and steam may be blown out under pressure.

1. Drain the coolant. Refer to Draining and Refilling the Cooling System" in this section.
2. Loosen the hose clamp on the upper radiator hose at the thermostat housing.
3. Disconnect the upper radiator hose from the thermo-stat housing.

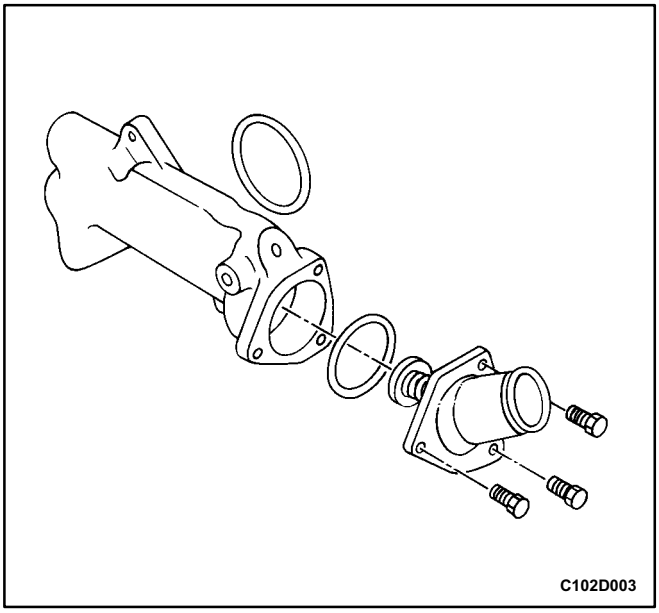

4. Remove the mounting bolts that hold the thermostat housing to the coolant housing.
5. Remove the thermostat housing from the coolant housing.
6. Remove the thermostat from its recess in the coolant housing.
7. Inspect the valve seat for foreign matter that could prevent the valve from seating properly.
8. Inspect the thermostat for proper operation. Refer to Thermostat Test" in this section.
9. Clean the thermostat housing and the coolant hous-ing mating surfaces.

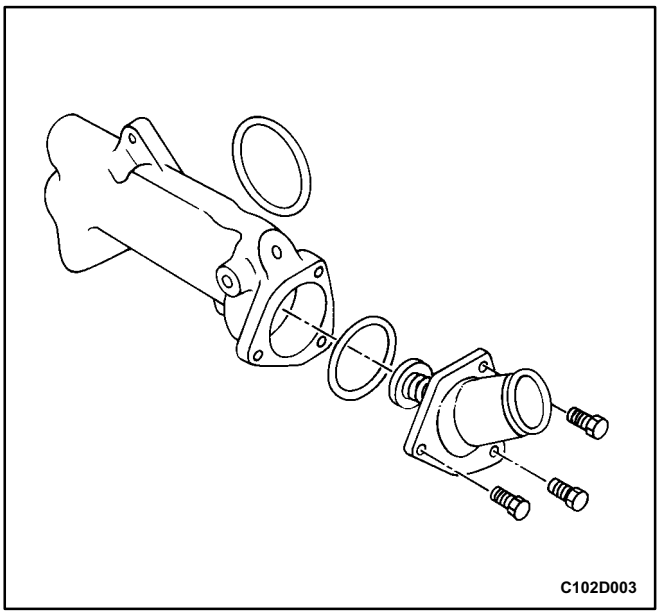

Installation Procedure

1. Install the thermostat into the cylinder head recess.
2. Install the thermostat housing.
3. Secure the thermostat housing to the cylinder head with the mounting bolts.

Tighten

Tighten the thermostat housing mounting bolts to 15 N•m (11 lb•ft).

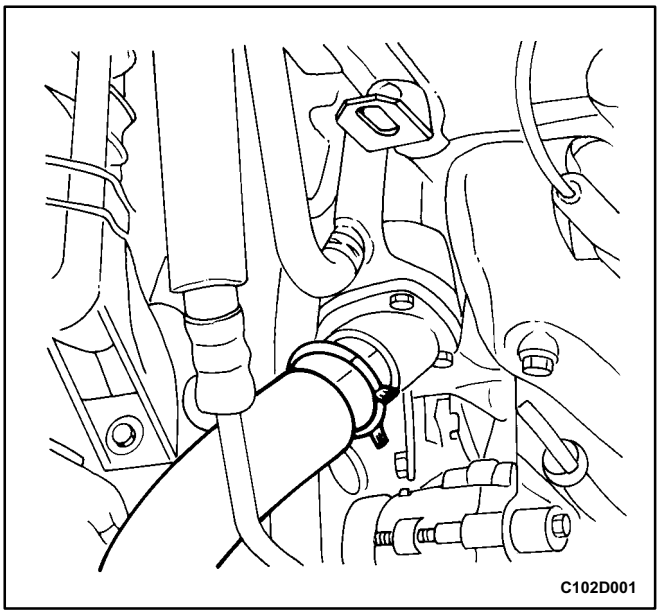

4. Connect the upper radiator hose to the thermostat housing.
5. Secure the upper radiator hose to the thermostat housing with a hose clamp.
6. Refill the engine cooling system. Refer to Draining and Refilling the Cooling System" in this section.

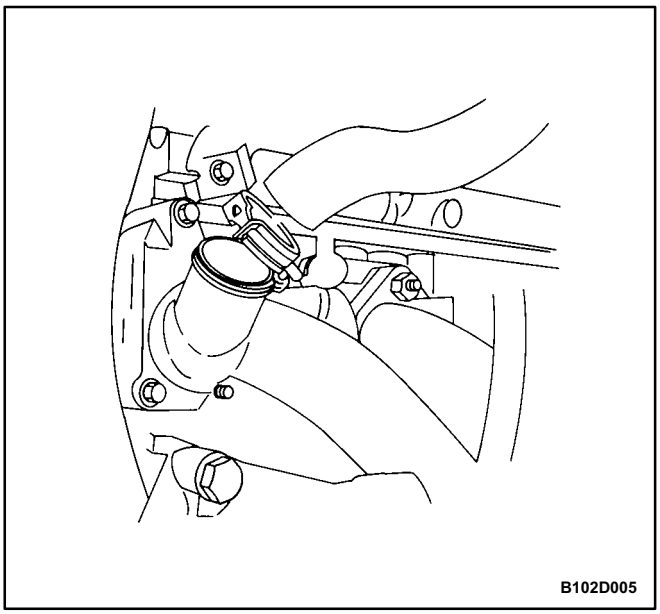

DOHC

Removal Procedure

Caution: To prevent personal injury, do not remove the surge tank cap while the engine and the radiator are hot because the heat causes the system to re-main under pressure. Scalding fluid and steam may be blown out under pressure.

1. Drain the coolant. Refer to Draining and Refilling the Cooling System" in this section.
2. Loosen the hose clamp on the upper radiator hose at the thermostat housing.
3. Disconnect the upper radiator hose from the thermo-stat housing.

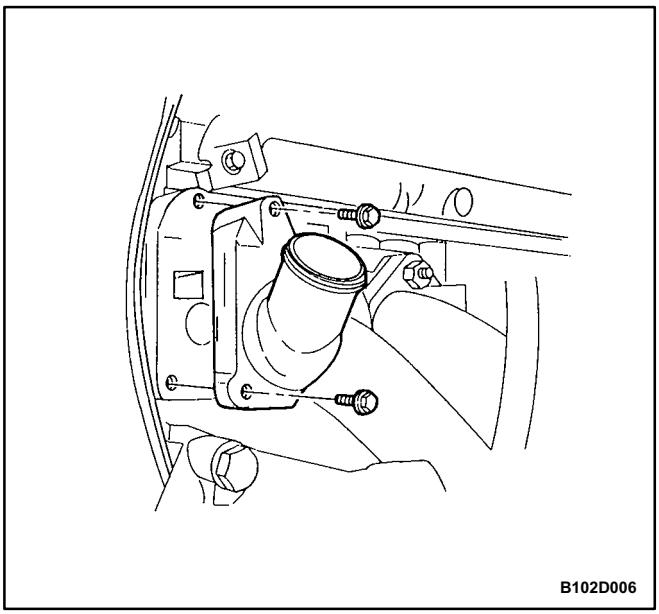

4. Remove the mounting bolts that hold the thermostat housing to the cylinder head.
5. Remove the thermostat housing from the cylinder head.

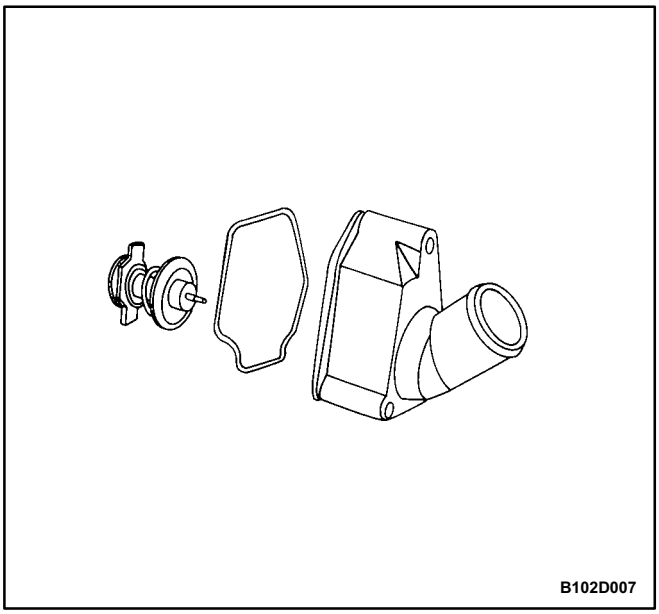

6. Remove the Oring seal from the thermostat housing.
7. Remove the thermostat from the thermostat hous-ing by pressing the thermostat mounting flange downward and then rotating the flange clockwise.
8. Inspect the valve seat for foreign matter that could prevent the valve from sealing properly.
9. Inspect the thermostat for proper operation. Refer to "Thermostat Test" in this section.
10. Clean the thermostat housing and the cylinder head mating surfaces.

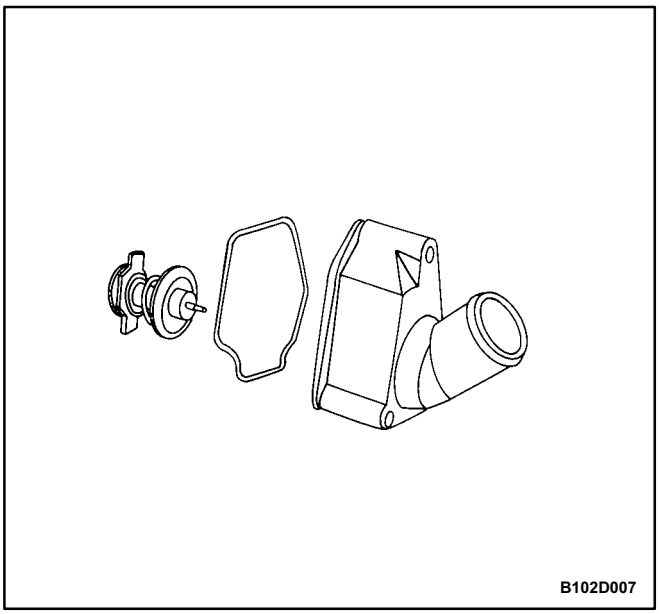

Installation Procedure

1. Install the thermostat into the thermostat housing by pressing the thermostat mounting flange downward and then rotating the flange counterclockwise. Rotate the thermostat mounting flange until it is seated in the thermostat housing recesses.
2. Coat the sealing surface of a new O-ring seal with Lubriplate®.
3. Install a new Oring seal into the recess in the ther-mostat housing.

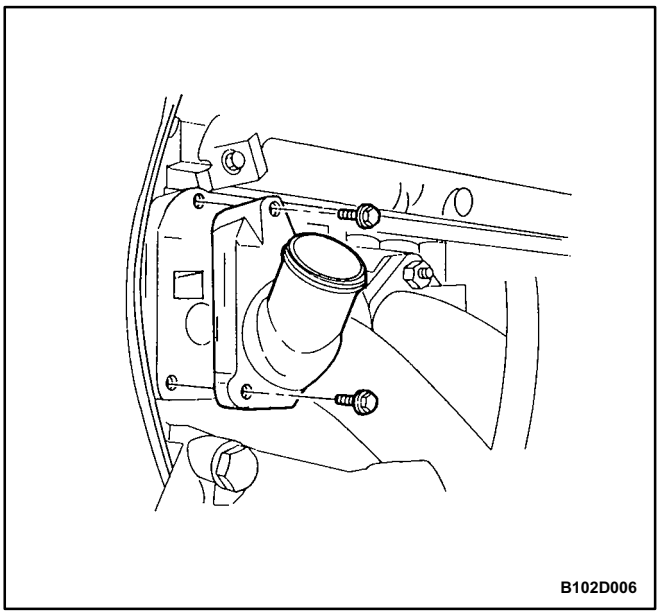

4. Install the thermostat housing to the cylinder head.
5. Secure the thermostat housing to the cylinder head with the mounting bolts.

Tighten

Tighten the thermostat housing mounting bolts to 15 N•m (11 lb•ft).

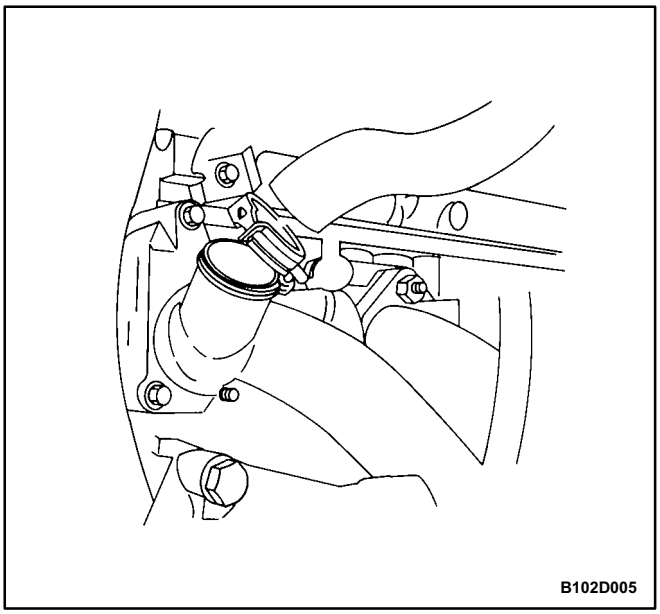

6. Connect the upper radiator hose to the thermostat housing.
7. Secure the upper radiator hose to the thermostat housing with a hose clamp.
8. Refill the engine cooling system. Refer to "Draining and Refilling the Cooling System" in this section.

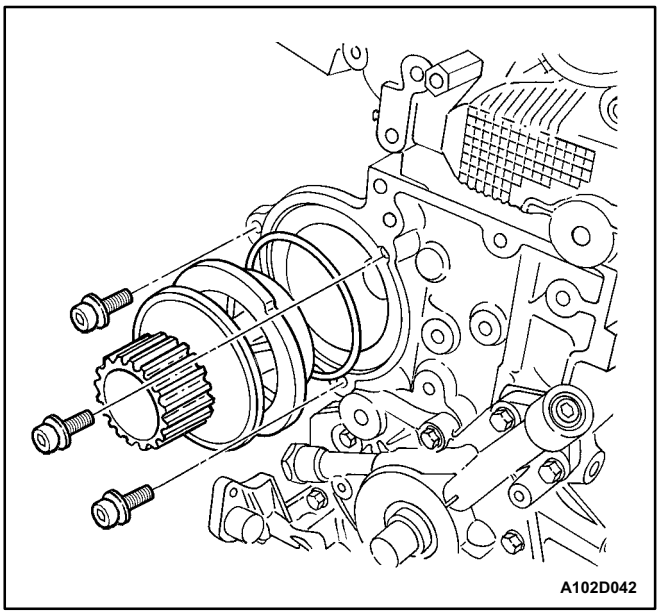

COOLANT PUMP

SOHC

Removal Procedure

1. Drain the engine cooling system to a level below the thermostat housing. Refer to "Draining and Refilling the Cooling System" in this section.
2. Remove the timing belt. Refer to *Section 1B, SOHC Engine Mechanical.*
3. Remove the coolant pump mounting bolts.
4. Remove the coolant pump from the engine block.
5. Remove the ring seal from the coolant pump.

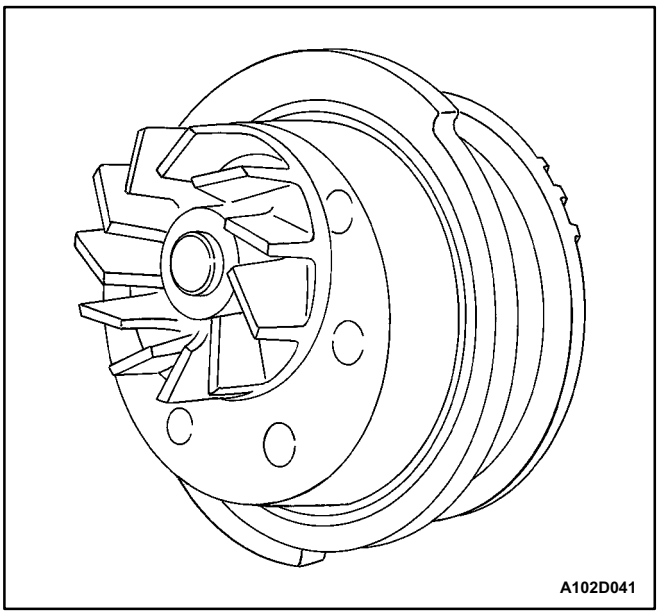

Inspection and Cleaning Procedure

1. Inspect the coolant pump body for cracks and leaks.
2. Inspect the coolant pump bearing for play or abnormal noise.
3. Inspect the coolant pump pulley for excessive wear. If the coolant pump is defective, replace the coolant pump as a unit.
4. Clean the mating surfaces of the coolant pump and the engine block.

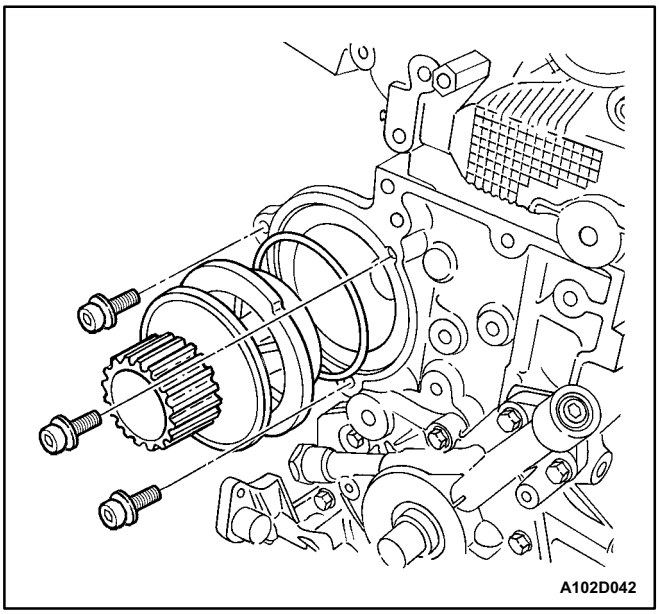

Installation Procedure

1. Install a new ring seal to the coolant pump.
2. Coat the sealing surface of the ring seal with Lubri-plate®.
3. Install the coolant pump to the engine block.
4. Secure the coolant pump to the engine block with the mounting bolts.

Tighten

Tighten the coolant pump mounting bolts to 20 N•m (15 lbft).

5. Install the timing belt. Refer to *Section 1B, SOHC Engine Mechanical*.
6. Refill the engine cooling system. Refer to "Draining and Refilling the Cooling System" in this section.

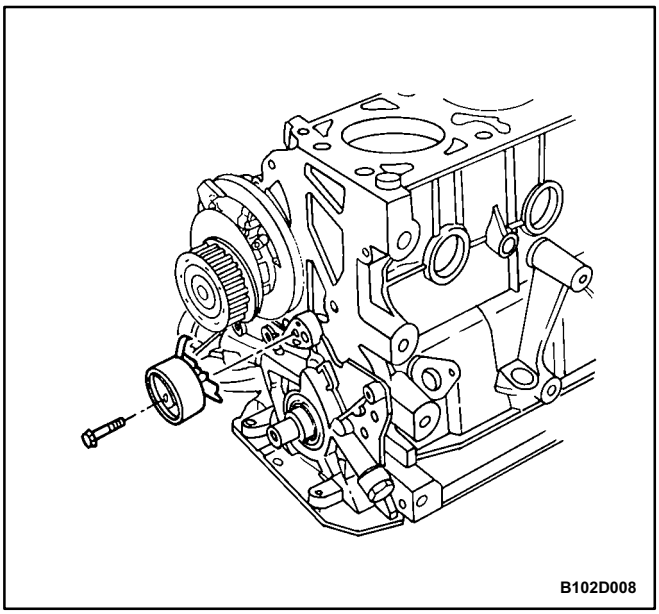

DOHC

Removal Procedure

1. Drain the engine cooling system to a level below the thermostat housing. Refer to "Draining and Refilling the Cooling System" in this section.
2. Remove the timing belt. Refer to *Section 1C, DOHC Engine Mechanical.*
3. Remove the timing belt tension roller retaining bolt.
4. Remove the timing belt tension roller.

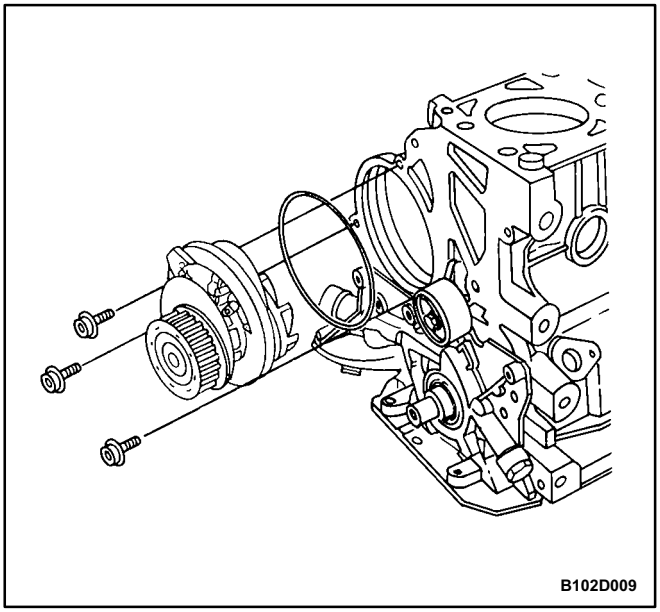

5. Remove the coolant pump mounting bolts.
6. Remove the coolant pump from the engine block.
7. Remove the ring seal from the coolant pump.

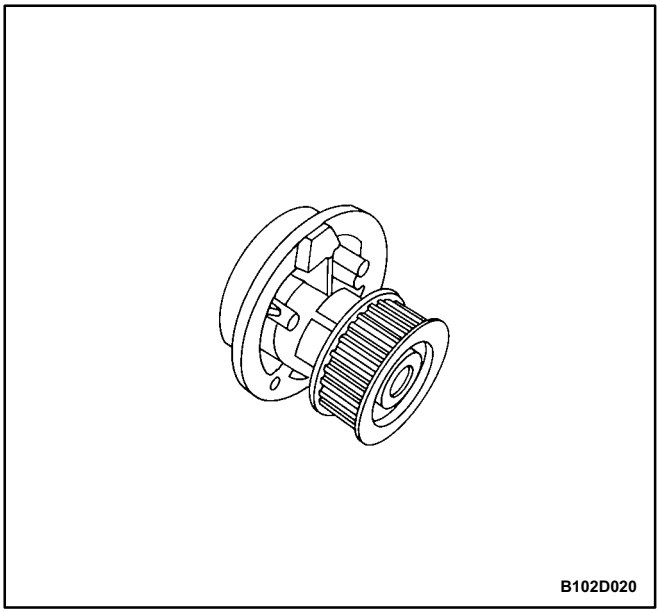

Inspection Cleaning Procedure

1. Inspect the coolant pump body for cracks and leaks.
2. Inspect the coolant pump bearing for play or abnor-mal noise.
3. Inspect the coolant pump pulley for excessive wear. If the coolant pump is defective, replace the coolant pump as a unit.
4. Clean the mating surfaces of the coolant pump and the engine block.

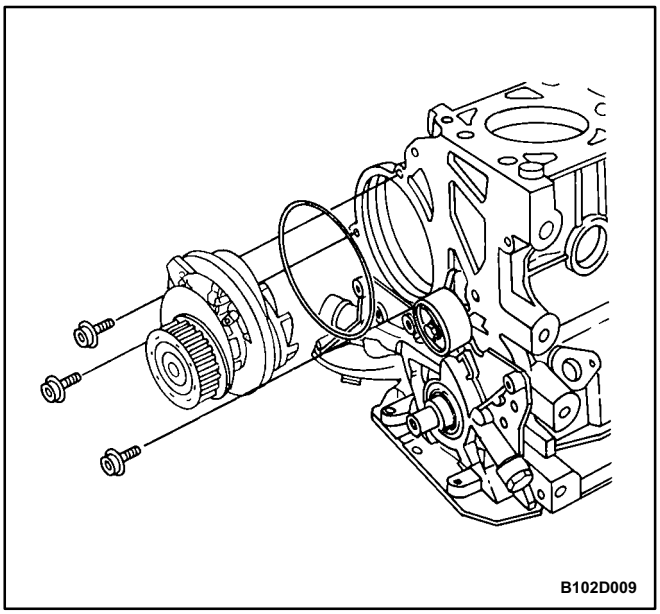

Installation Procedure

1. Install a new ring seal to the coolant pump.
2. Coat the sealing surface of the ring seal with Lubri-plate®.
3. Install the coolant pump to the engine block with the flange aligned with the recess of the rear timing belt cover.
4. Secure the coolant pump to the engine block with the mounting bolts.

Tighten

Tighten the coolant pump mounting bolts to 20 N•m (15 lb•ft).

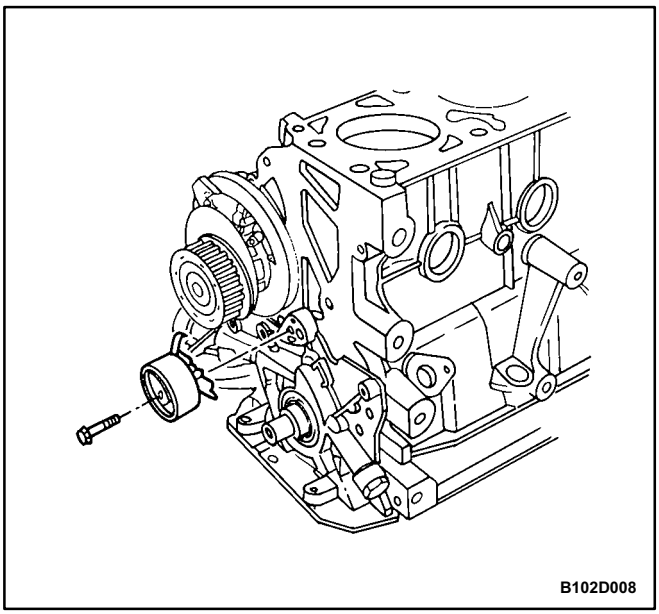

5. Install the timing belt tension roller to the oil pump with the flange inserted into the recess of the oil pump.
6. Install the timing belt tension roller bolt. Do not tighten the bolt at this time.
7. Install the timing belt. Refer to *Section 1C, DOHC Engine Mechanical.*
8. Refill the engine cooling system. Refer to Draining and Refilling the Cooling System" in this section.

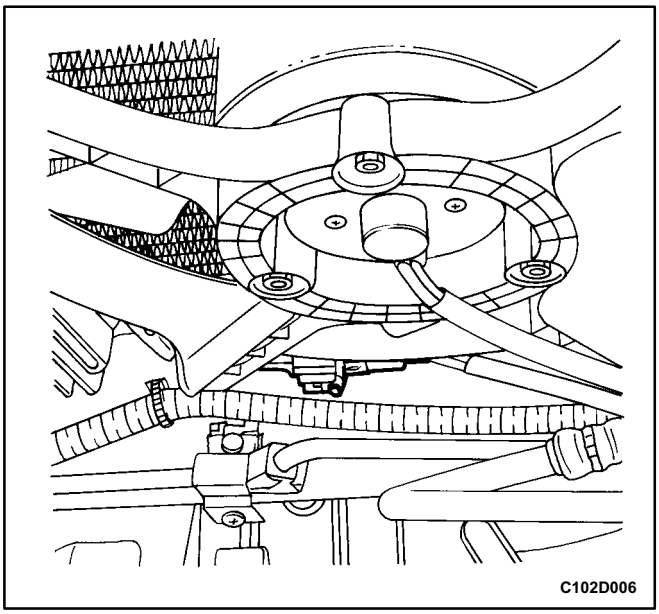

ELECTRIC COOLING FAN - MAIN OR AUXILIARY

Removal Procedure

1. Disconnect the negative battery cable.
2. Disconnect the cooling fan electrical connector.
3. Remove the fan shroud mounting bolts.
4. Lift the fan shroud assembly upward, and remove the fan shroud assembly from the vehicle.

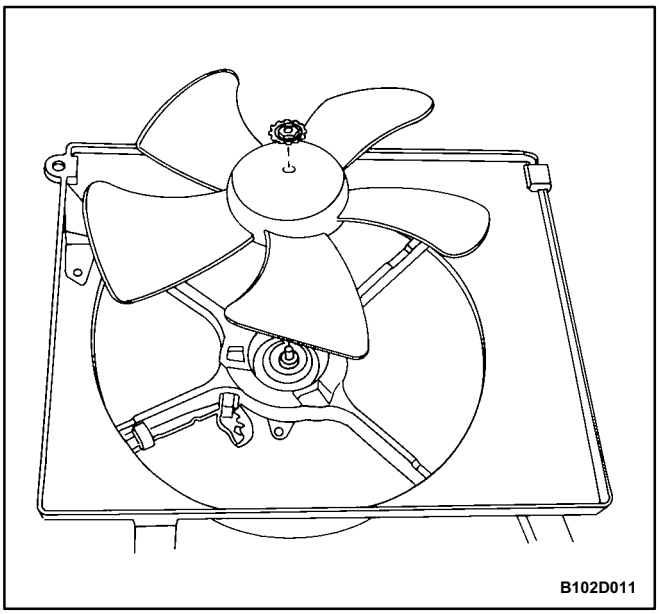

5. Remove the fan blade from the fan shroud assembly by removing the nut at the center of the fan hub.

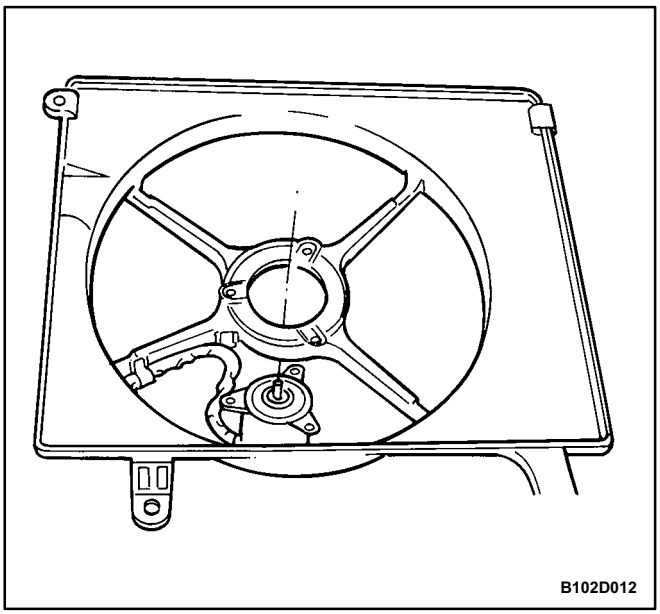

6. Remove the fan motor retaining screws.
7. Remove the fan motor from the shroud.

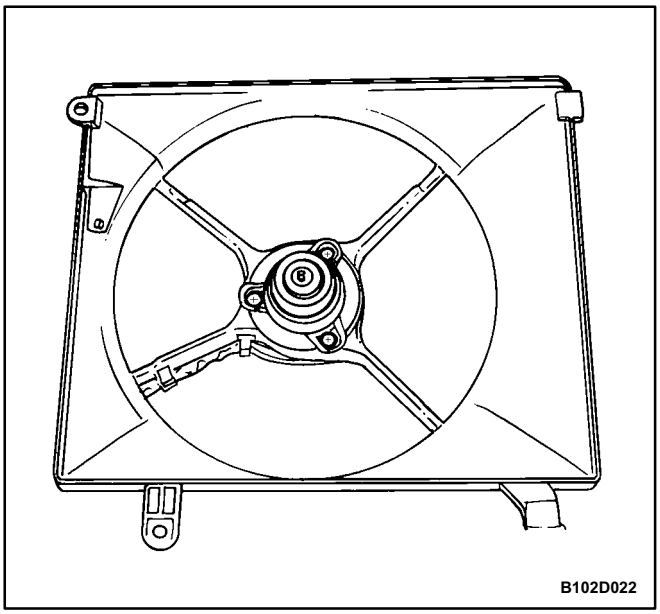

Installation Procedure

Caution: If a fan blade is bent or damaged in any way, no attempt should be made to repair or reuse the damaged part. A bent or damaged fan assembly must be replaced with a new fan assembly. It is es-sential that fan assemblies remain in proper bal-ance. A fan assembly that is not in proper balance can fail and fly apart during use, creating extreme danger. Proper balance cannot be assured on a fan assembly that has been bent or damaged.

1. Install the fan motor to the shroud.
2. Secure the motor to the shroud with the retaining screws.

   Tighten

   Tighten the fan motor retaining screws to 4 N•m (35 lb•in).

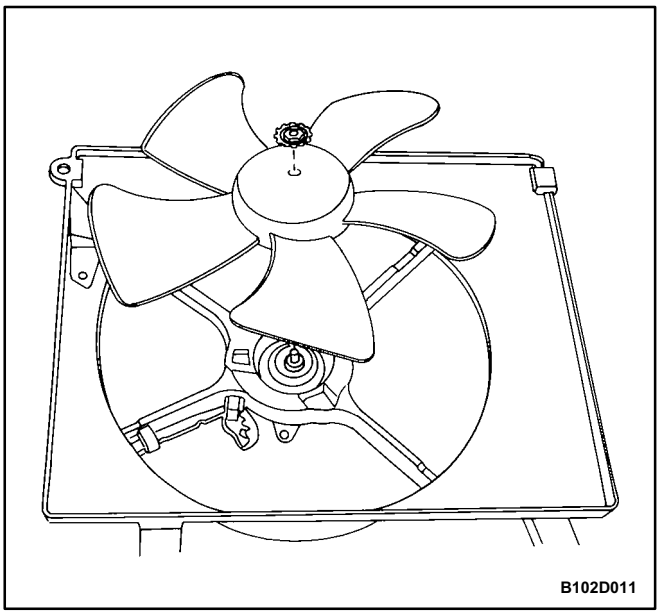

3. Install the fan to the fan shroud assembly with the single nut in the center of the fan hub.

   Tighten

   Tighten the fan motor nut to 3.2 N•m (28 lb•in).

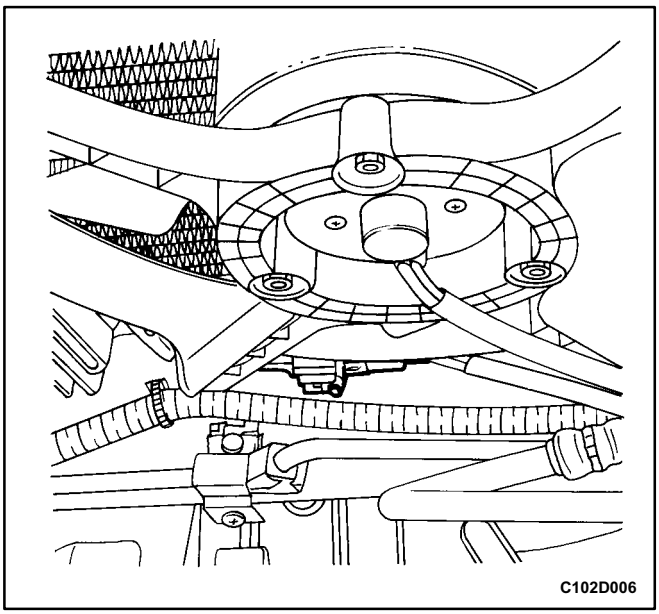

4. Install the fan shroud assembly to the radiator.

Important: Be careful to seat the mounting post on the fan shroud into the socket at the radiator left tank. Be sure to slip the tab at the bottom edge of the shroud into the retaining clip near the center of the radiator.

5. Secure the shroud to the top of the radiator with the mounting bolts.

   Tighten

   Tighten the fan assembly mounting bolts to 4 N•m (35 lb•in).

6. Connect the cooling fan electrical connector.
7. Connect the negative battery cable.

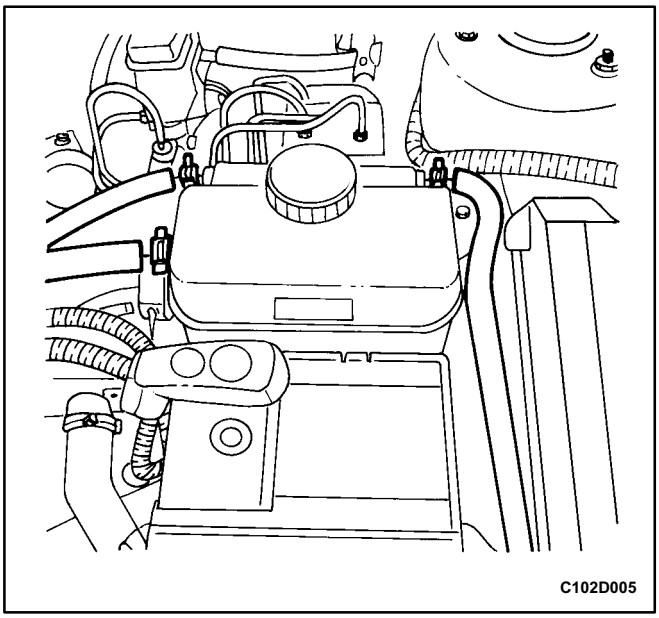

SURGE TANK

Removal Procedure

Caution: To prevent personal injury, do not remove the surge tank cap while the engine and the radiator are hot, because the heat causes the system to re-main under pressure. Scalding fluid and steam may be blown out under pressure.

1. Drain the engine coolant to below the level of the surge tank.
2. Loosen the return hose clamp and disconnect the re-turn hose from the top of the surge tank.
3. Loosen the throttle body hose clamp and disconnect the throttle body hose from the top of the surge tank.
4. Loosen the feed hose clamp and disconnect the feed hose from the bottom of the surge tank.
5. Remove the surge tank attaching bolt.
6. Remove the surge tank from the support mount.
7. Clean the inside and the outside of the surge tank and the surge tank cap with soap and water.
8. Rinse the surge tank and the cap thoroughly.

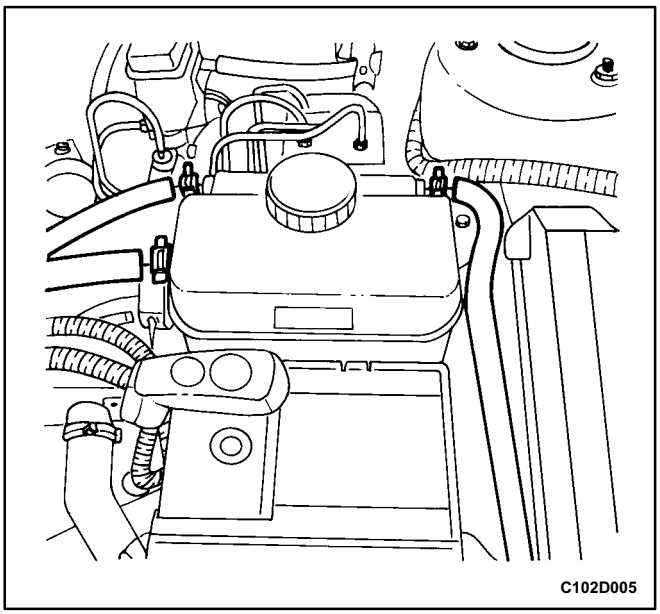

Installation Procedure

1. Install the surge tank to the support mount.
2. Secure the surge tank with the attaching bolt.

Tighten

Tighten the surge tank attaching bolt to 4 N•m (35 lb•in).

3. Connect the return hose and the throttle body hose to the top of the surge tank.
4. Connect the feed hose to the bottom of the surge tank.
5. Secure the return hose, the throttle body hose, and the feed hose to the surge tank with the hose clamps.
6. Fill the surge tank with the coolant to the center ridge, or to the MAX mark.

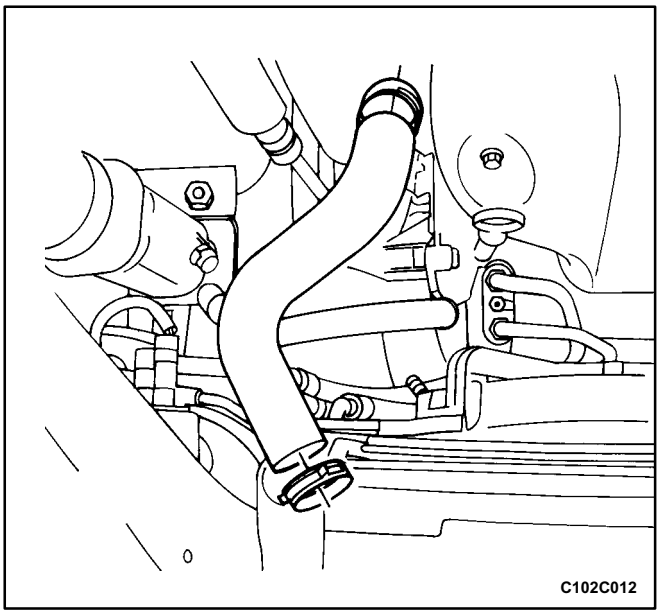

RADIATOR

Removal Procedure

1. Disconnect the negative battery cable.
2. Drain the engine cooling system. Refer to "Draining and Refilling the Cooling System" in this section.
3. Remove the main and the auxiliary cooling fans. Refer to "Electric Cooling Fan - Main or Auxiliary" in this section.
4. Remove the lower radiator hose clamp.
5. Disconnect the lower radiator hose from the radiator.
6. Remove the upper radiator hose clamp.
7. Disconnect the upper radiator hose from the radiator.

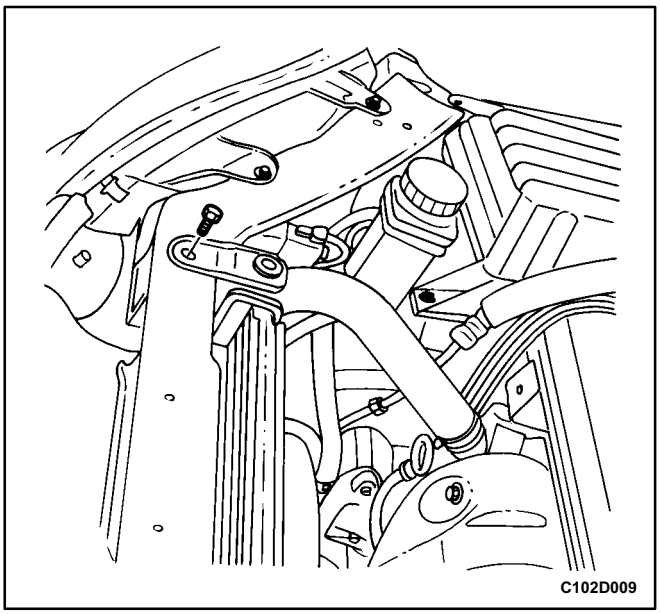

8. Remove the hose clamp from the surge tank hose at the radiator.
9. Disconnect the surge tank hose from the radiator.
10. Disconnect the transaxle fluid cooler pipes from the lower radiator tank, if equipped.
11. Remove the bolt and the transaxle fluid cooler pipe support clamp from the radiator.
12. Remove the left upper radiator retaining bolt.
13. Remove the left upper radiator retaining bracket.

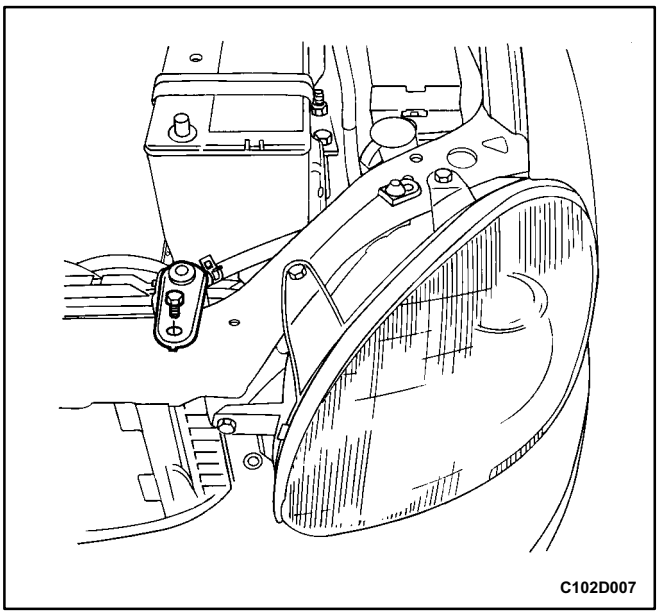

14. Remove the right upper radiator retaining bolt.
15. Remove the right upper radiator retaining bracket.
16. Remove the radiator from the vehicle.

Important: The radiator still contains a substantial amount of coolant. Drain the remainder of the coolant from the radiator into a drain pan.

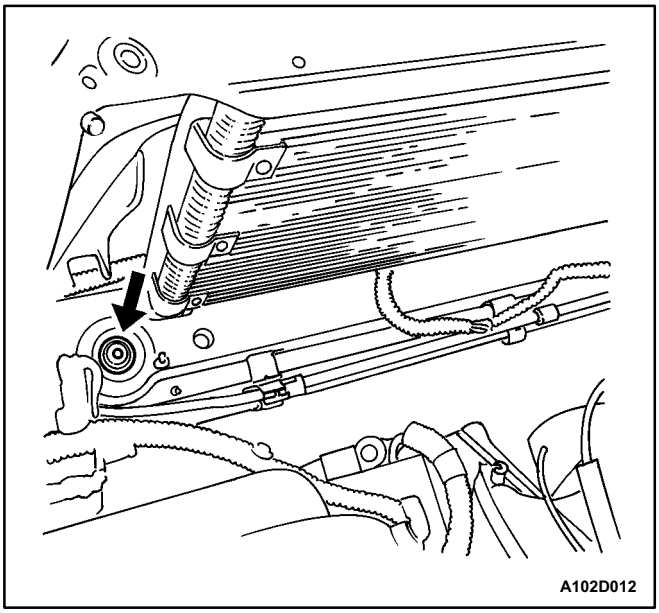

Installation Procedure

1. Set the radiator into place in the vehicle with the ra-diator bottom posts in the rubber shock bumpers.

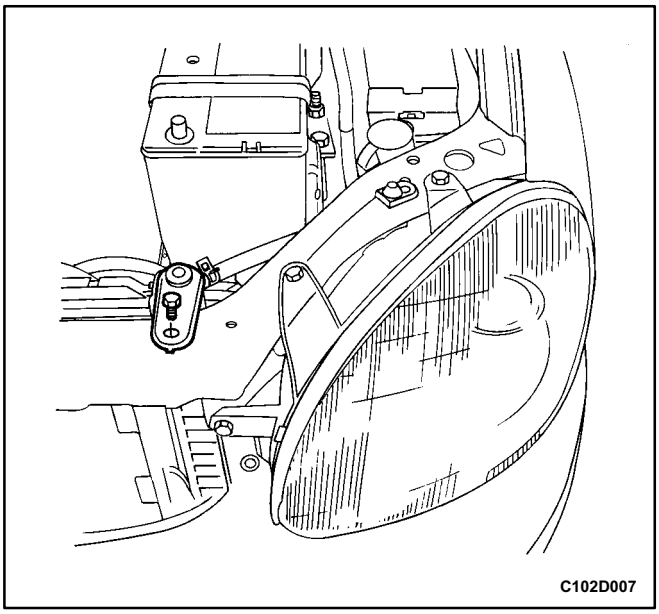

2. Position the radiator retainers in place.
3. Install the right upper radiator retainer bracket.
4. Install the right upper radiator retaining bolt.

Tighten

Tighten the right upper radiator retaining bolt to 4 N•m (35 lb•in).

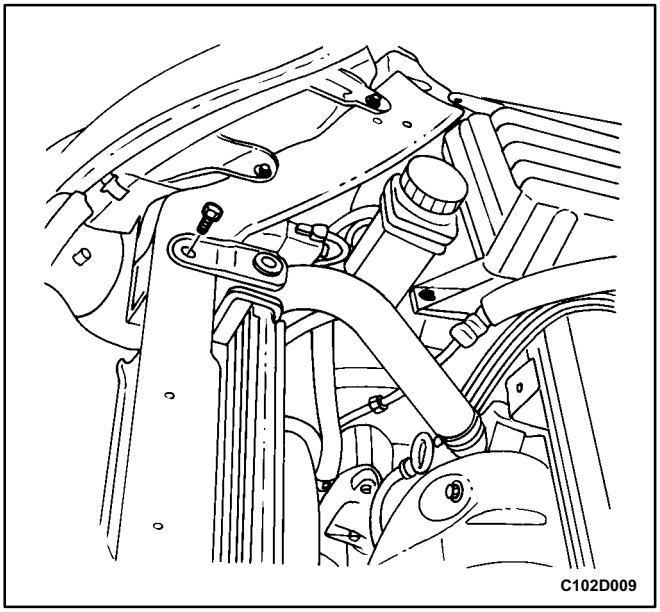

5. Install the left upper radiator retainer bracket.
6. Install the left upper radiator retaining bolt.

Tighten

Tighten the left upper radiator retaining bolt to 4 N•m (35 lb•in).

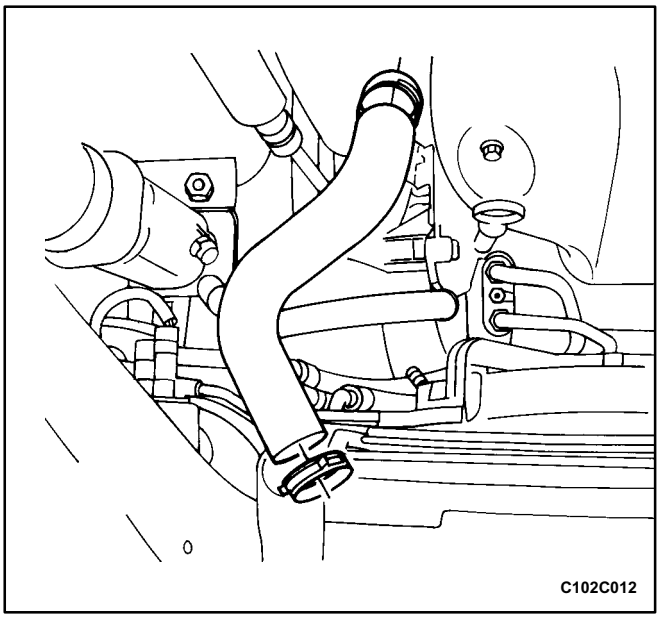

7. Connect the transaxle fluid cooler pipes to the lower radiator tank, if equipped.
8. Install the transaxle fluid cooler pipe and support clamp to the radiator with a bolt.

Tighten

Tighten the transaxle fluid cooler pipe bolt to 22 N•m (16 lb•ft).

9. Connect the surge tank hose to the radiator.
10. Secure the surge tank hose with a hose clamp.
11. Connect the upper radiator hose and the lower ra-diator hose to the radiator.
12. Secure each hose with a hose clamp.
13. Install the main and the auxiliary cooling fans. Refer to "Electric Cooling Fan - Main or Auxiliary" in this section.
14. Refill the engine cooling system. Refer to "Draining and Refilling the Cooling System" in this section.
15. Connect the negative battery cable.

COOLANT TEMPERATURE SENSOR

SOHC

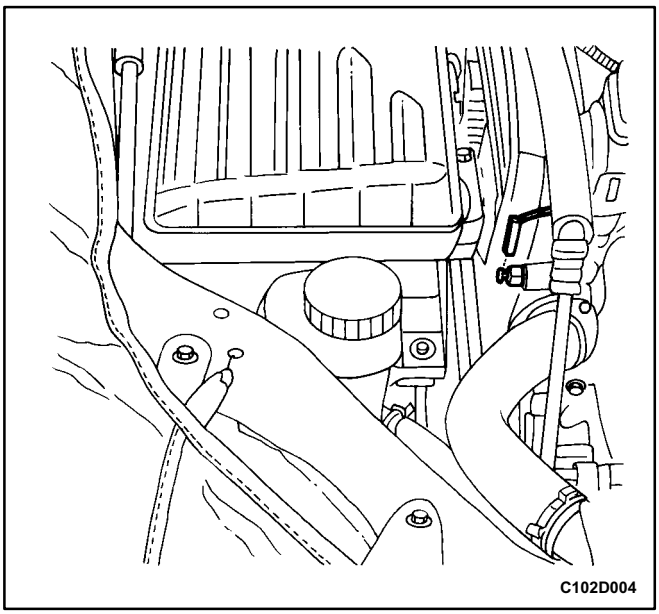

Removal Procedure

1. Disconnect the negative battery cable.
2. Drain the coolant to a level below the coolant tem-perature sensor.
3. Disconnect the electrical connector from the coolant temperature sensor.
4. Remove the temperature sensor from the intake manifold.

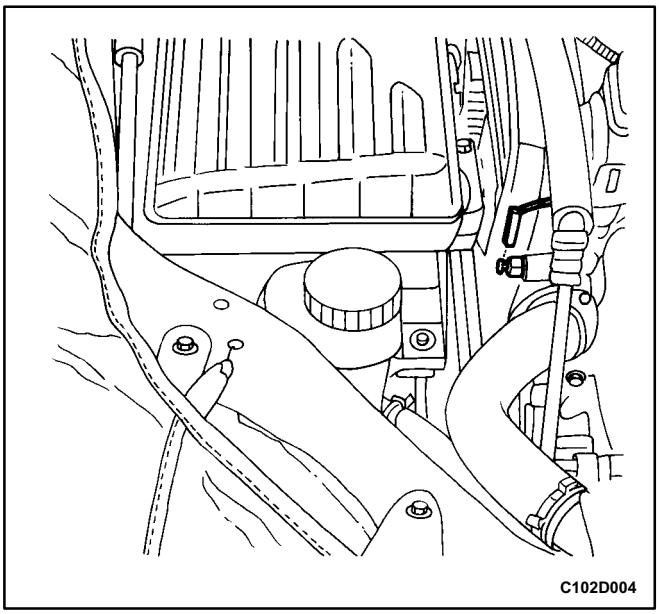

Installation Procedure

1. Install the coolant temperature sensor into the threaded hole in the intake manifold.

   Tighten

   Tighten the coolant temperature sensor to 20 N•m (15 lb•ft).
2. Connect the electrical connector to the coolant tem-perature sensor.
3. Refill the engine cooling system. Refer to Draining and Refilling the Cooling System" in this section.
4. Connect the negative battery cable.

DOHC

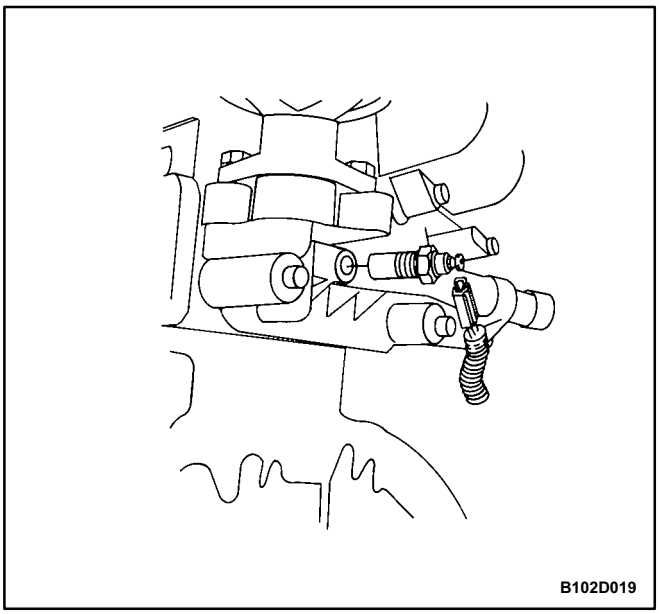

Removal Procedure

1. Disconnect the negative battery cable.
2. Drain the coolant to a level below the coolant tem-perature sensor.
3. Disconnect the electrical connector from the coolant temperature sensor.
4. Remove the temperature sensor from the exhaust gas recirculation (EGR) valve mounting adapter.

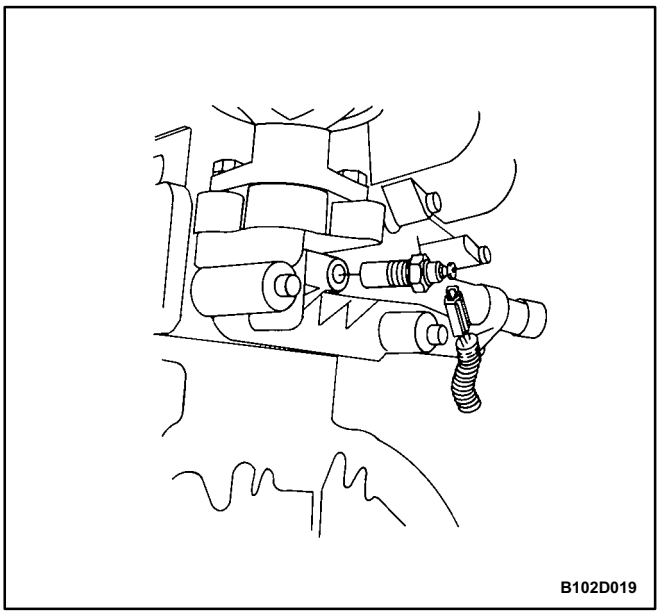

Installation Procedure

1. Install the coolant temperature sensor into the threaded hole in the EGR valve mounting adapter.

   Tighten

   Tighten the coolant temperature sensor to 20 N•m (15 lb•ft).
2. Connect the electrical connector to the coolant tem-perature sensor.
3. Refill the engine cooling system. Refer to Draining and Refilling the Cooling System" in this section.
4. Connect the negative battery cable.

GENERAL DESCRIPTION AND SYSTEM OPERATION

GENERAL DESCRIPTION

The cooling system maintains the engine temperature at an efficient level during all engine operating conditions. When the engine is cold, the cooling system cools the engine slowly or not at all. This slow cooling of the en-gine allows the engine to warm up quickly.

The cooling system includes a radiator and recovery subsystem, cooling fans, a thermostat and housing, a coolant pump, and a coolant pump drive belt. The timing belt drives the coolant pump.

All components must function properly in order for the cooling system to operate. The coolant pump draws the coolant from the radiator. The coolant then circulates through water jackets in the engine block, the intake manifold, and the cylinder head. When the coolant reaches the operating temperature of the thermostat, the thermostat opens. The coolant then goes back to the radiator where it cools.

This system directs some coolant through the hoses to the heater core. This provides for heating and defrost-ing. The surge tank is connected to the radiator to re-cover the coolant displaced by expansion from the high temperatures. The surge tank maintains the correct coolant level.

The cooling system for this vehicle has no radiator cap or filler neck. The coolant is added to the cooling system through the surge tank.

RADIATOR

This vehicle has a lightweight tube-and-fin aluminum radiator. Plastic tanks are mounted on the right and the left sides of the radiator core.

On vehicles equipped with automatic transaxles, the transaxle fluid cooler lines run through the left radiator tank. A radiator drain plug is on this radiator.

To drain the cooling system, open the drain plug.

SURGE TANK

The surge tank is a transparent plastic reservoir, similar to the windshield washer reservoir.

The surge tank is connected to the radiator by a hose and to the engine cooling system by another hose. As the vehicle is driven, the engine coolant heats and ex-pands. The portion of the engine coolant displaced by this expansion flows from the radiator and the engine into the surge tank. The air trapped in the radiator and the engine is degassed into the surge tank.

When the engine stops, the engine coolant cools and contracts. The displaced engine coolant is then drawn back into the radiator and the engine. This keeps the radiator filled with the coolant to the desired level at all times and increases the cooling efficiency.

Maintain the coolant level between the MIN and the MAX marks on the surge tank when the system is cold.

COOLANT PUMP

The belt-driven centrifugal coolant pump consists of an impeller, a drive shaft, and a belt pulley. The coolant pump is mounted on the front of the transverse-mounted engine, and is driven by the timing belt.

The impeller is supported by a completely sealed bear-ing.

The coolant pump is serviced as an assembly and, therefore, cannot be disassembled.

THERMOSTAT

A wax pellet-type thermostat controls the flow of the engine coolant through the engine cooling system. The thermostat is mounted in the thermostat housing to the front of the cylinder head.

The thermostat stops the flow of the engine coolant from the engine to the radiator in order to provide faster warm-up, and to regulate the coolant temperature. The thermostat remains closed while the engine coolant is cold, preventing circulation of the engine coolant through the radiator. At this point, the engine coolant is allowed to circulate only throughout the heater core to warm it quickly and evenly.

As the engine warms, the thermostat opens. This allows the engine coolant to flow through the radiator where the heat is dissipated. This opening and closing of the ther-mostat permits enough engine coolant to enter the ra-diator to keep the engine within proper engine temperature operating limits.

The wax pellet in the thermostat is hermetically sealed in a metal case. The wax element of the thermostat ex-pands when it is heated and contracts when it is cooled.

As the vehicle is driven and the engine warms, the en-gine coolant temperature increases. When the engine coolant reaches a specified temperature, the wax pellet element in the thermostat expands and exerts pressure against the metal case, forcing the valve open. This al-lows the engine coolant to flow through the engine cool-ing system and cool the engine.

As the wax pellet cools, the contraction allows a spring to close the valve.

The thermostat begins to open at 87°C (189°F) and is fully open at 102°C (226°F). The thermostat closes at 86°C (187°F).

ELECTRIC COOLING FAN

Caution: Keep hands, tools, and clothing away from the engine cooling fans to help prevent personal injury. This fan is electric and can turn on whether or not the engine is running.

Caution: If a fan blade is bent or damaged in any way, no attempt should be made to repair or reuse the damaged part. A bent or damaged fan assembly should always be replaced with a new one to pre-vent possible injury.

The cooling fans are mounted behind the radiator in the engine compartment. The electric cooling fans increase the flow of air across the radiator fins and across the condenser on air condition (A/C) equipped vehicles. This helps to speed cooling when the vehicle is at idle or mov-ing at low speeds.

All models have two fans. The main fan is 300 mm (11.8 inches) in diameter with five blades to aid the air flow through the radiator and the condenser. An electric mo-tor attached to the radiator support drives the fan. The auxiliary fan is 300 mm (11.8 inches) in diameter.

- The cooling fans are actuated by the electronic con-trol module (ECM) using a lowspeed cooling fan relay and a highspeed cooling fan relay and a se-ries/parallel cooling fan relay.
- The ECM will turn the cooling fans on at low speed when the coolant temperature reaches 93°C (199°F) and at high speed when the coolant temperature reaches 97°C (207°F).
- The ECM will change the cooling fans from high speed to low speed at 94°C (201°F) and will turn the cooling fans off at 90°C (194°F).

COOLANT TEMPERATURE SENSOR

The coolant temperature sensor (CTS) uses a thermis-tor to control the signal voltage to the electronic control module (ECM).

ENGINE COOLANT TEMPERATURE SENSOR

The engine coolant temperature sensor controls the in-strument panel temperature indicator. The engine cool-ant temperature sensor is located on the intake manifold near the throttle body on an SOHC engine, and on the cylinder head under the intake manifold on a DOHC en-gine.

ENGINE BLOCK HEATER

The vehicle is designed to accept an engine block heat-er. The engine block heater helps warm the engine for improved cold weather starting. It can also help reduce fuel consumption when a cold engine is warming up.

The engine block heater utilizes an existing expansion plug for installation and is located under the intake manifold.

Contact your Daewoo dealer for further information or installation.

SECTION 1E

ENGINE ELECTRICAL

CAUTION: Disconnect the negative battery cable before removing or installing any electrical unit or when a tool or equipment could easily come in contact with exposed electrical terminals. Disconnecting this cable will help prevent personal injury and damage to the vehicle. The ignition must also be in LOCK unless otherwise noted.

TABLE OF CONTENTS

Specifications 1E-1
Starter Specifications 1E-1
Generator Specifications 1E-2
Battery Specifications 1E-2
Fastener Tightening Specifications 1E-2
Schematic and Routing Diagrams 1E-3
Starting System 1E-3
Charging System 1E-4
Diagnosis 1E-5
No Crank 1E-5
Starter Motor Noise 1E-8
Battery Load Test 1E-8
Generator Output Test 1E-9
Generator System Check 1E-9
Maintenance and Repair 1E-10
On-Vehicle Service 1E-10
Generator - 95 Amp 1E-10
Starter - PG 150S 1E-13
Battery/Battery Tray 1E-14
Unit Repair 1E-17
Starter Motor 1E-17
Generator 1E-27
General Description and System Operation 1E-35
Battery 1E-35
Ratings 1E-35
Reserve Capacity 1E-35
Cold Cranking Amperage 1E-35
BuiltIn Hydrometer 1E-35
Charging Procedure 1E-35
Charging Time Required 1E-36
Charging a Completely Discharged Battery (Off the Vehicle) 1E-36
Jump Starting Procedure 1E-36
Generator 1E-37
Charging System 1E-37
Starter 1E-37
Starting System 1E-37

SPECIFICATIONS

STARTER SPECIFICATIONS

Application	Description
Starter	
No-Load Test @ 12.2 Volts	40-90 amps
Drive Pinion Speed	3,200-4,800 rpm
Solenoid	
Hold-in Windings @ 12.2 Volts	12-20 amps
Pull-in Windings @ 12.2 Volts	60-90 amps

GENERATOR SPECIFICATIONS

Application	Description
Type	CS-128D

BATTERY SPECIFICATIONS

Application	Description
Cold Cranking Amps	550 amps (Cold Area : 610 amps)
Reserve Capacity Minimum	90 minutes
Load Test	270 amps
Replacement	85B-60
Minimum Voltage:	Estimated Temperature:
9.6	21°C (69.8°F)
9.4	20°C (68°F)
9.1	0°C (32°F)
8.8	-10°C (14°F)
8.5	-18°C (0°F)
8.0	Below -18°C (Below 0°F)

FASTENER TIGHTENING SPECIFICATIONS

Application	N•m	Lb•Ft	Lb•In
Battery Cable Nuts	15	11	-
Battery Carrier Tray Lower Bolts	10	-	89
Battery Carrier Tray Upper Bolts	20	15	-
Battery Retainer Clamp-to-Battery Rod Nuts	4	-	35
Battery Terminal Bolt	20	15	-
Battery-to-Generator Lead Nut	15	11	-
Generator Driveshaft Nut	100	74	-
Generator Lower Bracket-to-Engine Block Bolts	30	22	-
Generator Lower Bracket-to-Generator Nut	20	15	-
Generator Through Bolts	25	18	-
Generator-to-Cylinder Head Support Bracket Bolt	20	15	-
Generator-to-Intake Manifold and Cylinder Head Support Bracket Bolts	35	26	-
Generator-to-Intake Manifold Strap Bracket Bolt	20	15	-
Intake Manifold-to-Engine Block Bracket Bolts (Over Starter)	20	15	-
Starter Field Connector Nut	8	-	71
Starter Solenoid Assembly Screws	8	-	71
Starter Solenoid Terminal-to-Battery Cable Terminal Nut	7	-	62
Starter Solenoid Terminal-to-Ignition Solenoid Terminal Nut	6	-	53
Starter Through Bolts	6	-	53
Starter-to-Engine Block Mounting Bolt	45	33	-
Starter-to-Transmission Mounting Bolt	50	37	-

SCHEMATIC AND ROUTING DIAGRAMS

STARTING SYSTEM

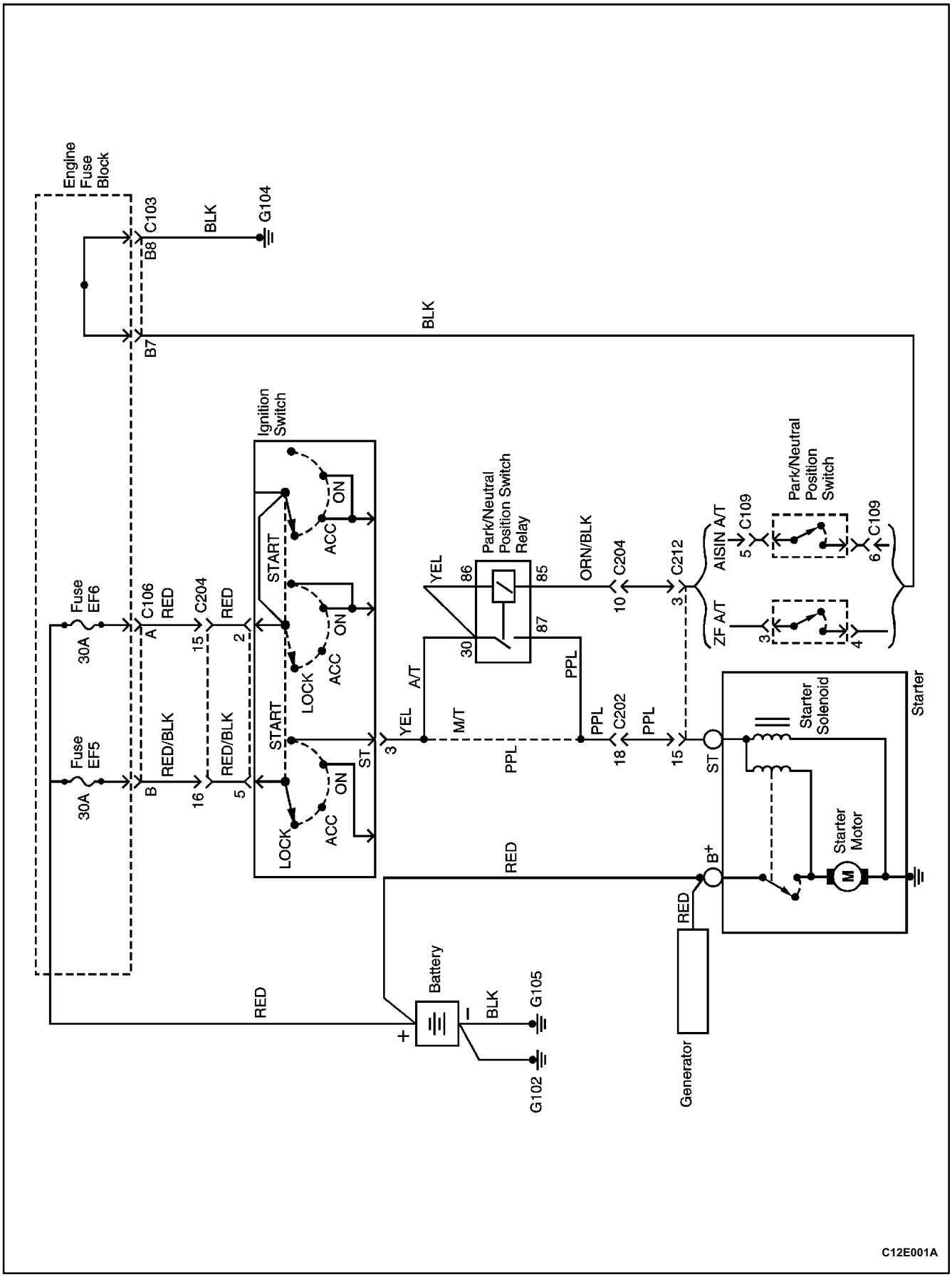

C12E001A

CHARGING SYSTEM

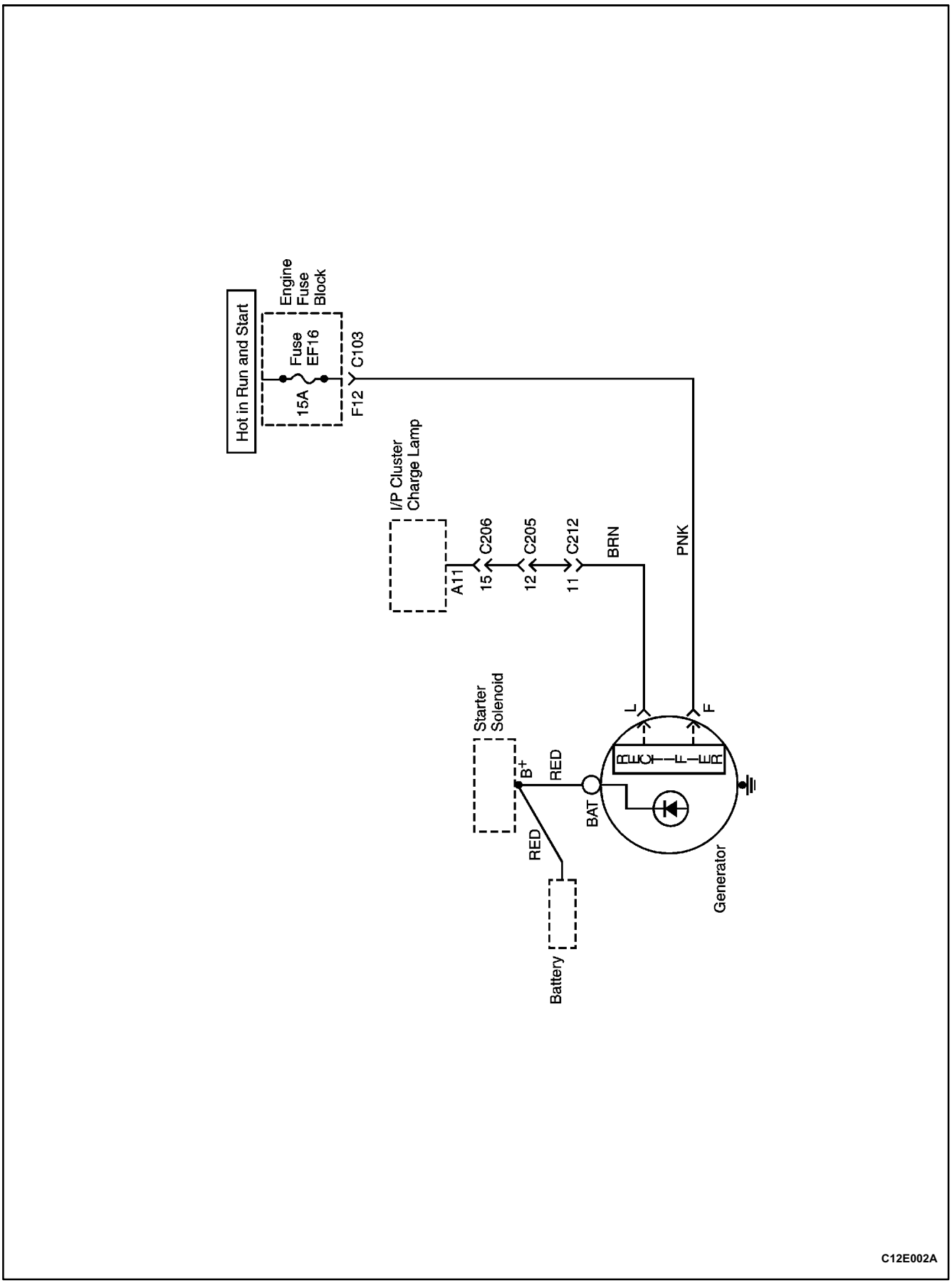

DIAGNOSIS

NO CRANK

Step	Action	Value	Yes	No
1	1. Turn the headlamps ON. 2. Turn the dome lamps ON. 3. Turn the ignition to START. Did the lights dim or go out?	-	Go to *Step 2*	Go to *Step 8*
2	Check the battery state of charge. Is the green eye showing from the built-in hydrometer?	-	Go to *Step 3*	Go to ``Charging Procedure''
3	1. Connect the voltmeter positive lead to the positive battery terminal. 2. Connect the voltmeter negative lead to the negative battery terminal. 3. Turn the ignition to START. Does the voltmeter indicate the value specified?	< 9.6 V	Go to ``Charging Procedure''	Go to *Step 4*
4	1. Connect the voltmeter negative lead to the negative battery terminal. 2. Connect the positive voltmeter lead to the engine block. Does the voltmeter indicate the value specified?	> 0.5 V	Go to *Step 5*	Go to *Step 6*
5	Clean, tighten, or replace the negative battery cable. Is the repair complete?	-	System OK	-
6	1. Connect the voltmeter positive lead to the starter B" terminal. 2. Connect the voltmeter negative lead to the negative battery terminal. Does the voltmeter indicate the value specified?	< 9 V	Go to *Step 7*	Go to *Step 13*
7	Clean, tighten, or replace the positive battery cable. Is the repair complete?	-	System OK	-
8	Inspect the engine fuse block fuse EF5. Is the fuse OK?	-	Go to *Step 10*	Go to *Step 9*
9	Replace the fuse EF6. Is the repair complete?	-	System OK	-
10	Check the connection at the starter ST" terminal. Is the connection OK?	-	Go to *Step 12*	Go to *Step 11*
11	Clean or tighten the connection as needed. Is the repair complete?	-	System OK	-
12	1. Connect the voltmeter positive lead to the starter ST" terminal. 2. Connect the voltmeter negative lead to the negative battery terminal. 3. Turn the ignition to START. Does the voltmeter indicate the value specified?	> 7 V	Go to *Step 13*	Go to *Step 14*
13	Repair or replace the starter as needed. Is the repair complete?	-	System OK	-
14	Determine the type of transaxle on the vehicle. Is the vehicle equipped with an automatic transmission?	-	Go to *Step 15*	Go to *Step 32*

NO CRANK (Continued)

Step	Action	Value	Yes	No
15	1. Disconnect the Park Neutral (P/N) position switch relay. 2. Connect the negative voltmeter lead to the P/N relay connector terminal 86. 3. Connect the positive voltmeter lead to battery positive. Does the voltmeter indicate the value specified?	11-14 V	Go to *Step 20*	Go to *Step 16*
16	1. Disconnect the P/N position switch. 2. Connect the negative voltmeter lead to the P/N position switch connector terminal 4. 3. Connect the positive voltmeter lead to battery positive. Does the voltmeter indicate the value specified?	11-14 V	Go to *Step 17*	Go to *Step 25*
17	1. Jumper the P/N position switch connector terminals 3 and 4. 2. Connect the negative voltmeter lead to the P/N relay connector terminal 86. 3. Connect the positive voltmeter lead to battery positive. Does the voltmeter indicate the value specified?	11-14 V	Go to *Step 18*	Go to *Step 19*
18	Replace the neutral safety backup switch. Is the repair complete?	-	System OK	-
19	Repair the open wire between the P/N position switch connector terminal 3 and the P/N back-up relay connector terminal 85. Is the repair complete?	-	System OK	-
20	1. Connect the positive voltmeter lead to the P/N back-up relay connector terminal 30. 2. Connect the voltmeter negative lead to ground. 3. Turn the ignition to START. Does the voltmeter indicate the value specified?	11-14 V	Go to *Step 21*	Go to *Step 27*
21	1. Connect the positive voltmeter lead to the NSBU relay connector terminal 86. 2. Connect the voltmeter negative lead to ground. 3. Turn the ignition to START. Does the voltmeter indicate the value specified?	11-14 V	Go to *Step 22*	Go to *Step 26*
22	1. Jumper connector terminals 30 and 87 of the P/N relay. 2. Turn the ignition to START. Does the starter crank?	-	Go to *Step 31*	Go to *Step 23*
23	Check for an open in the wire between the P/N relay connector terminal 87 and the starter "ST" terminal. Is the problem found?	-	Go to *Step 24*	Go to *Step 13*
24	Repair the wire as needed. Is the repair complete?	-	System OK	-
25	Repair the open wire between the P/N position switch connector terminal 4 and ground. Is the repair complete?	-	System OK	-

NO CRANK (Continued)

Step	Action	Value	Yes	No
26	Repair the open wire between the P/N relay connector terminal 86 and the ignition switch connector terminal 3. Is the repair complete?	-	System OK	-
27	1. Connect the voltmeter positive lead to the ignition switch connector terminal 5 by backprobing the connector. 2. Connect the voltmeter negative lead to ground. Does the voltmeter indicate the value specified?	11-14 V	Go to *Step 29*	Go to *Step 28*
28	Repair the open in the wiring between the engine block fuse EF5 and the ignition switch connector terminal 5. Is the repair complete?	-	System OK	-
29	1. Connect the voltmeter positive lead to the ignition switch connector terminal 3 by backprobing the connector. 2. Connect the voltmeter negative lead to ground. 3. Turn the ignition to START. Does the voltmeter indicate the value specified?	11-14 V	Go to *Step 30*	Go to *Step 36*
30	Repair the open in the wiring between the ignition switch connector terminal 3 and the P/N relay connector terminal 30. Is the repair complete?	-	System OK	-
31	Replace the P/N relay. Is the repair complete?	-	System OK	-
32	1. Connect the voltmeter positive lead to the ignition switch connector terminal 5 by backprobing the connector. 2. Connect the voltmeter negative lead to ground. Does the voltmeter indicate the value specified?	11-14 V	Go to *Step 34*	Go to *Step 33*
33	Repair the open in the wiring between the engine block fuse EF5 and the ignition switch connector terminal 5. Is the repair complete?	-	System OK	-
34	1. Connect the voltmeter positive lead to the ignition switch connector terminal 3 by backprobing the connector. 2. Connect the voltmeter negative lead to ground. 3. Turn the ignition to START. Does the voltmeter indicate the value specified?	11-14 V	Go to *Step 35*	Go to *Step 36*
35	Repair the open in the wiring between the ignition switch connector terminal 3 and the starter "ST" terminal. Is the repair complete?	-	System OK	-
36	Replace the ignition switch. Is the repair complete?	-	System OK	-

STARTER MOTOR NOISE

To correct starter motor noise during starting, use the following procedure:

Checks	Action
Check for a high-pitched whine during cranking before the engine fires. The engine cranks and fires properly.	The distance is too great between the starter pinion and the flywheel. Shimming the starter toward the flywheel is required.
Check for a high-pitched whine after the engine fires, as the key is being released. The engine cranks and fires properly. This intermittent complaint is often diagnosed as ``starter hang-in" or ``solenoid weak."	The distance is too small between the starter pinion and the flywheel. Shimming the starter away from the flywheel is required.
Check for a loud ``whoop" after the engine fires but while the starter is still held engaged. The sound is like a siren if the engine is revved while the starter is engaged.	The most probable cause is a defective clutch. A new clutch will often correct this problem.
Check for a ``rumble," a ``growl," or, in severe cases, a ``knock" as the starter is coasting down to a stop after starting the engine.	The most probable cause is a bent or an unbalanced starter armature. A new armature will often correct this problem.

If the complaint is noise, correction can be achieved by proper shimming as follows:

1. Check for a bent or a worn flywheel.
2. Start the engine and carefully touch the outside diameter of the rotating flywheel ring gear with chalk or a crayon to show the high point of the tooth runout. Turn the engine OFF and rotate the flywheel so that the marked teeth are in the area of the starter pinion gear.
3. Disconnect the negative battery cable to prevent the cranking of the engine.
4. Check the pinion-to-flywheel clearance by using a wire gauge of 0.5 mm (0.02 inch) minimum thickness or diameter. Center a pinion tooth between two flywheel teeth and the gauge. Do not gauge in the corners where a misleading larger dimension may be observed. If the clearance is under this minimum, shim the starter away from the flywheel.
5. If the clearance approaches 1.5 mm (0.06 inch) or more, shim the starter toward the flywheel. This condition is generally the cause of broken flywheel teeth or the starter housing. Shim the starter toward the flywheel by shimming only the outboard starter mounting pad. A shim of 0.40 mm (0.016 inch) thickness at this location will decrease the clearance by approximately 0.30 mm (0.012 inch). If normal starter shims are not available, plain washers or other suitable material may be used as shims.

BATTERY LOAD TEST

1. Check the battery for obvious damage, such as a cracked or broken case or cover, which could permit the loss of electrolyte. If damage is obvious, replace the battery.

Caution: Do not charge the battery if the hydrometer is clear or light yellow. Instead, replace the battery. If the battery feels hot or if violent gassing or spewing of electrolyte through the vent hole occurs, discontinue charging or reduce the charging rate to avoid personal injury.

Important: The battery temperature must be estimated by touch, taking into consideration the ambient temperature to which the battery has been exposed for the preceding few hours.

2. Check the hydrometer. If the green dot is visible, go to the load test procedure. If the indicator is dark but green is not visible, charge the battery. For charging a battery removed from the vehicle, refer to Charging a Completely Discharged Battery" in this section.
3. Connect a voltmeter and a battery load tester across the battery terminals.
4. Apply a 300 ampere load for 15 seconds to remove the surface charge from the battery.
5. Remove the load.
6. Wait 15 seconds to let the battery recover.
7. Apply a 270 ampere load.
8. If the voltage does not drop below the minimum listed, the battery is good and should be reinstalled. If the voltage is less than the minimum listed, replace the battery. Refer to Battery Specifications" in this section.

GENERATOR OUTPUT TEST

1. Perform the generator system test. Refer to "Generator System Check" in this section.
2. Replace the generator if it fails that test. Refer to "Generator" in the On-Vehicle Service portion of this section.
3. If the generator passes the test, perform the on-vehicle output test which follows.

Important: Always check the generator for output before assuming that a grounded "L" terminal circuit has damaged the regulator.

4. Attach a digital multimeter, an ammeter, and a carbon pile load to the vehicle.

Important: Be sure the vehicle battery is fully charged, and the carbon pile load is turned off.

5. With the ignition switch in the off position, check and record the battery voltage.
6. Remove the harness connector from the generator.
7. Turn the ignition switch to the RUN position with the engine not running.
8. Use a digital multimeter to check for voltage in the harness connector "L" terminal. The reading should be near the specified battery voltage of 12 volts.
9. If the voltage is too low, check the indicator "L" terminal circuits for open and grounded circuits causing voltage loss. Correct any open wires, terminal connections, etc., as necessary. Refer to "Charging System" in this section.
10. Attach the generator harness connector.
11. Run the engine at a moderate idle, and measure the voltage across the battery terminals. The reading should be above that recorded in step 15 but less than 16 volts. If the reading is over 16 volts or below the previous reading, replace the generator. Refer to "Generator" in the On-Vehicle Service portion of this section.
12. Run the engine at a moderate idle, and measure the generator amperage output.
13. Turn on the carbon pile, and adjust it to obtain the maximum amps while maintaining the battery voltage above 13 volts. If the reading is within 15 amps of the generator's rating listed on the generator, the generator is good. If not, replace the generator. Refer to "Generator" in the On-Vehicle Service portion of this section.
14. With the generator operating at the maximum output, measure the voltage between the generator housing and the battery negative terminal. The voltage drop should be 0.5 volt or less. If the voltage drop is more than 0.5 volt, check the ground path from the generator housing to the negative battery cable.
15. Check, clean, tighten, and recheck all of the ground connections.

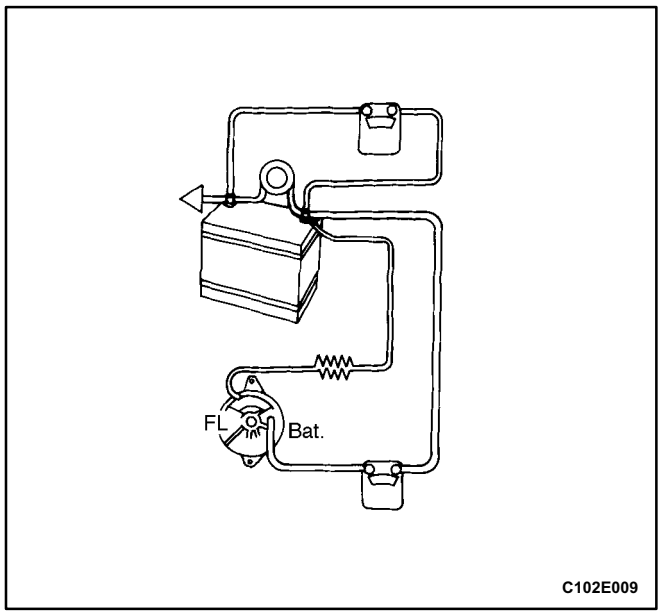

GENERATOR SYSTEM CHECK

When operating normally, the generator indicator lamp will come on when the ignition switch is in the RUN position and go out when the engine starts. If the lamp operates abnormally or if an undercharged or overcharged battery condition occurs, the following procedure may be used to diagnose the charging system. Remember that an undercharged battery is often caused by accessories being left on overnight or by a defective switch that allows a lamp, such as a trunk or a glove box lamp, to stay on.

Diagnose the generator with the following procedure:

1. Visually check the belt and the wiring.
2. With the ignition switch in the RUN position and the engine stopped, the charge indicator lamp should be on. If not, detach the harness at the generator and ground the ``L" terminal in the harness with a 5-ampere fused jumper lead.
   - If the lamp lights, replace the generator. Refer to "Generator" in the On-Vehicle Service portion of this section.
   - If the lamp does not light, locate the open circuit between the ignition switch and the harness connector. The indicator lamp bulb may be burned out.
3. With the ignition switch in the RUN position and the engine running at moderate speed, the charge indicator lamp should be off. If not, detach the wiring harness at the generator.
   - If the lamp goes off, replace the generator. Refer to "Generator" in the On-Vehicle Service portion of this section.
   - If the lamp stays on, check for a short to ground in the harness between the connector and the indicator lamp.

Important: Always check the generator for output before assuming that a grounded ``L" terminal circuit has damaged the regulator. Refer to "Generator" in the Unit Repair portion of this section.

MAINTENANCE AND REPAIR

ON-VEHICLE SERVICE

GENERATOR - 95 AMP

Removal Procedure

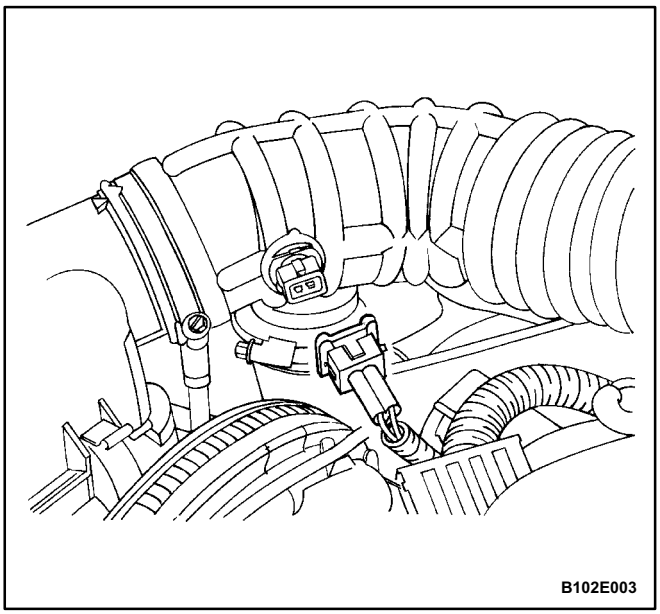

1. Disconnect the negative battery cable.
2. Disconnect the manifold air temperature (MAT) connector from the air intake tube.
3. Remove the air intake tube.

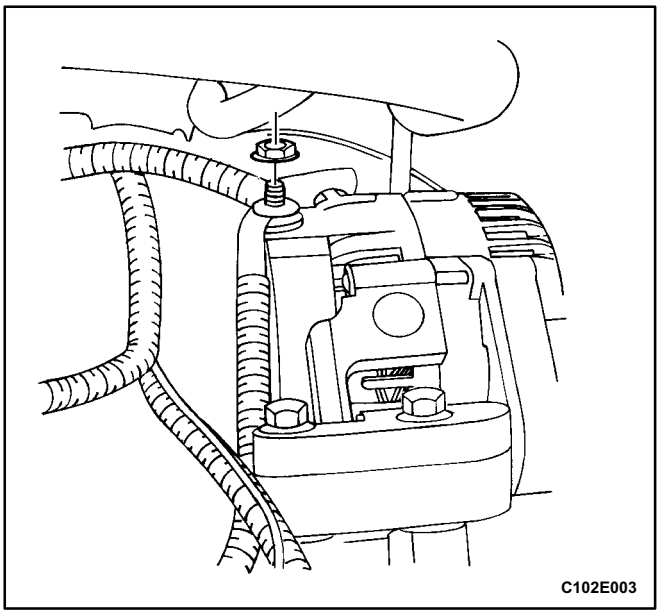

4. Remove the nut from the generator lead to the battery and disconnect the lead.
5. Disconnect the harness connector from the back of the generator.

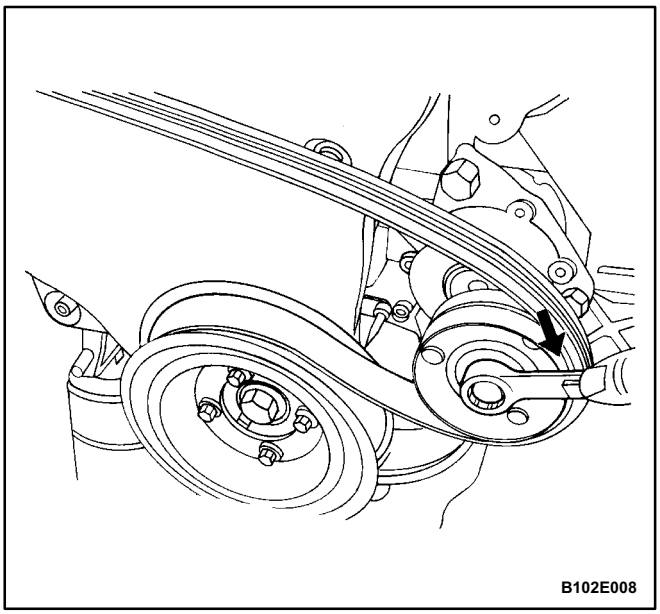

6. Remove the serpentine accessory drive belt. Refer to *Section 6B, Power Steering Pump*.

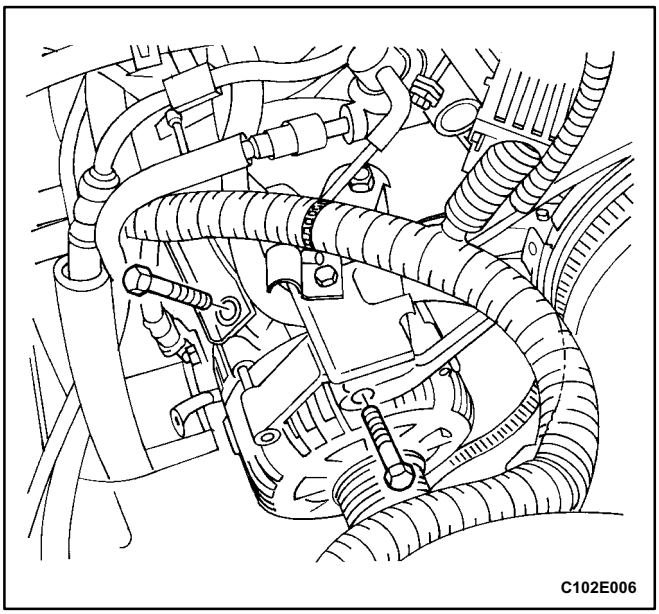

7. Remove the generator-to-intake manifold and cylinder head support bracket bolts, and the generator-to-intake manifold strap bracket bolt.
8. Raise the vehicle and remove the bolts that hold the generator lower bracket to the engine.

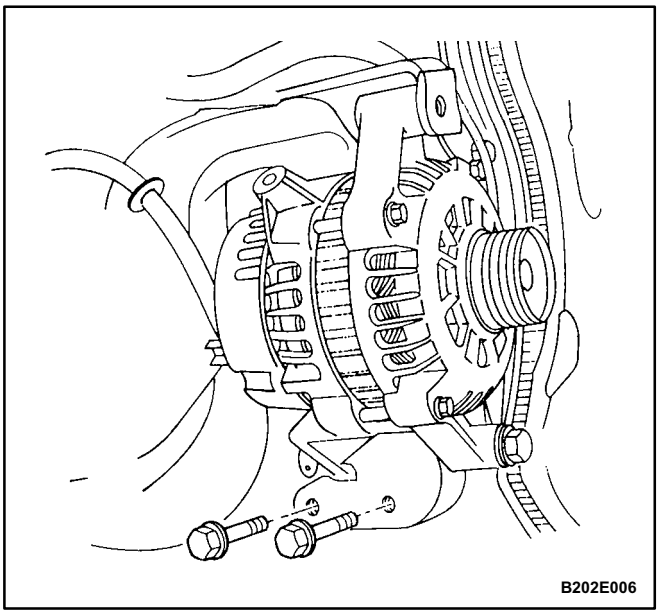

9. Carefully remove the generator with the lower bracket attached.
10. Remove the generator lower support bracket bolt and nut.

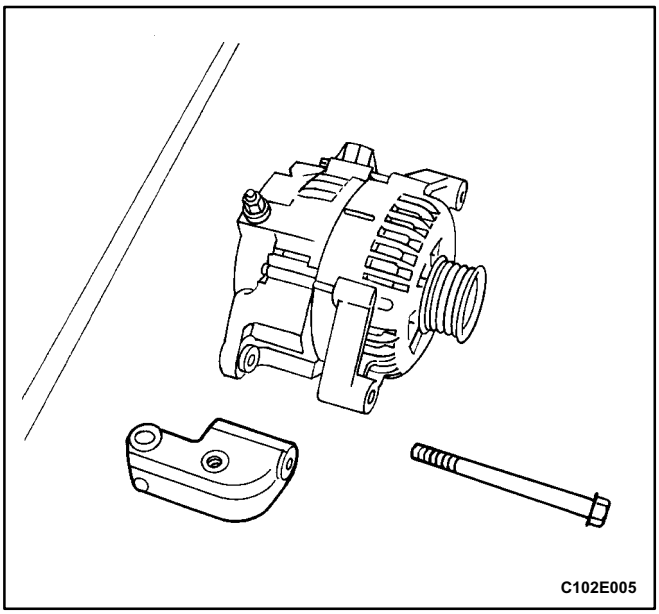

Installation Procedure

1. Install the generator to the lower bracket with the bolts.
2. Install the nut and the washer on the lower bracket-to-generator bolt.

   Tighten

   Tighten the lower bracket-to-generator nut to 20 N•m (15 lb•ft).
3. Install the generator and the lower support bracket assembly to the engine block with the bolts.

   Tighten

   Tighten the generator lower bracket-to-engine block bolts to 30 N•m (22 lb•ft).

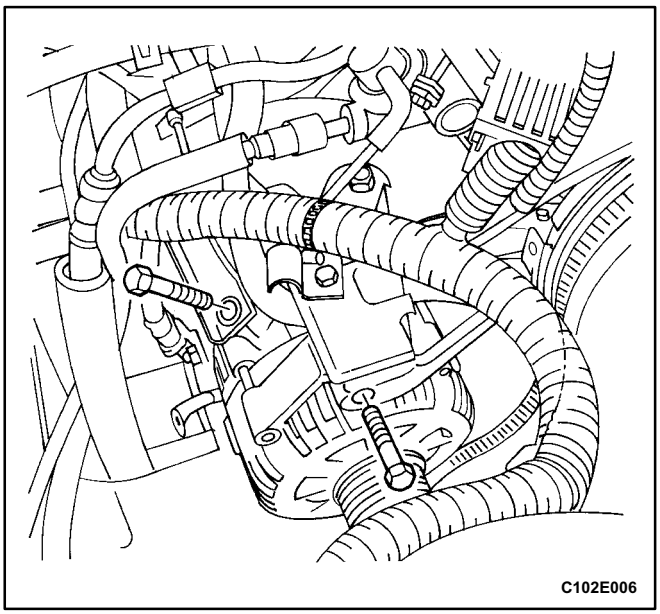

4. Lower the vehicle and install the generator to intake manifold and cylinder head support bracket bolts.

   Tighten

   Tighten the generator-to-intake manifold and cylinder head support bracket bolts to 35 N•m (26 lb•ft).

5. Install the generator-to-intake manifold strap bracket bolt.

   Tighten

   Tighten the generator-to-intake manifold strap bracket bolt to 20 N•m (15 lb•ft).

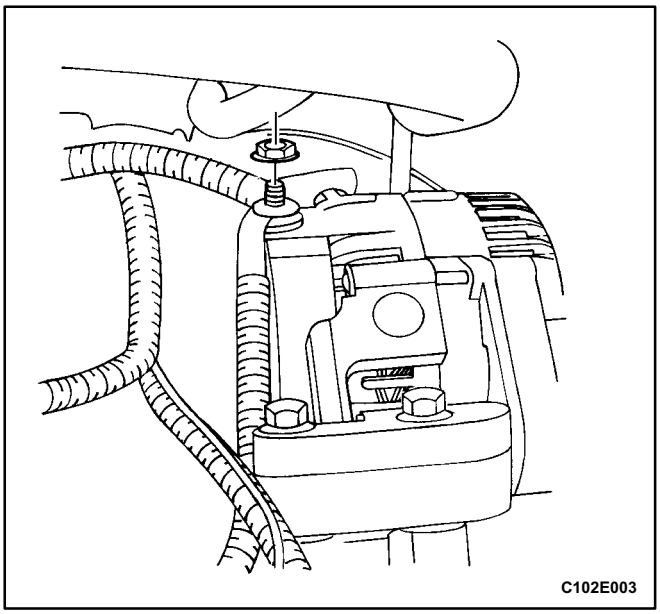

6. Connect the harness connector to the back of the generator.
7. Connect the battery lead to the generator and install the nut.

   Tighten

   Tighten the battery-to-generator lead to 15 N•m (11 lb•ft).

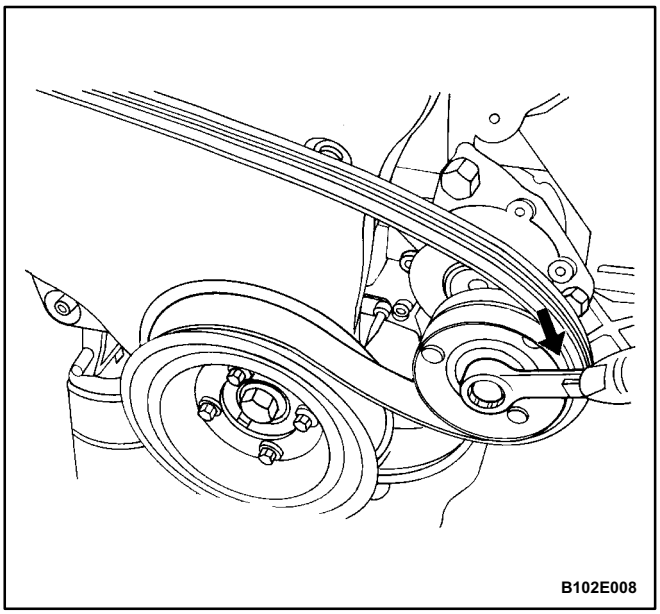

8. Install the serpentine accessory drive belt. Refer to *Section 6B, Power Steering Pump.*

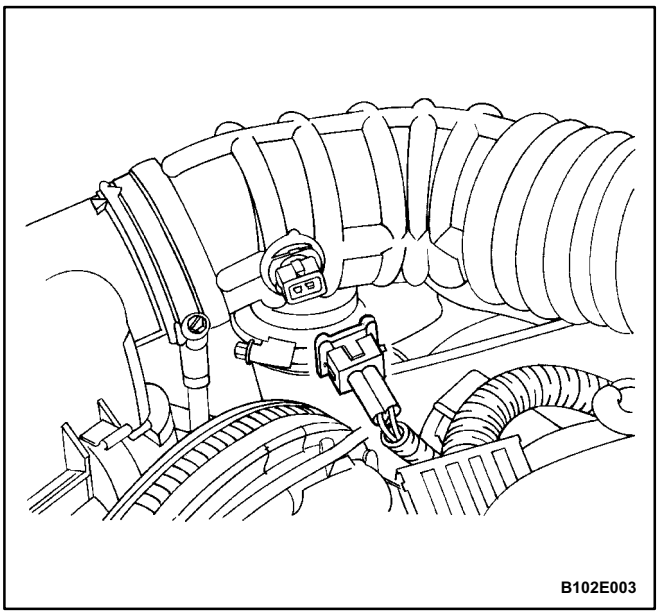

9. Install the air intake tube and connect the MAT electrical connector.
10. Connect the negative battery cable.

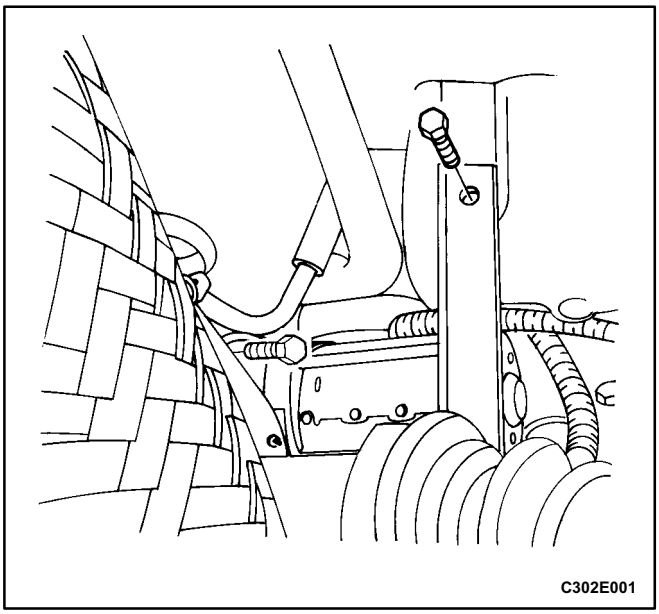

STARTER - PG 150S

Removal Procedure

1. Remove the engine intake manifold-to-engine block strap bracket over the starter.
2. Remove the starter-to-transmission mounting bolt.
3. Remove the starter-to-engine block mounting bolt.

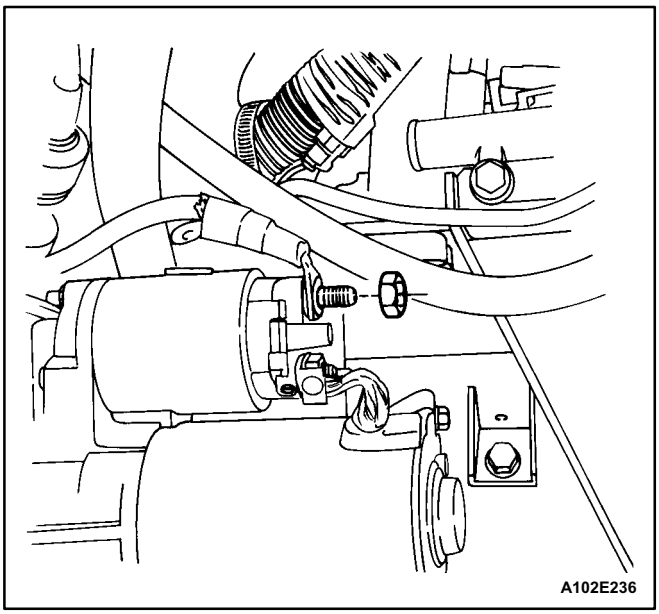

4. Remove the starter solenoid nuts to disconnect the electrical cable.
5. Remove the starter assembly.

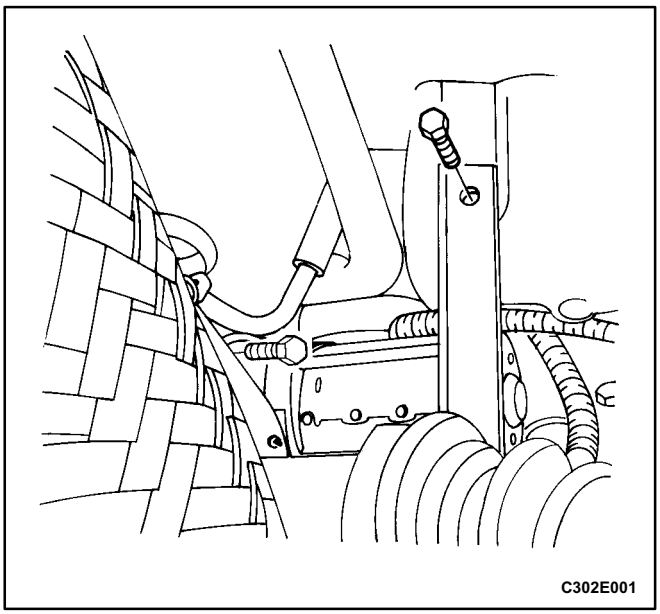

Installation Procedure

1. Place the starter assembly in position.
2. Install the upper and the lower starter mounting bolts.

   Tighten

   Tighten the starter-to-engine block mounting bolt to 45 N•m (33 lb•ft).

   Tighten

   Tighten the starter-to-transmission mounting bolt to 50 N•m (37 lb•ft).
3. Install the engine intake manifold-to-engine block strap bracket over the starter.

   Tighten

   Tighten the engine strap bracket over the starter to 20 N•m (15 lb•ft).

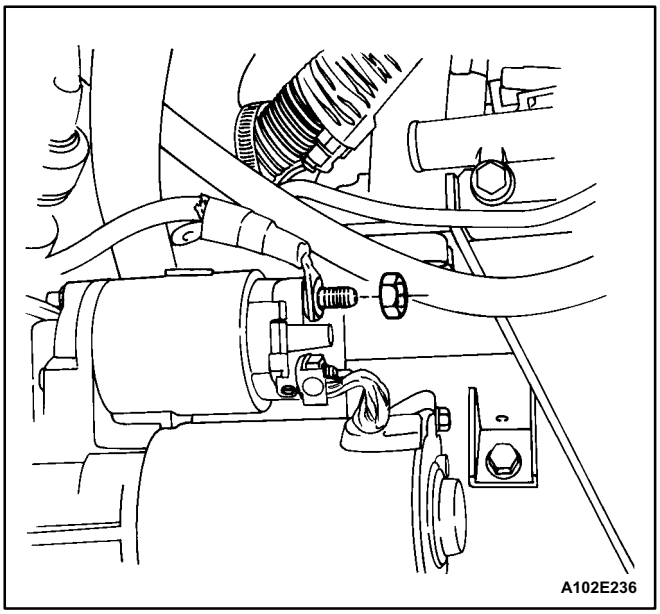

4. Position the starter electrical wire on the solenoid terminal.
5. Install the starter solenoid terminal-to-ignition solenoid terminal nut.

   Tighten

   Tighten the nut to 6 N•m (53 lb•in).
6. Install the starter solenoid terminal-to-battery cable terminal nut.

   Tighten

   Tighten the nut to 7 N•m (62 lb•in).

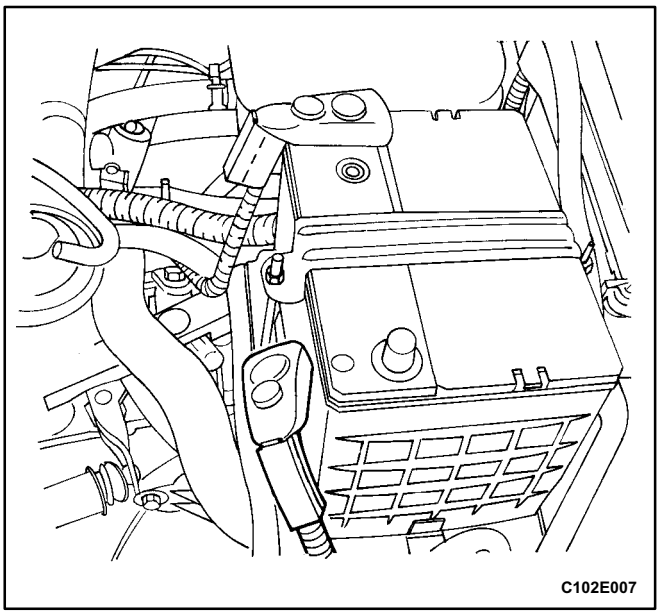

BATTERY/BATTERY TRAY

Removal Procedure

1. Disconnect the negative battery cable.

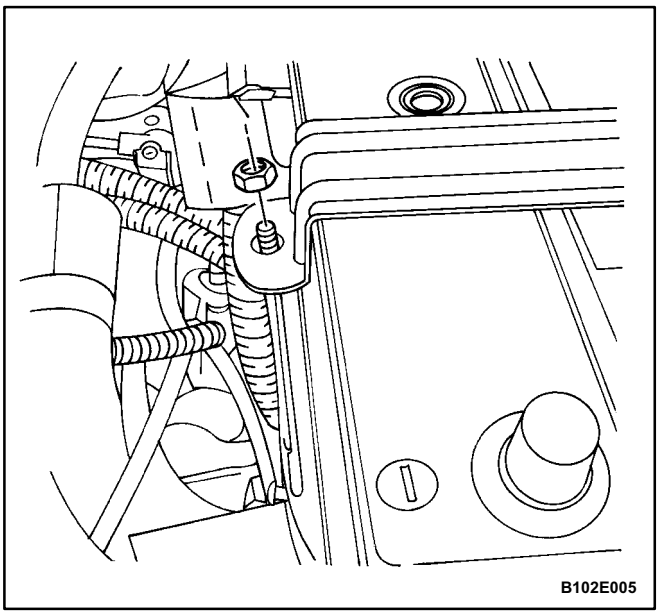

2. Disconnect the positive battery cable.
3. Remove the nuts from the battery rods that fasten the battery hold-down bar clamp.

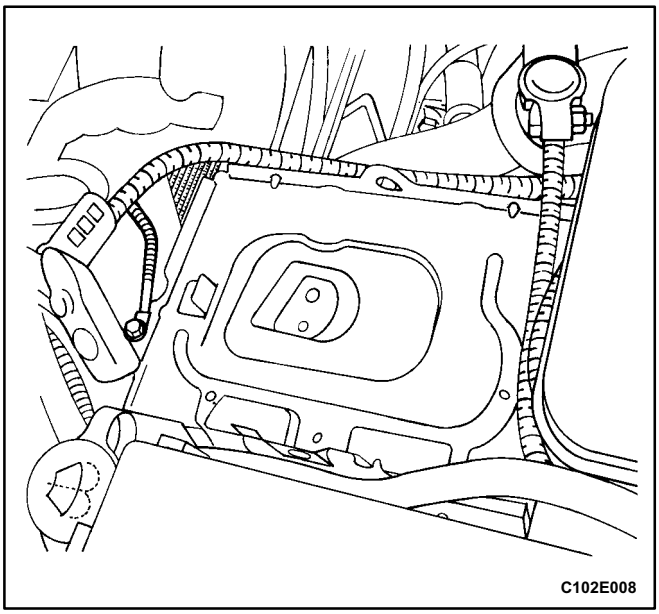

4. Check the battery carrier tray for obvious cracks or damage.
5. Detach the carrier tray if necessary by removing the battery carrier tray upper bolts, including the bolt of the battery terminal.
6. Remove the battery carrier tray lower bolts.

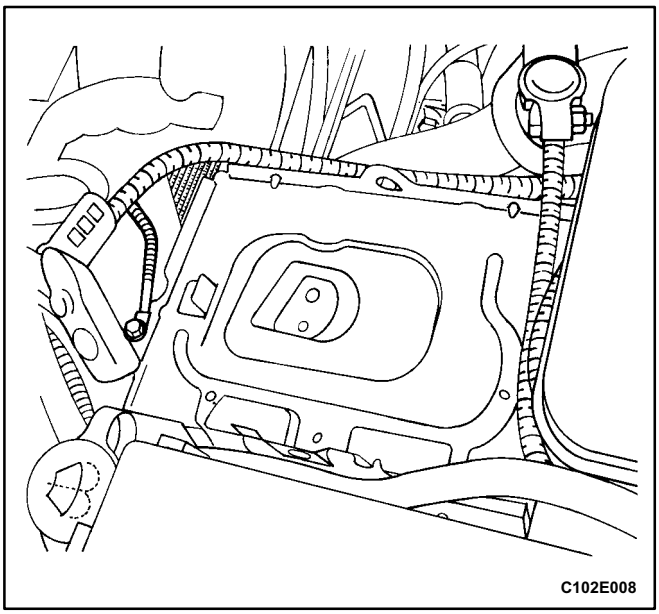

Installation Procedure

1. Install the battery carrier by fastening the carrier tray upper and the lower bolts.

Tighten

Tighten the battery carrier tray upper bolts, including the battery terminal bolts to 20 N•m (15 lb•ft).

Tighten

Tighten the battery carrier tray lower bolts to 10 N•m (89 lb•in).

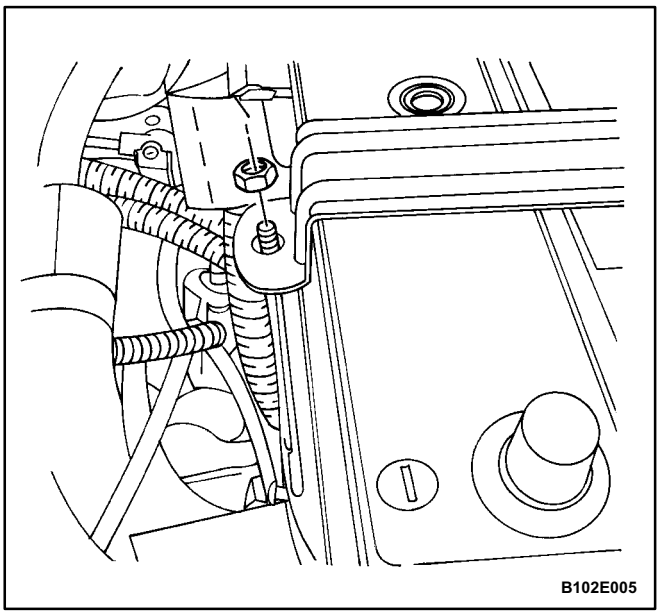

2. Install the battery into the tray.
3. Fasten the bar clamp to the battery by loosely attaching the battery rods from the battery tray cutouts through the bar clamp holes, and loosely tightening the nuts.

Tighten

Tighten the battery retainer clamp-to-battery rod nuts to 4 N•m (35 lb•in).

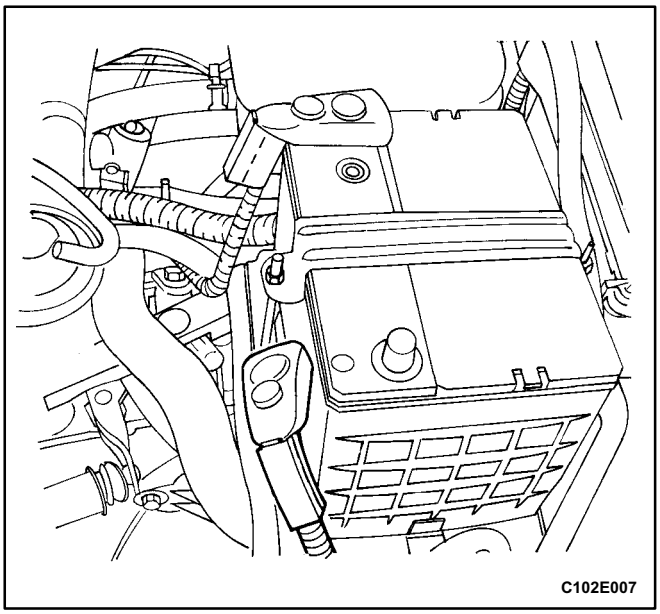

4. Connect the positive battery cable.
5. Connect the negative battery cable.

Tighten

Tighten the battery cable nuts to 15 N•m (11 lb•ft).

UNIT REPAIR

STARTER MOTOR

Disassembly Procedure

1. Remove the starter. Refer to "Starter" in the On-Vehicle Service portion of this section.
2. Remove the starter through-bolts.

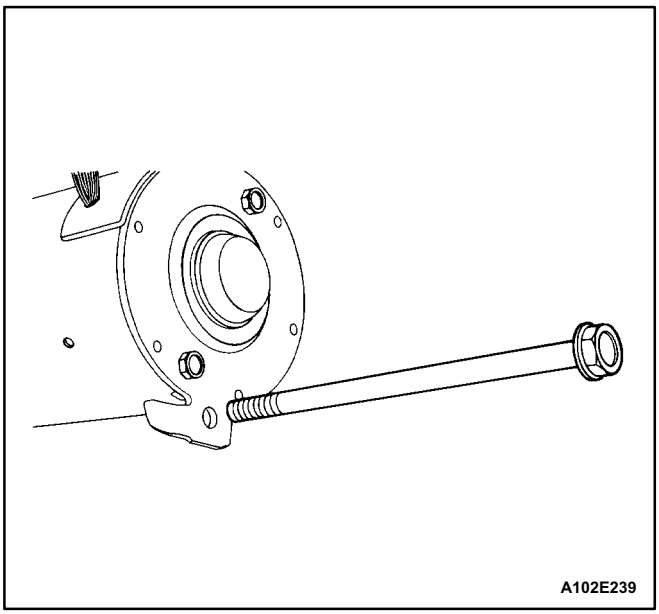

3. Remove the commutator end frame and brush holder assembly.
4. Inspect the brushes, the pop-out springs, and the brush holders for wear and damage. Replace the assembly if needed.

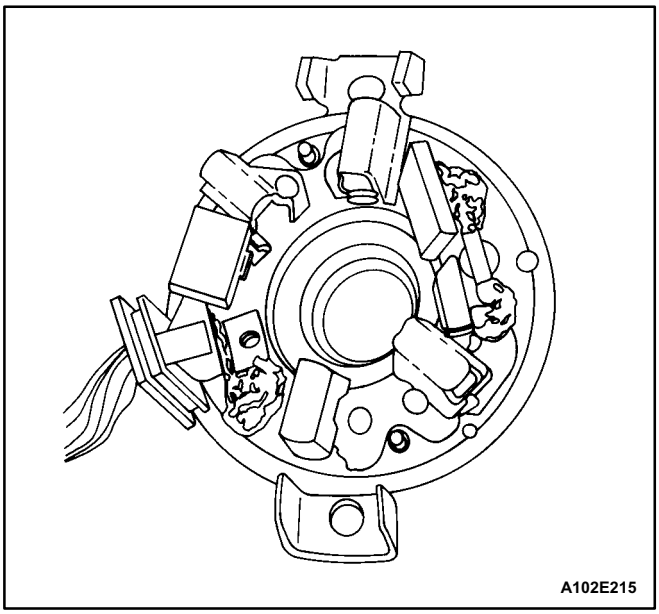

5. Check the armature to see if it turns freely. If the armature does not turn freely, break down the assembly immediately, starting with Step 12 of this procedure. Otherwise, give the armature a no-load test.

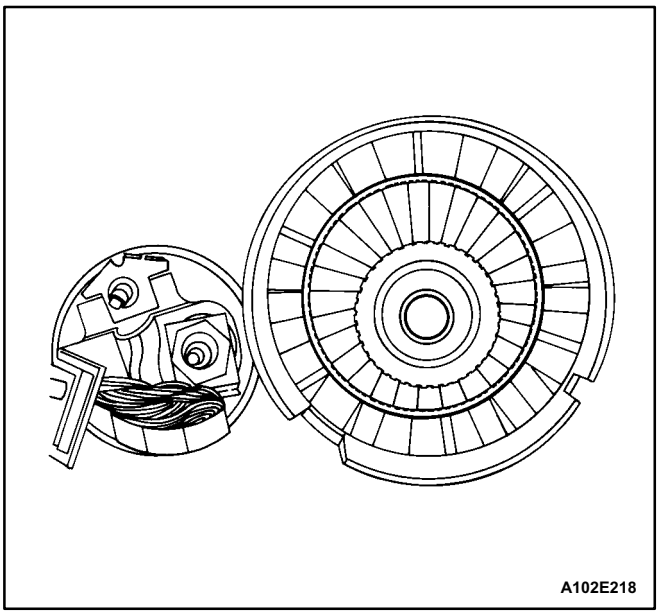

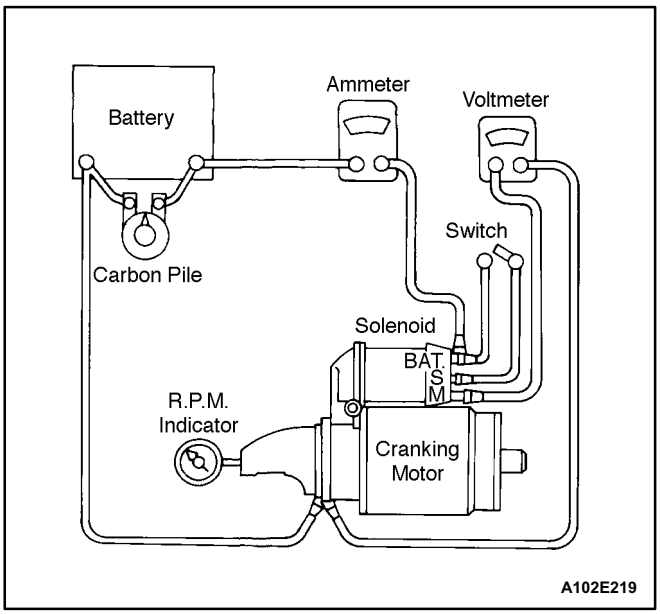

Notice: Complete the testing in a minimum amount of time to prevent overheating, and thus damaging the solenoid.

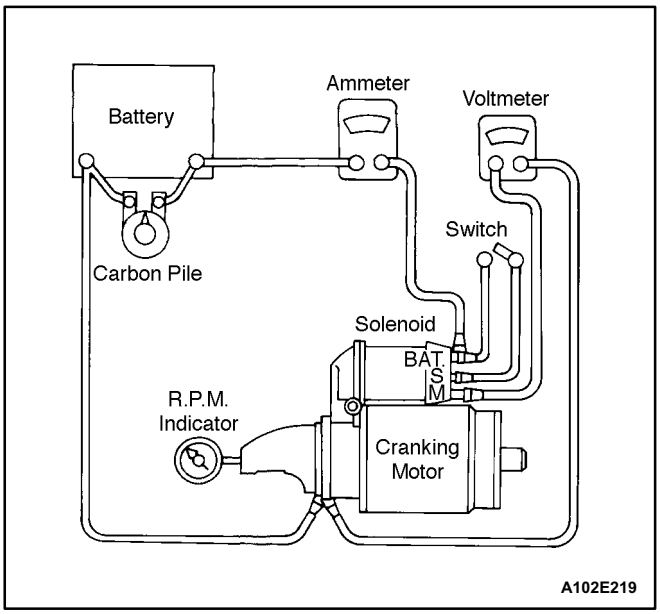

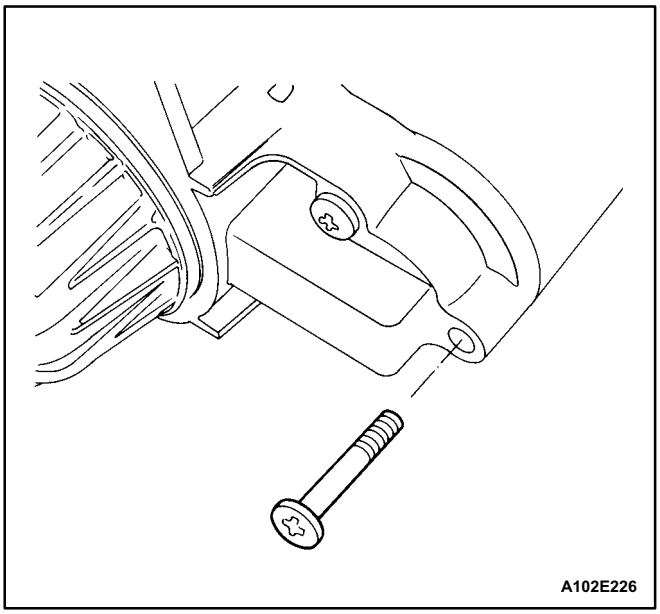

Important: If the specified current draw does not include the solenoid, deduct from the armature reading the specified current draw of the solenoid hold-in winding.

6. To begin the no-load test, close the switch and compare the RPM, the current, and the voltage readings with the specifications. Refer to "Starter Specifications" in this section. Make disconnections only with the switch open. Use the test results as follows.
   - 6.1 Rated current draw and no-load speed indicate the normal condition of the starter motor.
   - 6.2 Low free speed and high current draw indicate too much friction caused by tight, dirty or worn bearings, or a bent armature shaft; a shorted armature, or a shorted armature and fields.
   - 6.3 Failure to operate with high current draw indicates a direct ground in the terminal or fields, or "frozen" bearings.
   - 6.4 Failure to operate with no current draw indicates an open field circuit, open armature coils, broken brush springs, worn brushes, high insulation between the commutator bars, or other causes which would prevent good contact between the brushes and the commutator.
   - 6.5 Low no-load speed and low current indicate high internal resistance and high current draw, which usually mean shorted fields.

7. Remove the solenoid assembly screws.

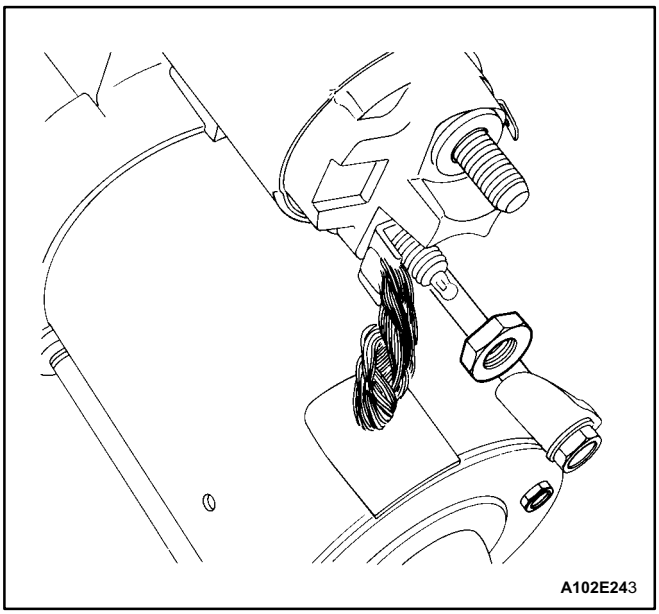

8. Remove the field connector nut. Disconnect the field connector.

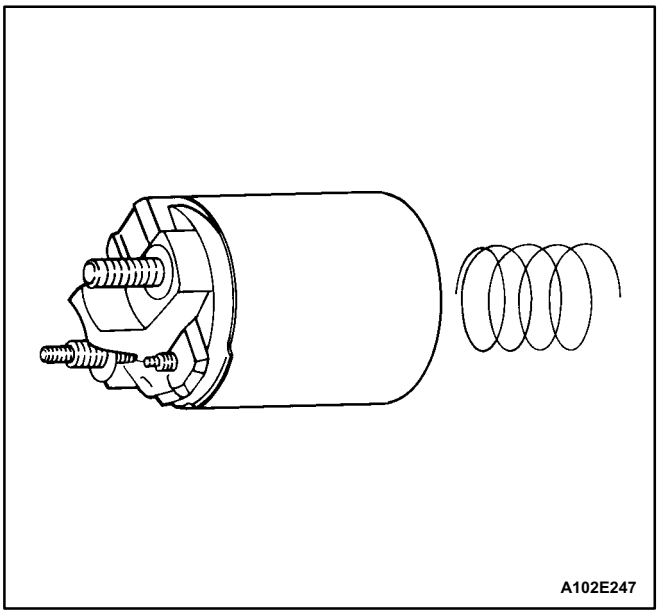

9. Rotate the solenoid 90 degrees and remove it along with the plunger return spring.

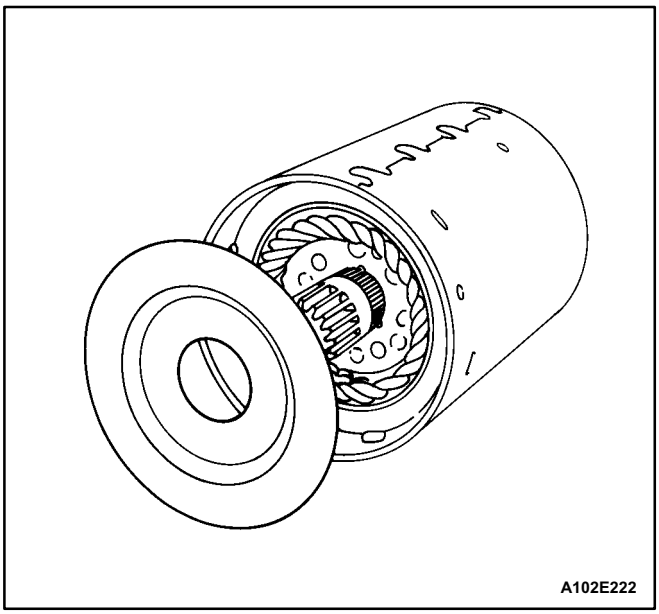

10. Slide the field frame with enclosed armature assembly away from the starter assembly.
11. Remove the shield.

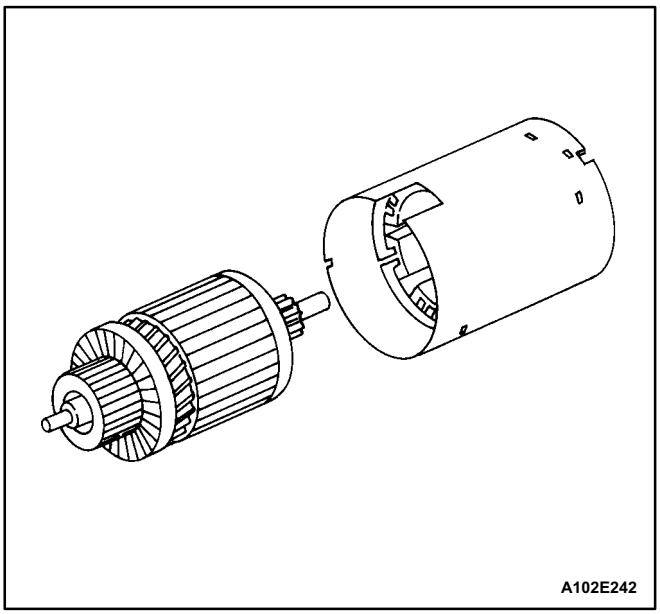

12. Separate the field frame from the armature.

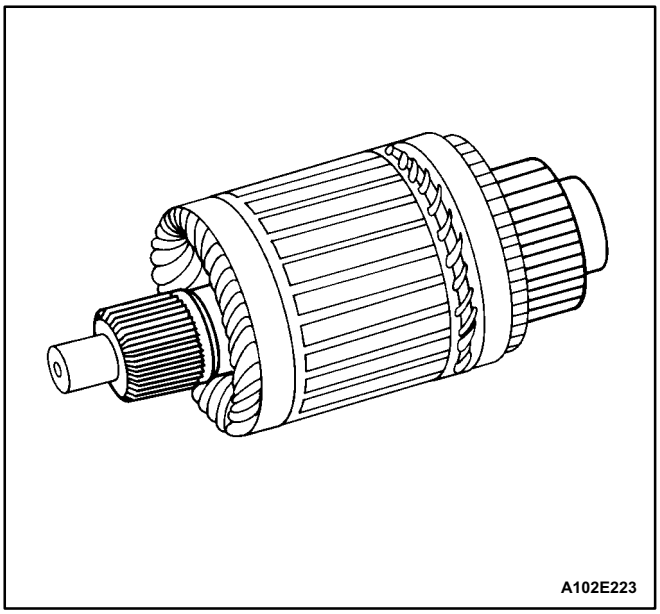

13. Inspect the shaft, the bearing, and the pinion for discoloration, damage, or wear. Replace if necessary.
14. Inspect the points where the armature conductors join the commutator bars. Make sure they have a good connection. A burned commutator bar is usually evidence of a poor connection.
15. If test equipment is available, check the armature for short circuits by placing it on a growler, and holding back a saw blade over the armature core while the armature is rotated. If the saw blade vibrates, replace the armature.
16. Recheck after cleaning between the commutator bars. If the saw blade vibrates, replace the armature.

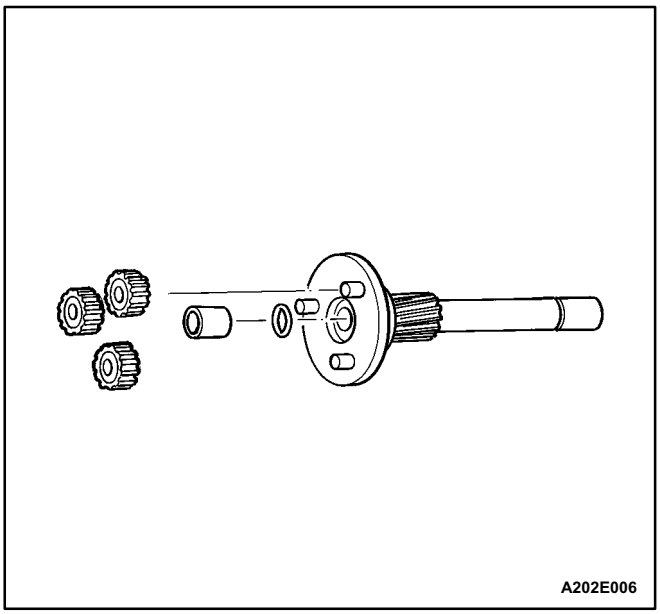

17. Remove the gears, the bushing, and the washer.
18. Remove the cushion and driveshaft assembly from the starter housing.

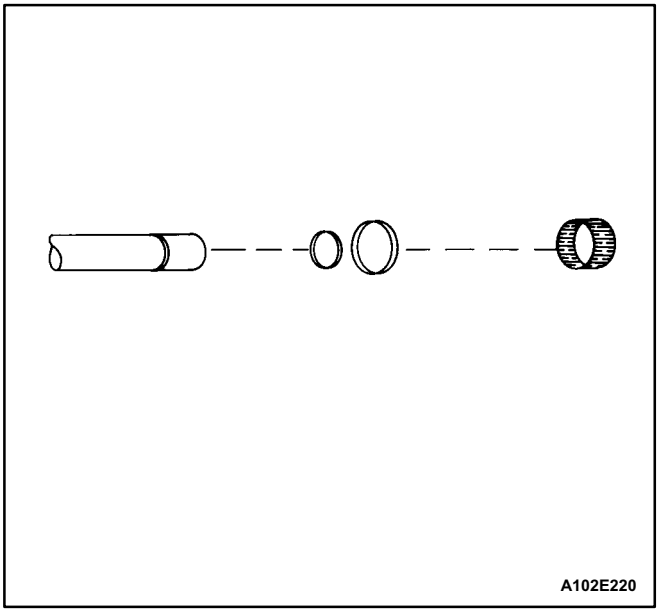

19. Disassemble the driveshaft assembly by first separating the needle bearing from the driveshaft.
20. Remove the collar and the locking ring from the groove in the driveshaft.

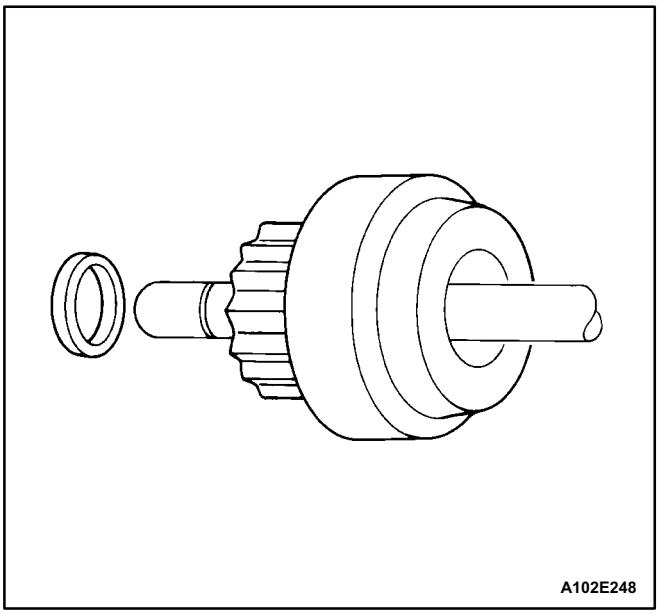

21. Remove the pinion stop and the drive from the driveshaft.

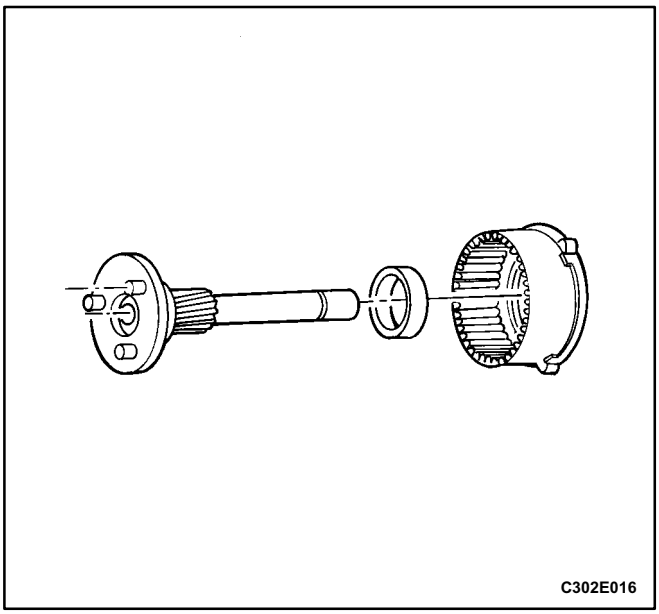

22. Remove the gear support and collar from the driveshaft.

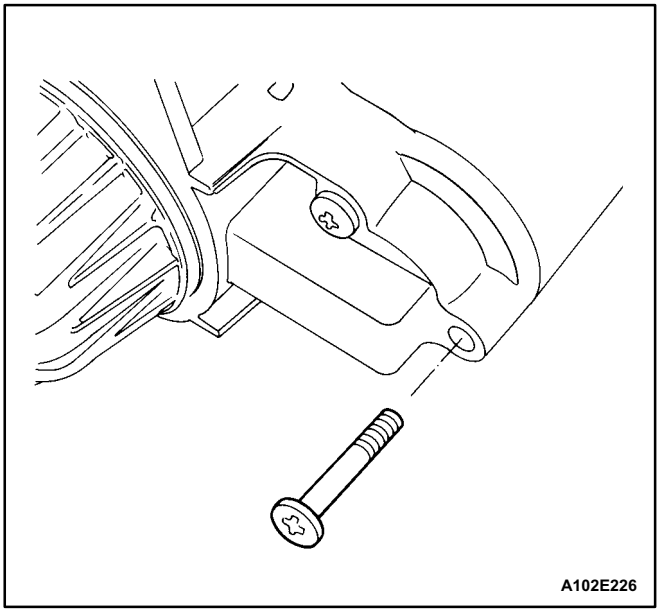

23. If not done in the previous steps, remove the screws holding the solenoid assembly into the housing, and remove the nut from the field coil connector.

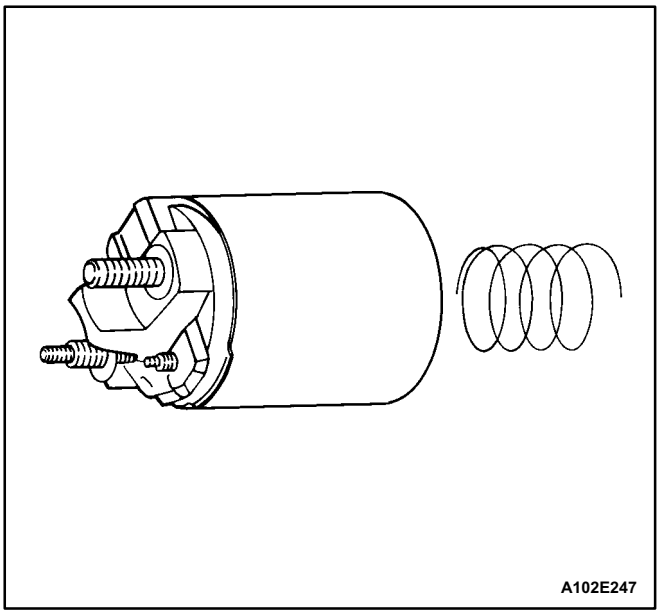

24. Rotate the solenoid 90 degrees and remove it along with the return spring.

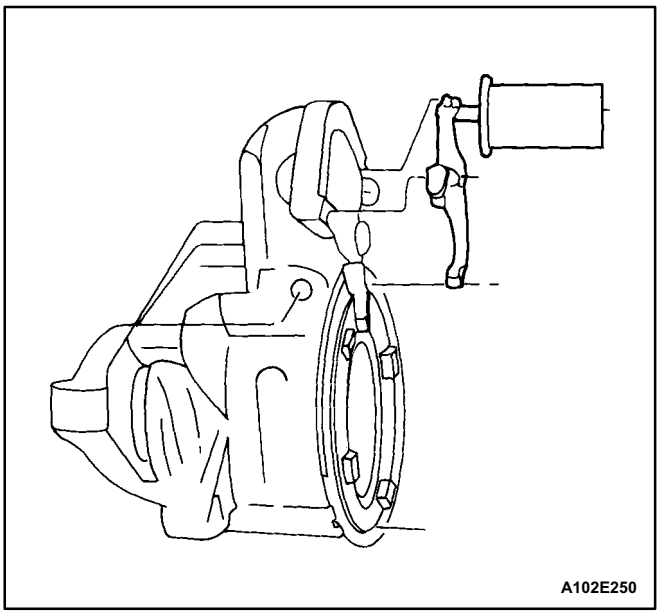

25. Remove the plunger with the boot and the shift lever assembly.

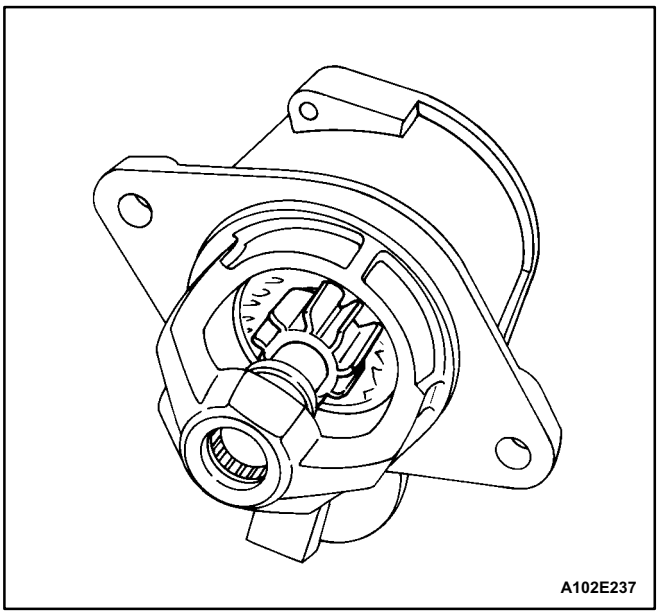

Notice: The pinion clearance must be correct to prevent the buttons on the shift lever yoke from rubbing on the clutch collar during the cranking.

26. When the starter motor is disassembled and the solenoid is replaced, it is necessary to check the pinion clearance.

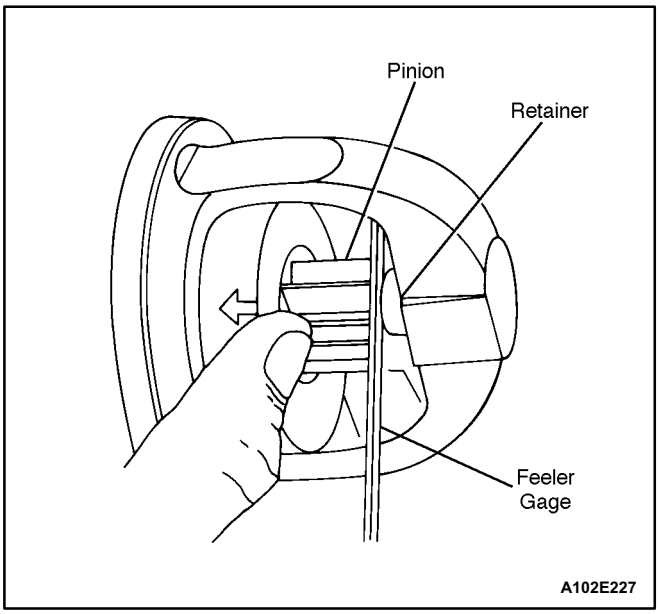

27. Disconnect the motor field coil connector from the solenoid motor terminal and carefully insulate the connector.
28. Connect one 12 volt battery lead to the solenoid switch terminal and the other to the starter frame.
29. Flash a jumper lead momentarily from the solenoid motor terminal to the starter frame, allowing shifting of the pinion in the cranking position, where it will remain until the battery is disconnected.

Important: A means for adjusting the pinion clearance is not provided on the starter motor. If the clearance does not fall within the limits, check for improper installation and replace all worn parts.

30. Push the pinion back as far as possible to take up any movement, and check the clearance with a feeler gauge. The clearance should be 0.25 to 3.56 mm (0.01 to 0.14 inch).

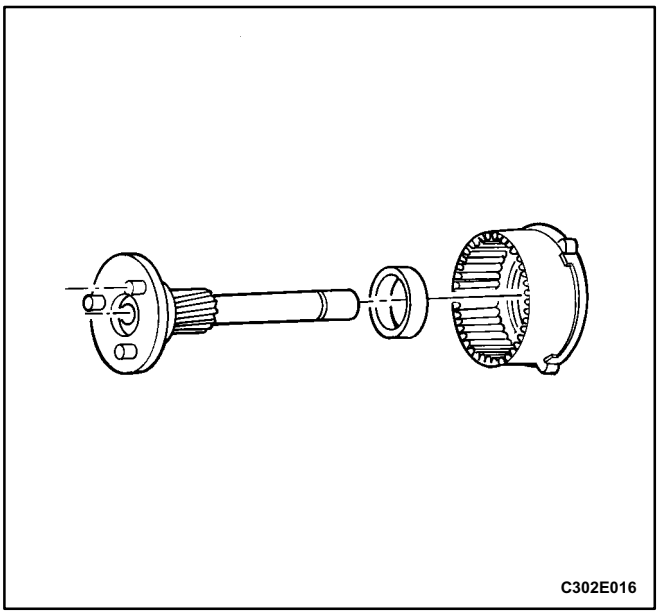

Assembly Procedure

1. Clean all of the starter motor parts, but do not use grease-dissolving solvents for cleaning the armature and the field coils.
2. Lubricate the gears. To reassemble the solenoid only, go to Step 7. To reassemble the starter and the solenoid, go to Step 3.
3. If full disassembly of the starter and the solenoid was performed, begin reassembly by placing the gear support and collar on the driveshaft assembly.

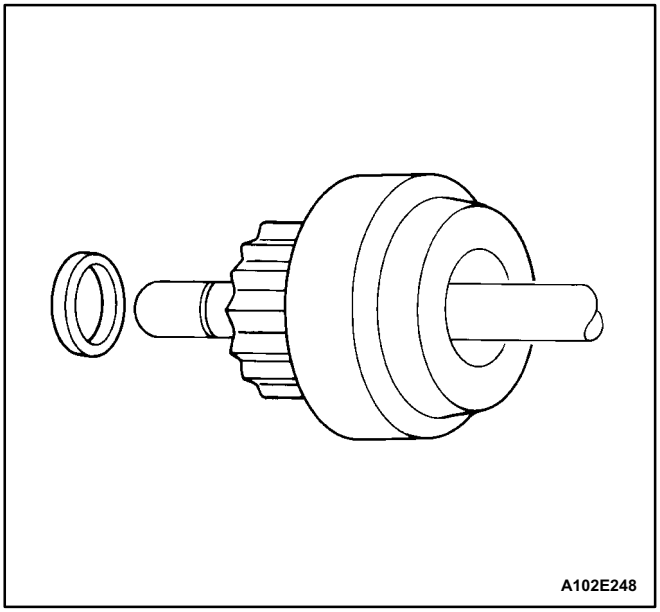

4. Install the drive and the pinion stop on the driveshaft.

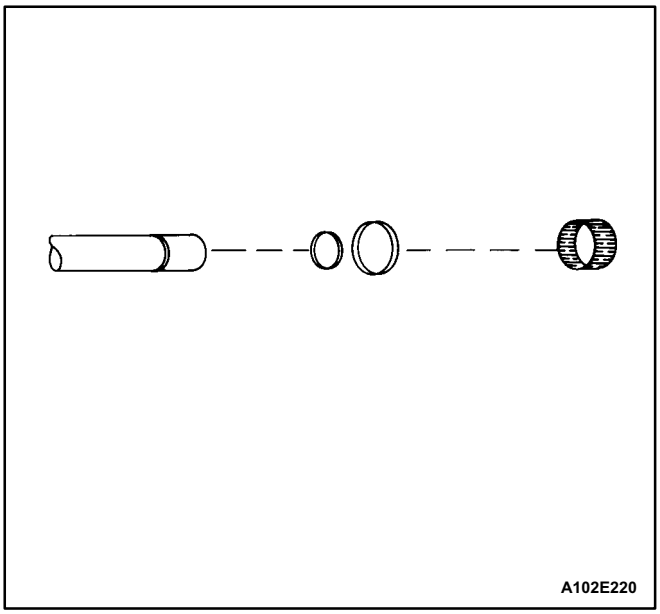

5. Install the lock ring into the groove on the driveshaft and insert the collar.
6. Install the needle bearing.

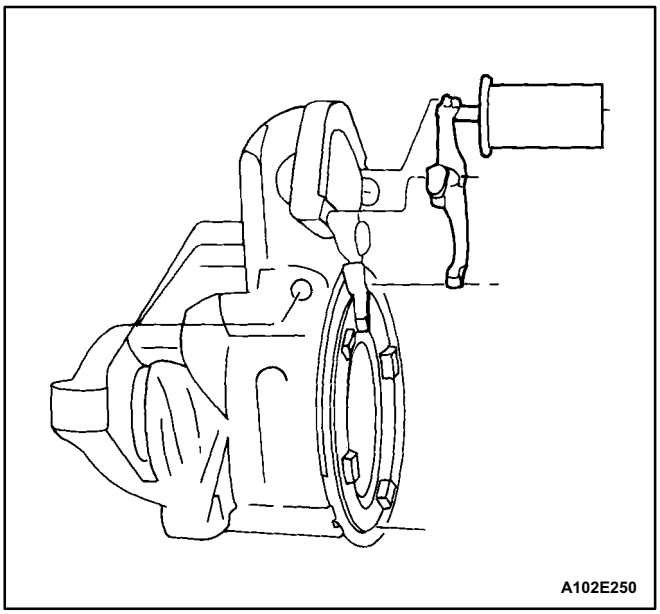

7. Install the shift lever assembly with the plunger and the boot.

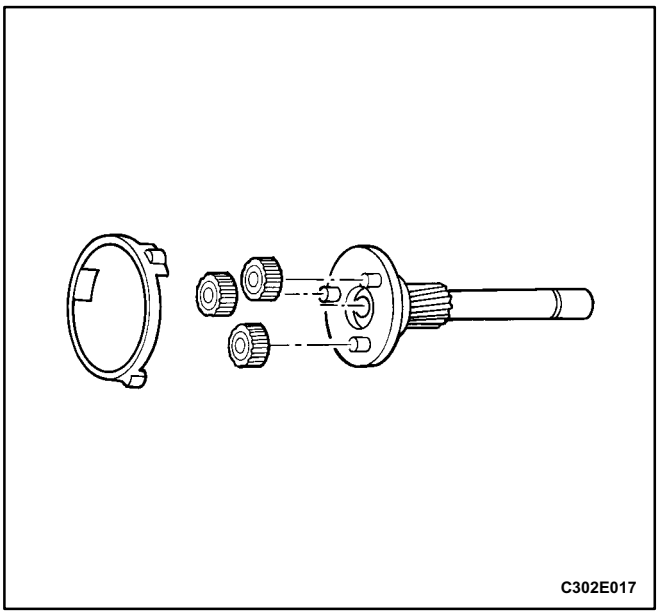

8. Lubricate the gears and install the driveshaft assembly.
9. Install the cushion and the gears.

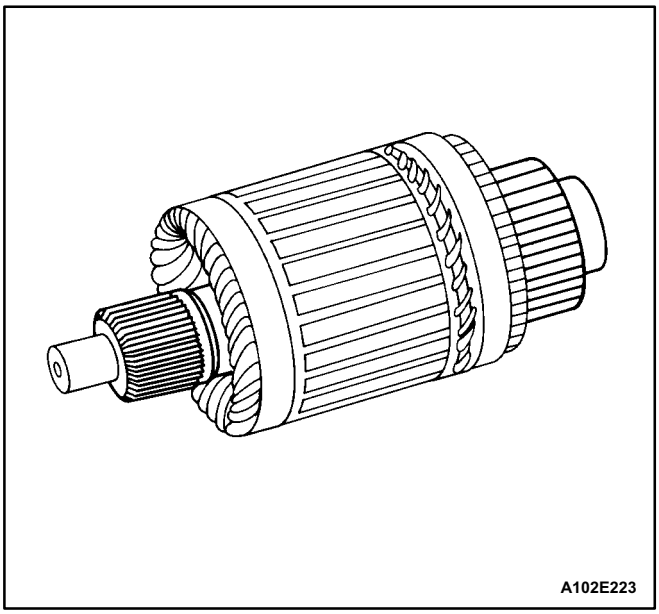

10. Lubricate the drive end of the armature shaft and install the new gear and the bearing, if needed.

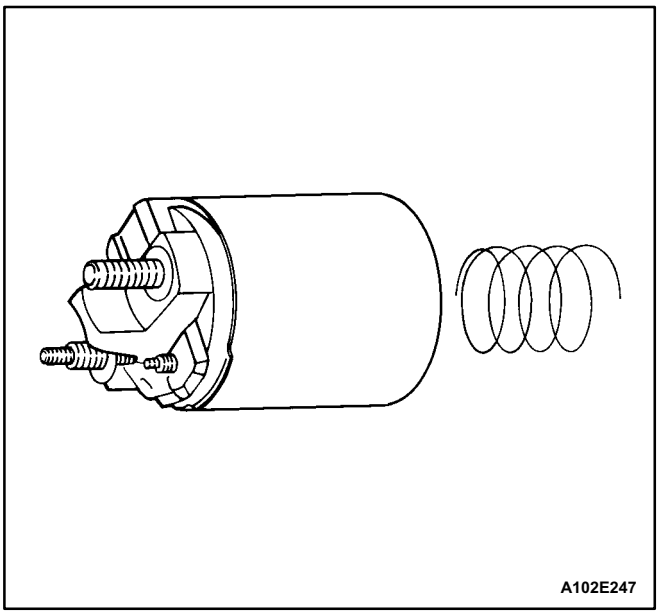

11. Position the solenoid assembly and the return spring against the plunger, applying sealer to the solenoid flange.

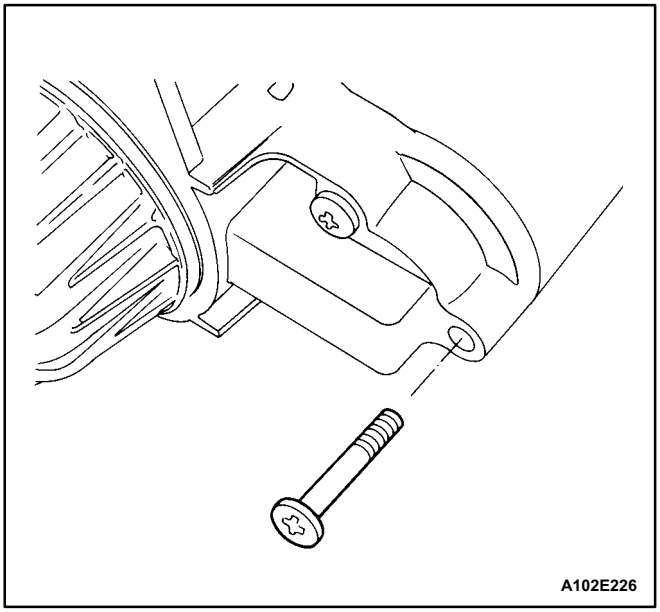

12. Fasten the solenoid assembly with the screws.

Tighten

Tighten the starter solenoid assembly screws to 8 N•m (71 lb•in).

13. Install the field coil connection to the starter terminal. Install the nut.

Tighten

Tighten the starter field connector nut to 8 N•m (71 lb•in).

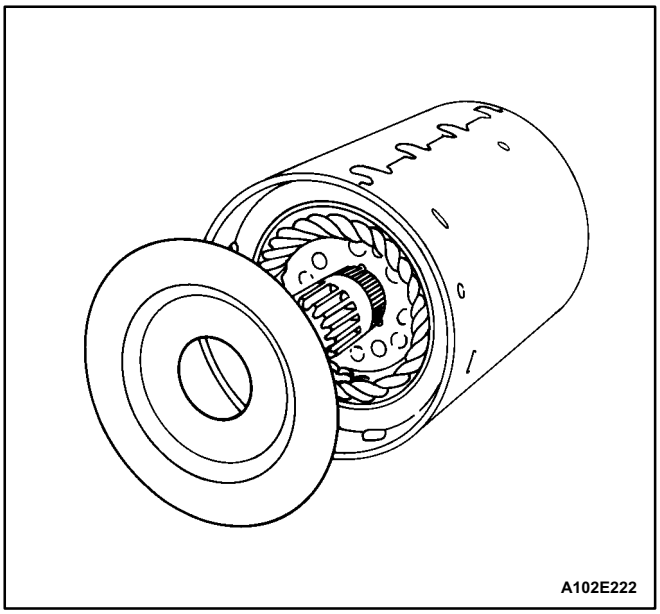

14. Position the armature assembly into the field frame.
15. Place the shield on the armature and field frame assembly.
16. Install the armature and field frame assembly with the shield into the starter housing.

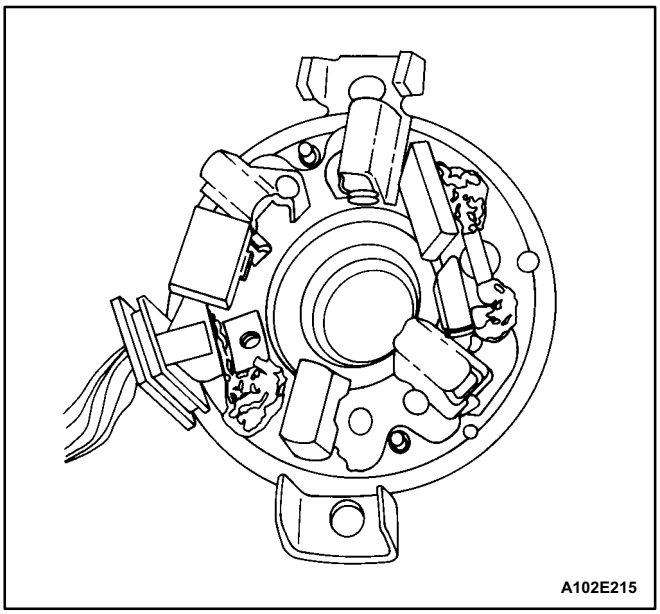

17. Position the commutator end frame and brush holder assembly, lining up the end frame holes with the through-bolt holes in the housing.

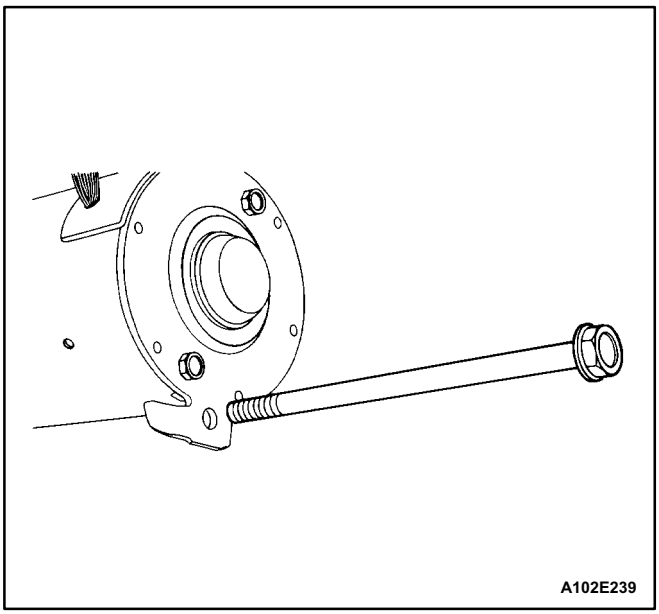

18. Install the starter through-bolts.
19. Install the starter. Refer to "Starter" in the On-Vehicle Service portion of this section.

Tighten

Tighten the starter through-bolts to 6 N•m (53 lb•in).

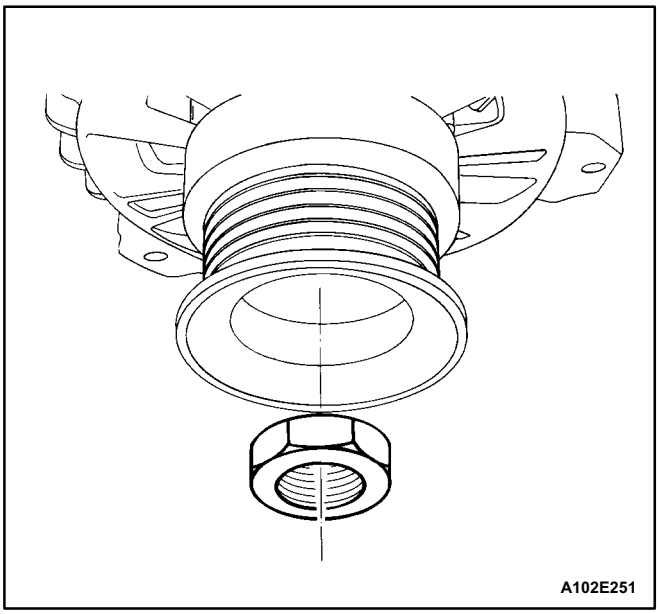

GENERATOR

Disassembly Procedure

1. Remove the generator. Refer to "Generator" in this section.
2. Remove the drive shaft nut.

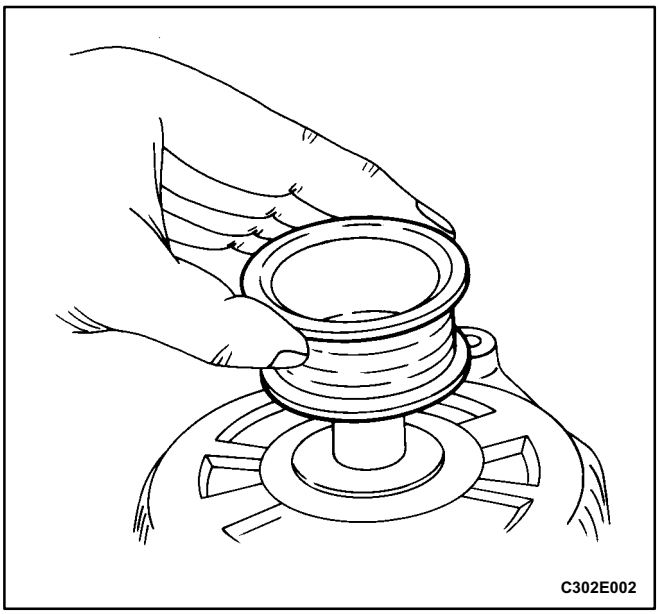

3. Remove the pulley and the collar from the drive shaft.

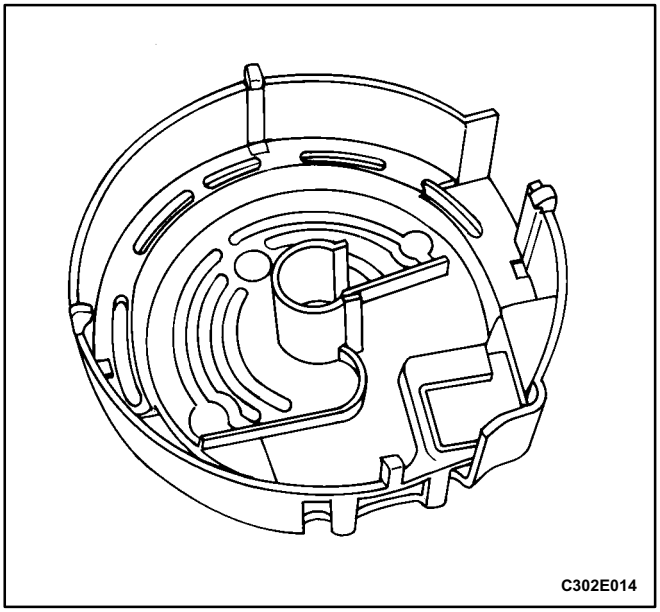

4. Pry off the plastic cover that encloses the rectifier and the regulator/brush holder assemblies. Inspect the cover for damage.

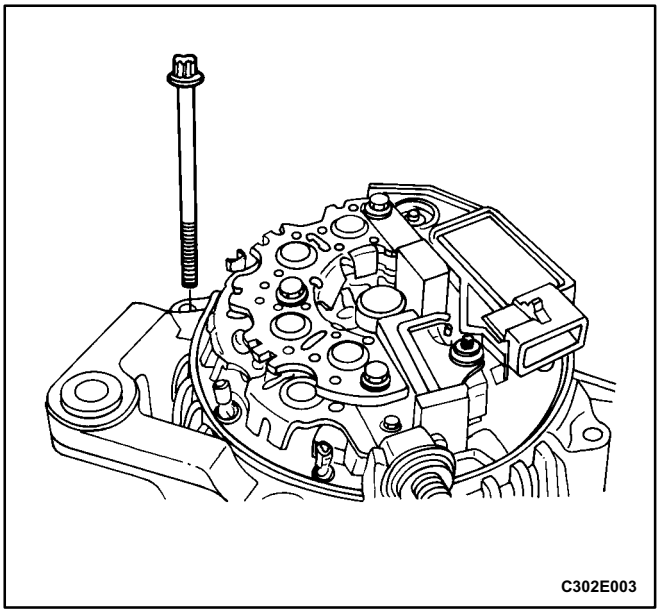

5. Remove the generator through-bolts.

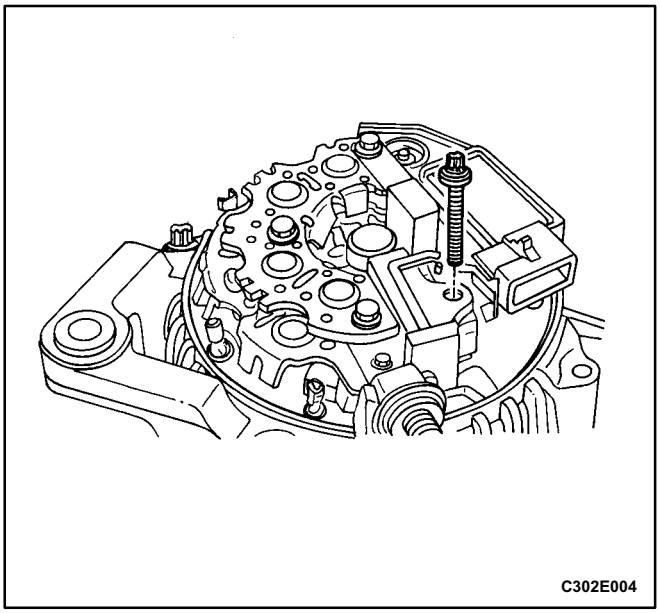

6. Remove the bolts that fasten the rectifier assembly and the regulator/brush holder assembly to the slip ring end frame.

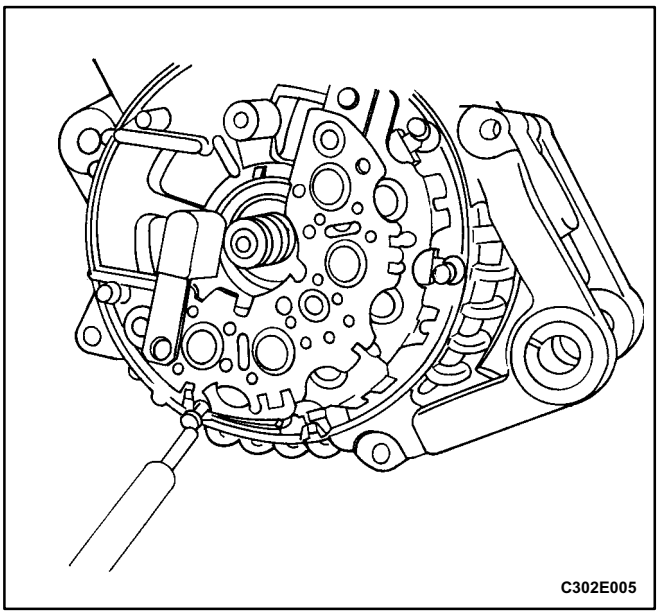

7. To remove the regulator/brush holder and the rectifier assemblies, first melt the solder of the lead connecting the regulator/brush holder assembly to the rectifier assembly lead to the stator. Do the same to the other rectifier assembly leads to the stator (as shown).

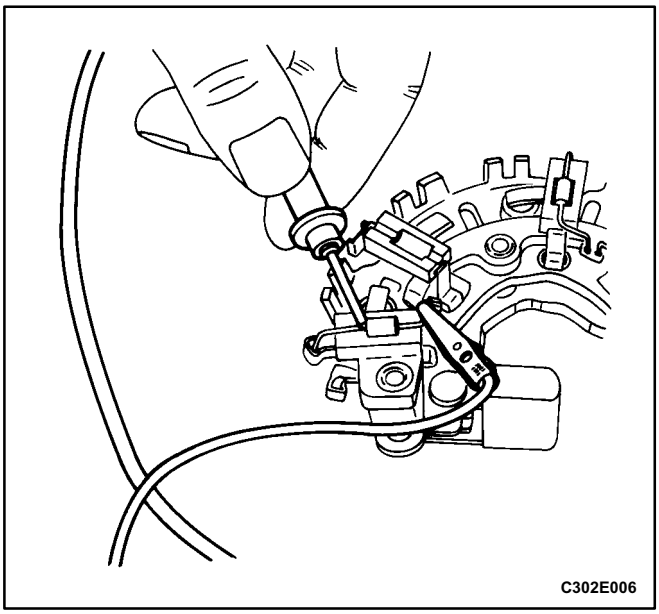

8. Test each of the three diodes of the rectifier assembly for continuity. Connect the ohmmeter probes on each side of the diode. Retest by connecting the ohmmeter probes reversely. If the readings are the same, replace the rectifier.

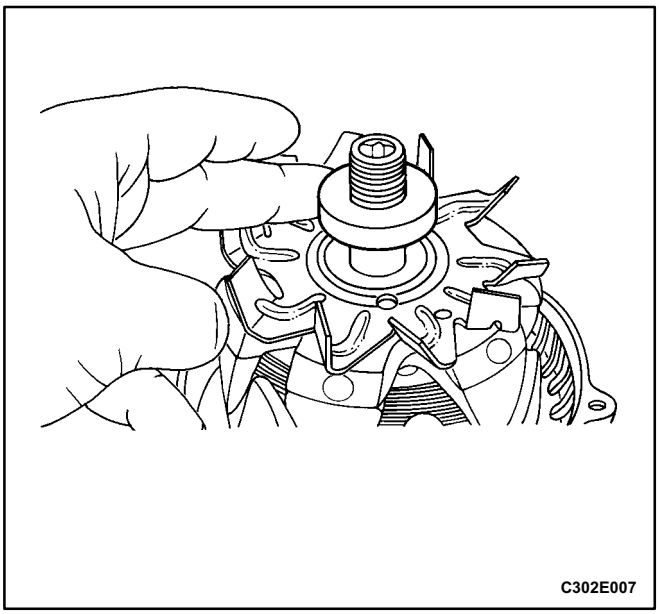

9. Mark a line perpendicular to the crack between the case of the drive end frame and that of the slip ring end frame.
10. Pry open the drive end frame from the slip ring end frame.
11. Remove the collar.

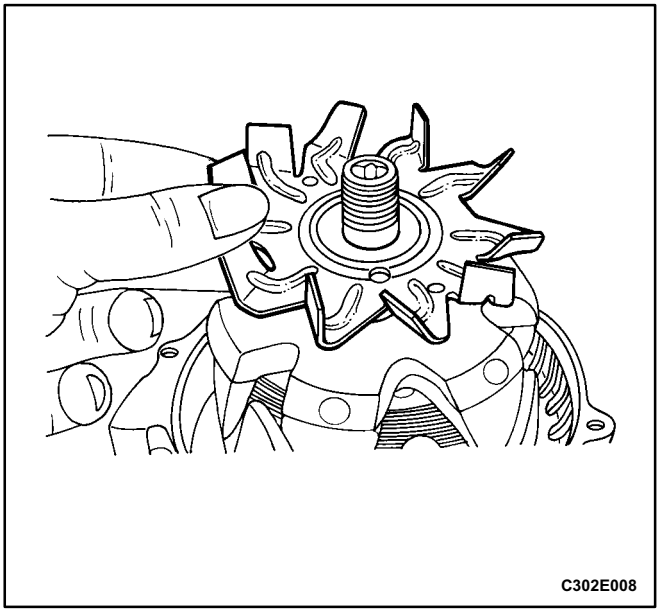

12. Remove the fan.

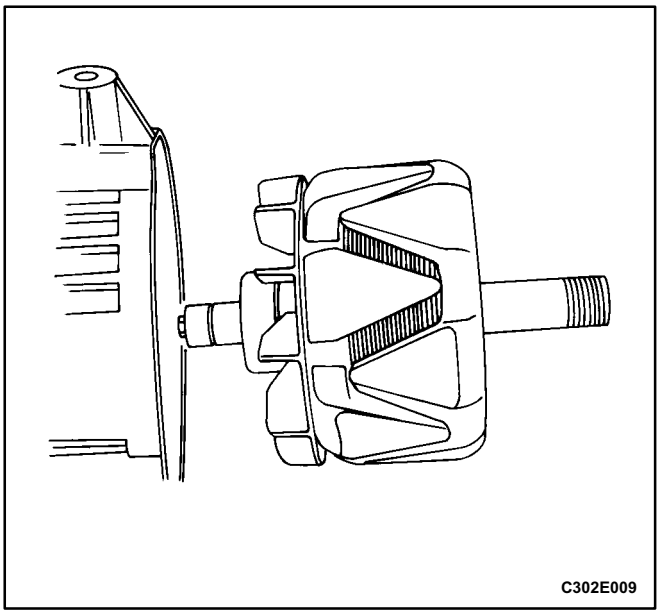

13. Separate the rotor from the slip ring end frame.

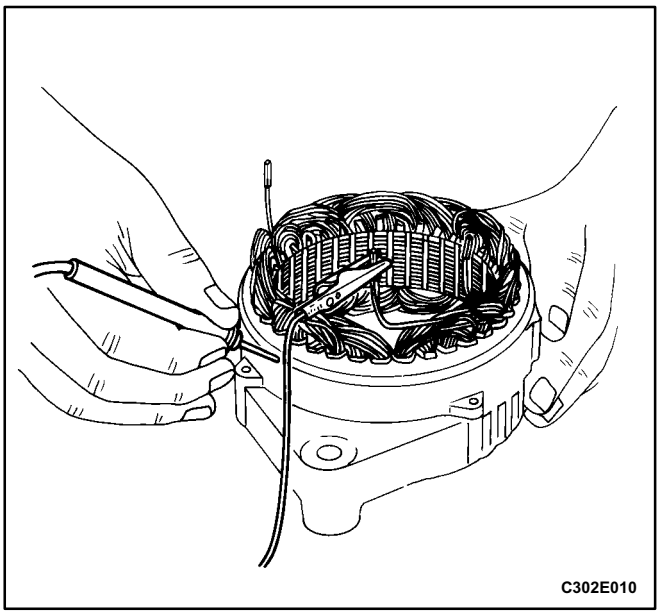

14. Using an ohmmeter, test the stator for ground. If the reading is low, replace the stator. Also check the stator for an open circuit by placing the probes on two terminals. If the reading is high (infinite), replace the stator.

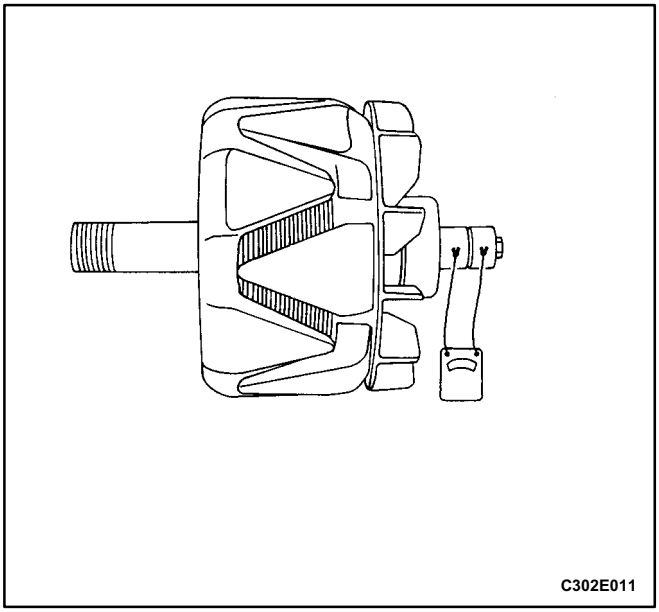

15. Using an ohmmeter, test the rotor for an open circuit. Check that there is continuity between the slip rings. Standard resistance (cold) is 2.8 to 3.0 ohms. If there is no continuity, replace the rotor.

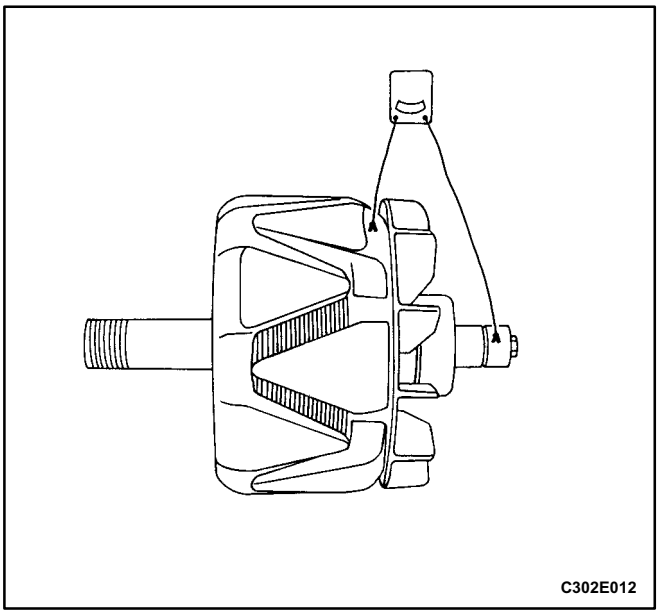

16. Using an ohmmeter, inspect the rotor for ground. Check that there is no continuity between the rotor and the slip ring.

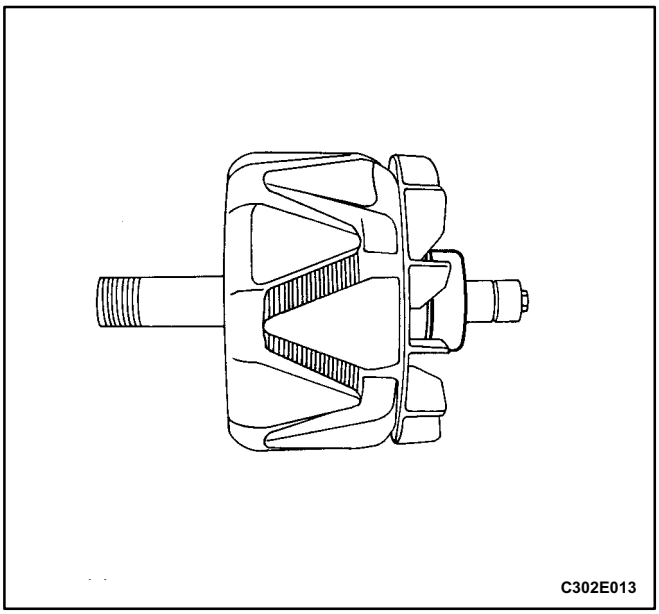

Assembly Procedure

1. Check the bearing on the fan side of the rotor assembly. Replace the bearing if it is rough or worn, and especially if the generator was diagnosed as having a noisy bearing with the vehicle running.
2. If required, install a new bearing and insert the bearing retainer on the rotor assembly shaft.

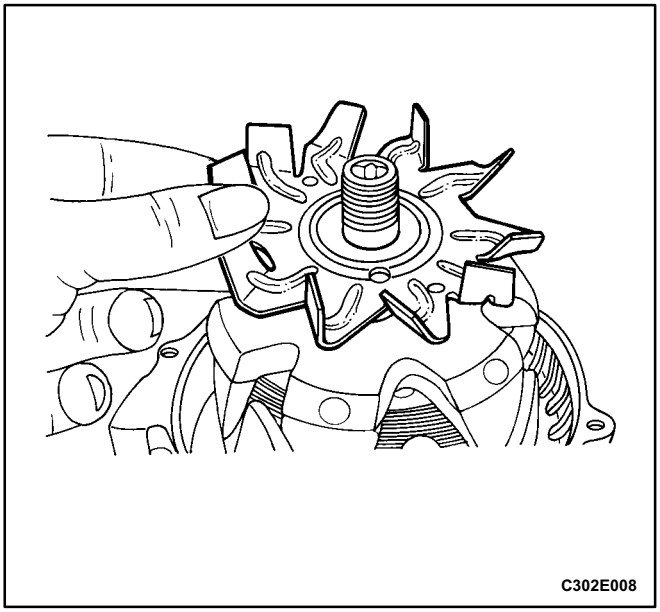

3. Press on rotor assembly into the end frame.
4. Install the fan on the rotor shaft.

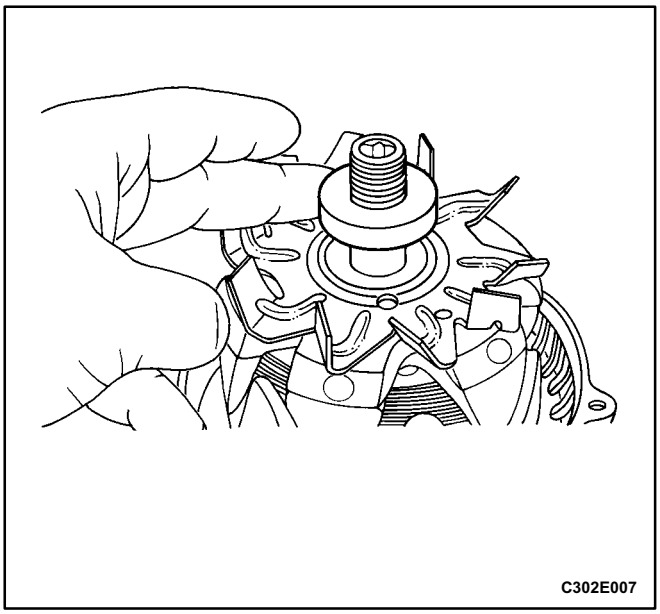

5. Install the collar.

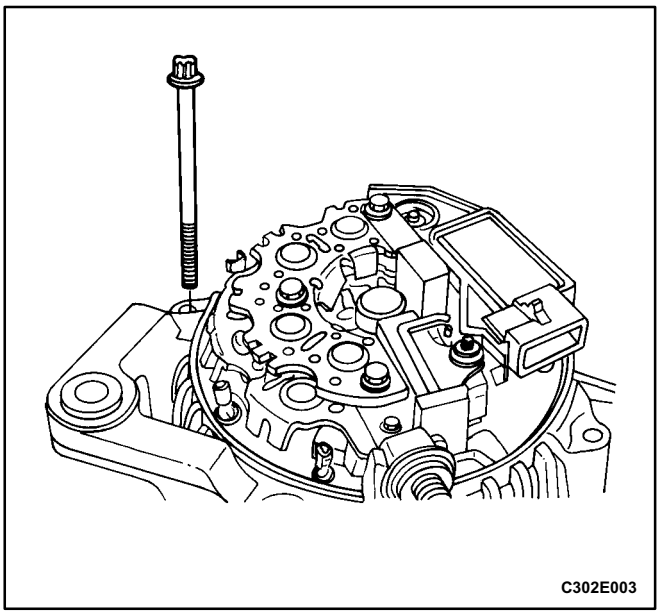

6. Install the slip ring end frame assembly by lining up the terminal ends of the stator with the end frame cover holes and then lining up the previously made marks on the drive end frame case and the slip ring end frame case before the two cases were separated.
7. Install the generator through-bolts.

Tighten

Tighten the generator through-bolts to 25 N•m (18 lb•ft).

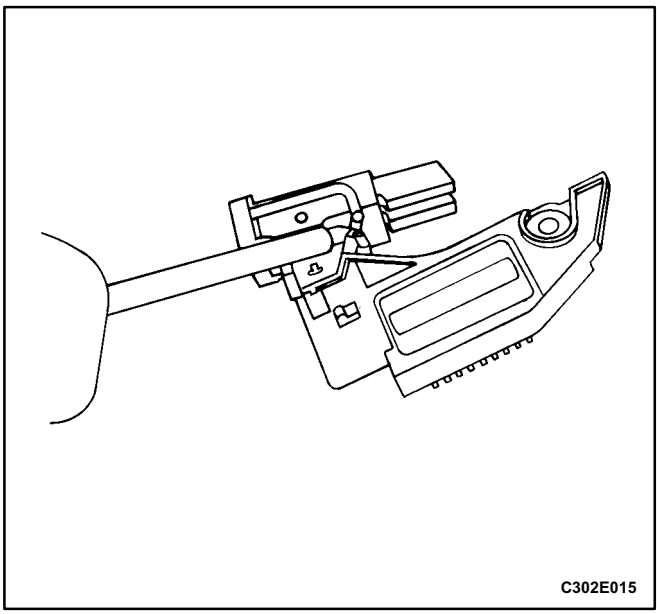

8. Install the rectifier assembly by first soldering its terminals to the stator terminal ends.
9. If the brushes are worn, solder the terminal of the new brush holder assembly to the regulator assembly.

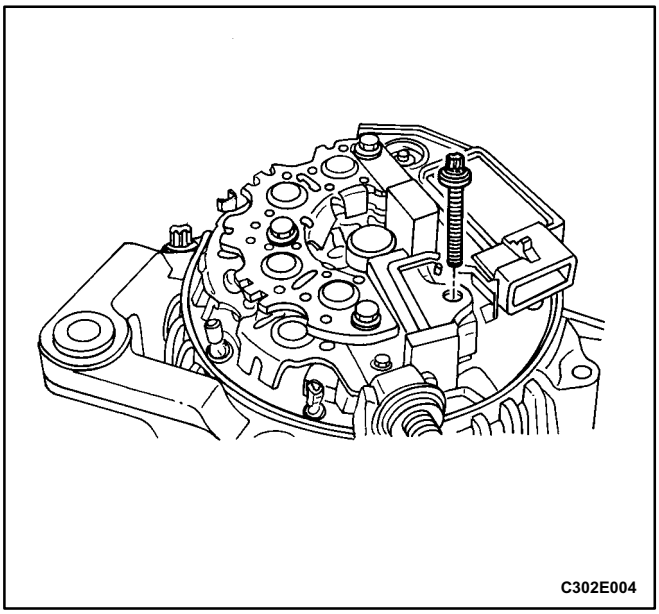

10. Solder the terminal of the regulator/brush holder assembly to the rectifier assembly and fasten the rectifier and the regulator/brush holder assemblies to the slip ring end frame with the bolts.
11. Tighten the rectifier and regulator/brush holder assembly bolts until they are touching their respective mounting plates, and tighten the bolts with an additional quarter turn.

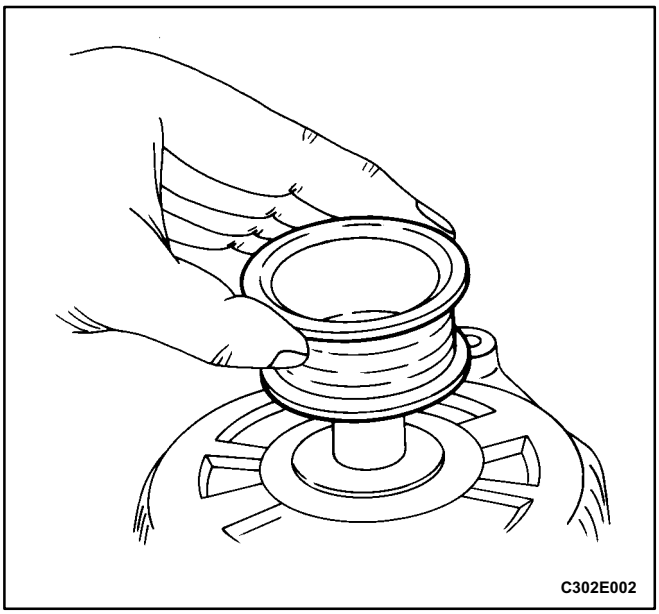

12. Snap on the cover.
13. Install the collar and pulley on the drive end shaft.

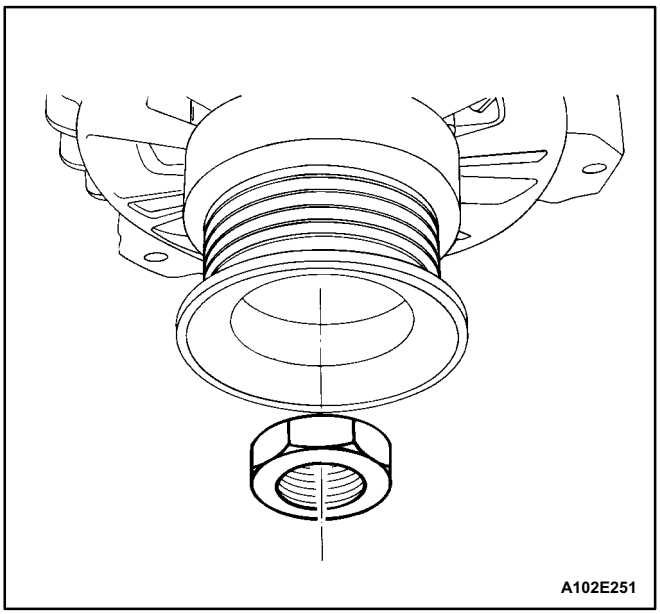

14. Install the drive shaft nut.

Tighten

Tighten the drive shaft nut to 100 N•m (74 lb•ft).

15. Install the generator. Refer to "Generator" in this section.

GENERAL DESCRIPTION AND SYSTEM OPERATION

BATTERY

The sealed battery is standard on all cars. There are no vent plugs in the cover. The battery is completely sealed, except for two small vent holes in the sides. These vent holes allow the small amount of gas produced in the battery to escape. The battery has the following advantages over conventional batteries:

- No water addition for the life of the battery.
- Overcharge protection. If too much voltage is applied to the battery, it will not accept as much current as a conventional battery. In a conventional battery, the excess voltage will still try to charge the battery, leading to gassing, which causes liquid loss.
- Not as liable to selfdischarge as a conventional battery. This is particularly important when a battery is left standing for long periods of time.
- More power available in a lighter, smaller case.

The battery has three major functions in the electrical system. First, the battery provides a source of energy for cranking the engine. Second, the battery acts as a voltage stabilizer for the electrical system. Finally, the battery can, for a limited time, provide energy when the electrical demand exceeds the output of the generator.

RATINGS

A battery has two ratings: (1) a reserve capacity rating designated at 27°C (80°F), which is the time a fully charged battery will provide 25 amperes of current flow at or above 10.5 volts; (2) a cold cranking amp rating determined under testing at 18°C (0°F), which indicates the cranking load capacity.

RESERVE CAPACITY

The reserve capacity (RC) is the maximum length of time it is possible to travel at night with the minimum electrical load and no generator output. Expressed in minutes, the RC rating is the time required for a fully charged battery, at a temperature of 27°C (80°F) and being discharged at a current of 25 amperes, to reach a terminal voltage of 10.5 volts.

COLD CRANKING AMPERAGE

The cold cranking amperage test is expressed at a battery temperature of 18°C (0°F). The current rating is the minimum amperage, which must be maintained by the battery for 30 seconds at the specified temperature, while meeting a minimum voltage requirement of 7.2 volts. This rating is a measure of cold cranking capacity.

The battery is not designed to last indefinitely. However, with proper care, the battery will provide many years of service.

If the battery tests well, but fails to perform satisfactorily in service for no apparent reason, the following factors may point to the cause of the trouble:

- Vehicle accessories are left on overnight.
- Slow average driving speeds are used for short periods.
- The vehicle's electrical load is more than the generator output, particularly with the addition of aftermarket equipment.
- Defects in the charging system, such as electrical shorts, a slipping generator belt, a faulty generator, or a faulty voltage regulator.
- Battery abuse, including failure to keep the battery cable terminals clean and tight, or a loose battery holddown clamp.
- Mechanical problems in the electrical system, such as shorted or pinched wires.

BUILT IN HYDROMETER

The sealed battery has a built-in, temperature compensated hydrometer in the top of the battery. This hydrometer is to be used with the following diagnostic procedure:

1. When observing the hydrometer, make sure that the battery has a clean top.
2. Under normal operation, two indications can be observed:
   - GREEN DOT VISIBLE - Any green appearance is interpreted as a green dot," meaning the battery is ready for testing.
   - DARK GREEN DOT IS NOT VISIBLE - If there is a cranking complaint, the battery should be tested. The charging and electrical systems should also be checked at this time.
3. Occasionally, a third condition may appear:
   - CLEAR OR BRIGHT YELLOW - This means the fluid level is below the bottom of the hydrometer. This may have been caused by excessive or prolonged charging, a broken case, excessive tipping, or normal battery wear. Finding a battery in this condition may indicate high charging by a faulty charging system. Therefore, the charging and the electrical systems may need to be checked if a cranking complaint exists. If the cranking complaint is caused by the battery, replace the battery.

CHARGING PROCEDURE

1. Batteries with the green dot showing do not require charging unless they have just been discharged, such as in cranking a vehicle.
2. When charging sealedterminal batteries out of the vehicle, install the adapter kit. Make sure all the charger connections are clean and tight. For best results, batteries should be charged while the electrolyte and the plates are at room temperature. A battery that is extremely cold may not accept current for several hours after starting the charger.
3. Charge the battery until the green dot appears. The battery should be checked every halfhour while

charging. Tipping or shaking the battery may be necessary to make the green dot appear.

4. After charging, the battery should be load tested. Refer to "Starter Motor" in this section.

CHARGING TIME REQUIRED

The time required to charge a battery will vary depending upon the following factors:

- **Size of Battery** - A completely discharged large heavy-duty battery requires more than twice the recharging time as a completely discharged small passenger car battery.
- **Temperature** - A longer time will be needed to charge any battery at 18°C (0°F) than at 27°C (80°F). When a fast charger is connected to a cold battery, the current accepted by the battery will be very low at first. The battery will accept a higher current rate as the battery warms.
- **Charger Capacity** - A charger which can supply only 5 amperes will require a much longer charging period than a charger that can supply 30 amperes or more.
- **State of Charge** - A completely discharged battery requires more than twice as much charge as a one-half charged battery. Because the electrolyte is nearly pure water and a poor conductor in a completely discharged battery, the current accepted by the battery is very low at first. Later, as the charging current causes the electrolyte acid content to increase, the charging current will likewise increase.

CHARGING A COMPLETELY DISCHARGED BATTERY (OFF THE VEHICLE)

Unless this procedure is properly followed, a perfectly good battery may be needlessly replaced.

The following procedure should be used to recharge a completely discharged battery:

1. Measure the voltage at the battery terminals with an accurate voltmeter. If the reading is below 10 volts, the charge current will be very low, and it could take some time before the battery accepts the current in excess of a few milliamperes. Refer to "Charging Time Required" in this section, which focuses on the factors affecting both the charging time required. Such low current may not be detectable on ammeters available in the field.
2. Set the battery charger on the high setting.

Important: Some chargers feature polarity protection circuitry, which prevents charging unless the charger leads are correctly connected to the battery terminals. A completely discharged battery may not have enough voltage to activate this circuitry, even though the leads are connected properly, making it appear that the battery will not accept charging current. Therefore, follow the specific charger manufacturer's instruction for bypassing or overriding the circuitry so that the charger will turn on and charge a low-voltage battery.

3. Continue to charge the battery until the charge current is measurable. Battery chargers vary in the amount of voltage and current provided. The time required for the battery to accept a measurable charger current at various voltages may be as follows:

Voltage	Hours
16.0 or more	Up to 4 hours
14.0-15.9	Up to 8 hours
13.9 or less	Up to 16 hours

- If the charge current is not measurable at the end of the above charging times, the battery should be replaced.
- If the charge current is measurable during the charging time, the battery is good, and charging should be completed in the normal manner.

Important: It is important to remember that a completely discharged battery must be recharged for a sufficient number of ampere hours (AH) to restore the battery to a usable state. As a general rule, using the reserve capacity rating (RC) as the number of ampere hours of charge usually brings the green dot into view.

- If the charge current is still not measurable after using the charging time calculated by the above method, the battery should be replaced.

JUMP STARTING PROCEDURE

1. Position the vehicle with the charged battery so that the jumper cables will reach from the charged battery to the battery that requires charging.
2. Turn off the ignition, all the lights, and all the electrical loads in both vehicles.
3. Leave the hazard flasher on if jump starting where there may be other traffic and any other lights needed for the work area.
4. Apply the parking brake firmly in both vehicles.

Notice: In order to avoid damaging the vehicle make sure the cables are not on or near pulleys, fans, or other parts that will move when the engine starts.

5. Shift an automatic transmission to PARK, or a manual transmission to NEUTRAL.

Caution: In order to avoid injury, do not use cables that have loose or missing insulation.

6. Clamp one end of the first jumper cable to the positive terminal on the booster battery. Make sure it does not touch any other metal parts.
7. Clamp the other end of the same cable to the positive terminal on the discharged battery. Never connect the other end to the negative terminal of the discharged battery.

Caution: Do not attach the cable directly to the negative terminal of the discharged battery. Doing so could cause sparks and possible battery explosion.

8. Clamp one end of the second cable to the negative terminal of the booster battery.
9. Make the final connection to a solid engine ground, such as the engine lift bracket at least 450 millimeters (18 inches) from the discharged battery.
10. Start the engine of the vehicle with the good battery. Run the engine at a moderate speed for several minutes.
11. Then start the engine of the vehicle with the discharged battery.
12. Remove the jumper cables by reversing the above sequence exactly, removing the negative cable from the vehicle with the discharged battery first. While removing each clamp, take care that it does not touch any other metal while the other end remains attached.

GENERATOR

The DelcoRemy CS charging system has several models available, including the CS-128D. The number denotes the outer diameter in millimeters of the stator lamination.

CS generators are equipped with internal regulators.

Unlike threewire generators, the CS-128D may be used with only two connections: battery positive and an ``L'' terminal to the charge indicator lamp.

As with other charging systems, the charge indicator lamp lights when the ignition switch is turned to RUN, and goes out when the engine is running. If the charge indicator is on with the engine running, a charging system defect is indicated. This indicator light will glow at full brilliance for several kinds of defects as well as when the system voltage is too high or too low.

The regulator voltage setting varies with temperature and limits the system voltage by controlling rotor field current. Achieve correct average field current for proper system voltage control by varying the on-off time. At high speeds, the on-time may be 10 percent and the off-time 90 percent. At low speeds, with high electrical loads, the on-time may be 90 percent and the off-time 10 percent.

CHARGING SYSTEM

CS generators use a new type of regulator that incorporates a diode trio. A Delta stator, a rectifier bridge, and a rotor with slip rings and brushes are electrically similar to earlier generators. A conventional pulley and fan are used. There is no test hole.

STARTER

Wound field starter motors have pole pieces, arranged around the armature, which are energized by wound field coils.

Enclosed shift lever cranking motors have the shift lever mechanism and the solenoid plunger enclosed in the drive housing, protecting them from exposure to dirt, icy conditions, and splashes.

In the basic circuit, solenoid windings are energized when the switch is closed. The resulting plunger and shift lever movement causes the pinion to engage the engine flywheel ring gear. The solenoid main contacts close. Cranking then takes place.

When the engine starts, pinion overrun protects the armature from excessive speed until the switch is opened, at which time the return spring causes the pinion to disengage. To prevent excessive overrun, the switch should be released immediately after the engine starts.

STARTING SYSTEM

The engine electrical system includes the battery, the ignition, the starter, the generator, and all the related wiring. Diagnostic tables will aid in troubleshooting system faults. When a fault is traced to a particular component, refer to that component section of the service manual.

The starting system circuit consists of the battery, the starter motor, the ignition switch, and all the related electrical wiring. All of these components are connected electrically.

SECTION 1F

ENGINE CONTROLS

CAUTION: Disconnect the negative battery cable before removing or installing any electrical unit or when a tool or equipment could easily come in contact with exposed electrical terminals. Disconnecting this cable will help prevent personal injury and damage to the vehicle. The ignition must also be in LOCK unless otherwise noted.

TABLE OF CONTENTS

Specifications 1F-6
Scan Tool Data Table (2.0L SOHC/DOHC) 1F-6
Scan Tool Data Table (2.2L DOHC) 1F-7
Engine Data Display Table Definitions 1F-15
Fastener Tightening Specifications 1F-18
Schematic and Routing Diagrams 1F-19
ECM Wiring Diagram (2.0L SOHC - 1 of 5) (IEFI-6 ECM) 1F-19
ECM Wiring Diagram (2.0L SOHC - 2 of 5) (IEFI-6 ECM) 1F-20
ECM Wiring Diagram (2.0L SOHC - 3 of 5) (IEFI-6 ECM) 1F-21
ECM Wiring Diagram (2.0L SOHC - 4 of 5) (IEFI-6 ECM) 1F-22
ECM Wiring Diagram (2.0L SOHC - 5 of 5) (IEFI-6 ECM) 1F-23
ECM Wiring Diagram (2.0L DOHC - 1 of 5) (ITMS-6F ECM) 1F-24
ECM Wiring Diagram (2.0L DOHC - 2 of 5) (ITMS-6F ECM) 1F-25
ECM Wiring Diagram (2.0L DOHC - 3 of 5) (ITMS6F ECM) 1F-26
ECM Wiring Diagram (2.0L DOHC - 4 of 5) (ITMS-6F ECM) 1F-27
ECM Wiring Diagram (2.0L DOHC - 5 of 5) (ITMS-6F ECM) 1F-28
ECM Wiring Diagram (2.2L DOHC - 1 of 6) (ISFI-6TD ECM) 1F-29
ECM Wiring Diagram (2.2L DOHC - 2 of 6) (ISFI-6TD ECM) 1F-30
ECM Wiring Diagram (2.2L DOHC - 3 of 6) (ISFI-6TD ECM) 1F-31
ECM Wiring Diagram (2.2L DOHC - 4 of 6) (ISFI-6TD ECM) 1F-32
ECM Wiring Diagram (2.2L DOHC - 5 of 6) (ISFI-6TD ECM) 1F-33
ECM Wiring Diagram (2.2L DOHC - 6 of 6) (ISFI-6TD ECM) 1F-34
Connector End View 1F-35
Component Locator 1F-41
Component Locator (2.0L SOHC) 1F-41
Component Locator (2.0L DOHC) 1F-42
Component Locator (2.2L DOHC) 1F-43
Diagnosis (2.0L SOHC / DOHC) 1F-44
Trouble Code Diagnosis 1F-44
Clearing Trouble Codes 1F-44
Idle Learn Procedure 1F-44
Diagnostic System Check (2.0L SOHC) 1F-44
Diagnostic System Check (2.0L DOHC) 1F-46
Diagnostic Aids 1F-48
Engine Cranks But Will Not Start (2.0L SOHC) 1F-49
Engine Cranks But Will Not Start (2.0L DOHC) 1F-55
No Service Malfunction Indicator Lamp (2.0L SOHC) 1F-62
No Service Malfunction Indicator Lamp (2.0L DOHC) 1F-66
Will Not Flash Malfunction Indicator Lamp Lamp (2.0L SOHC) 1F-70
Will Not Flash Malfunction Indicator Lamp Lamp (2.0L DOHC) 1F-72
Fuel System Pressure Test 1F-74
Fuel Pump Relay Circuit Check (2.0L SOHC) 1F-82
Fuel Pump Relay Circuit Check (2.0L DOHC) 1F-86
Ignition 1 Relay Circuit Check 1F-94
Manifold Absolute Pressure Check (2.0L SOHC) 1F-96
Manifold Absolute Pressure Check (2.0L DOHC) 1F-98
Park/Neutral Switch (2.0L SOHC) 1F-100
Park/Neutral Switch (2.0L DOHC) 1F-102
Idle Air Control System Check (2.0L SOHC) 1F-104
Idle Air Control System Check (2.0L DOHC) 1F-108
Ignition System Check (2.0L SOHC) 1F-112
Ignition System Check (2.0L DOHC) 1F-116
Engine Cooling Fan Circuit Check With A/C (2.0L SOHC) 1F-120
Engine Cooling Fan Circuit Check - With A/C (2.0L DOHC) 1F-128
Engine Cooling Fan Circuit Check - Without A/C (2.0L SOHC) 1F-136
Engine Cooling Fan Circuit Check - Without A/C (2.0L DOHC) 1F-142

Fuel Injector Balance Test 1F-149
DTC 3 Fan Number Two Low (2.0L DOHC) 1F-150
DTC 4 Fan Number Two High (2.0L DOHC) 1F-154
DTC 5 Fan Number One Low (2.0L DOHC) 1F-156
DTC 6 Fan Number One High (2.0L DOHC) 1F-158
DTC 7 Back Pressure Exhaust Gas Recirculation On/Off Solenoid Low Error (2.0L DOHC) 1F-160
DTC 8 Back Pressure Exhaust Gas Recirculation On/Off Solenoid High Error (2.0L DOHC) 1F-162
DTC 12 No Pulse Reference, Engine Not Running (2.0L SOHC IEFI6 and 2.0L DOHC ITMS6F) 1F-164
DTC 13 Oxygen Sensor Not Toggling (2.0L SOHC) 1F-166
DTC 13 Oxygen Sensor Not Toggling (2.0L DOHC) 1F-170
DTC 14 Coolant Temperature High (2.0L SOHC) 1F-174
DTC 14 Coolant Temperature High (2.0L DOHC) 1F-178
DTC 15 Coolant Temperature Low (2.0L SOHC) 1F-182
DTC 15 Coolant Temperature Low (2.0L DOHC) 1F-186
DTC 16 Knock Sensor Failure (2.0L DOHC) 1F-190
DTC 17 Injector Shorted to Ground/Battery (2.0L DOHC) 1F-192
DTC 18 Knock Sensor Activity Failure (2.0L DOHC) 1F-196
DTC 19 58X Signal Error (A and B) (2.0L SOHC) 1F-198
DTC 19 58X Signal Error (A and B) (2.0L DOHC) 1F-200
DTC 21 Throttle Position Sensor High (2.0L SOHC) 1F-202
DTC 21 Throttle Position Sensor High (2.0L DOHC) 1F-204
DTC 22 Throttle Position Sensor Low (2.0L SOHC) 1F-206
DTC 22 Throttle Position Sensor Low (2.0L DOHC) 1F-208
DTC 23 Manifold Air Temperature High (2.0L SOHC) 1F-210
DTC 23 Manifold Air Temperature High (2.0L DOHC) 1F-212
DTC 24 Vehicle Speed Sensor Error (2.0L SOHC) 1F-214
DTC 24 Vehicle Speed Sensor Error (2.0L DOHC) 1F-216
DTC 25 Manifold Air Temperature Low (2.0L SOHC) 1F-218
DTC 25 Manifold Air Temperature Low (2.0L DOHC) 1F-220
DTC 29 Fuel Pump Relay Shorted to Ground (2.0L DOHC) 1F-222
DTC 32 Fuel Pump Relay Shorted to Battery (2.0L DOHC) 1F-224
DTC 33 Manifold Absolute Pressure Sensor High (2.0L SOHC) 1F-226
DTC 33 Manifold Absolute Pressure Sensor High (2.0L DOHC) 1F-230
DTC 34 Manifold Absolute Pressure Sensor Low (2.0L SOHC) 1F-234
DTC 34 Manifold Absolute Pressure Sensor Low (2.0L DOHC) 1F-238
DTC 35 Idle Air Control Error (2.0L DOHC) 1F-242
DTC 41 Electronic Spark Timing B" Shorted to Battery (2.0L SOHC) 1F-246
DTC 41 Electronic Spark Timing B" Shorted to Battery (2.0L DOHC) 1F-248
DTC 42 Electronic Spark Timing A" Shorted to Battery (2.0L SOHC) 1F-250
DTC 42 Electronic Spark Timing A" Shorted to Battery (2.0L DOHC) 1F-252
DTC 44 Oxygen Sensor Lean (2.0L SOHC) 1F-254
DTC 44 Oxygen Sensor Lean (2.0L DOHC) 1F-256
DTC 45 Oxygen Sensor Rich (2.0L SOHC) 1F-258
DTC 45 Oxygen Sensor Rich (2.0L DOHC) 1F-260
DTC 49 Battery Voltage Too High (2.0L DOHC) 1F-262
DTC 51 Checksum or KKPGMID Error (2.0L SOHC and 2.0L DOHC) 1F-263
DTC 53 ECM Immobilizer Error (2.0L SOHC and 2.0L DOHC) 1F-264
DTC 54 CO Adjust Error (2.0L SOHC - Leaded Fuel Only) 1F-266
DTC 54 CO Adjust Error (2.0L DOHC - Leaded Fuel Only) 1F-268
DTC 55 EEPROM or Config Reg Error (2.0L DOHC) 1F-270
DTC 61 Controlled Canister Purge Solenoid Shorted to Ground (2.0L DOHC) 1F-272
DTC 62 Controlled Canister Purge Solenoid Shorted to Battery (2.0L DOHC) 1F-274
DTC 63 Electronic Spark Timing B" Shorted to Ground (2.0L SOHC) 1F-276
DTC 63 Electronic Spark Timing B" Shorted to Ground (2.0L DOHC) 1F-278
DTC 64 Electronic Spark Timing A" Shorted to Ground (2.0L SOHC) 1F-280
DTC 64 Electronic Spark Timing A" Shorted to Ground (2.0L DOHC) 1F-282
DTC 87 Air Conditioning Compressor Shorted to Ground (2.0L DOHC) 1F-284

DTC 88 Air Conditioning Compressor Shorted to Battery (2.0L DOHC) 1F-286
DTC 92 QDM Failure (2.0L SOHC) 1F-288
DTC 93 QDM Failure (2.0L DOHC) 1F-292
Diagnosis (2.2L DOHC) 1F-295
System Diagnosis 1F-295
Diagnostic Aids 1F-295
Idle Learn Procedure 1F-295
OnBoard Diagnostic (OBD) System Check 1F-296
ECM Output Diagnosis 1F-298
Multiple ECM Information Sensor DTCs Set 1F-300
Engine Cranks But Will Not Run 1F-305
No Malfunction Indicator Lamp 1F-312
Malfunction Indicator Lamp On Steady 1F-316
Fuel System Diagnosis 1F-318
Fuel Pump Relay Circuit Check 1F-322
Ignition 1 Relay Circuit Check 1F-326
Manifold Absolute Pressure Check 1F-328
Park/Neutral Position Switch 1F-330
Idle Air Control System Check 1F-332
Ignition System Check 1F-336
Engine Cooling Fan Circuit Check 1F-340
Data Link Connector Diagnosis 1F-348
Fuel Injector Balance Test 1F-352
EVAP Control System Diagnosis 1F-354
Trouble Code Diagnosis 1F-357
Clearing Trouble Codes 1F-357
Diagnostic Trouble Codes 1F-357
DTC P0106 Manifold Absolute Pressure Rationality 1F-360
DTC P0107 Manifold Absolute Pressure Low Voltage 1F-362
DTC P0108 Manifold Absolute Pressure High Voltage 1F-366
DTC P0112 Intake Air Temperature Low Voltage 1F-370
DTC P0113 Intake Air Temperature High Voltage 1F-372
DTC P0117 Engine Coolant Temperature Low Voltage 1F-376
DTC P0118 Engine Coolant Temperature High Voltage 1F-378
DTC P0122 Throttle Position Sensor Low Voltage 1F-382
DTC P0123 Throttle Position Sensor High Voltage 1F-386
DTC P0131 O2 Bank 1 Sensor 1 Low Voltage 1F-390
DTC P0132 O2 Bank 1 Sensor 1 High Voltage 1F-394
DTC P0134 O2 Bank 1 Sensor 1 No Activity 1F-398
DTC P0137 O2 Bank 1 Sensor 2 Low Voltage 1F-402
DTC P0138 O2 Bank 1 Sensor 2 High Voltage 1F-406
DTC P0140 O2 Bank 1 Sensor 2 No Activity 1F-410
DTC P0141 O2 Bank 1 Sensor 2 Heater 1F-414
DTC P0201 Injector 1 Circuit Fault 1F-418
DTC P0202 Injector 2 Circuit Fault 1F-422
DTC P0203 Injector 3 Circuit Fault 1F-426
DTC P0204 Injector 4 Circuit Fault 1F-430
DTC P0325 Knock Sensor SNEF Internal Malfunction 1F-434
DTC P0327 Knock Sensor Circuit Fault 1F-436
DTC P0336 58X Crank Position Extra/ Missing Pulses 1F-440
DTC P0337 58X Crank Position No Signal 1F-444
DTC P0342 Cam Position No Signal 1F-448
DTC P0351 Ignition Control A Circuit Fault 1F-452
DTC P0352 Ignition Control B Circuit Fault 1F-454
DTC P0404 Exhaust Gas Recirculation Open Valve Position Error 1F-456
DTC P0405 Exhaust Gas Recirculation Pintle Position Low Voltage 1F-460
DTC P0406 Exhaust Gas Recirculation Pintle Position High Voltage 1F-464
DTC P0443 Evaporative Emission System Purge Control Circuit 1F-468
DTC P0480 Cooling Fan Relay 1 Fan Control Circuit Fault 1F-472
DTC P0481 Cooling Fan Relay 2 Fan Control Circuit Fault 1F-476
DTC P0502 Vehicle Speed (Engine Side) No Signal 1F-480
DTC P0506 Idle Speed RPM Lower Than Desired Idle Speed 1F-484
DTC P0507 Idle Speed RPM Higher Than Desired Idle Speed 1F-488
DTC P0562 System Voltage (Engine Side) Too Low 1F-492
DTC P0563 System Voltage (Engine Side) Too High 1F-494
DTC P0601 ECM (Engine Side) Checksum Fault 1F-496
DTC P1106 Manifold Absolute Pressure Intermittent High Voltage 1F-498
DTC P1107 Manifold Absolute Pressure Intermittent Low Voltage 1F-500
DTC P1111 Intake Air Temperature Intermittent High Voltage 1F-502

DTC P1112 Intake Air Temperature Intermittent Low Voltage 1F-506
DTC P1114 Engine Coolant Temperature Intermittent Low Voltage 1F-508
DTC P1115 Engine Coolant Temperature Intermittent High Voltage 1F-510
DTC P1121 Throttle Position Sensor Intermittent High Voltage 1F-514
DTC P1122 Throttle Position Sensor Intermittent Low Voltage 1F-516
DTC P1404 Exhaust Gas Recirculation Closed Valve Pintle Error 1F-518
DTC P1520 Park/Neutral Discrete Fault 1F-522
DTC P1625 ECM Internal System Reset 1F-524
DTC P1640 ODM Internal SPI Communication 1F-526
Symptom Diagnosis 1F-529
Important Preliminary Checks 1F-529
Intermittents 1F-529
Hard Start 1F-531
Surges or Chuggles 1F-533
Lack of Power, Sluggishness, or Sponginess 1F-535
Detonation/Spark Knock 1F-536
Hesitation, Sag, Stumble 1F-538
Cuts Out, Misses 1F-539
Poor Fuel Economy 1F-541
Rough, Unstable, or Incorrect Idle, Stalling 1F-542
Excessive Exhaust Emissions or Odors 1F-544
Dieseling, Run-On 1F-545
Backfire 1F-546
Maintenance and Repair 1F-547
On-Vehicle Service 1F-547
Fuel Tank 1F-547
Fuel Pump 1F-549
Fuel Filter 1F-550
Fuel Rail and Injectors (SOHC) 1F-550
Fuel Rail and Injectors (DOHC) 1F-552
Fuel Pressure Regulator (SOHC) 1F-555
Fuel Pressure Regulator (DOHC) 1F-556
Coolant Temperature Sensor (Typical) 1F-558
Throttle Position Sensor (Typical) 1F-558
Throttle Body (SOHC) 1F-559
Throttle Body (DOHC) 1F-561
Oxygen Sensor (Typical) 1F-563
Oxygen Sensor (O2S 1) - 2.2L DOHC 1F-564
Heated Oxygen Sensor (HO2S 2) - 2.2L DOHC 1F-564
Manifold Air Temperature Sensor (Typical) 1F-566
Idle Air Control Valve (Typical) 1F-566
Manifold Absolute Pressure Sensor (SOHC) 1F-567
Manifold Absolute Pressure Sensor (DOHC) 1F-568
Exhaust Gas Recirculation Valve (SOHC) . . . 1F-569
Exhaust Gas Recirculation Valve (DOHC) . . . 1F-571
Knock Sensor (DOHC) 1F-572
Evaporative Emission Canister 1F-573
Controlled Canister Purge Solenoid 1F-574
Crankshaft Position Sensor (Typical) 1F-574
Camshaft Position Sensor 1F-576
Electronic Control Module (Typical) 1F-577
Direct Ignition System Ignition Coil (Typical) 1F-578
Fuel Cutoff Switch 1F579
General Description and System Operation 1F-580
Ignition System Operation 1F-580
Direct Ignition System Ignition Coil 1F-580
Crankshaft Position Sensor 1F-580
Camshaft Position Sensor 1F-580
Idle Air System Operation 1F-580
Fuel Control System Operation (2.0L SOHC/DOHC) 1F-580
Fuel Control System Operation (2.2L DOHC) 1F-581
Evaporative Emission Control System Operation 1F-582
Evaporative Emission Canister 1F-583
Positive Crankcase Ventilation Control System Operation 1F-583
Coolant Temperature Sensor 1F-583
Throttle Position Sensor 1F-583
Oxygen Sensor (2.0L SOHC/DOHC) 1F-583
Catalyst Monitor Oxygen Sensors (2.2L DOHC) 1F-583
Exhaust Gas Recirculation Valve 1F-584
Manifold Air Temperature Sensor 1F-584
Idle Air Control Valve 1F-584
Manifold Absolute Pressure Sensor 1F-585
Electronic Control Module 1F-585
Fuel Injector 1F-586
Fuel Cutoff Switch 1F-586
Knock Sensor (DOHC) 1F-586
Strategy-Based Diagnostics 1F-586
OBD Serviceability Issues 1F-587
Serial Data Communications 1F-588
Diagnostic (OBD) 1F-588
Component Monitor Diagnostic Operation 1F-588
Common OBD Terms 1F-589
DTC Types 1F-590
Diagnostic Trouble Codes 1F-591
Primary System-Based Diagnostics 1F-592
Octane Number Connector 1F-594

SPECIFICATIONS

SCAN TOOL DATA TABLE (2.0L SOHC/DOHC)

Parameter	Units Displayed	Typical Data Value
Engine Speed	rpm	±50 rpm from desired rpm in drive (A/T) ±50 rpm from desired rpm in neutral (M/T)
Desired Idle	rpm	ECM idle command (varies with temperature)
Engine Coolant Temperature	degrees Celsius	85-105°C
MAT/Internal Air Temperature	degrees Celsius	10-90°C
MAP	kPa/volts	29-48 kPa/1-2 volts (varies with manifold and barometric pressure)
Barometric Pressure	kPa/volts	varies with altitude
Fueling Mode	open/closed	"Closed Loop" (may enter "Open Loop" at extended idle)
Throttle Position	volts	0.3-1.0 V
Air/Fuel Ratio	-	-
Oxygen Sensor Signal	millivolts	11000 mv (varies continuously)
Injector Pulse Width	milliseconds	0.8-2.5 ms
Spark Advance	degrees	varies
Fuel Trim Integrator	counts	110 ~ 145
Block Lever	counts	115 ~ 138
Idle Air Control	counts	1-50
P/N Switch (A/T Only)	P-N and R-D-L	Park/Neutral (P/N)
Vehicle Speed	kph, mph	0
Air Conditioning Pressure	kPa	varies
Ignition/Battery Voltage	volts	13.5-14.8 V
Cooling Fan Relay	on/off	on/off
A/C Request	yes/no	no
A/C Clutch Relay	on/off	off
Low Fan Request	on/off	on/off
Prom ID	0-9999	PROM ID number varies
Canister Purge Solenoid	on/off	off
CO Adjust (Lead Fuel)	count	128
High-Speed Fan	on/off	off

SCAN TOOL DATA TABLE (2.2L DOHC)

Engine Data Display 01

Selected by 2: Data Display 1: Engine Data

2.2L Manual Transmission

Parameter	Units Displayed	Typtical Data Value
Engine Speed	rpm	±100 rpm from the Desired rpm
Desired Idle	rpm	ECM Idle Command
Engine Coolant Temperature	degrees Celsius	85°-115°C (185°-239°F)
Intake Air Temperature	degrees Celsius	10°-80°C (50°-176°F)
Throttle Position	%	0% (up to 100% at wide open throttle)
Throttle Position	Volts	0.200-0.900v (up to 5.0 at wide open throttle)
MAP	kPa	25-35 kPa
BARO	kPa	65-100 kPa (varies with altitude and with the BARO pressure)
EGR Actual Position	%	0%
EGR Desired Position	%	0-100%
EGR Feedback	Volt	
IAC Position	Counts	5-60
Cam Speed Activity	Counts	0-255
Ignition Voltage	Volts	12.0-15.0
Engine Run Time	Seconds	00:00:00-18:12:15 (hours:minutes:seconds)
BPW Bank 1	ms	0-999.9
Air Fuel Ratio	x:1	0:1-25.5:1
Spark	Degrees	64 to -64
Knock Retard	Degrees	0-90
Knock Active Counter	Counts	0-255
Knock Present	Yes / No	-
Calculated Load	%	0-100
Vehicle Speed	km/h	0-255
Air Condition Pressure	Volt	0-5
Oxygen Bank 1 Sensor 1	mV	0-1132
Oxygen Bank 1 Sensor 2	mV	0-1132
Decel Fuel Mode	Yes / No	-
Power Enrichment Mode	Yes / No	-
Closed Loop	Yes / No	-
Loop Status	See Table 3	
Hot Loop Open	Yes / No	-
Rich/Lean Bank 1	Rich / Lean	-
Short Term Fuel Trim	%	-100 to 100
Long Term Fuel Trim	%	-100 to 100

Engine Data Display 01 (Cont'd)

Parameter	Units Displayed	Typtical Data Value
EVAP Purge Solenoid	%	0-100
EVAP Vent Solenoid	On / Off	-
IAC Base Position	Counts	0-255
Fuel Trim Cell	Cell	
Calculated Air Flow	g/sec=n/128	0-512
Weak Cylinder	See Table 01	-
Rough Road Sensor	Volt	
5 Volt Reference	Volt	
Throttle at Idle	Yes / No	-
Power Steering Cramp	Yes / No	-
Air Conditioning Request	On / Off	-
Air Conditioning Clutch	On / Off	-
Fuel Pump	On / Off	-
Malfunction Indicator Lamp	On / Off	-
Upshift Lamp	On / Off	-
Low Fuel Lamp	On / Off	-
Hot Open Loop Lamp	On / Off	-
Variable Gate Intake	Long / Short	-
Fuel Trim Learned	On / Off	-
Fan 1	On / Off	-
Fan 2	On / Off	-

Engine Data Display 04
Selected by 2: Data Display 1: Engine Data
2.2L Automatic Transmission

Parameter	Units Displayed	Typtical Data Value
Engine Speed	rpm	±100 rpm from the Desired rpm
Desired Idle	rpm	ECM Idle Command
Engine Coolant Temperature	degrees Celsius	85°-115°C (185°-239°F)
Intake Air Temperature	degrees Celsius	10°-80°C (50°-176°F)
Throttle Position	%	0% (up to 100% at wide open throttle)
Throttle Position	Volts	0.200-0.900V (up to 5.0 at wide open throttle)
MAP	kPa	25-35 kPa
BARO	kPa	65-100 kPa (varies with altitude and with the BARO pressure)
EGR Actual Position	%	0%
EGR Desired Position	%	0-100%
EGR Feedback	Volt	

Engine Data Display 04 (Cont'd)

Parameter	Units Displayed	Typtical Data Value
IAC Position	Counts	5-
Cam Speed Activity	Counts	0-255
Ignition Voltage	Volts	12.0-15.0
Engine Run Time	Seconds	00:00:00-18:12:15 (hours:minutes:seconds)
BPW Bank 1	ms	0-999.9
Air Fuel Ratio	x:1	0:1-25.5:1
Spark	Degrees	64 to -64
Knock Retard	Degrees	0-90
Knock Active Counter	Counts	0-255
Knock Present	Yes / No	-
Calculated Load	%	0-100
Vehicle Speed	km/h	0-255
Air Condition Pressure	Volt	0-5
Oxygen Bank 1 Sensor 1	mV	0-1132
Oxygen Bank 1 Sensor 2	mV	0-1132
Decel Fuel Mode	Yes / No	-
Power Enrichment Mode	Yes / No	-
Closed Loop	Yes / No	-
Loop Status	See Table 3	-
Hot Loop Open	Yes / No	-
Rich/Lean Bank 1	Rich / Lean	-
Short Term Fuel Trim	%	-100 to 100
Long Term Fuel Trim	%	-100 to 100
EVAP Purge Solenoid	%	0-100
EVAP Vent Solenoid	On / Off	-
IAC Base Position	Counts	0-255
Fuel Trim Cell	Cell	
Calculated Air Flow	g/sec=n/128	0-512
Weak Cylinder	See Table 01	-
Rough Road Sensor	Volt	
5 Volt Reference	Volt	
Throttle at Idle	Yes / No	-
Power Steering Cramp	Yes / No	-
Air Conditioning Request	On / Off	-
Air Conditioning Clutch	On / Off	-
Fuel Pump	On / Off	-
Malfunction Indicator Lamp	On / Off	-
Upshift Lamp	On / Off	-
Low Fuel Lamp	On / Off	-

Engine Data Display 04 (Cont'd)

Parameter	Units Displayed	Typtical Data Value
Hot Open Loop Lamp	On / Off	-
Variable Gate Intake	Long / Short	-
Fuel Trim Learned	On / Off	-
Fan 1	On / Off	-
Fan 2	On / Off	-
Park/Neutral	Yes / No	-

EVAP Data Display 01
Selected by 2: Data Display 2: Specific Data 1: EVAP
Manual Transmission

Parameter	Units Displayed	Typtical Data Value
Engine Speed	rpm	±100 rpm from the Desired rpm
Ignition Voltage	Volts	12.0-15.0
Engine Coolant Temperature	degrees Celsius	85°-115°C (185°-239°F)
Start Up Coolant Temperature	degrees Celsius	4°-34°C (39°-93°F)
Intake Air Temperature	degrees Celsius	10°-80
Start Up Intake Air Temperature	degrees Celsius	12°-42°C (54°-108°F)
Engine Run Time	Seconds	00:00:00-18:12:15 (hours:minutes:seconds)
Fuel Level Sensor	Volt	0.4-4.5
Fuel Gauge	On / Off	-
EVAP Purge Solenoid	%	0-100
EVAP Vent Solenoid	On / Off	-
EVAP Tank Vacuum	in H_2O = n(25/65535)±7.5	
Throttle Position	%	0% (up to 100% at wide open throttle)
Throttle Position	Volts	0.200-0.900V (up to 5.0 at wide open throttle)
IAC Position	Counts	5-60
BPW Bank 1	ms	0-999.9
Air Fuel Ratio	x:1	0:1-25.5:1
Spark	Degrees	64 to -
MAP	kPa	25-35 kPa
BARO	kPa	65-100 kPa (varies with altitude and with the BARO pressure)
Calculated Load	%	0-100
Vehicle Speed	mph	0-255
Oxygen Sensor Bank 1 Sensor 1	mV	0-1132
Oxygen Sensor Bank 1 Sensor 2	mV	0-1132

EVAP Data Display 02
Selected by 2: Data Display 2: Specific Data 1: EVAP
Automatic Transmission

Parameter	Units Displayed	Typtical Data Value
Engine Speed	rpm	±100 rpm from the Desired rpm
Ignition Voltage	Volts	12.0-15.0
Engine Coolant Temperature	degrees Celsius	85°-115°C (185°-239°F)
Start Up Coolant Temperature	degrees Celsius	4°-34°C (39°-93°F)
Intake Air Temperature	degrees Celsius	10°-80°
Start Up Intake Air Temperature	degrees Celsius	12°-42°C (54°-108°F)
Engine Run Time	Seconds	Varies (since start up)
Fuel Level Sensor	Volt	0.4-4.5
Fuel Gauge	On / Off	-
Park/Neutral	Yes / No	-
EVAP Purge Solenoid	%	0-100
EVAP Vent Solenoid	On / Off	-
EVAP Tank Vacuum	in H_2O = n(25/65535)7.5	
Fuel Tank Vacuum Sensor	Volt	0.0-5.0
Throttle Position	%	0% (up to 100% at wide open throttle)
Throttle Position	Volts	0.200-0.900v (up to 5.0 at wide open throttle)
IAC Position	Counts	5-60
BPW Bank 1	ms	0-999.9
Air Fuel Ratio	x:1	0:1-25.5:1
Spark	Degrees	64 to -64
MAP	kPa	25-35 kPa
BARO	kPa	65-100 kPa (varies with altitude and with the BARO pressure)
Calculated Load	%	0-100
Vehicle Speed	km/h	0-255
Oxygen Sensor Bank 1 Sensor 1	mV	0-1132
Oxygen Sensor Bank 1 Sensor 2	mV	0-1132

EVAP Service Bay Test
F5: Functional Tests-F5: Outputs-F5: EVAP Service Bay Test
All

Parameter	Units Displayed	Typtical Data Value
EVAP Service Bay Test State	see PID table 4	-
EVAP Service Bay Test Min. TPS	%	0-100
Throttle Position	%	0-100
EVAP Service Bay Test Max. TPS	%	0-100
EVAP Service Bay Test Abort Reason	see PID table 5	-
EVAP Service Bay Test Results	see PID table 6	-
EVAP Purge Solenoid	%	0-100

EVAP Service Bay Test (Cont'd)

Parameter	Units Displayed	Typtical Data Value
EVAP Vent Solenoid	On / Off	-
EVAP Tank Vacuum	in H_2O=n(25/65535)Z15	
Fuel Tank Vacuum Sensor	Volt	0.0-5.0
Engine Speed	rpm	±100 rpm from the Desired rpm
Ignition Voltage	Volts	12.0-15.0
Engine Coolant Temperature	degrees Celsius	85°-115
Start Up Coolant Temperature	degrees Celsius	4°-34°C (39°-93°F)
Intake Air Temperature	degrees Celsius	10°-80°C (50°-176°F)
Start Up Intake Air Temperature	degrees Celsius	12°-42°C (54°-108°F)
Engine Run Time	Seconds	00:00:00-18:12:15 (hours:min-utes:seconds)
Fuel Level Sensor	Volt	0.4-4.5
Fuel Gauge	On / Off	-

EGR Data Display
Selected by 2: Data Display 2: Specific Data 2: EGR
All Displays EGR01

Parameter	Units Displayed	Typtical Data Value
Engine Speed	rpm	±100 rpm from the Desired rpm
Ignition Voltage	Volts	12.0-15.0
IAC Position	Counts	0-255
Engine Coolant Temperature	degrees Celsius	85°-115°C (185°-239°F)
Throttle Position	%	0% (up to 100% at wide open throttle)
Throttle Position	Volts	0.200-0.900V (up to 5.0 at wide open throttle)
EGR Actual Position	%	0%
EGR Desired Position	%	0-100%
EGR Feedback	Volt	
EGR Closed Pintle Position	Counts	
EGR Trip Sample Count	Tests	
EGR EWMA Threshold	N	
EGR EWMA	Counts	
EGR Pintle Position Error	Counts	
Engine Run Time	Seconds	00:00:00-18:12:15 (hours:min-utes:seconds)
BPW Bank 1	ms	0-999.9
Air Fuel Ratio	x:1	0:1-25.2:1
Spark	Degrees	64 to -64
MAP	kPa	25-35 kPa
BARO	kPa	65-100 kPa (varies with altitude and with the BARO pressure)
Calculated Load	%	0-100
Vehicle Speed	mph	0-255

Oxygen Sensor Data Display
Selected by F2: Data Display F2: Specific Data F4: Oxygen Sensors
All Displays O2SO1

Parameter	Units Displayed	Typtical Data Value
Engine Speed	rpm	±100 rpm from the Desired rpm
Engine Run Time	N	00:00:00-18:12:15 (hours:min-utes:seconds)
Loop Status	Open / Closed	-
O2S 1 Bank 1 Sensor 1	mv	0-1132
O2S 1 Bank 1 Sensor 1	0=Not Ready, 1=Ready	-
Rich/Lean Bank 1	0=Lean, 1=Rich	-
Injector Pulse Bank 1	msec	
Start Up Coolant Temperature	degrees Celsius	4°-34°C (39°-93°F)
Engine Coolant Temperature	degrees Celsius	85°-115°C (185°-239°F)
Start Up Intake Air Temperature	degrees Celsius	12°-42°C (54°-108°F)
Intake Air Temperature	degrees Celsius	10°-80°C (50°-176°F)
O2S 1 Time to Activity Bank 1 Sensor 1	Seconds	
Short Term FT Bank 1	%	-100 to 100
Long Term FT Bank 1	%	-100 to 100
TP Angle	%	0-100
Calculated Air Flow	g/sec=n/128	0-512
MAP	kPa	25-35 kPa
EVAP Purge PWM	%	0-100
Ignition 1	Volts	12.0-15.0
Air Fuel Ratio	x:1	0:1-25.5:1
Decel Fuel Mode	0=Inactive, 1=Active	-
Power Enrichment	0=Inactive, 1=Active	-
HO2S 2 Warm Up Time Bank 1 Senor 1	Seconds	
HO2S 2 Bank 1 Sensor 2	mV	0-1132

Misfire Data Display
Selected by F2: Data Display F2: Specific Data F5: Misfire
All 2.2L Displays MISF01

Parameter	Units Displayed	Typtical Data Value
Misfire Current #1	Count	0-255
Misfire History #1	Count	0-255
Misfire Current #2	Count	0-255
Misfire History #2	Count	0-255
Misfire Current #3	Count	0-255
Misfire History #3	Count	0-255
Misfire Current #4	Count	0-255
Misfire History #4	Count	0-255
Misfire Failures Since First Fail	N	
Misfire Passes Since First Fail	N	
Total Misfire Current Count	Count	0-255
Weak Cylinder	See Table 01	-
Engine Speed	rpm	±100 rpm from the Desired rpm
TP Angle	%	0-100
Calculated Load	%	0-100
Engine Coolant Temperature	degrees Celsius	85°-115°C (185°-239°F)
Intake Air Temperature	degrees Celsius	10°-80°C (50°-176°F)
Cam Activity Counter	Counts	0-255
Spark	Degrees	64 to -64
G Sensor	Volts	
EGR Desired Position	%	0-100%
EGR Actual Position	%	0%
MAP	kPa	25-35 kPa
Vehicle Speed	mph	0-255
Air Conditioning Request	On / Off	-
Air Conditioning Clutch	On / Off	-
Knock Active Counter	Counts	0-255
Knock Retard	Degrees	0-90
Decel Fuel Mode	Yes / No	-
Power Enrichment Mode	Yes / No	-
Injector Pulse Bank 1	msec	
O2S 1 Bank 1 Sensor 1	mV	0-1132
HO2S 2 Bank 2 Sensor 1	mV	0-1132
Short Term FT Bank 1	%	-100 to 100
Long Term FT Bank 1	%	-100 to 100

TEC Display Table
Selected by 5: Engine Outputs 5: Engine Outputs
TEC01

Parameter	Units Displayed	Typtical Data Value
Engine Speed	rpm	±100 rpm from the Desired rpm
TP Angle	%	0-100
Engine Coolant Temperature	degrees Celsius	85°-115°C (185°-239°F)
Intake Air Temperature	degrees Celsius	10°-80°C (50°-176°F)
Cam Activity Counter	N	0-255
Spark	Degrees	64 to -64
MAP	kPa	25-35 kPa
Vehicle Speed	mph	0-255
Decel Fuel Mode	Yes / No	-
Power Enrichment Mode	Yes / No	-
Injector Pulse Bank 1	msec	
Crank Error Latched	Yes / No	-
Sum Out Of Range	Yes / No	-
Opposing Factor Out Of Range	Yes / No	-
Factor Out Of Range	Yes / No	-
Enable Criteria Not Met	Yes / No	-
Cat Damaging Misfire	Yes / No	-
Test is Running	Yes / No	-
Learned This Key Cycle	Yes / No	-
Attempts to Learn	Counts	

ENGINE DATA DISPLAY TABLE DEFINITIONS

ECM Data Description

The following information will assist in diagnosing emission or driveability problems. A first technician can view the displays while the vehicle is being driven by second technician. Refer to Powertrain On-Board Diagnostic (OBD) System Check for addition information.

A/C Clutch

The A/C Relay represents the commanded state of the A/C clutch control relay. The A/C clutch should be engaged when the scan tool displays ON.

A/C Pressure

The A/C High Side displays the pressure value of the A/C refrigerant pressure sensor. The A/C High Side helps to diagnose the diagnostic trouble code (DTC) P0533.

A/C Request

The A/C Request represents whether the air conditioning is being requested from the HVAC selector. The input is received by the instrument panel cluster and then sent over universal asynchronous receiver transmitter (UART) serial data to the ECM and finally to the scan tool over class 2 serial data.

Air Fuel Ratio

The Air Fuel Ration indicates the air to fuel ratio based on the Oxygen Sensor (O2S 1) inputs. The ECM uses the fuel trims to adjust fueling in order to attempt to maintain an air fuel ratio of 14.7:1.

BARO

The Barometric Pressure (BARO) sensor measures the change in the intake manifold pressure which results from altitude changes. This value is updated at ignition ON and also at Wide Open Throttle (WOT).

BPW Bank 1

Indicates the base Pulse Width Modulation (PWM) or ON time of the indicated cylinder injector in milliseconds. When the engine load is increased, the injector pulse width will increase.

Calculated Air Flow

The calculated air flow is a calculation based on manifold absolute pressure. The calculation is used in several diagnostics to determine when to run the diagnostics.

Camshaft Activity Counter

The Camshaft Position (CMP) activity counter displays the activity sent to the ECM from the CMP sensor. The counter will continually increment while the engine is running. The CMP activity counter is helpful in diagnosing DTC P0342.

Desired Idle

The ECM commands the idle speed. The ECM compensates for various engine loads in order to maintain the desired idle speed. The actual engine speed should remain close to the desired idle under the various engine loads with the engine idling.

Coolant Temperature

The Engine Coolant Temperature Sensor (CTS) sends engine temperature information to the ECM. The ECM supplies 5 volts to the engine coolant temperature sensor circuit. The sensor is a thermistor which changes internal resistance as temperature changes. When the sensor is cold (internal resistance high), the ECM monitors a high voltage which it interprets as a cold engine. As the sensor warms (internal resistance decreases), the voltage signal will decrease and the ECM will interpret the lower voltage as a warm engine.

EGR Desired Position

The desired exhaust gas recirculation (EGR) position is the commanded EGR position. The ECM calculates the desired EGR position. The higher the percentage, the longer the ECM is commanding the EGR valve ON.

Engine Run Time

The engine run time is a measure of how long the engine has been running. When the engine stops running, the timer resets to zero.

Engine Speed

Engine Speed is computed by the ECM from the fuel control reference input. It should remain close to desired idle under the various engine loads with the engine idling.

EVAP Purge

The Evaporative Emission (EVAP) purge valve solenoid is a proportional signal used in order to control the EVAP canister purge function. At 0% the valve is commanded fully closed. 100% implies that the valve is fully open.

EVAP Purge Solenoid

When energized, the EVAP Solenoid allows the fuel vapor to flow from the EVAP canister to the engine. The EVAP Solenoid is normally closed. The EVAP Solenoid is pulse width modulated by the ECM. The EVAP Solenoid reads 0% when closed and 100% when fully opened.

EVAP Vent Solenoid

The EVAP Vent Solenoid allows fresh outside air to the EVAP canister during purge mode. The EVAP Vent Solenoid allows the diagnostic to pull a vacuum on the fuel tank by closing the vent solenoid.

Fan

The Fan Control Relay is commanded by the ECM. The FC Relay displays the command as ON or OFF.

Fuel Level Sensor

The Fuel Level Sensor monitors the fuel level in the tank. The Fuel Level Sensor monitors the rate of change of the air pressure in the EVAP system. Several of the Enhanced EVAP System diagnostics are dependent upon the correct fuel level.

Fuel Tank Pressure Sensor

The fuel tank pressure sensor measures the difference between the pressure or the vacuum in the fuel tank and the outside air pressure. When the air pressure in the fuel tank equals the outside air pressure, the output voltage of the sensor is 1.3 to 1.7 volts.

IAC Position

The scan tool displays the ECM command for the Idle Air Control (IAC) pintle position in counts. The higher the number of counts, the greater the commanded idle speed reads. The Idle Air Control responds to changes in the engine load in order to maintain the desired idle rpm.

Intake Air Temperature

The ECM converts the resistance of the Intake Manifold Air Temperature (MAT) sensor to degrees in the same manner as the Engine Coolant Temperature Sensor (CTS). Intake air temperature is used by the ECM to adjust fuel delivery and spark timing according to incoming air density.

Ignition 1 (Voltage)

The ignition volts represent the system voltage measured by the ECM at the ignition feed circuit.

Knock Retard

The Knock Sensor (KS) Retard indicates the amount of spark advance the ECM is decreasing in response to the KS signal.

Knock Present

The KS Noise Channel indicates when the ECM detects the KS signal. The ECM should display NO at idle.

Calculated Load

Indicates engine load based on manifold absolute pressure. The higher the percentage, the more load the engine is under.

Long Term FT

The Long Term Fuel Trim (FT) is derived from the short term fuel trim value. The Long Term FT is used for the long term correction of the fuel delivery. A value of 128 counts (0%) indicates that the fuel delivery requires no compensation in order to maintain a 14.7:1 air to fuel ratio. A value below 128 counts means that the fuel system is too rich and the fuel delivery is being reduced. The ECM is decreasing the injector pulse width. A value above 128 counts indicates that a lean condition exists for which the ECM is compensating.

Long Term FT Average

Long Term FT Average is derived from the long term fuel trim from all of the cells. The ECM then takes all of the values and then creates one average value.

Loop Status

The Closed Loop is displayed indicating that the ECM is controlling the fuel delivery according to the Oxygen Sensor (O2S 1) voltage as close to an air/fuel ratio of 14.7 to 1 as possible.

MAP

The Manifold Absolute Pressure (MAP) sensor measures the change in the intake manifold pressure which results from engine load and speed changes. As the intake manifold pressure increases, the air density in the intake also increases and the additional fuel is required.

Misfire Current #14

Indicates the number of current misfires that are present in the indicated cylinder. Increments only when misfire is current.

Misfire History #14

Indicates the number of misfires that have occurred after 195 current misfires have been counted. The current misfire counter will add its misfires to the history misfire counter after 195 total misfires have taken place. If 1 cylinder is misfiring, the misfiring current counter will have 195 misfires counted before adding to its history counter. If 2 cylinders are misfiring, the misfiring current counter will add to their history counters after 97 misfires. The counter increments only after a misfire diagnostic trouble code (DTC) has been set.

Oxygen Sensor Bank 1 Sensor 1

The pre-converter Oxygen Sensor (O2S 1) reading represents the exhaust oxygen sensor output voltage. This voltage will fluctuate constantly between 100 mv (lean exhaust) and 900 mv (rich exhaust) when the system is operating in a Closed Loop.

Oxygen Sensor Bank 1 Sensor 2

The post-converter Heated Oxygen Sensor (HO2S 2) represents the exhaust oxygen output voltage past the catalytic converter. This voltage remains inactive, or the voltage will appear lazy within a range of 100 mv (lean exhaust) and 900 mv (rich exhaust) when operating in a Closed Loop.

Short Term FT

The Short Term FT represents a short term correction to fuel delivery by the ECM in response to the amount of time the oxygen sensor voltage spends above or below the 450 mv threshold. If the oxygen sensor has mainly been below 450 mv, indicating a lean air/fuel mixture, short term fuel trim will increase to tell the ECM to add fuel. If the oxygen sensor voltage stays mainly above the threshold, the ECM will reduce fuel delivery to compensate for the indicated rich condition.

Short Term FT Average

The Short Term FT Average is derived from the short term fuel trim from all of the cells. The ECM takes all of the values and then creates one average value.

Spark

This is a display of the spark advance Ignition Coil calculation which the ECM is programming in the ignition system. It computes the desired spark advance using data such as engine temperature, rpm, engine load, vehicle speed and operating mode.

Total Misfire Current Counter

Indicates the total number of misfires that have been detected in all the cylinders after 100 engine cycles. One cycle equals one complete 4 stroke cycle. The total misfire only increments during the steady state cruise conditions.

TP Angle

From the Throttle Position Sensor (TPS) voltage input, the ECM computes the TPS. The TPS Angle will auto zero to 0% at idle (TPS voltage below 0.90 volt). The TPS Angle will read 100% at WOT.

TPS

The ECM uses the TPS in order to determine the amount of the throttle demanded by the vehicle's operator. The TPS reads between 0.360.96 volts at idle to above 4 volts at WOT.

Vehicle Speed

The vehicle speed sensor signal is converted into mph or km/h for display. The vehicle speed output from the ECM is 4000 pulses per mile. The scan tool uses the class 2 serial data from the ECM to obtain vehicle speed, while the Instrument Panel Cluster, cruise control module and the chime alarm module use the 4000 ppm output.

FASTENER TIGHTENING SPECIFICATIONS

Application	N•m	Lb•Ft	Lb•In
Accessory Mounting Bracket Bolts	35	26	-
Camshaft Position Sensor Bolts	12	-	106
Controlled Canister Purge Solenoid Bracket Bolts	5	-	44
Coolant Temperature Sensor	25	18	-
Crankshaft Position Sensor (CPS) Retaining Bolt	10	-	89
Direct Ignition System (DIS) Ignition Coil Retaining Bolts	10	-	89
Evaporative Emission Canister Flange Bolt	20	15	-
Evaporative Emission Canister Protective Cover	8	-	71
Evaporative Emission Canister Purge Solenoid Bracket Bolts	5	-	44
Exhaust Gas Recirculation (EGR) Valve Retaining Bolts	20	15	-
Fuel Cutoff Switch Bolt	3	-	27
Fuel Injector Cover Bolts	10	-	89
Fuel Pressure Regulator Retaining Bolt	10	-	89
Fuel Pressure Regulator Retaining Clamp	12	-	106
Fuel Rail Retaining Bolts	25	18	-
Fuel Tank Strap Retaining Nuts	13	-	115
Heated Oxygen Sensor	41	30	-
Idle Air Control (IAC) Valve Retaining Bolts	3	-	27
Knock Sensor Bolt	20	15	-
Manifold Air Temperature (MAT) Sensor	20	15	-
Manifold Absolute Pressure (MAP) Sensor Retaining Bolt	10	-	89
Oxygen Sensor	41	30	-
Rear A/C Compressor Mounting Bracket Bolts	35	26	-
Throttle Body Retaining Nuts (DOHC)	9	-	80
Throttle Body Retaining Nuts (SOHC)	15	11	-
Throttle Cable Bracket Bolts	10	-	89
Throttle Position Sensor Retaining Bolts	2	-	18

SCHEMATIC AND ROUTING DIAGRAMS (2.0L SOHC/DOHC)

ECM WIRING DIAGRAM (2.0 SOHC - 1 OF 5) (IEFI6 ECM)

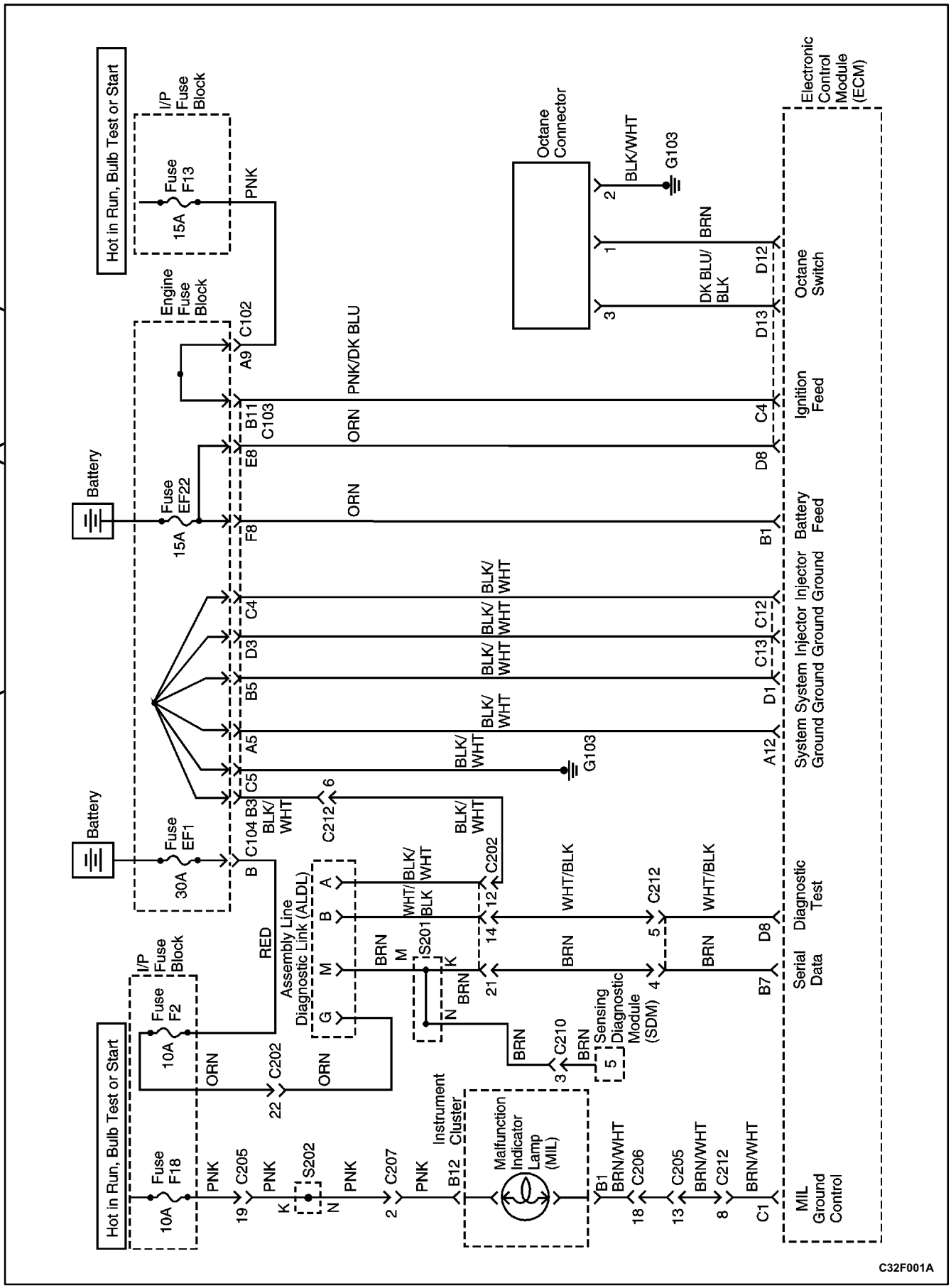

ECM WIRING DIAGRAM (2.0 SOHC - 2 OF 5) (IEFI6 ECM)

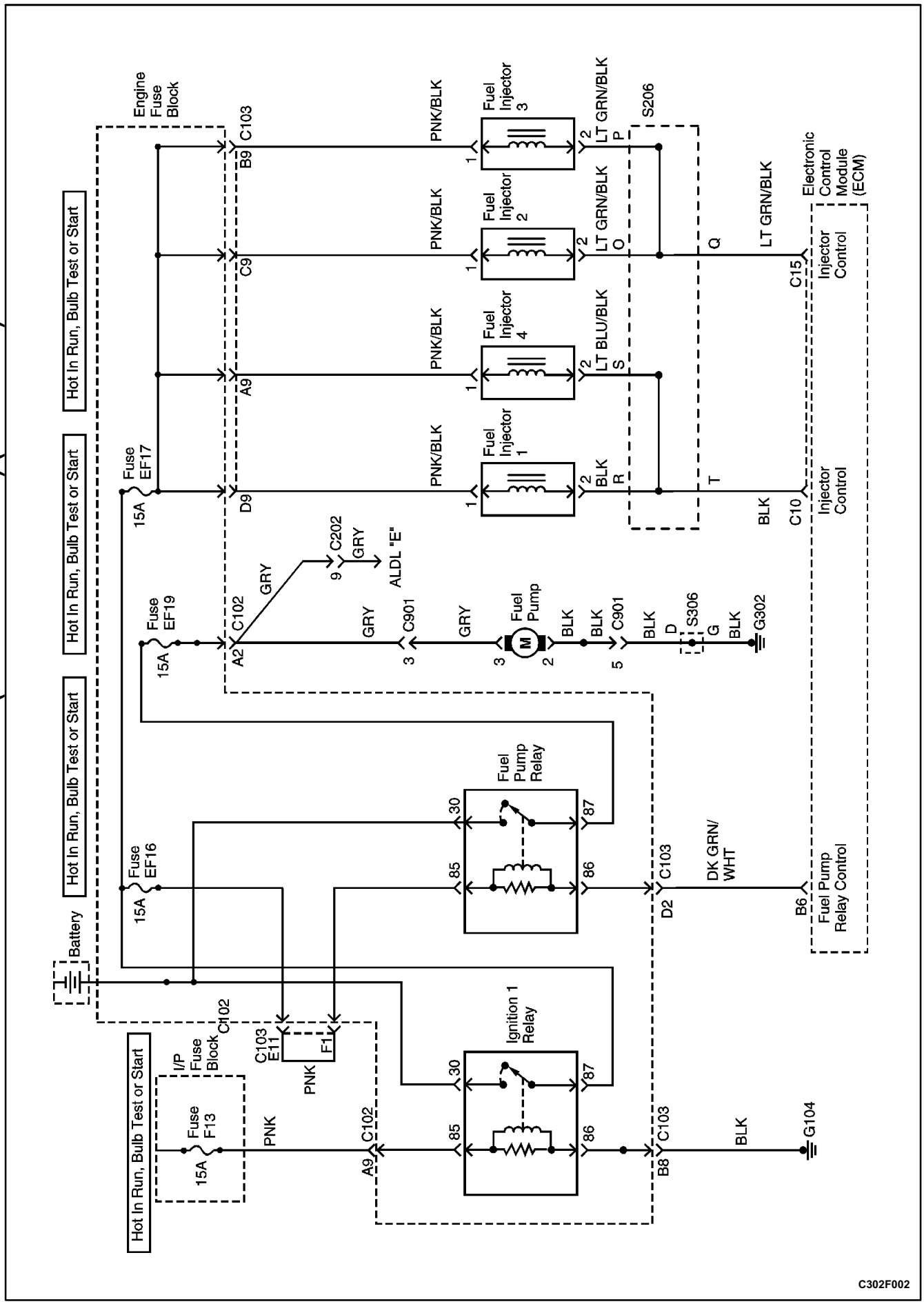

ECM WIRING DIAGRAM (2.0 SOHC - 3 OF 5) (IEFI6 ECM)

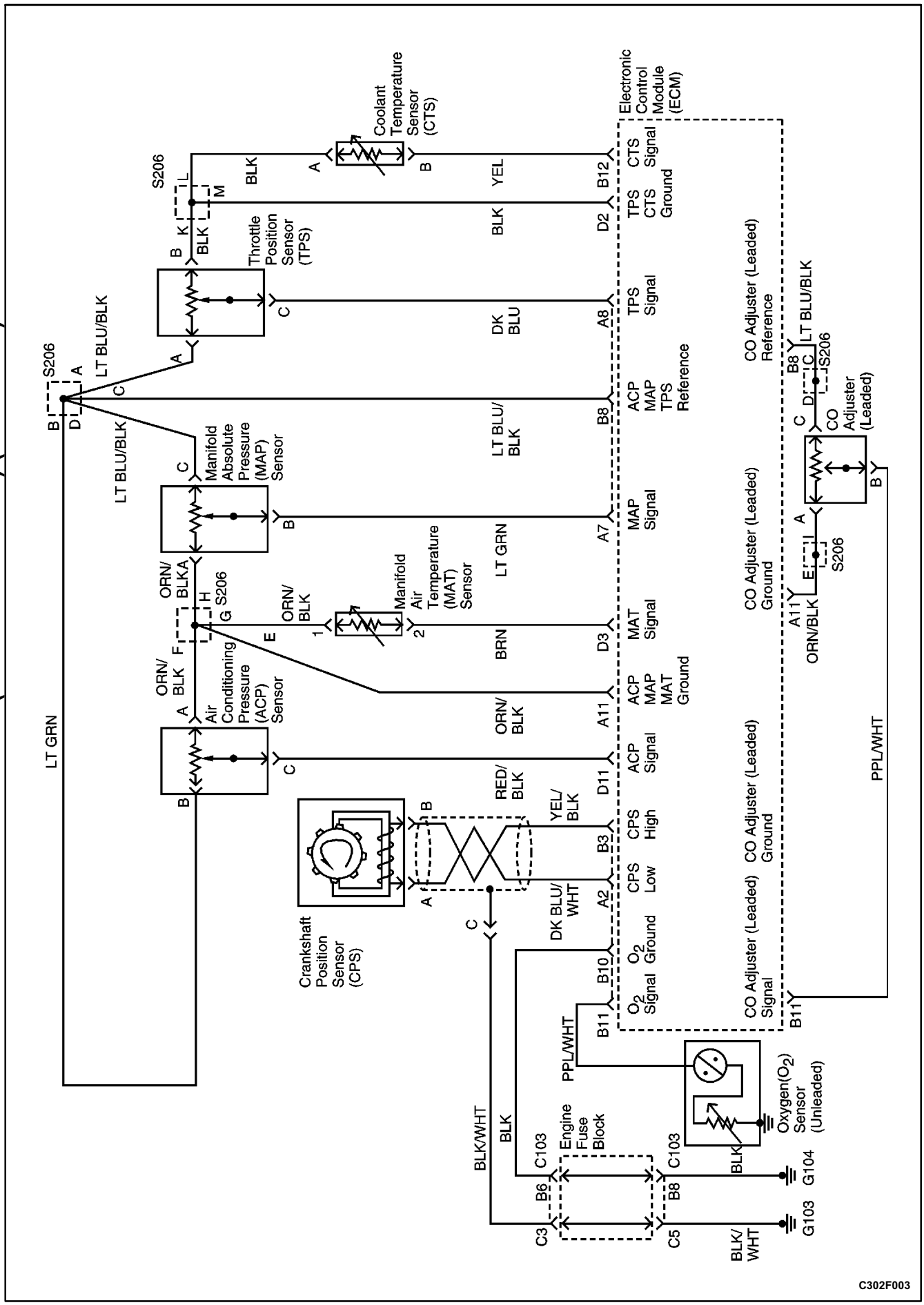

ECM WIRING DIAGRAM (2.0 SOHC - 4 OF 5) (IEFI6 ECM)

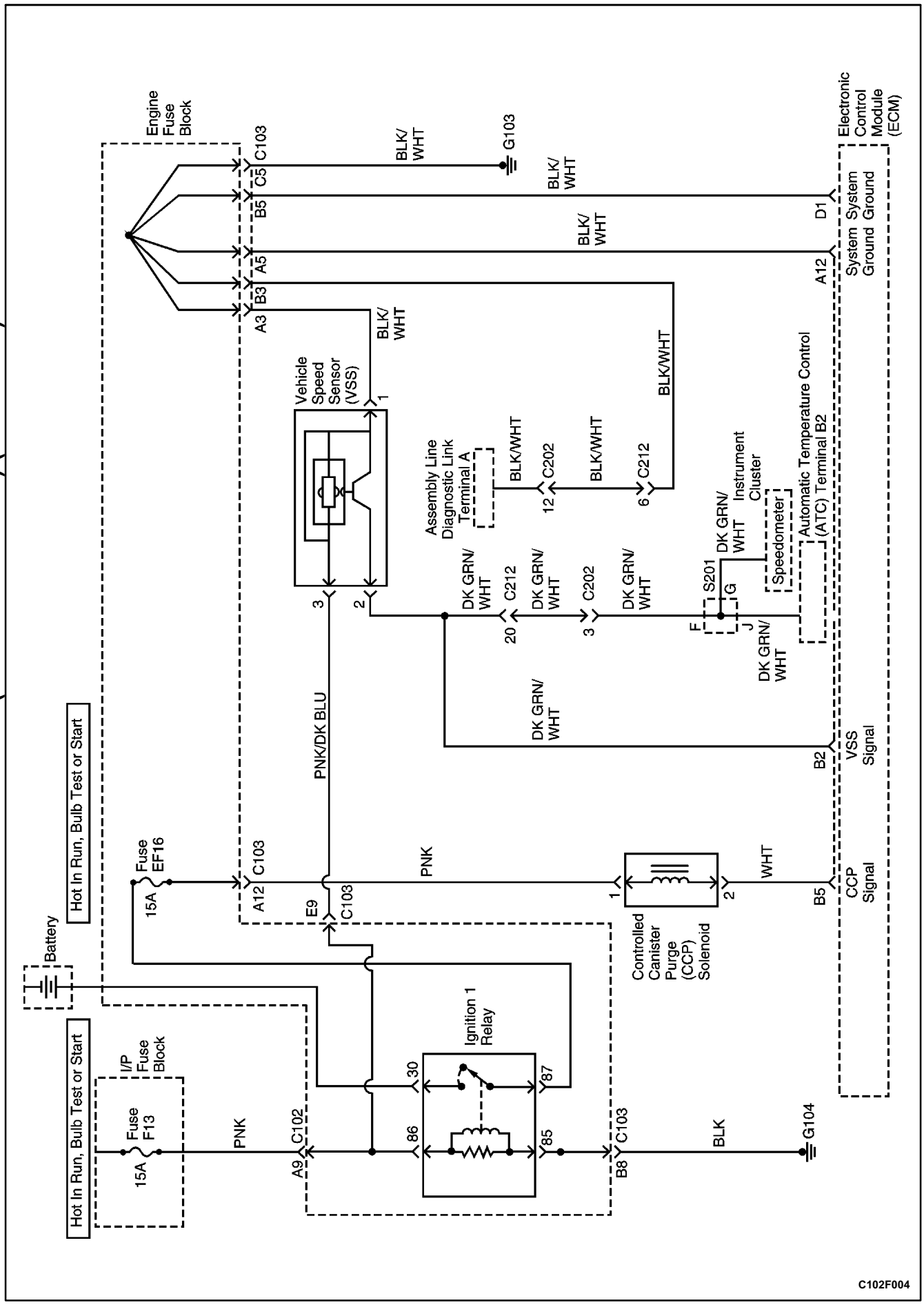

ECM WIRING DIAGRAM (2.0 SOHC - 5 OF 5) (IEFI6 ECM)

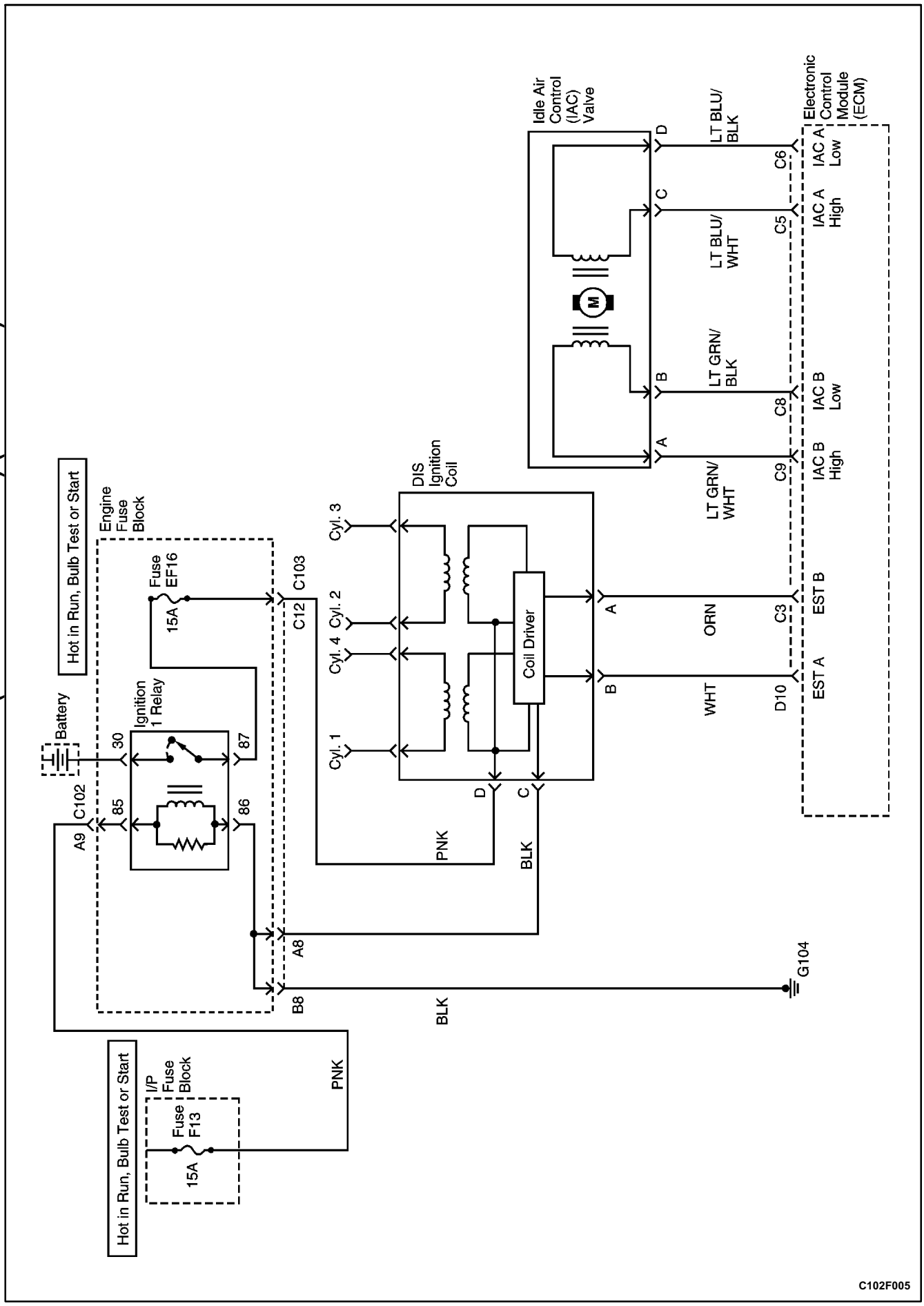

ECM WIRING DIAGRAM (2.0L DOHC - 1 OF 5) (ITMS6F ECM)

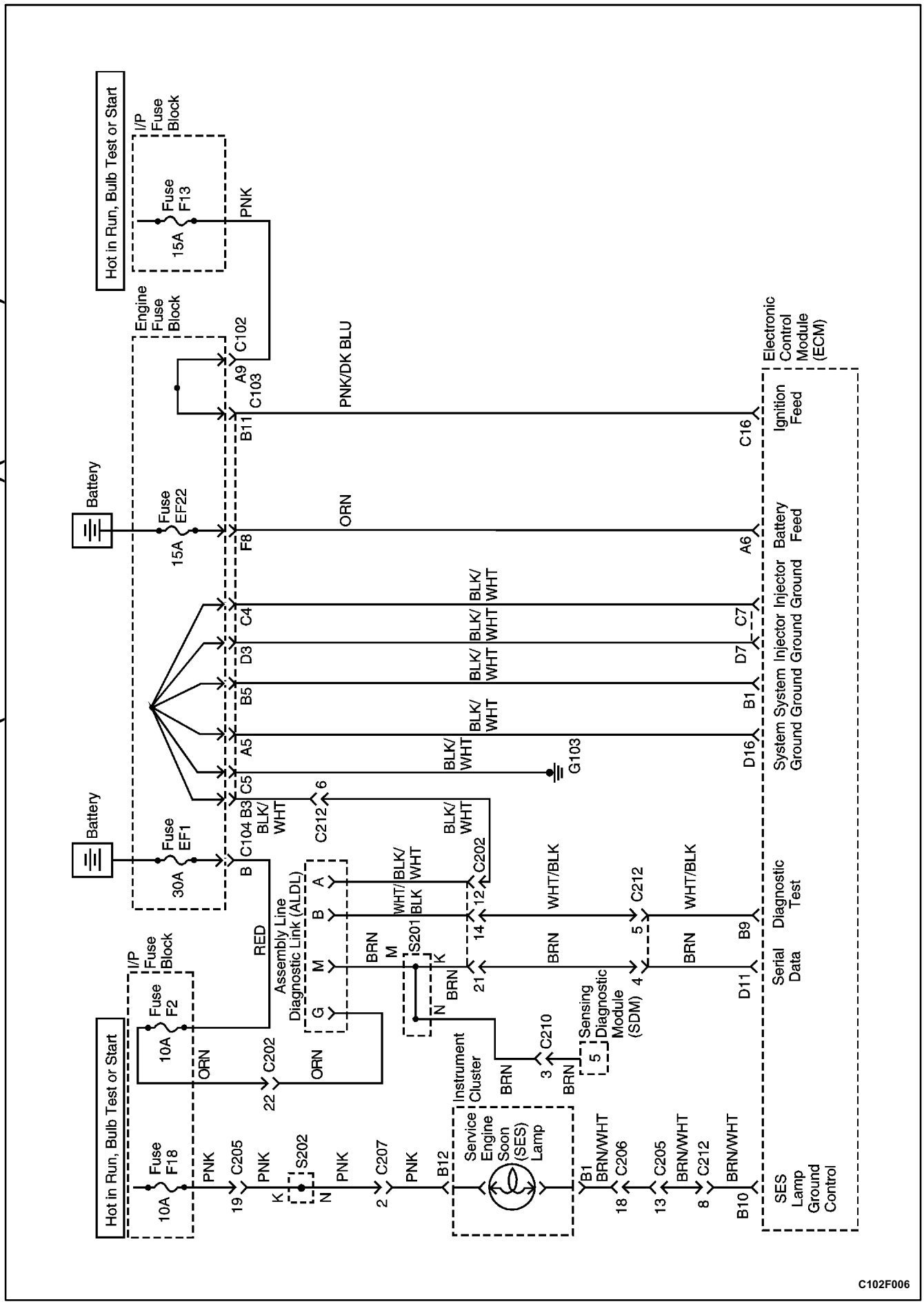

ECM WIRING DIAGRAM (2.0L DOHC - 2 OF 5) (ITMS6F ECM)

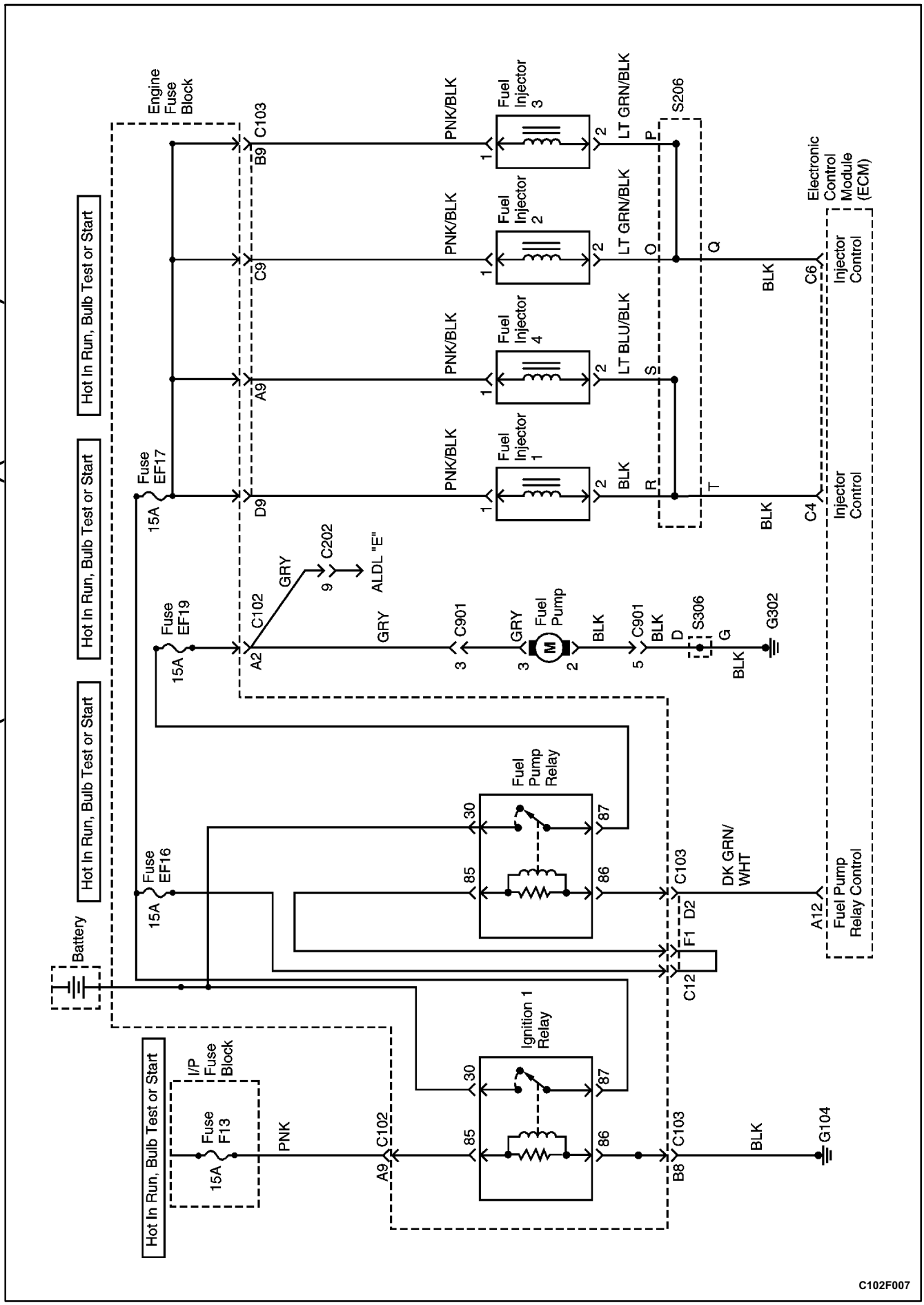

ECM WIRING DIAGRAM (2.0L DOHC - 3 OF 5) (ITMS6F ECM)

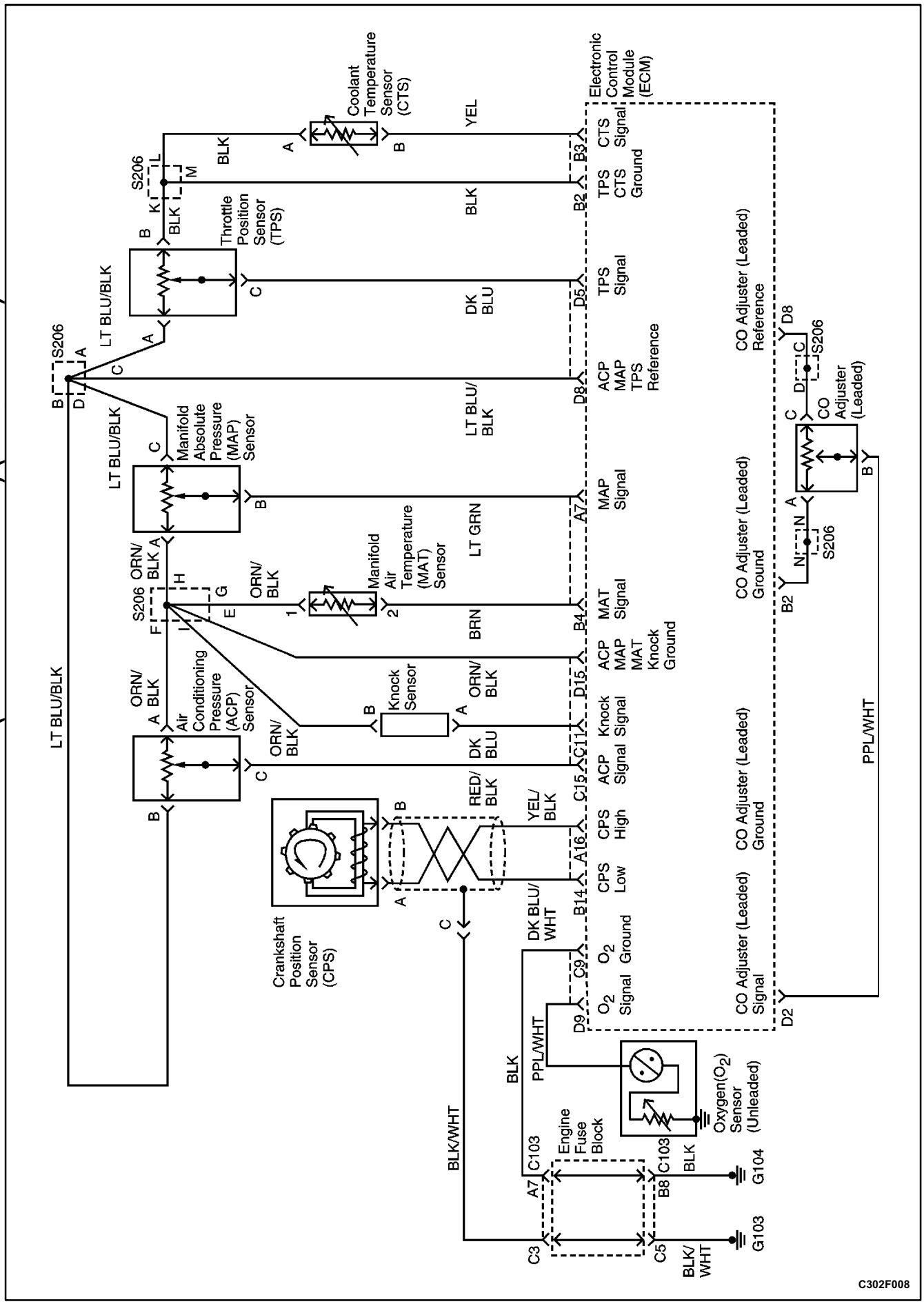

ECM WIRING DIAGRAM (2.0L DOHC - 4 OF 5) (ITMS6F ECM)

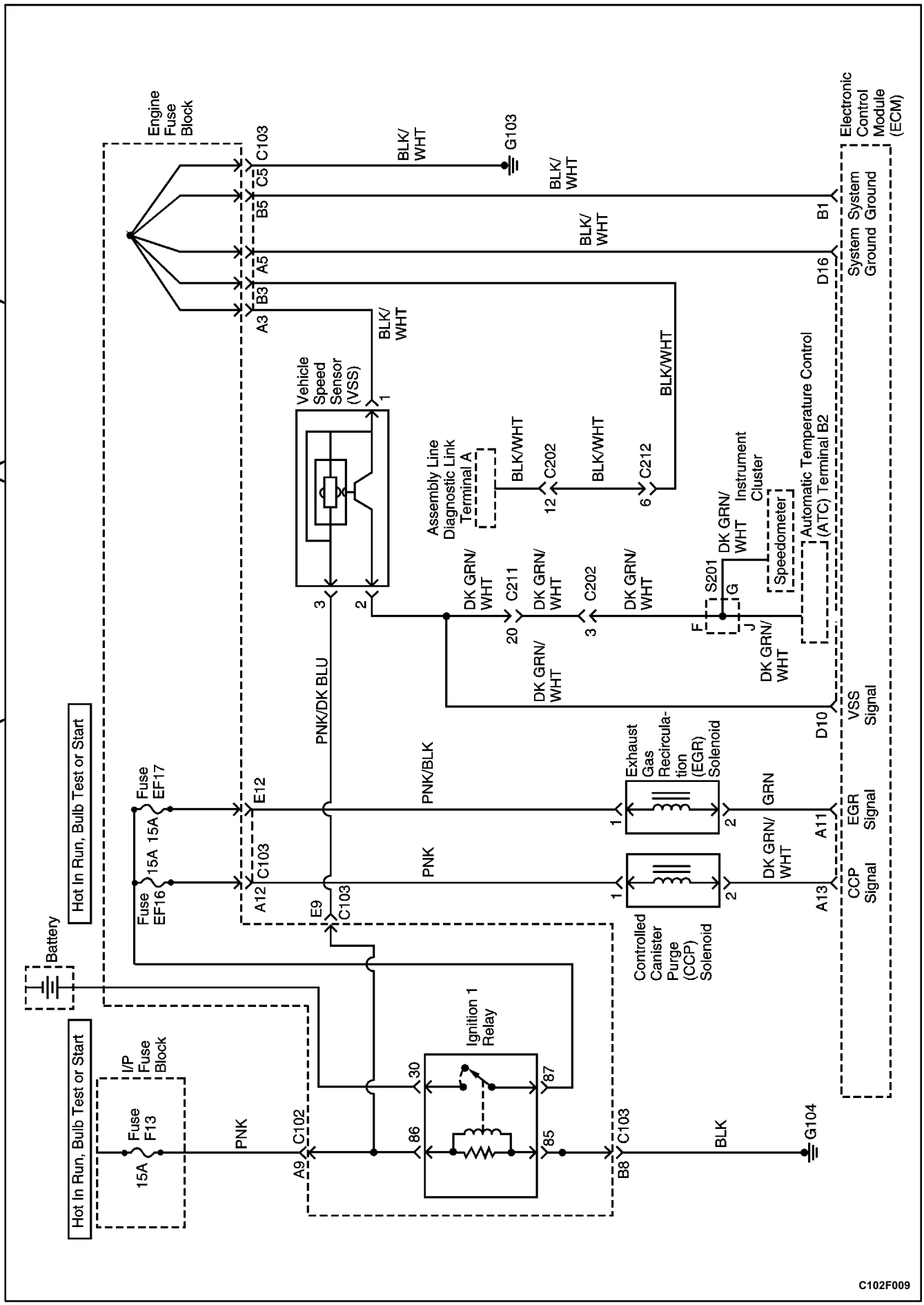

C102F009

ECM WIRING DIAGRAM (2.0L DOHC - 5 OF 5) (ITMS6F ECM)

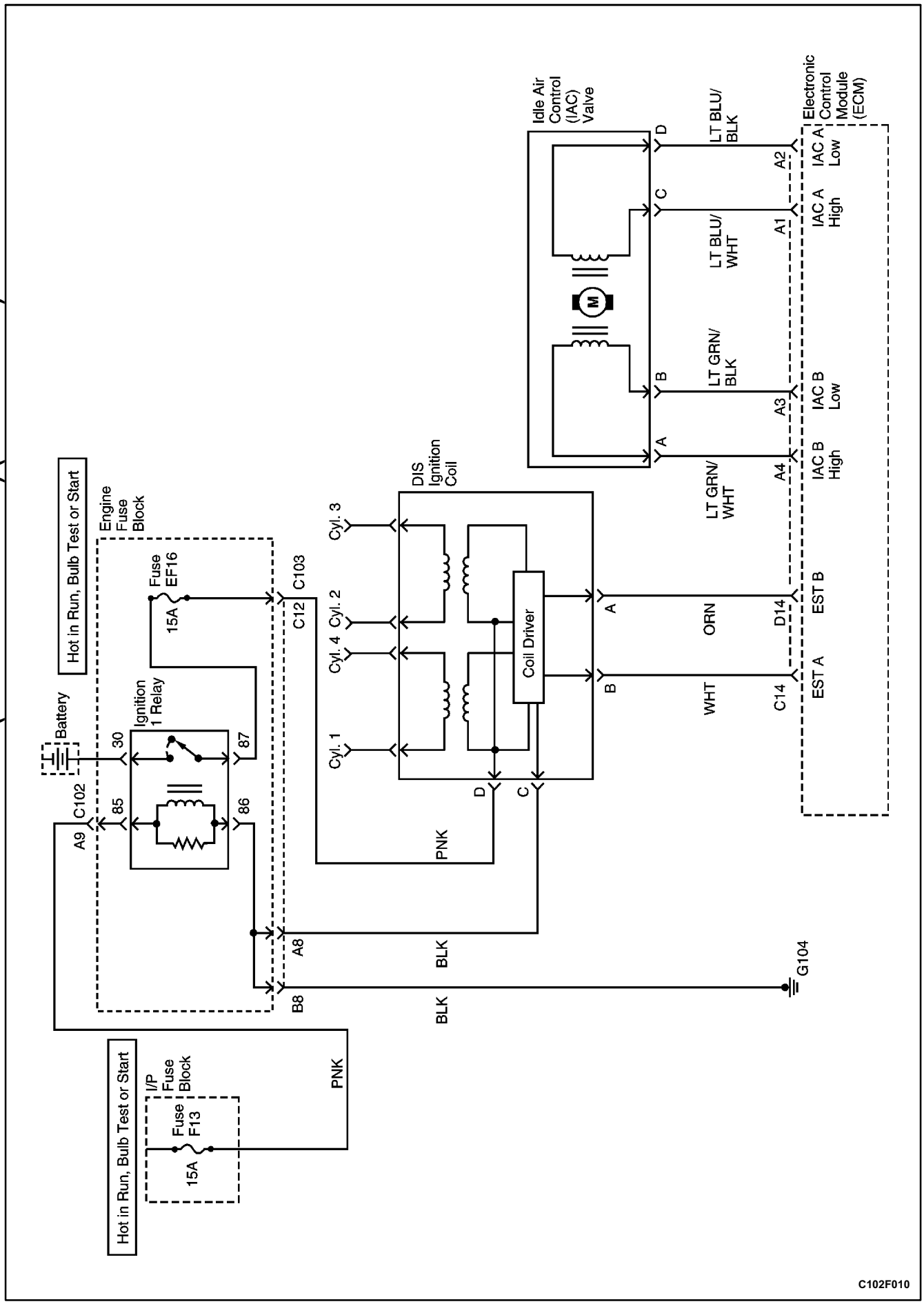

SCHEMATIC AND ROUTING DIAGRAMS (2.2L DOHC)

ECM WIRING DIAGRAM (2.2L DOHC - 1 OF 6) (ISFI6TD)

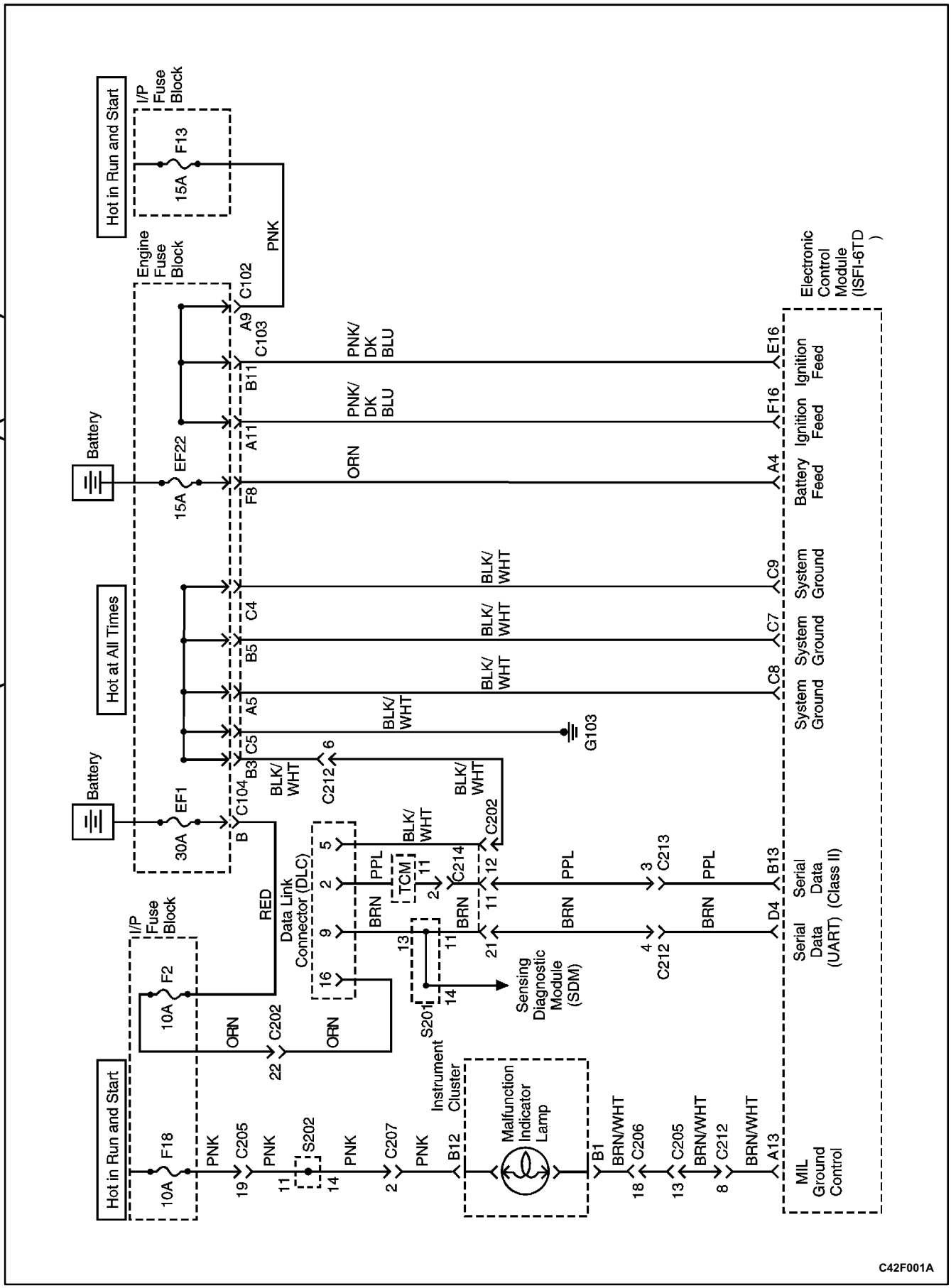

ECM WIRING DIAGRAM (2.2L DOHC - 2 OF 6) (ISFI6TD)

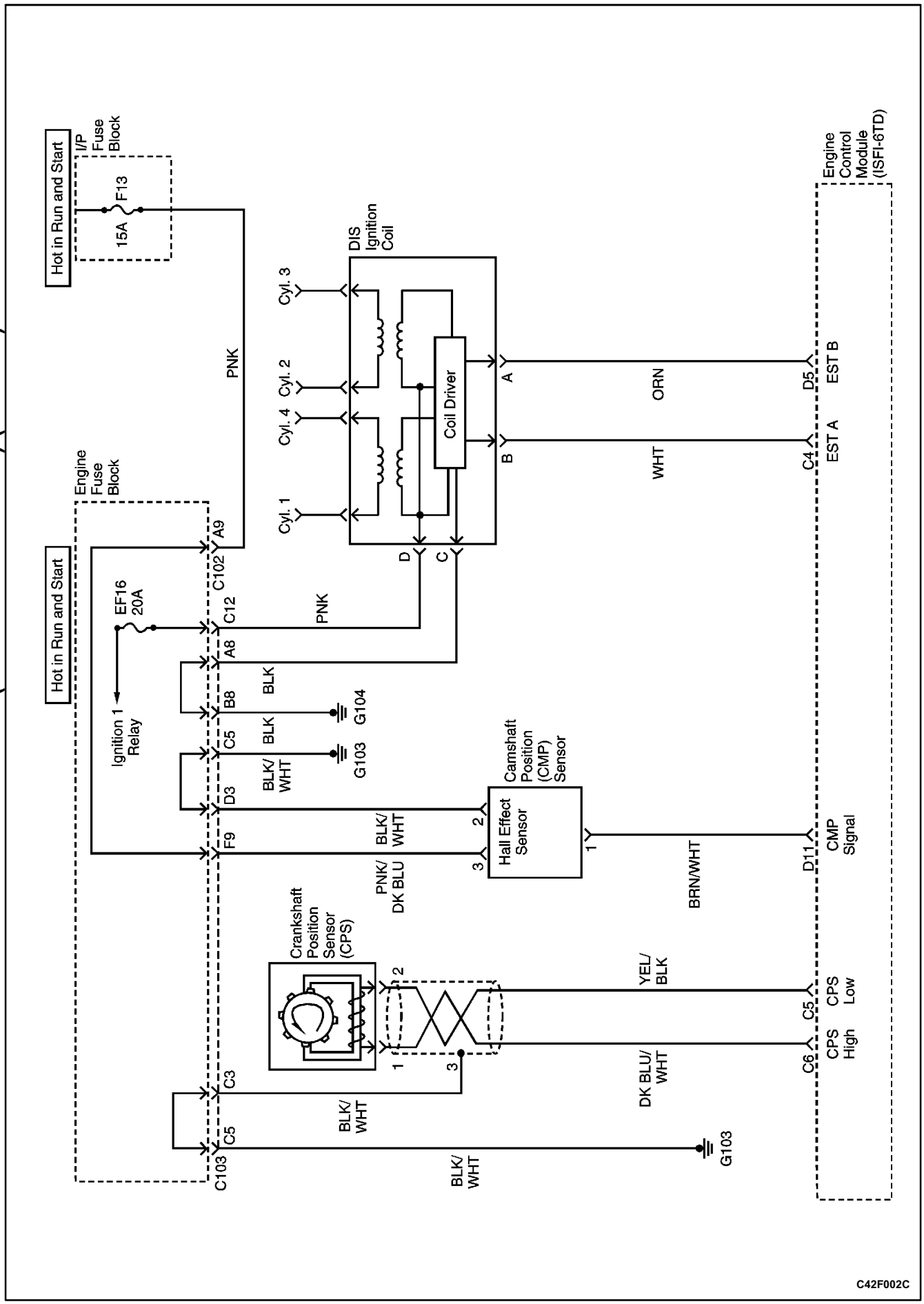

ECM WIRING DIAGRAM (2.2L DOHC - 3 OF 6) (ISFI6TD)

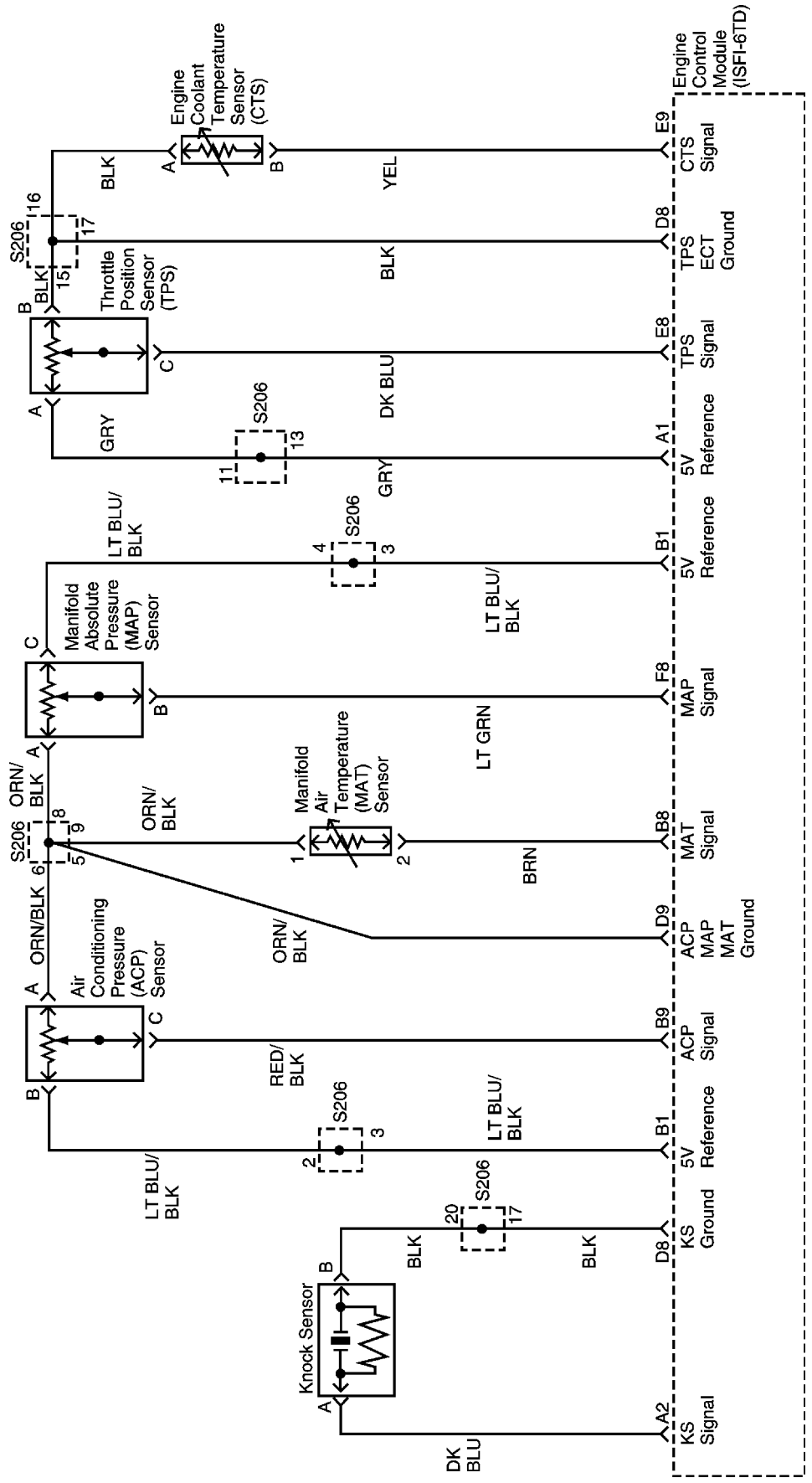

ECM WIRING DIAGRAM (2.2L DOHC - 4 OF 6) (ISFI6TD)

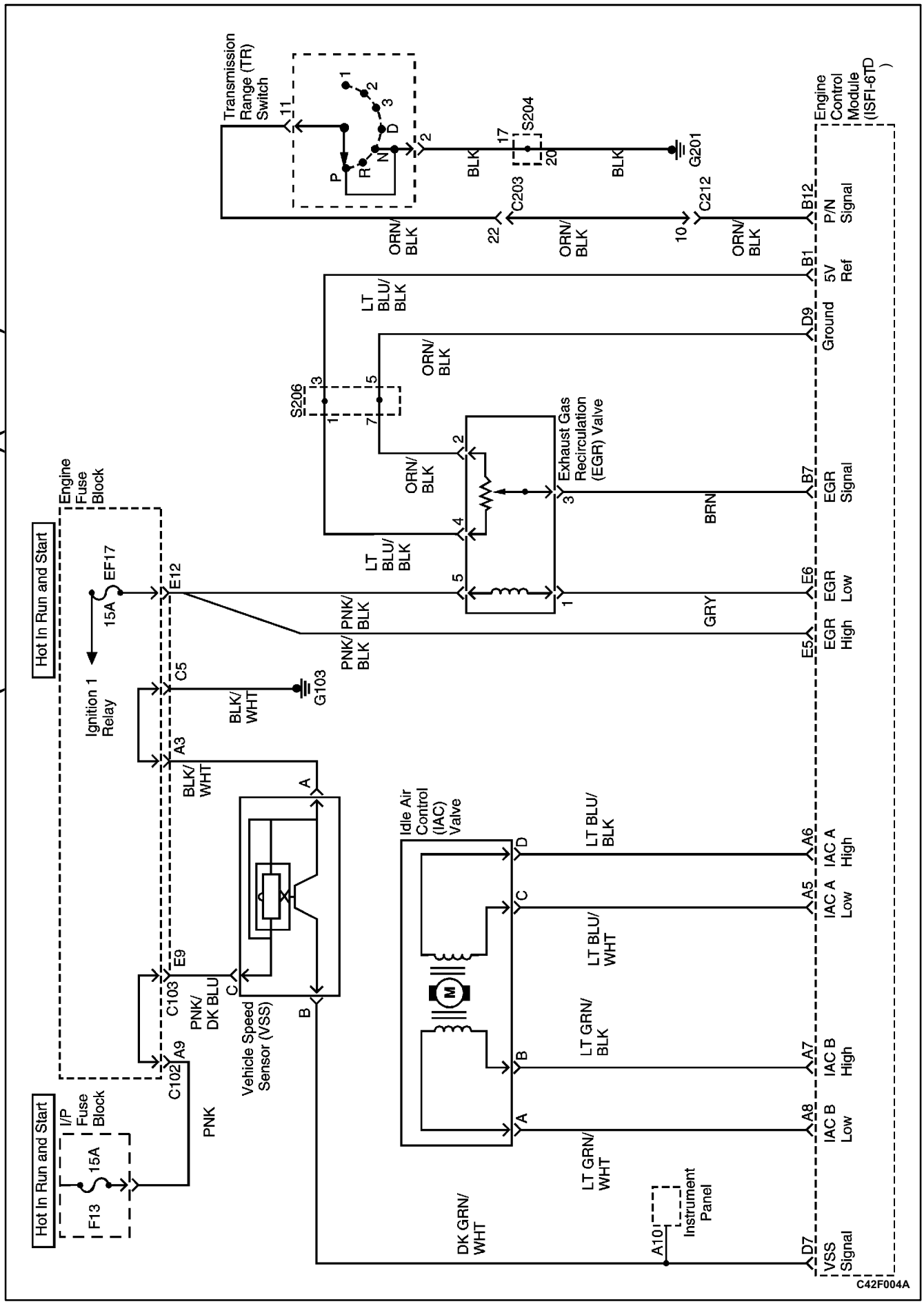

ECM WIRING DIAGRAM (2.2L DOHC - 5 OF 6) (ISFI6TD)

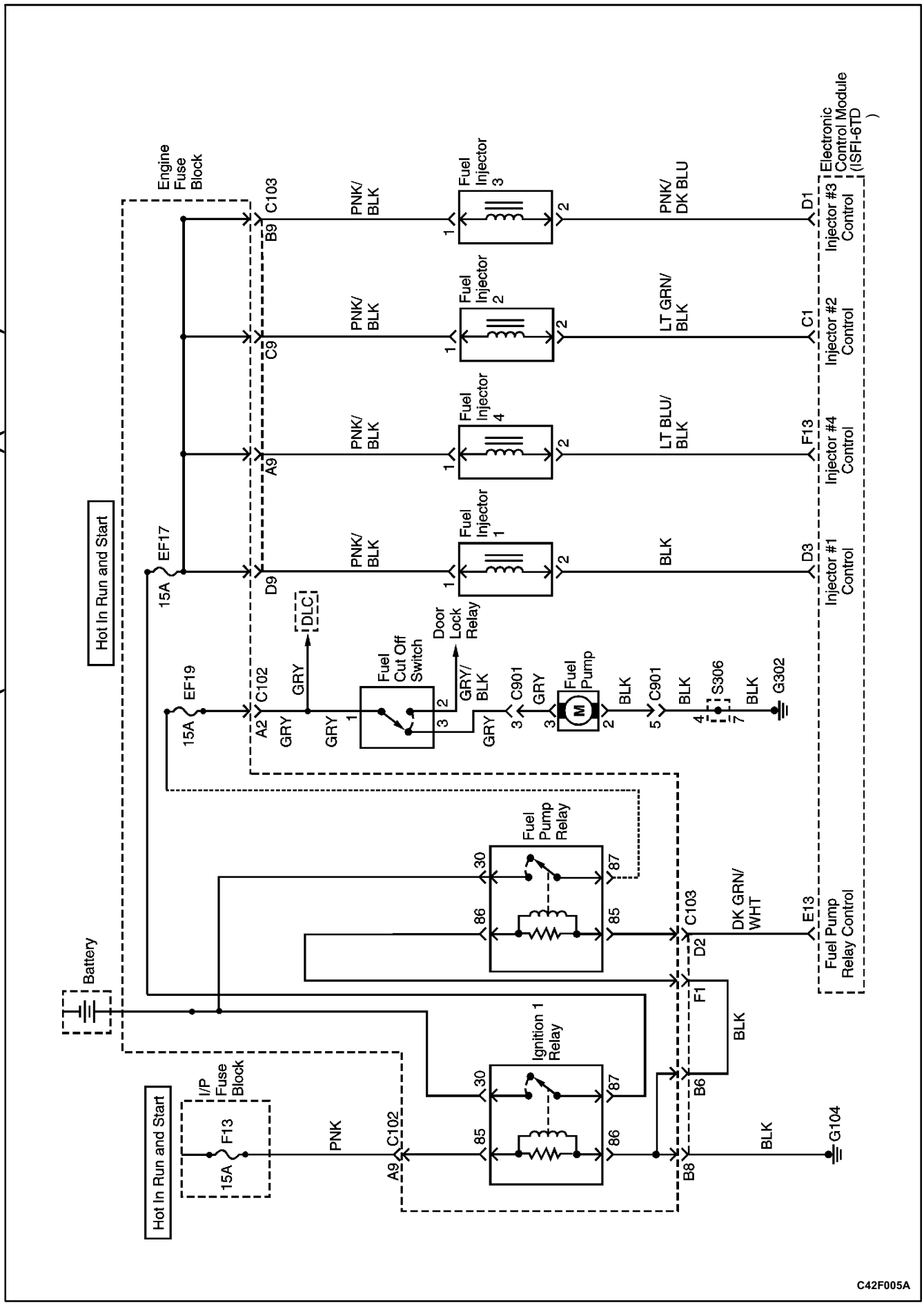

ECM WIRING DIAGRAM (2.2L DOHC - 6 OF 6) (ISFI6TD)

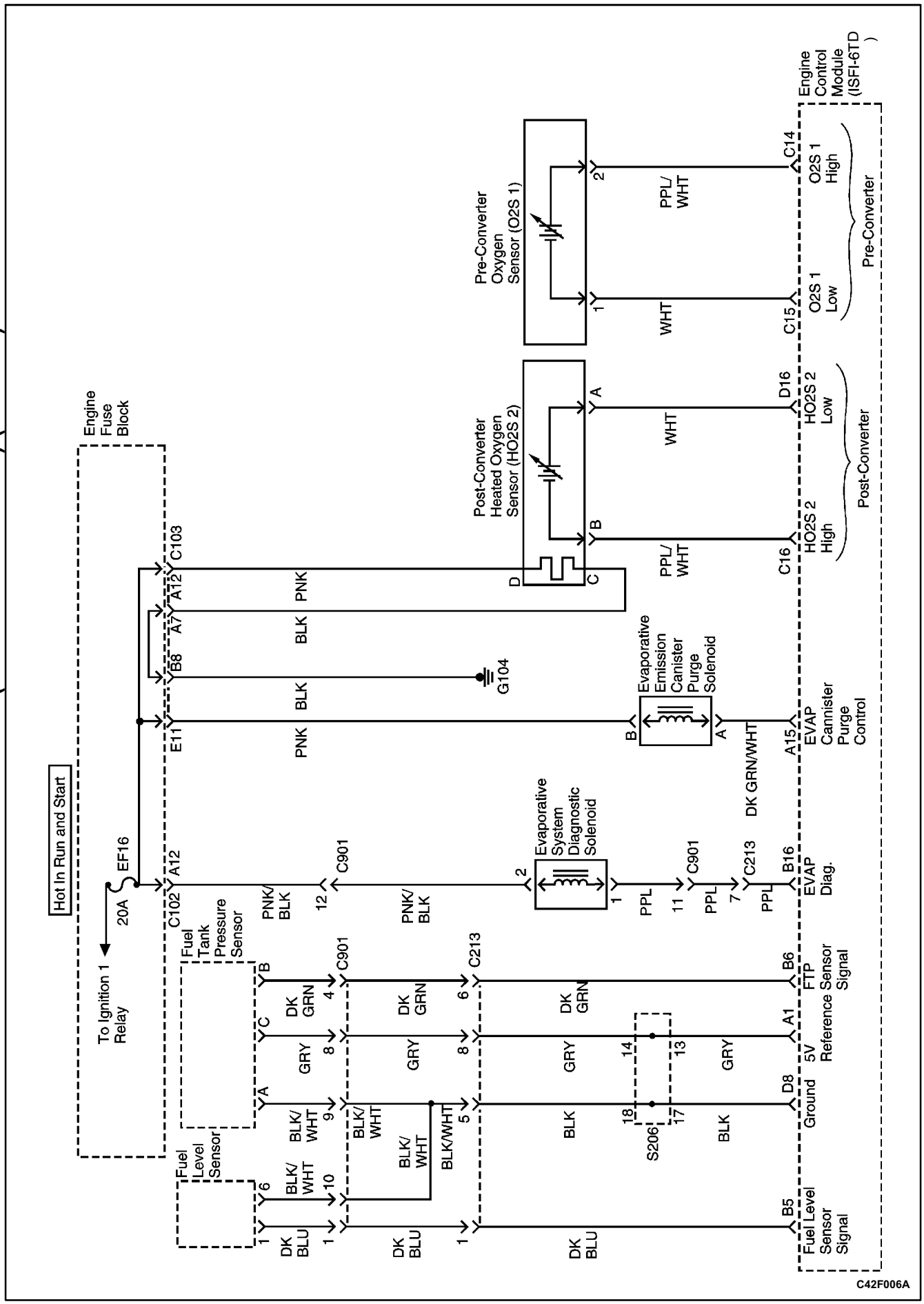

CONNECTOR END VIEW

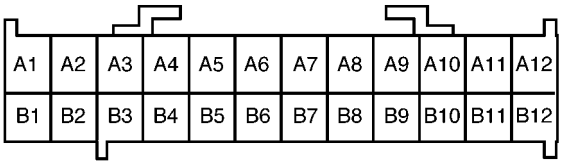

Electronic Control
Module (ECM) 24 Pin
Connector
(2.0L SOHC)

C302F086

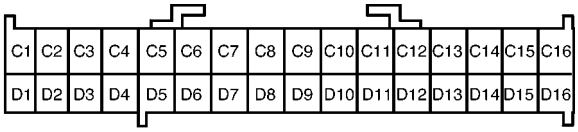

Electronic Control
Module (ECM) 32 Pin
Connector
(2.0L SOHC)

C302F085

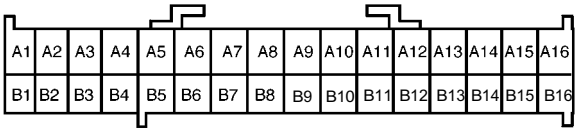

Electronic Control
Module (ECM) J2 (Red)
Connector
(2.0L DOHC)

C302F083

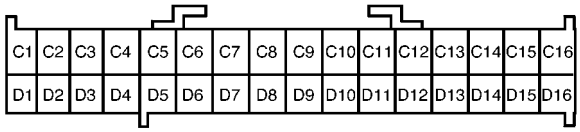

Electronic Control
Module (ECM) J1 (White)
Connector
(2.0 L DOHC)

C302F084

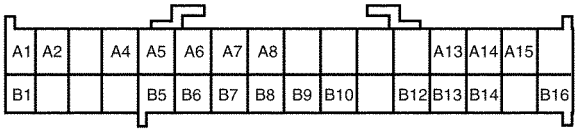

Engine Control
Module (ECM) J1 (Red)
Connector
(2.2L DOHC)

C402F008

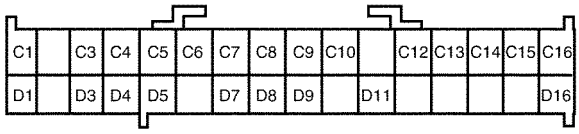

Engine Control
Module (ECM) J2 (White)
Connector
(2.2L DOHC)

C402F009

CONNECTOR END VIEW (Cont'd)

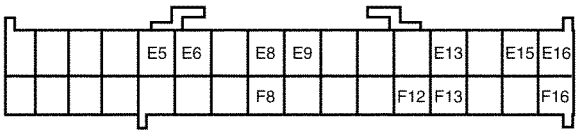

Engine Control
Module (ECM)
(Blue) Connector
(2.2L DOHC)

C402F010

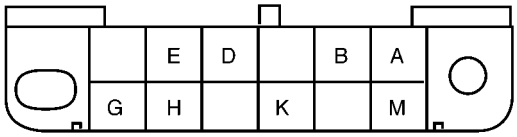

Assembly Line
Diagnostic Link
(ALDL)
(2.0L SOHC/DOHC)

C32F091A

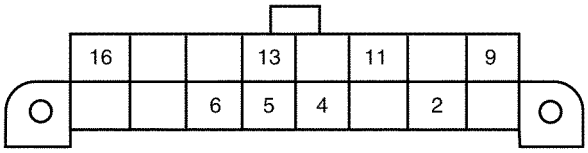

Data Link
Connector (DLC)
(2.2L DOHC)

A402F050

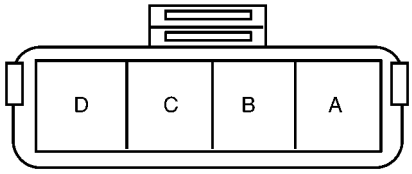

Direct Ignition System (DIS)
Ignition Coil
Connector

A102F080

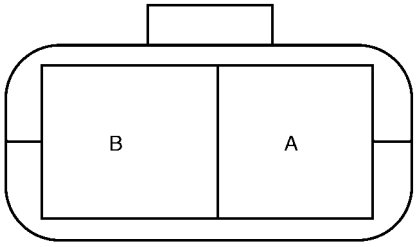

Coolant Temperature
Sensor (CTS) Connector

A102F085

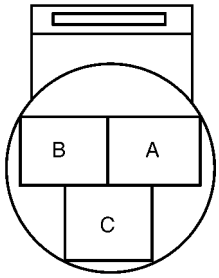

Air Conditioning
Pressure (ACP) Sensor
Connector

A102F088

CONNECTOR END VIEW (Cont'd)

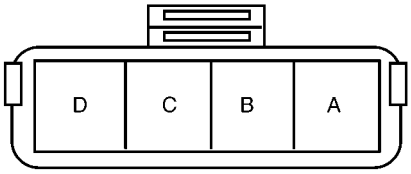

Idle Air Control (IAC) Valve Connector

A102F076

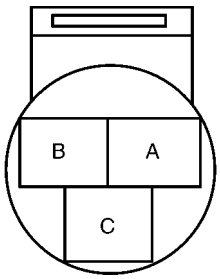

Throttle Position Sensor (TPS) Connector

A102F074

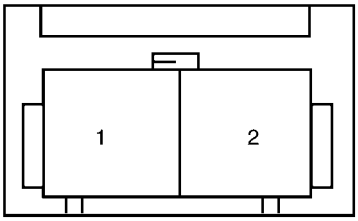

Manifold Air Temperature (MAT) Sensor Connector

A102F077

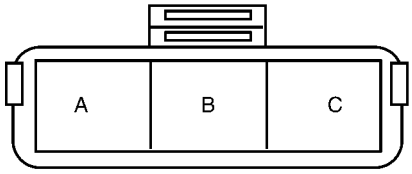

Vehicle Speed Sensor (VSS) (M/T) Connector

A102F086

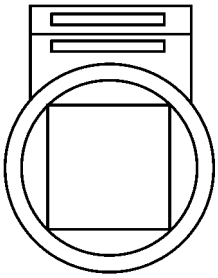

Oxygen (O2) Sensor Connector (2.0L SOHC/DOHC)

A102F081

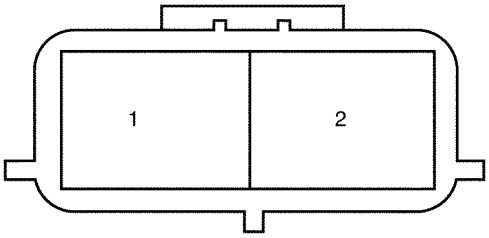

Evaporative Emission (EVAP) Canister Purge Solenoid Connector

C402F048

CONNECTOR END VIEW (Cont'd)

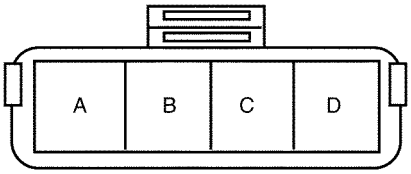

Post- Converter Heated
Oxygen Sensor (HO2S 2)
Connector

A402F022

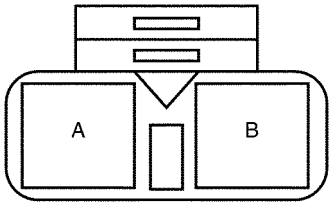

Evaporative System
Diagnostic Solenoid (ESDS)
Connector

A402F023

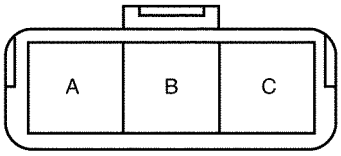

Fuel Tank Pressure
Sensor Connector

A402F025

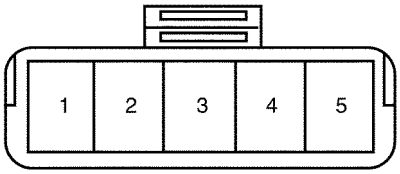

Exhaust Gas Recirculation
(EGR) Value
Connector

A402F027

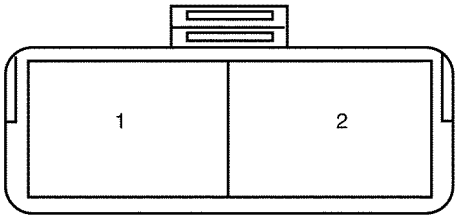

Pre-Converter Oxygen
Sensor (O2S 1)
Connector
(2.2L DOHC)

C402F012

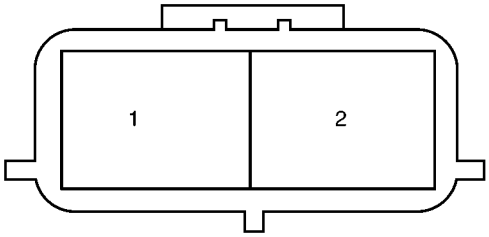

Controlled Canister
Purge (CCP) Solenoid
Connector

A102F078

CONNECTOR END VIEW (Cont'd)

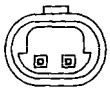

Knock Sensor Connector
(2.0L DOHC)

C302F092

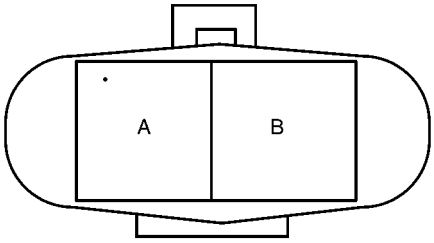

Cooling Fan
Connector

A102F089

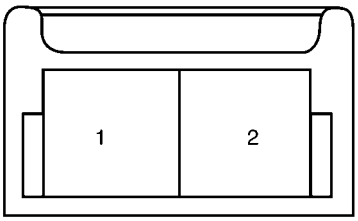

Fuel Injector
Connector
(2.0L SOHC)

C302F089

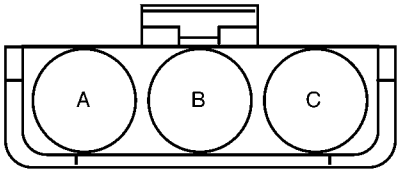

Manifold Absolute
Pressure (MAP) Sensor
Connector
(2.0L SOHC)

C302F087

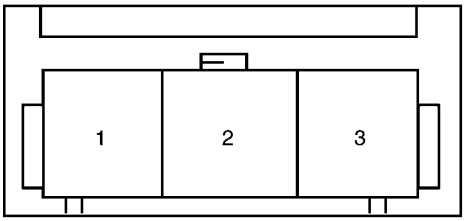

Crankshaft Position
Sensor (CPS)
Connector
(2.0L SOHC)

C302F088

CONNECTOR END VIEW (Cont'd)

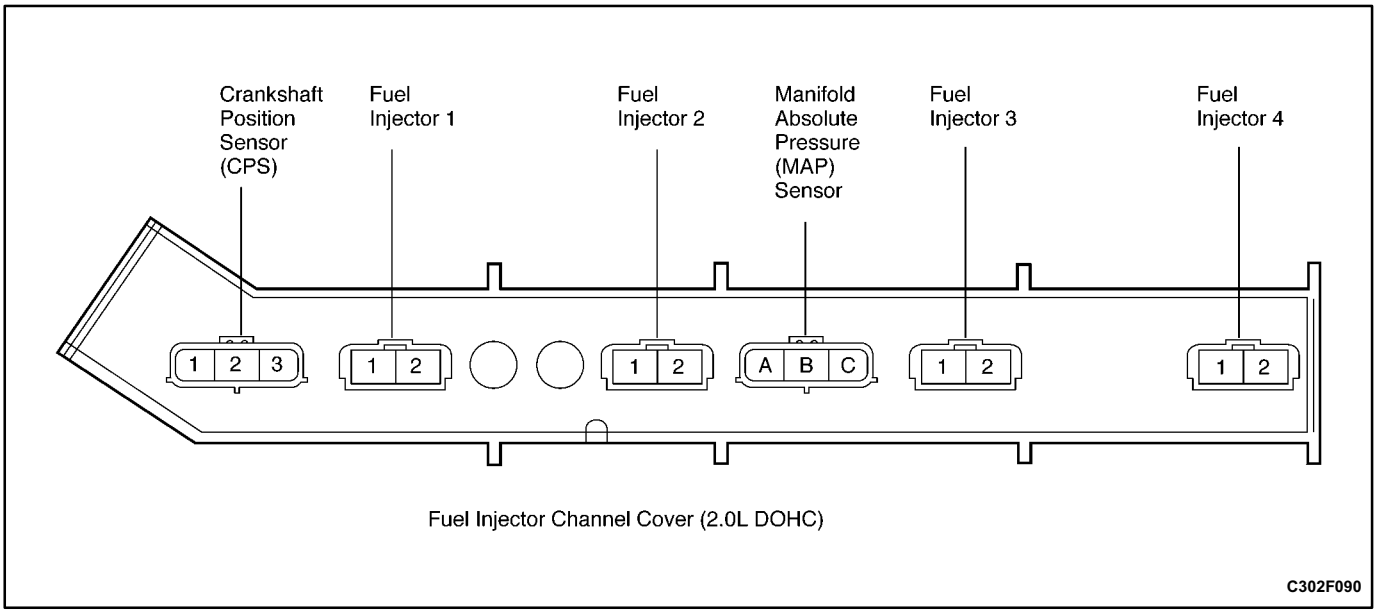

COMPONENT LOCATOR

COMPONENT LOCATOR (2.0L SOHC)
(Left-Hand Drive Shown, Right-Hand Drive Similar)

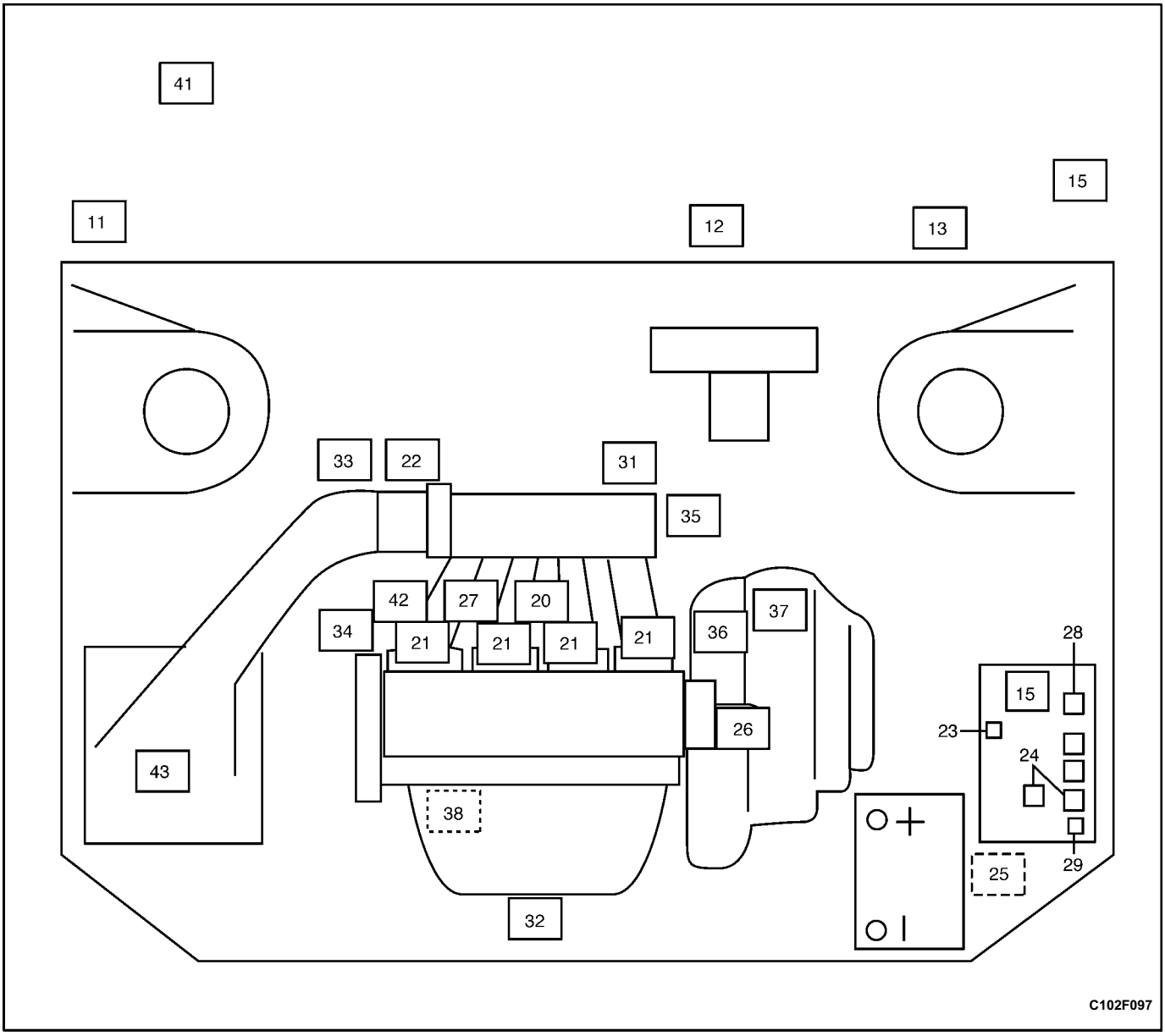

Components on ECM Harness
- 11 Electronic Control Module (ECM)
- 12 ALDL Diagnostic Connector
- 13 Malfunction Indicator Lamp (MIL)
- 15 Fuse Panel (2)

ECM Controlled Devices
- 20 Exhaust Gas Recirculation (EGR) Valve
- 21 Fuel Injector (4)
- 22 Idle Air Control (IAC) Valve
- 23 Fuel Pump Relay
- 24 Cooling Fan Relays
- 25 Series/Parallel Cooling Fan Relay
- 26 Direct Ignition System Ignition Coil
- 27 Controlled Canister Purge Solenoid
- 28 Ignition 1 Relay
- 29 A/C Compressor Relay

Information Sensors
- 31 Manifold Absolute Pressure (MAP) Sensor
- 32 Oxygen (O_2) Sensor
- 33 Throttle Position Sensor (TPS)
- 34 Coolant Temperature Sensor (CTS)
- 35 Manifold Air Temperature (MAT) Sensor
- 36 Vehicle Speed Sensor (VSS)
- 37 P/N Switch (Automatic Transaxle only)
- 38 Crankshaft Position Sensor (CPS)

Not ECM Connected
- 41 Evaporative Emission Canister (under vehicle, behind right rear wheel)
- 42 Oil Pressure Switch
- 43 Air Cleaner

COMPONENT LOCATOR (2.0L DOHC)

(Left-Hand Drive Shown, Right-Hand Drive Similar)

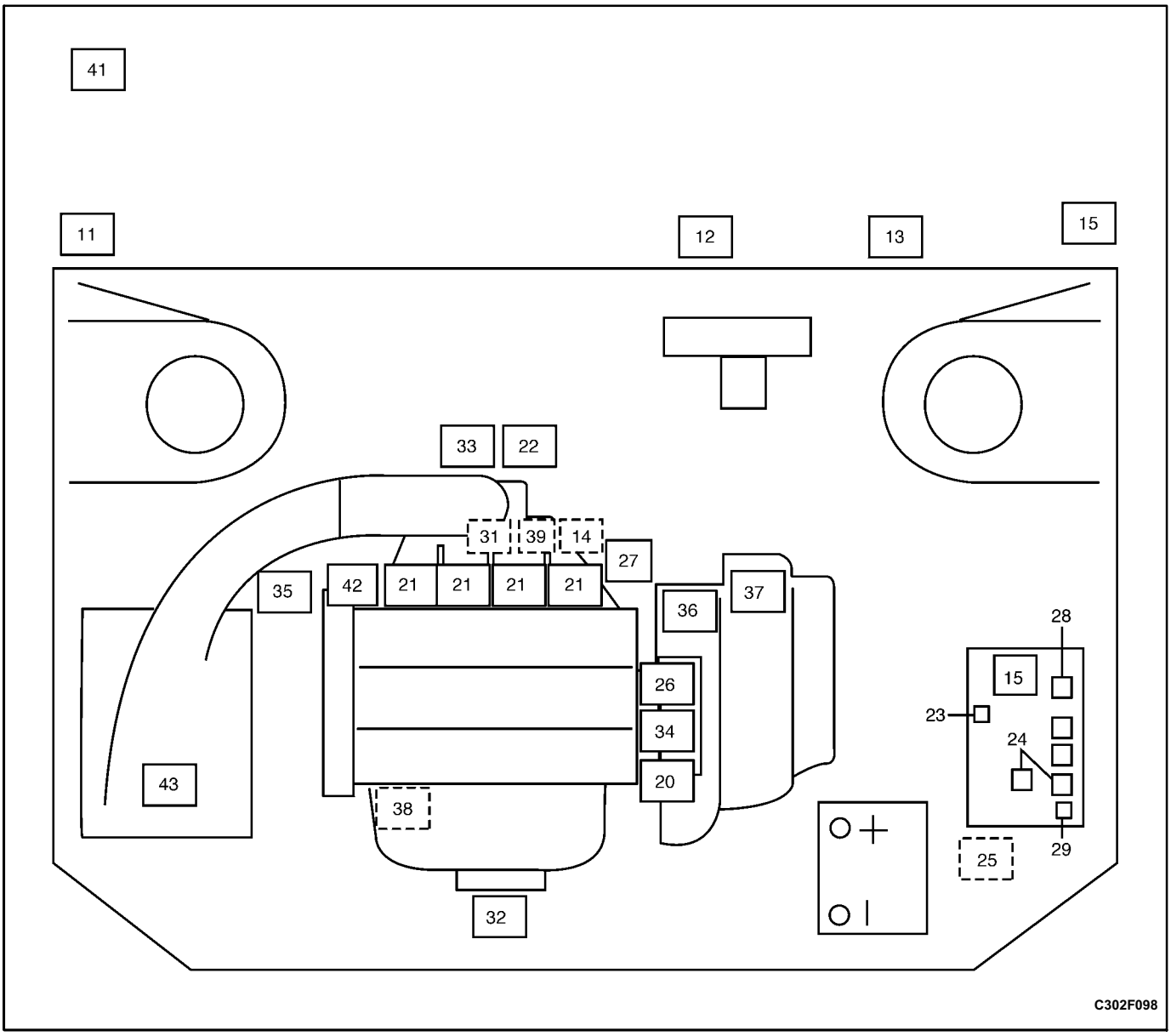

Components on ECM Harness
- 11 Electronic Control Module (ECM)
- 12 ALDL Diagnostic Connector
- 13 Malfunction Indicator Lamp (MIL)
- 14 ECM/ABS Harness Ground
- 15 Fuse Panel (2)

ECM Controlled Devices
- 20 Exhaust Gas Recirculation (EGR) Valve
- 21 Fuel Injector (4)
- 22 Idle Air Control (IAC) Valve
- 23 Fuel Pump Relay
- 24 Engine Fan Relays
- 25 Series/Parallel Cooling Fan Relay
- 26 Direct Ignition System Ignition Coil
- 27 Controlled Canister Purge Solenoid
- 28 Ignition 1 Relay
- 29 A/C Compressor Relay

Information Sensors
- 31 Manifold Absolute Pressure (MAP) Sensor
- 32 Oxygen (O_2) Sensor
- 33 Throttle Position Sensor (TPS)
- 34 Coolant Temperature Sensor (CTS)
- 35 Manifold Air Temperature (MAT) sensor
- 36 Vehicle Speed Sensor (VSS)
- 37 P/N Switch (Automatic Transaxle only)
- 38 Crankshaft Position Sensor (CPS)
- 39 Knock Sensor

Not ECM Connected
- 41 Evaporative Emission Canister (under vehicle, behind right rear wheel)
- 42 Oil Pressure Switch
- 43 Air Cleaner

COMPONENT LOCATOR (2.2L DOHC)

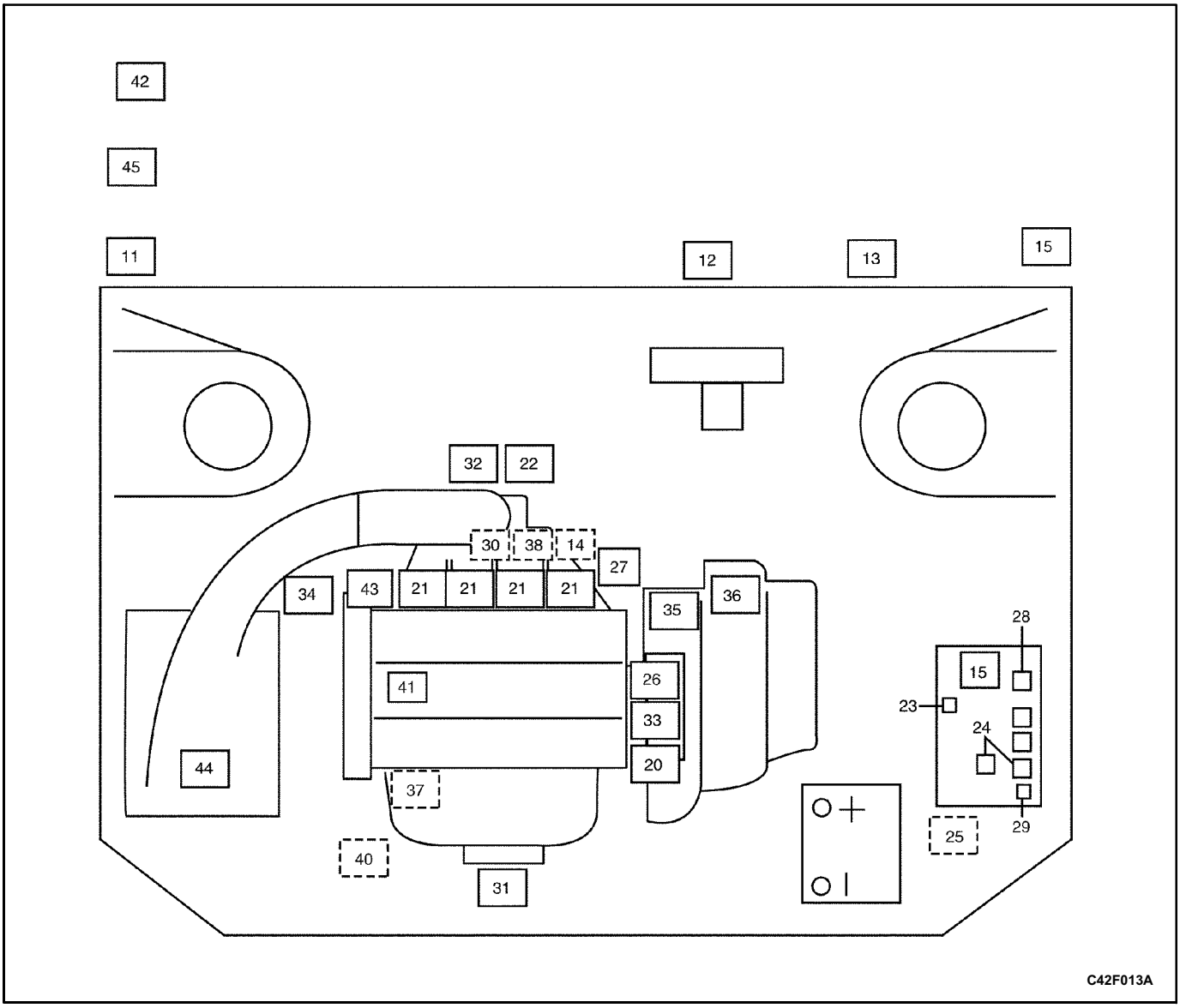

Components on ECM Harness

11 Engine Control Module (ECM)
12 Data Link Connector (DLC)
13 Malfunction Indicator Lamp (MIL)
14 ECM/ABS Harness Ground
15 Fuse Panel (2)

ECM Controlled Devices

20 Exhaust Gas Recirculation (EGR) Valve
21 Fuel Injector (4)
22 Idle Air Control (IAC) Valve
23 Fuel Pump Relay
24 Engine Fan Relays
25 Series/Parallel Cooling Fan Relay
26 Direct Ignition System Ignition Coil
27 Evaporative Emission Canister Purge Solenoid
28 Ignition 1 Relay
29 A/C Compressor Relay

Information Sensors

30 Manifold Absolute Pressure (MAP) Sensor
31 Pre-Converter (O2S 1) Oxygen Sensor
32 Throttle Position Sensor (TPS)
33 Engine Coolant Temperature Sensor (CTS)
34 Manifold Air Temperature Sensor (MAT)
35 Vehicle Speed Sensor (VSS)
36 P/N Position Switch (Automatic Transaxle only)
37 Crankshaft Position Sensor (CPS)
38 Knock Sensor
40 Post-Converter Oxygen (HO2S 2) Sensor
41 Camshaft Position (CMP) Sensor

Not ECM Connected

42 Evaporative Emission Canister (under vehicle, behind right rear wheel)
43 Oil Pressure Switch
44 Air Cleaner
45 Fuel Cutoff Switch

DIAGNOSIS (2.0L SOHC/DOHC)

TROUBLE CODE DIAGNOSIS

CLEARING TROUBLE CODES

Notice: To prevent electronic control module damage, the key must be OFF when disconnecting or recon-necting the power to the electronic control module (for example battery cable, electronic control module pigtail connector, electronic control module fuse, jumper cables, etc.).

When the electronic control module sets a diagnostic trouble code, the malfunction indicator lamp (MIL) will be turned on and a diagnostic trouble code will be stored in the electronic control module's memory. If the problem is intermittent, the light will go out after 10 seconds if the fault is no longer present. The diagnostic trouble code will stay in the electronic control module's memory until the battery voltage to the electronic control module is removed. Removing battery voltage for 10 seconds will clear all stored diagnostic trouble codes.

Diagnostic trouble codes should be cleared after repairs have been completed. Some diagnostic tables will tell you to clear the codes before using the chart. This al-lows the electronic control module to set the diagnostic trouble code while going through the chart, which will help to find the cause of the problem more quickly.

IDLE LEARN PROCEDURE

Whenever the battery cables, the electronic control module (ECM), or the ECM fuse is disconnected more than 10 seconds or replaced, the following idle learn procedure must be performed:

1. Turn the ignition ON for 5 seconds.
2. Turn the ignition OFF for 10 seconds.
3. Turn the ignition ON for 5 seconds.
4. Start the engine in park/neutral.
5. Allow the engine run until the engine coolant is above 85°C (185°F).
6. Turn the A/C ON for 10 seconds, if equipped.
7. Turn the A/C OFF for 10 seconds, if equipped.
8. If the vehicle is equipped with an automatic trans-axle, apply the parking brake. While depressing the brake pedal, place the transaxle in D (drive).
9. Turn the A/C ON for 10 seconds, if equipped.
10. Turn the A/C OFF for 10 seconds, if equipped.
11. Turn the ignition OFF. The idle learn procedure is complete.

DIAGNOSTIC SYSTEM CHECK (2.0L SOHC)

Circuit Description

The diagnostic system check is an organized approach to identifying a problem created by an electronic engine control system malfunction. It must be the starting point for any driveability complaint diagnosis because it di-rects the technician to the next logical step in diagnosing the complaint. Understanding the table and using it cor-rectly will reduce diagnostic time and prevent the un-necessary replacement of parts.

Test Description

The number(s) below refer to step(s) on the diagnostic table.

1. Check for proper operation of the malfunction indica-tor lamp (MIL). When the ignition is ON and the en-gine is OFF, the MIL should come on and remain on steadily.
2. No MIL at this point indicates that there is a problem with the MIL circuit or the electronic control module (ECM) control of that circuit.
3. This step checks the ability of the ECM to control the MIL. With the assembly line diagnostic link (ALDL) terminal grounded, the MIL should flash a Code 12 three times, followed by any diagnostic trouble code stored in memory. Depending upon the type of ECM, an ECM error may result in the inability to flash Code 12.
4. Most procedures use a scan tool to aid diagnosis; therefore, serial data must be available. If an ECM error is present, the ECM may be able to illuminate the MIL, but not enable serial data.
5. Although the ECM is powered up, an "Engine Cranks But Will Not Start" symptom could exist because of an ECM or system problem.
6. This step will isolate if the customer complaint is an MIL or a driveability problem with no MIL. Refer to the diagnostic trouble code (DTC) in this section for a list of valid DTCs. An invalid DTC may be the result of a faulty scan tool or a faulty ECM.
7. Comparison of actual control system data with the typical values is a quick check to determine if any parameter is not within limits. Keep in mind that a ba-sic engine problem (such as incorrect valve timing or a vacuum leak) may substantially alter sensor values.

8. Installation of a scan tool will provide a good ground path for the ECM and may hide a driveability com-plaint due to poor ECM grounds.
9. If the actual data is not within the typical values es-tablished, refer to the tables in Symptom Diagnosis" to provide a functional check of the suspect compo-nent or system.

Diagnostic System Check (2.0L SOHC)

Step	Action	Value(s)	Yes	No
1	Verify the customer complaint(s). Are the customer's complaint(s) verified?	-	Go to *Step 2*	-
2	Turn the ignition ON. Is the malfunction indicator lamp (MIL) on steadily?	-	Go to *Step 4*	Go to *Step 3*
3	Jumper the assembly line diagnostic link (ALDL) terminals A and B. Does the MIL flash Code 12?	-	Go to *Step 4*	Go to Will Not Flash MIL"
4	1. Connect the scan tool to the ALDL. 2. Turn the ignition ON. Does the scan tool display serial data?	-	Go to *Step 5*	Go to *Step 12*
5	Start the engine. Does the engine start?	-	Go to *Step 6*	Go to Engine Cranks But Will Not Start
6	1. Turn the ignition OFF. 2. Connect the scan tool to the ALDL. 3. Turn the ignition ON. Are any diagnostic trouble codes (DTCs) displayed?	-	Go to *Step 8*	Go to *Step 7*
7	1. Start the engine. 2. Compare the scan tool data with typical values. Are the values normal or within the normal range?	-	Go to *Step 9*	Go to *Step 10*
8	Refer to the applicable DTC table. Start with the DTC with the lowest numerical value and move up. Are the DTC(s) identified as valid trouble code(s)?	-	Go to the applicable DTC table	Go to *Step 6*
9	Are there any symptoms that have been identified?	-	Go to the applicable symptom table	Go to *Step 11*
10	Identify the component that has a serial data value outside the normal range. Has the component been identified?	-	Go to Diagnostic Aids"	-
11	1. Clear any DTC(s) from the ECM memory. 2. Verify that the DTC(s) have been cleared. 3. Road test the vehicle. 4. Recheck for the presence of any DTC(s). Is the repair complete?	-	System OK	Go to *Step 1*
12	1. Attach the scan tool to another vehicle. 2. Turn the ignition ON. Does the scan tool read serial data?	-	Go to *Step 13*	Go to *Step 16*
13	Check for an open or short in the wire between ECM terminal B7 and ALDL connector M. Is the problem found?	-	Go to *Step 14*	Go to *Step 15*

Diagnostic System Check (2.0L SOHC) (Cont'd)

Step	Action	Value(s)	Yes	No
14	1. Repair the open or short as necessary. 2. Connect the scan tool to the ALDL. 3. Start the engine. Does the scan tool display serial data?	-	System OK	Go to *Step 15*
15	1. Replace the electronic control module. 2. Connect the scan tool to the ALDL. 3. Start the engine. Does the scan tool display serial data?	-	Go to *Step 6*	-
16	1. Replace the scan tool. 2. Connect the scan tool to the ALDL. 3. Ignition ON. Does the scan tool read serial data?	-	Go to *Step 5*	-

DIAGNOSTIC SYSTEM CHECK (2.0L DOHC)

Circuit Description

The diagnostic system check is an organized approach to identifying a problem created by an electronic engine control system malfunction. It must be the starting point for any driveability complaint diagnosis because it directs the technician to the next logical step in diagnosing the complaint. Understanding the table and using it correctly will reduce diagnostic time and prevent the unnecessary replacement of parts.

Test Description

The number(s) below refer to step(s) on the diagnostic table.

1. Check for proper operation of the malfunction indicator lamp (MIL). When the ignition is ON and the engine is OFF, the MIL should come on and remain on steadily.
2. No MIL at this point indicates that there is a problem with the MIL circuit or the electronic control module (ECM) control of that circuit.
3. This step checks the ability of the ECM to control the MIL lamp. With the assembly line diagnostic link (ALDL) terminal grounded, the MIL should flash a Code 12 three times, followed by any diagnostic trouble code stored in memory. Depending upon the type of ECM, an ECM error may result in the inability to flash Code 12.
4. Most procedures use a scan tool to aid diagnosis; therefore, serial data must be available. If an ECM error is present, the ECM may be able to illuminate the MIL, but not enable serial data.
5. Although the ECM is powered up, an "Engine Cranks But Will Not Start" symptom could exist because of an ECM or system problem.
6. This step will isolate if the customer complaint is an MIL or a driveability problem with no MIL. Refer to the diagnostic trouble code (DTC) in this section for a list of valid DTCs. An invalid DTC may be the result of a faulty scan tool or a faulty ECM.
7. Comparison of actual control system data with the typical values is a quick check to determine if any parameter is not within limits. Keep in mind that a basic engine problem (such as incorrect valve timing or a vacuum leak) may substantially alter sensor values.
8. Installation of a scan tool will provide a good ground path for the ECM and may hide a driveability complaint due to poor ECM grounds.
9. If the actual data is not within the typical values established, refer to the tables in "Symptom Diagnosis" to provide a functional check of the suspect component or system.

Diagnostic System Check (2.0L DOHC)

Step	Action	Value(s)	Yes	No
1	Verify the customer complaint(s). Are the customer's complaint(s) verified?	-	Go to *Step 2*	-
2	Turn the ignition ON. Is the malfunction indicator lamp (MIL) on steadily?	-	Go to *Step 4*	Go to *Step 3*
3	Jumper the assembly line diagnostic link (ALDL) terminals A and B. Does the MIL flash Code 12?	-	Go to *Step 4*	Go to "Will Not Flash MIL"
4	1. Connect the scan tool to the ALDL. 2. Turn the ignition ON. Does the scan tool display serial data?	-	Go to *Step 5*	Go to *Step 12*
5	Start the engine. Does the engine start?	-	Go to *Step 6*	Go to "Engine Cranks But Will Not Start"
6	1. Turn the ignition OFF. 2. Connect the scan tool to the ALDL. 3. Turn the ignition ON. Are any diagnostic trouble codes (DTCs) displayed?	-	Go to *Step 8*	Go to *Step 7*
7	1. Start the engine. 2. Compare the scan tool data with typical values. Are the values normal or within the normal range?	-	Go to *Step 9*	Go to *Step 10*
8	Refer to the applicable DTC table. Start with the DTC with the lowest numerical value and move up. Are the DTC(s) identified as valid trouble code(s)?	-	Go to the applicable DTC table	Go to *Step 6*
9	Are there any symptoms that have been identified?	-	Go to the applicable symptom table	Go to *Step 11*
10	Identify the component that has a serial data value outside the normal range. Has the component been identified?	-	Go to "Diagnostic Aids"	-
11	1. Clear any DTC(s) from the ECM memory. 2. Verify that the DTC(s) have been cleared. 3. Road test the vehicle. 4. Recheck for the presence of any DTC(s). Is the repair complete?	-	System OK	Go to *Step 1*
12	1. Attach the scan tool to another vehicle. 2. Turn the ignition ON. Does the scan tool read serial data?	-	Go to *Step 13*	Go to *Step 16*
13	Check for an open or short in the wire between ECM terminal D11 and ALDL connector M. Is the problem found?	-	Go to *Step 14*	Go to *Step 15*
14	1. Repair the open or short as necessary. 2. Connect the scan tool to the ALDL. 3. Start the engine. Does the scan tool display serial data?	-	System OK	Go to *Step 15*

Diagnostic System Check (2.0L DOHC) (Cont'd)

Step	Action	Value(s)	Yes	No
15	1. Replace the electronic control module. 2. Connect the scan tool to the ALDL. 3. Start the engine. Does the scan tool display serial data?	-	Go to *Step 6*	-
16	1. Replace the scan tool. 2. Connect the scan tool to the ALDL. 3. Ignition ON. Does the scan tool read serial data?	-	Go to *Step 5*	-

DIAGNOSTIC AIDS

If an intermittent problem is evident, follow the guidelines below.

Preliminary Checks

Before using this section you should have already performed the "Diagnostic System Check."

Perform a thorough visual inspection. This inspection can often lead to correcting a problem without further checks and can save valuable time. Inspect for the following conditions:

- Electronic control module (ECM) grounds for being clean, tight, and in their proper location.
- Vacuum hoses for splits, kinks, collapsing and proper connections as shown on the Vehicle Emission Control Information label. Inspect thoroughly for any type of leak or restriction.
- Air leaks at the throttle body mounting area and the intake manifold sealing surfaces.
- Ignition wires for cracks, hardness, proper routing, and carbon tracking.
- Wiring for proper connections.
- Wiring for pinches or cuts.

Diagnostic Trouble Code Tables

Do not use the diagnostic trouble code (DTC) tables to try and correct an intermittent fault. The fault must be present to locate the problem.

Incorrect use of the DTC tables may result in the unnecessary replacement of parts.

Faulty Electrical Connections or Wiring

Most intermittent problems are caused by faulty electrical connections or wiring. Perform a careful inspection of suspect circuits for the following:

- Poor mating of the connector halves.
- Terminals not fully seated in the connector body.
- Improperly formed or damaged terminals. All connector terminals in a problem circuit should be carefully inspected, reformed, or replaced to insure contact tension.
- Poor terminal-to-wire connection. This requires removing the terminal from the connector body.

Road Test

If a visual inspection does not find the cause of the problem, the vehicle can be driven with a voltmeter or a scan tool connected to a suspected circuit. An abnormal voltage or scan tool reading will indicate that the problem is in that circuit.

If there are no wiring or connector problems found and a diagnostic trouble code (DTC) was stored for a circuit having a sensor, except for DTC 44 and DTC 45, replace the sensor.

Intermittent Malfunction Indicator Lamp (MIL)

An intermittent malfunction indicator lamp (MIL) with no diagnostic trouble code (DTC) present may be caused by the following:

- Electrical system interference caused by a defective relay, electronic control module (ECM) driven solenoid, or switch.
- Improper installation of electrical options such as lights, two-way radios, sound systems, or security systems.
- Ignition control wires should be routed away from ignition wires, ignition system components, and the generator.
- Ignition secondary wires shorted to ground.
- MIL driver wire or diagnostic test terminal intermittently shorted to ground.
- Intermittent loss of ECM ground connections.

Fuel System

Some intermittent driveability problems can be attributed to poor fuel quality. If a vehicle is occasionally running rough, stalling, or otherwise performing badly, ask the customer about the following fuel buying habits:

- Do they always buy from the same source? If so, fuel quality problems can usually be discounted.
- Do they buy their fuel from whichever fuel station that is advertising the lowest price? If so, check the fuel tank for signs of debris, water, or other contamination.

ENGINE CRANKS BUT WILL NOT START (2.0L SOHC)

Test Description

The number(s) below refer to step(s) on the diagnostic table.

3. By performing a compression test, it can be determined if the engine has the mechanical ability to run.
9. It is important to check for the presence of spark from all of the ignition wires. If spark is present from one to three of the ignition coil terminals, the crankshaft position sensor (CPS) is OK.
19. In checking the electronic control module (ECM) outputs for the electronic spark timing signal, it recommended to use an oscilloscope to view the varying voltage signals. In measuring these outputs with a voltmeter, intermittent errors may occur that cannot be seen by a voltmeter.
35. This step checks for proper operation of the ECM's control of the fuel pump circuit.
59. This step checks for a ground signal being supplied by the ECM to operate the fuel injectors. If there is no ground present during the cranking of the engine, and the fuel injector wiring is OK, the ECM is at fault.

Engine Cranks But Will Not Start (2.0L SOHC)

Caution: Use only electrically insulated pliers when handling ignition wires with the engine running to prevent an electrical shock.

Caution: Do not pinch or restrict nylon fuel lines. Damage to the lines could cause a fuel leak, resulting in possible fire or personal injury.

Step	Action	Value(s)	Yes	No
1	Was the Diagnostic System Check performed?	-	Go to *Step 2*	Go to Diagnostic System Check
2	Crank the engine. Does the engine start and continue to run?	-	System OK	Go to *Step 3*
3	Perform a cylinder compression test. Is the cylinder compression for all of the cylinders at or above the value specified?	689 kPa (100 psi)	Go to *Step 7*	Go to *Step 4*
4	Inspect the timing belt alignment. Is the timing belt in alignment?	-	Go to *Step 6*	Go to *Step 5*
5	Align or replace the timing belt as needed. Is the repair complete?	-	Go to *Step 2*	-
6	Repair the internal engine damage as needed. Is the repair complete?	-	Go to *Step 2*	-
7	Inspect the fuel pump fuse. Is the problem found?	-	Go to *Step 8*	Go to *Step 9*
8	Replace the fuse. Is the repair complete?	-	Go to *Step 2*	-
9	Check for the presence of spark from all of the ignition wires while cranking the engine. Is spark present from all of the ignition wires?	-	Go to *Step 34*	Go to *Step 10*
10	1. Measure the resistance of the ignition wires. 2. Replace any of the ignition wire(s) with a resistance above the value specified. 3. Check for the presence of spark from all of the ignition wires. Is spark present from all of the ignition wires?	30,000 Ω	Go to *Step 2*	Go to *Step 11*

Engine Cranks But Will Not Start (2.0L SOHC) (Cont'd)

Step	Action	Value(s)	Yes	No
11	1. Turn the ignition OFF. 2. Disconnect the crankshaft position sensor (CPS) connector. 3. Turn the ignition ON. 4. Measure the voltage between the CPS connector terminals A and C. Does the voltage measure near the value specified?	1.08 V	Go to *Step 12*	Go to *Step 13*
12	Measure the voltage between the CPS connector terminals B and C. Does the voltage measure near the value specified?	1.08 V	Go to *Step 19*	Go to *Step 14*
13	Measure the voltage between the CPS connector terminals A and ground. Does the voltage measure near the value specified?	1.08 V	Go to *Step 15*	Go to *Step 16*
14	Measure the voltage between the CPS connector terminals B and ground. Does the voltage measure near the value specified?	1.08 V	Go to *Step 15*	Go to *Step 17*
15	Check for an open or short in the wire between the CPS connector terminal C and ground. Is the problem found?	-	Go to *Step 18*	Go to *Step 33*
16	Check for an open or short in the wire between the CPS connector terminal A and the ECM connector terminal A2. Is the problem found?	-	Go to *Step 18*	Go to *Step 33*
17	Check for an open or short in the wire between the CPS connector terminal B and the ECM connector terminal B3. Is the problem found?	-	Go to *Step 18*	Go to *Step 33*
18	Repair the wiring as needed. Is the repair complete?	-	Go to *Step 2*	-
19	1. Disconnect the direct ignition system (DIS) ignition coil connector to prevent the vehicle from starting. 2. Measure the voltage at the ECM connector terminal A2 by backprobing the ECM connector. Are the voltage readings near the values specified?	1.08 V with ignition ON, 1.20 V during cranking	Go to *Step 20*	Go to *Step 21*
20	Measure the voltage at the ECM connector terminal B3 by backprobing the ECM connector. Are the voltage readings near the values specified?	1.08 V with ignition ON, 1.20 V during cranking	Go to Step 22	Go to *Step 21*
21	Replace the crankshaft position sensor. Is the repair complete?	-	Go to *Step 2*	-
22	1. Turn the ignition OFF. 2. Disconnect the electrical connector at the DIS ignition coil. 3. Connect a test light between terminal D of the DIS ignition coil connector and ground. 4. Turn the ignition ON. Is the test light on?	-	Go to *Step 23*	Go to *Step 24*
23	Connect a test light between terminal C of the DIS ignition coil connector and battery positive. Is the test light on?	-	Go to *Step 27*	Go to *Step 25*

Engine Cranks But Will Not Start (2.0L SOHC) (Cont'd)

Step	Action	Value(s)	Yes	No
24	Check for an open in the wiring between the battery and the DIS ignition coil connector terminal D. Is the problem found?	-	Go to *Step 26*	Go to "Ignition 1 Relay Circuit Check"
25	Check for an open in the wire from the DIS ignition coil to ground. Is the problem found?	-	Go to *Step 26*	-
26	1. Repair the wiring as needed. 2. Connect the DIS ignition coil connector. 3. Check for the presence of spark from all of the ignition wires. Is spark present from all of the ignition wires?	-	Go to *Step 2*	Go to *Step 27*
27	1. Turn the ignition OFF. 2. Disconnect the DIS ignition coil connector. 3. While cranking the engine, measure the voltage at the DIS ignition coil connector terminal B. Does the voltage fluctuate within the values specified?	0.2-2.0 V	Go to *Step 28*	Go to *Step 29*
28	While cranking the engine, measure the voltage at the DIS ignition coil connector terminal A. Does the voltage fluctuate within the values specified?	0.2-2.0 V	Go to *Step 32*	Go to *Step 30*
29	Check for an open in the wire from the DIS ignition coil connector terminal B to the ECM connector terminal D10. Is the problem found?	-	Go to *Step 31*	Go to *Step 33*
30	Check for an open in the wire from the DIS ignition coil connector terminal A to the ECM connector terminal C3. Is the problem found?	-	Go to *Step 31*	Go to *Step 33*
31	1. Repair the wiring as needed. 2. Connect the DIS ignition coil connector. 3. Check for the presence of spark from all of the ignition wires. Is spark present from all of the ignition wires?	-	Go to *Step 2*	Go to *Step 32*
32	Replace the direct ignition system ignition coil. Is the repair complete?	-	Go to *Step 2*	-
33	Replace the electronic control module. Is the repair complete?	-	Go to *Step 2*	-
34	1. Turn the ignition OFF. 2. Connect a fuel pressure gauge. 3. Crank the engine. Is any fuel pressure present?	-	Go to *Step 37*	Go to *Step 35*
35	1. Turn the ignition OFF. 2. Disconnect the electrical connector at the fuel pump. 3. Connect a test light between the fuel pump connector terminals 3 and 2. 4. Turn the ignition ON. 5. With the ignition ON, the test light should light for the time specified. Is the test light on?	2 sec	Go to *Step 36*	Go to *Step 46*

Engine Cranks But Will Not Start (2.0L SOHC) (Cont'd)

Step	Action	Value(s)	Yes	No
36	Replace the fuel pump. Is the repair complete?	-	Go to *Step 2*	-
37	Is the fuel pressure within the value specified?	283-324 kPa (41-47 psi)	Go to *Step 41*	Go to *Step 38*
38	1. Check the fuel filter for a restriction. 2. Inspect the fuel lines for kinks and restrictions. Is the problem found?	-	Go to *Step 39*	Go to *Step 40*
39	1. Replace the fuel filter and/or the fuel lines as needed. 2. Connect a fuel pressure gauge. 3. Crank the engine. Is the fuel pressure within the value specified?	283-324 kPa (41-47 psi)	Go to *Step 2*	Go to *Step 40*
40	1. Disconnect the vacuum line from the fuel pressure regulator. 2. Inspect the vacuum line for the presence of fuel. 3. Inspect the fuel pressure regulator vacuum port for the presence of fuel. Is any fuel present?	-	Go to *Step 43*	Go to *Step 44*
41	Check the fuel for contamination. Is the fuel contaminated?	-	Go to *Step 42*	Go to *Step 58*
42	1. Remove the contaminated fuel from the fuel tank. 2. Clean the fuel tank as needed. Is the repair complete?	-	Go to *Step 2*	-
43	Replace the fuel pressure regulator. Is the repair complete?	-	Go to *Step 2*	-
44	1. Remove the fuel pump assembly from the fuel tank. 2. Inspect the fuel pump sender and the fuel coupling hoses for a restriction. 3. Inspect the in-tank fuel filter for a restriction. Is the problem found?	-	Go to *Step 45*	Go to *Step 36*
45	Replace the fuel pump sender, the intank fuel filter, and/or the fuel coupling hoses as needed. Is the repair complete?	-	Go to *Step 2*	-
46	1. Turn the ignition OFF. 2. Disconnect the electrical connector at the fuel pump. 3. Connect a test light between the fuel pump connector terminal 3 and a known good ground. 4. Turn the ignition ON. 5. With the ignition ON, the test light should light for the time specified. Is the test light on?	2 sec	Go to *Step 47*	Go to *Step 48*
47	Repair the open wire between the fuel pump connector terminal 2 and ground. Is the repair complete?	-	Go to *Step 2*	-

Engine Cranks But Will Not Start (2.0L SOHC) (Cont'd)

Step	Action	Value(s)	Yes	No
48	1. Turn the ignition OFF. 2. Disconnect the fuel pump relay. 3. Connect a test light between the fuel pump relay connector terminal 85 and ground. 4. Turn the ignition ON. Is the test light on?	-	Go to *Step 49*	Go to *Step 54*
49	1. Turn the ignition OFF. 2. Connect a test light between the fuel pump relay connector terminal 86 and battery positive. 3. Turn the ignition ON. 4. With the ignition ON, the test light should light for the time specified. Is the test light on?	2 sec	Go to *Step 50*	Go to *Step 55*
50	1. Turn the ignition OFF. 2. Connect a test light between the fuel pump relay connector terminal 30 and ground. Is the test light on?	-	Go to *Step 51*	Go to *Step 57*
51	1. Turn the ignition OFF. 2. Check the wire between the fuel pump relay connector terminal 87 and the fuel pump connector terminal 3 for an open or short to ground. Is the problem found?	-	Go to *Step 52*	Go to *Step 53*
52	Repair the wire between the fuel pump relay connector terminal 87 and the fuel pump connector terminal 3. Is the repair complete?	-	Go to *Step 2*	-
53	Replace the fuel pump relay. Is the repair complete?	-	Go to *Step 2*	-
54	1. Inspect the engine fuse block fuse EF16. 2. Check for an open in the wiring between the ignition 1 relay connector terminal 87 and the fuel pump relay connector terminal 85. Is the problem found?	-	Go to *Step 65*	Go to "Ignition 1 Relay Circuit Check"
55	Check the wire between the fuel pump relay connector terminal 86 to the ECM connector terminal B6 for an open. Is the problem found?	-	Go to *Step 56*	Go to *Step 33*
56	Repair the wire between the fuel pump relay connector terminal 86 to the ECM connector terminal B6. Is the repair complete?	-	Go to *Step 2*	-
57	Repair the wire between the fuel pump relay connector terminal 30 and the battery. Is the repair complete?	-	Go to *Step 2*	-

Engine Cranks But Will Not Start (2.0L SOHC) (Cont'd)

Step	Action	Value(s)	Yes	No
58	1. Turn the ignition OFF. 2. Disconnect the fuel injector harness connectors from all of the fuel injectors. 3. Turn the ignition ON. 4. Connect a test light between the fuel injector harness connector 1 and ground. 5. Repeat step 4 for each of the remaining fuel injectors. Is the test light on at all of the fuel injectors?	-	Go to *Step 59*	Go to *Step 62*
59	1. Turn the ignition OFF. 2. Connect a test light between the fuel injector harness connector terminal 2 and battery positive. 3. Crank the engine. 4. Repeat steps three and four for each of the remaining fuel injectors. Does the test light flash for all of the fuel injectors?	-	Go to *Step 60*	Go to *Step 63*
60	Measure the resistance of each fuel injector. Is the resistance within the value specified (the resistance will increase slightly at higher temperatures)?	11.6-12.4 Ω	System OK	Go to *Step 61*
61	Replace any of the fuel injectors with a resistance out of specification. Is the repair complete?	-	Go to *Step 2*	-
62	Repair the open wire(s) between the fuel injector harness connector(s) terminal 1 and the battery. Is the repair complete?	-	Go to *Step 2*	-
63	1. Check for an open between the fuel injector harness connector terminal 2 and the ECM connector terminal C10 for the fuel injectors one and four. 2. Check for an open between the fuel injector harness connector terminal 2 and the ECM connector terminal C15 for the fuel injectors two and three. Is the problem found?	-	Go to *Step 64*	Go to *Step 66*
64	Repair the open fuel injector harness wire(s). Is the repair complete?	-	Go to *Step 2*	-
65	Replace the fuse or repair the wiring as needed. Is the repair complete?	-	Go to *Step 2*	-
66	1. Inspect the engine fuse block fuse EF17. 2. Check for an open between the circuits from terminal 1 for each of the four fuel injectors and the ignition 1 relay connector terminal 87. Is the problem found?	-	Go to *Step 65*	Go to "Ignition 1 Relay Circuit Check"

ENGINE CRANKS BUT WILL NOT START (2.0L DOHC)

Test Description

The number(s) below refer to step(s) on the diagnostic table.

3. By performing a compression test, it can be determined if the engine has the mechanical ability to run.
9. It is important to check for the presence of spark from all of the ignition wires. If spark is present from one to three of the ignition coil terminals, the crankshaft position sensor (CPS) is OK.
19. In checking the electronic control module (ECM) outputs for the electronic spark timing signal, it recommended to use an oscilloscope to view the varying voltage signals. In measuring these outputs with a voltmeter, intermittent errors may occur that cannot be seen by a voltmeter.
35. This step checks for proper operation of the ECM's control of the fuel pump circuit.
59. This step checks for a ground signal being supplied by the ECM to operate the fuel injectors. If there is no ground present during the cranking of the engine, and the fuel injector wiring is OK, the ECM is at fault.

Engine Cranks But Will Not Start (2.0L DOHC)

Caution: Use only electrically insulated pliers when handling ignition wires with the engine running to prevent an electrical shock.

Caution: Do not pinch or restrict nylon fuel lines. Damage to the lines could cause a fuel leak, resulting in possible fire or personal injury.

Step	Action	Value(s)	Yes	No
1	Was the Diagnostic System Check performed?	-	Go to *Step 2*	Go to Diagnostic System Check
2	Crank the engine. Does the engine start and continue to run?	-	System OK	Go to *Step 3*
3	Perform a cylinder compression test. Is the cylinder compression for all of the cylinders at or above the value specified?	689 kPa (100 psi)	Go to *Step 7*	Go to *Step 4*
4	Inspect the timing belt alignment. Is the timing belt in alignment?	-	Go to *Step 6*	Go to *Step 5*
5	Align or replace the timing belt as needed. Is the repair complete?	-	Go to *Step 2*	-
6	Repair the internal engine damage as needed. Is the repair complete?	-	Go to *Step 2*	-
7	Inspect the fuel pump fuse. Is the problem found?	-	Go to *Step 8*	Go to *Step 9*
8	Replace the fuse. Is the repair complete?	-	Go to *Step 2*	-
9	Check for the presence of spark from all of the ignition wires while cranking the engine. Is spark present from all of the ignition wires?	-	Go to *Step 34*	Go to *Step 10*
10	1. Measure the resistance of the ignition wires. 2. Replace any of the ignition wire(s) with a resistance above the value specified. 3. Check for the presence of spark from all of the ignition wires. Is spark present from all of the ignition wires?	30,000 Ω	Go to *Step 2*	Go to *Step 11*

Engine Cranks But Will Not Start (2.0L DOHC) (Cont'd)

Step	Action	Value(s)	Yes	No
11	1. Turn the ignition OFF. 2. Disconnect the crankshaft position sensor (CPS) connector. 3. Turn the ignition ON. 4. Measure the voltage between the CPS connector terminals A and C. Does the voltage measure near the value specified?	1.08 V	Go to *Step 12*	Go to *Step 13*
12	Measure the voltage between the CPS connector terminals B and C. Does the voltage measure near the value specified?	1.08 V	Go to *Step 19*	Go to *Step 14*
13	Measure the voltage between the CPS connector terminal A and ground. Does the voltage measure near the value specified?	1.08 V	Go to *Step 15*	Go to *Step 16*
14	Measure the voltage between the CPS connector terminal B and ground. Does the voltage measure near the value specified?	1.08 V	Go to *Step 15*	Go to *Step 17*
15	Check for an open or short in the wire between the CPS connector terminal C and ground. Is the problem found?	-	Go to *Step 18*	Go to *Step 33*
16	Check for an open or short in the wire between the CPS connector terminal A and the ECM connector terminal B14. Is the problem found?	-	Go to *Step 18*	Go to *Step 33*
17	Check for an open or short in the wire between the CPS connector terminal B and the ECM connector terminal A16. Is the problem found?	-	Go to *Step 18*	Go to *Step 33*
18	Repair the wiring as needed. Is the repair complete?	-	Go to *Step 2*	-
19	1. Disconnect the direct ignition system (DIS) ignition coil connector to prevent the vehicle from starting. 2. Measure the voltage at the ECM connector terminal B14 by backprobing the ECM connector. Are the voltage readings near the values specified?	1.08 V with ignition ON, 1.20 V during cranking	Go to *Step 20*	Go to *Step 21*
20	Measure the voltage at the ECM connector terminal A16 by backprobing the ECM connector. Are the voltage readings near the values specified?	1.08 V with ignition ON, 1.20 V during cranking	Go to Step 22	Go to *Step 21*
21	Replace the crankshaft position sensor. Is the repair complete?	-	Go to *Step 2*	-
22	1. Turn the ignition OFF. 2. Disconnect the electrical connector at the DIS ignition coil. 3. Connect a test light between terminal D of the DIS ignition coil connector and ground. 4. Turn the ignition ON. Is the test light on?	-	Go to *Step 23*	Go to *Step 24*
23	Connect a test light between terminal C of the DIS ignition coil connector and battery positive. Is the test light on?	-	Go to *Step 27*	Go to *Step 25*

Engine Cranks But Will Not Start (2.0L DOHC) (Cont'd)

Step	Action	Value(s)	Yes	No
24	Check for an open in the wiring between the battery and the DIS ignition coil connector terminal D. Is the problem found?	-	Go to *Step 26*	Go to "Ignition 1 Relay Circuit Check"
25	Check for an open in the wire from the DIS ignition coil to ground. Is the problem found?	-	Go to *Step 26*	-
26	1. Repair the wiring as needed. 2. Connect the DIS ignition coil connector. 3. Check for the presence of spark from all of the ignition wires. Is spark present from all of the ignition wires?	-	Go to *Step 2*	Go to *Step 27*
27	1. Turn the ignition OFF. 2. Disconnect the DIS ignition coil connector. 3. While cranking the engine, measure the voltage at the DIS ignition coil connector terminal B. Does the voltage fluctuate within the values specified?	0.2-2.0 V	Go to *Step 28*	Go to *Step 29*
28	While cranking the engine, measure the voltage at the DIS ignition coil connector terminal A. Does the voltage fluctuate within the values specified?	0.2-2.0 V	Go to *Step 32*	Go to *Step 30*
29	Check for an open in the wire from the DIS ignition coil connector terminal B to the ECM connector terminal C14. Is the problem found?	-	Go to *Step 31*	Go to *Step 33*
30	Check for an open in the wire from the DIS ignition coil connector terminal A to the ECM connector terminal D14. Is the problem found?	-	Go to *Step 31*	Go to *Step 33*
31	1. Repair the wiring as needed. 2. Connect the DIS ignition coil connector. 3. Check for the presence of spark from all of the ignition wires. Is spark present from all of the ignition wires?	-	Go to *Step 2*	Go to *Step 32*
32	Replace the direct ignition system ignition coil. Is the repair complete?	-	Go to *Step 2*	-
33	Replace the electronic control module. Is the repair complete?	-	Go to *Step 2*	-
34	1. Turn the ignition OFF. 2. Connect a fuel pressure gauge. 3. Crank the engine. Is any fuel pressure present?	-	Go to *Step 37*	Go to *Step 35*
35	1. Turn the ignition OFF. 2. Disconnect the electrical connector at the fuel pump. 3. Connect a test light between the fuel pump connector terminals 3 and 2. 4. Turn the ignition ON. 5. With the ignition ON, the test light should light for the time specified. Is the test light on?	2 sec	Go to *Step 36*	Go to *Step 46*

Engine Cranks But Will Not Start (2.0L DOHC) (Cont'd)

Step	Action	Value(s)	Yes	No
36	Replace the fuel pump. Is the repair complete?	-	Go to *Step 2*	-
37	Is the fuel pressure within the value specified?	283-324 kPa (41-47 psi)	Go to *Step 41*	Go to *Step 38*
38	1. Check the fuel filter for a restriction. 2. Inspect the fuel lines for kinks and restrictions. Is the problem found?	-	Go to *Step 39*	Go to *Step 40*
39	1. Replace the fuel filter and/or the fuel lines as needed. 2. Connect a fuel pressure gauge. 3. Crank the engine. Is the fuel pressure within the value specified?	283-324 kPa (41-47 psi)	Go to *Step 2*	Go to *Step 40*
40	1. Disconnect the vacuum line from the fuel pressure regulator. 2. Inspect the vacuum line for the presence of fuel. 3. Inspect the fuel pressure regulator vacuum port for the presence of fuel. Is any fuel present?	-	Go to *Step 43*	Go to *Step 44*
41	Check the fuel for contamination. Is the fuel contaminated?	-	Go to *Step 42*	Go to *Step 58*
42	1. Remove the contaminated fuel from the fuel tank. 2. Clean the fuel tank as needed. Is the repair complete?	-	Go to *Step 2*	-
43	Replace the fuel pressure regulator. Is the repair complete?	-	Go to *Step 2*	-
44	1. Remove the fuel pump assembly from the fuel tank. 2. Inspect the fuel pump sender and the fuel coupling hoses for a restriction. 3. Inspect the intank fuel filter for a restriction. Is the problem found?	-	Go to *Step 45*	Go to *Step 36*
45	Replace the fuel pump sender, the intank fuel filter, and/or the fuel coupling hoses as needed. Is the repair complete?	-	Go to *Step 2*	-
46	1. Turn the ignition OFF. 2. Disconnect the electrical connector at the fuel pump. 3. Connect a test light between the fuel pump connector terminal 3 and a known good ground. 4. Turn the ignition ON. 5. With the ignition ON, the test light should light for the time specified. Is the test light on?	2 sec	Go to *Step 47*	Go to *Step 48*
47	Repair the open wire between the fuel pump connector terminal 2 and ground. Is the repair complete?	-	Go to *Step 2*	-

Engine Cranks But Will Not Start (2.0L DOHC) (Cont'd)

Step	Action	Value(s)	Yes	No
48	1. Turn the ignition OFF. 2. Disconnect the fuel pump relay. 3. Connect a test light between the fuel pump relay connector terminal 85 and ground. 4. Turn the ignition ON. Is the test light on?	-	Go to *Step 49*	Go to *Step 54*
49	1. Turn the ignition OFF. 2. Connect a test light between the fuel pump relay connector terminal 86 and battery positive. 3. Turn the ignition ON. 4. With the ignition ON, the test light should light for the time specified. Is the test light on?	2 sec	Go to *Step 50*	Go to *Step 55*
50	1. Turn the ignition OFF. 2. Connect a test light between the fuel pump relay connector terminal 30 and ground. Is the test light on?	-	Go to *Step 51*	Go to *Step 57*
51	1. Turn the ignition OFF. 2. Check the wire between the fuel pump relay connector terminal 87 and the fuel pump connector terminal 3 for an open or short to ground. Is the problem found?	-	Go to *Step 52*	Go to *Step 53*
52	Repair the wire between the fuel pump relay connector terminal 87 and the fuel pump connector terminal 3. Is the repair complete?	-	Go to *Step 2*	-
53	Replace the fuel pump relay. Is the repair complete?	-	Go to *Step 2*	-
54	1. Inspect the engine fuse block fuse EF16. 2. Check for an open in the wiring between the ignition 1 relay connector terminal 87 and the fuel pump relay connector terminal 85. Is the problem found?	-	Go to *Step 65*	Go to "Ignition 1 Relay Circuit Check"
55	Check the wire between the fuel pump relay connector terminal 86 to the ECM connector terminal A12 for an open. Is the problem found?	-	Go to *Step 56*	Go to *Step 33*
56	Repair the wire between the fuel pump relay connector terminal 86 to the ECM connector terminal A12. Is the repair complete?	-	Go to *Step 2*	-
57	Repair the wire between the fuel pump relay connector terminal 30 and the battery. Is the repair complete?	-	Go to *Step 2*	-

Engine Cranks But Will Not Start (2.0L DOHC) (Cont'd)

Step	Action	Value(s)	Yes	No
58	1. Turn the ignition OFF. 2. Disconnect the fuel injector harness connectors from all of the fuel injectors. 3. Turn the ignition ON. 4. Connect a test light between the fuel injector harness connector 1 and ground. 5. Repeat step 4 for each of the remaining fuel injectors. Is the test light on at all of the fuel injectors?	-	Go to *Step 59*	Go to *Step 62*
59	1. Turn the ignition OFF. 2. Connect a test light between the fuel injector harness connector terminal 2 and battery positive. 3. Crank the engine. 4. Repeat steps three and four for each of the remaining fuel injectors. Does the test light flash for all of the fuel injectors?	-	Go to *Step 60*	Go to *Step 63*
60	Measure the resistance of each fuel injector. Is the resistance within the value specified (the resistance will increase slightly at higher temperatures)?	11.6-12.4 Ω	System OK	Go to *Step 61*
61	Replace any of the fuel injectors with a resistance out of specification. Is the repair complete?	-	Go to *Step 2*	-
62	Repair the open wire(s) between the fuel injector harness connector(s) terminal 1 and the battery. Is the repair complete?	-	Go to *Step 2*	-
63	1. Check for an open between the fuel injector harness connector terminal 2 and the ECM connector terminal C4 for the fuel injectors one and four. 2. Check for an open between the fuel injector harness connector terminal 2 and the ECM connector terminal C6 for the fuel injectors two and three. Is the problem found?	-	Go to *Step 64*	Go to *Step 66*
64	Repair the open fuel injector harness wire(s). Is the repair complete?	-	Go to *Step 2*	-
65	Replace the fuse or repair the wiring as needed. Is the repair complete?	-	Go to *Step 2*	-
66	1. Inspect the engine fuse block fuse EF17. 2. Check for an open between the circuit from terminal 1 for each of the four fuel injectors and the ignition 1 relay connector terminal 87. Is the problem found?	-	Go to *Step 65*	Go to "Ignition 1 Relay Circuit Check"

BLANK

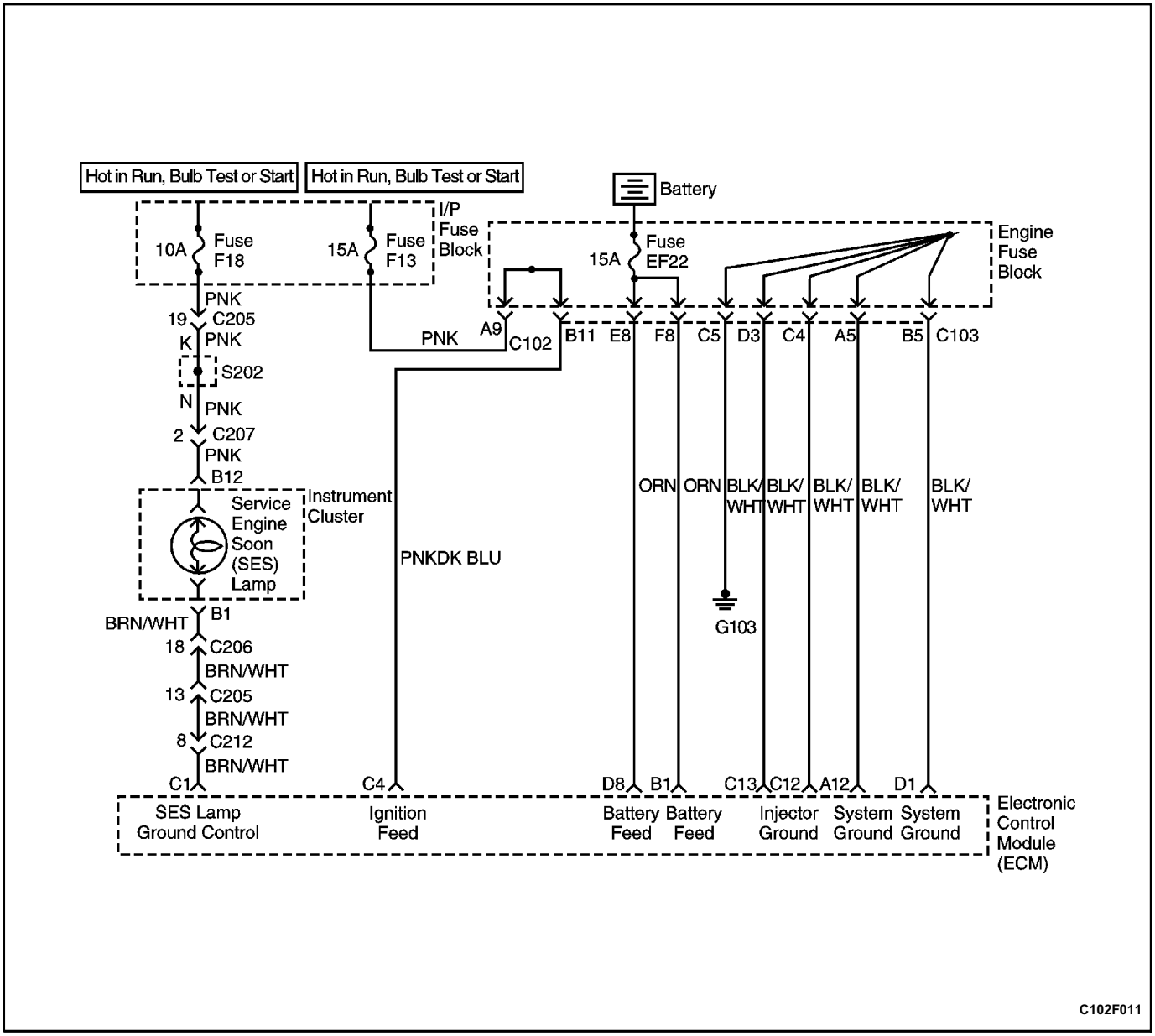

NO MALFUNCTION INDICATOR LAMP (2.0L SOHC)

Circuit Description

There should always be a steady malfunction indicator lamp (MIL) when the ignition is ON and the engine is stopped. Battery voltage is supplied directly to the MIL bulb. The electronic control module (ECM) will control the MIL lamp and turn it on by providing a ground path through the ECM connector terminal C1 wire to the MIL lamp.

Diagnostic Aids

- If the engine runs OK, inspect for a faulty malfunction indicator lamp bulb.
- If the engine cranks but will not start, check for open fuses and poor electronic control module (ECM) connections. Particularly check for ECM ignition and battery feeds, including clean and tight ECM ground connections.

Test Description

The number(s) below refer to step(s) on the diagnostic table.

4. This step checks for battery voltage in the instrument panel malfunction indicator lamp (MIL) bulb socket.
8. This step, along with step 9, checks for battery feed to the electronic control module (ECM).
10. This step checks for ignition feed to the ECM.
24. At this point the MIL lamp wiring is OK. The problem is a faulty ECM.

No Malfunction Indicator Lamp (2.0L SOHC)

Step	Action	Value(s)	Yes	No
1	Start the engine. Does the engine start?	-	Go to *Step 2*	Go to *Step 7*
2	1. Turn the ignition OFF. 2. Disconnect the electronic control module (ECM) connectors. 3. Turn the ignition ON. 4. Connect a test light between the ECM connector terminal C1 and ground. Is the malfunction indicator lamp (MIL) on?	-	Go to *Step 14*	Go to *Step 3*
3	Inspect the kick panel fuse F18. Is the fuse OK?	-	Go to *Step 4*	Go to *Step 15*
4	Check the ignition feed to the MIL bulb using a voltmeter. Is the voltage within the value specified?	11-14 V	Go to *Step 5*	Go to *Step 16*
5	Inspect the MIL bulb. Is the MIL bulb OK?	-	Go to *Step 6*	Go to *Step 17*
6	Check for an open or short to voltage in the wire between the ECM connector terminal C1 and the MIL bulb. Is the problem found?	-	Go to *Step 18*	Go to *Step 13*
7	Inspect the ECM fuse F13. Is the problem found?	-	Go to *Step 19*	Go to *Step 8*
8	1. Turn the ignition OFF. 2. Disconnect the ECM 24 pin connector. 3. Connect a test light to ECM connector terminal B1 and ground. Is the test light on?	-	Go to *Step 9*	Go to *Step 20*
9	1. Turn the ignition OFF. 2. Disconnect the ECM 32 pin connector. 3. Connect a test light between the ECM connector terminal D8 and ground. Is the test light on?	-	Go to *Step 10*	Go to *Step 21*
10	1. Turn the ignition OFF. 2. Connect a test light between the ECM connector terminal C4 and ground. 3. Turn the ignition ON. Is the test light on?	-	Go to *Step 11*	Go to *Step 22*
11	Inspect the ECM connector terminals B1, D8, and C4 for damage or poor mating. Is the problem found?	-	Go to *Step 12*	Go to *Step 14*
12	Repair the ECM connector terminal(s) as needed. Is the repair complete?	-	Go to □Diagnostic System Check□	-
13	Inspect for damage or poor mating at the ECM connector terminal C1. Is the problem found?	-	Go to *Step 12*	Go to *Step 14*
14	Check the ECM connector terminals A12 and D1 for ground. Are the grounds OK?	-	Go to *Step 24*	Go to *Step 23*

No Malfunction Indicator Lamp (2.0L SOHC) (Cont'd)

Step	Action	Value(s)	Yes	No
15	1. Turn the ignition OFF. 2. Replace the fuse. 3. Turn the ignition ON. Is the MIL lamp on?	-	Go to "Diagnostic System Check"	Go to *Step 4*
16	Repair the open in the ignition feed wire to the MIL bulb. Is the repair complete?	-	Go to "Diagnostic System Check"	-
17	Replace the service engine soon bulb. Is the repair complete?	-	Go to "Diagnostic System Check"	-
18	Repair the wire between the ECM connector terminal C1 and the MIL bulb. Is the repair complete?	-	Go to "Diagnostic System Check"	-
19	1. Turn the ignition OFF. 2. Replace the ECM fuse. 3. Turn the ignition ON. Is the MIL lamp on?	-	Go to "Diagnostic System Check"	Go to *Step 1*
20	Repair the wire between the ECM connector terminal B1 and the battery. Is the repair complete?	-	Go to "Diagnostic System Check"	-
21	Repair the wire between the ECM connector terminal D8 and the battery. Is the repair complete?	-	Go to "Diagnostic System Check"	-
22	Repair the wire between the ECM connector terminal C4 and fuse F13. Is the repair complete?	-	Go to "Diagnostic System Check"	-
23	Repair the open wire between the ECM connector terminals A12 and/or D1 and ground. Is the repair complete?	-	Go to "Diagnostic System Check"	-
24	Replace the electronic control module. Is the repair complete?	-	Go to "Diagnostic System Check"	-

BLANK

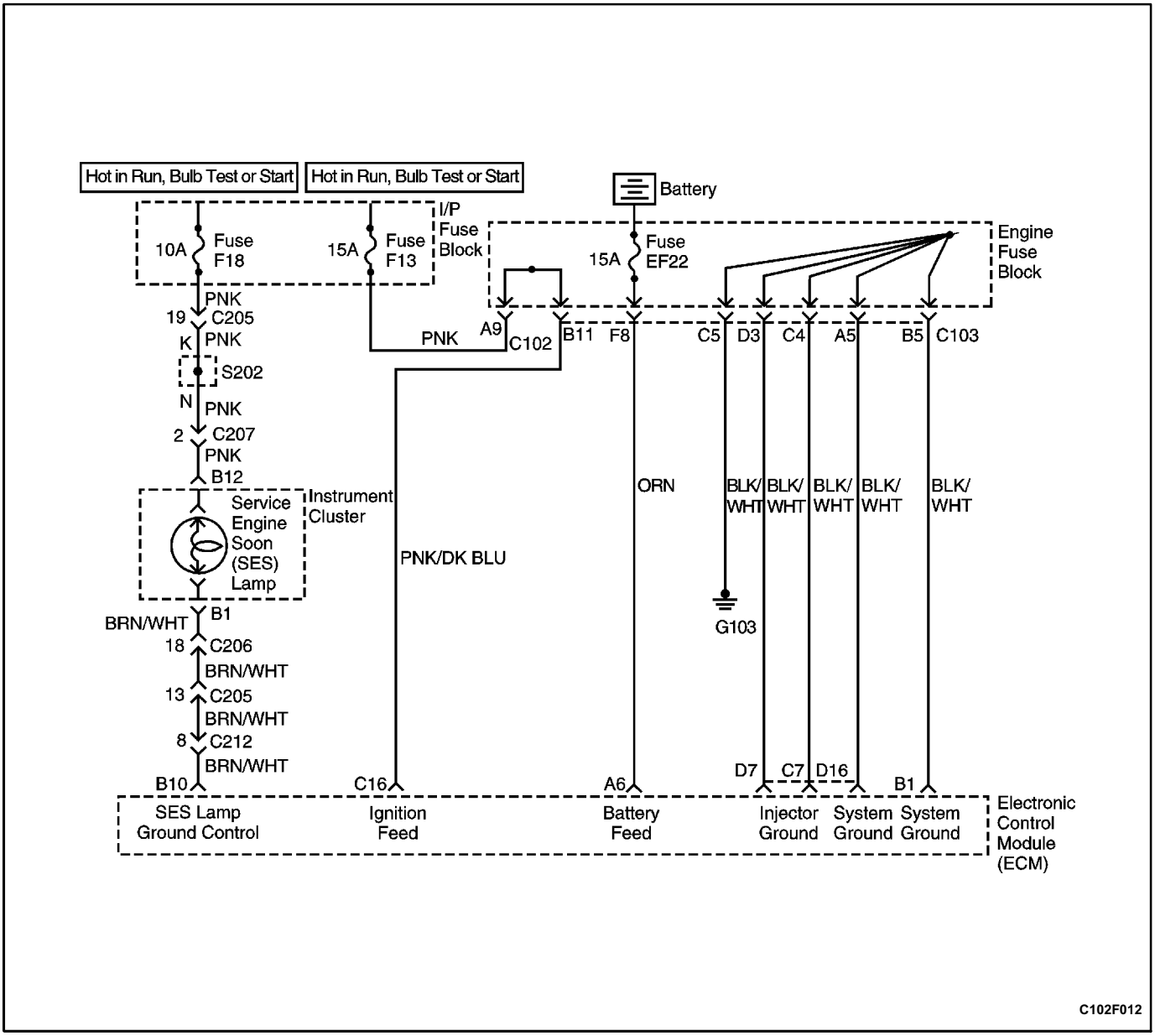

NO MALFUNCTION INDICATOR LAMP (2.0L DOHC)

Circuit Description

There should always be a steady malfunction indicator lamp (MIL) when the ignition is ON and the engine is stopped. Battery voltage is supplied directly to the MIL bulb. The electronic control module (ECM) will control the MIL lamp and turn it on by providing a ground path through the ECM connector terminal B10 wire to the MIL lamp.

Diagnostic Aids

- If the engine runs OK, inspect for a faulty malfunction indicator lamp bulb.
- If the engine cranks but will not start, check for open fuses and poor electronic control module (ECM) connections. Particularly check for ECM ignition and battery feeds, including clean and tight ECM ground connections.

Test Description

The number(s) below refer to step(s) on the diagnostic table.

4. This step checks for battery voltage in the instrument panel malfunction indicator lamp (MIL) bulb socket.
8. This step checks for battery feed to the electronic control module (ECM).
9. This step checks for ignition feed to the ECM.
22. At this point the MIL lamp wiring is OK. The problem is a faulty ECM.

No Malfunction Indicator Lamp (2.0L DOHC)

Step	Action	Value(s)	Yes	No
1	Start the engine. Does the engine start?	-	Go to *Step 2*	Go to *Step 7*
2	1. Turn the ignition OFF. 2. Disconnect the electronic control module (ECM) connectors. 3. Turn the ignition ON. 4. Connect a test light between the ECM connector terminal B10 and ground. Is the malfunction indicator lamp (MIL) on?	-	Go to *Step 13*	Go to *Step 3*
3	Inspect the kick panel fuse F18. Is the fuse OK?	-	Go to *Step 4*	Go to *Step 14*
4	Check the ignition feed to the MIL bulb using a voltmeter. Is the voltage within the value specified?	11-14 V	Go to *Step 5*	Go to *Step 15*
5	Inspect the MIL bulb. Is the MIL bulb OK?	-	Go to *Step 6*	Go to *Step 16*
6	Check for an open or short to voltage in the wire between the ECM connector terminal B10 and the MIL bulb. Is the problem found?	-	Go to *Step 17*	Go to *Step 12*
7	Inspect the ECM fuse F13. Is the problem found?	-	Go to *Step 18*	Go to *Step 8*
8	1. Turn the ignition OFF. 2. Disconnect the ECM red connector. 3. Connect a test light to ECM connector terminal A6 and ground. Is the test light on?	-	Go to *Step 9*	Go to *Step 19*
9	1. Turn the ignition OFF. 2. Disconnect the ECM white connector. 3. Connect a test light between the ECM connector terminal C16 and ground. Is the test light on?	-	Go to *Step 10*	Go to *Step 20*
10	Inspect the ECM connector terminals A6 and C16 for damage or poor mating. Is the problem found?	-	Go to *Step 11*	Go to *Step 13*
11	Repair the ECM connector terminal(s) as needed. Is the repair complete?	-	Go to □Diagnostic System Check□	-
12	Inspect for damage or poor mating at the ECM connector terminal B10. Is the problem found?	-	Go to *Step 11*	Go to *Step 13*
13	Check the ECM connector terminals B1 and D16 for ground. Are the grounds OK?	-	Go to *Step 22*	Go to *Step 21*
14	1. Turn the ignition OFF. 2. Replace the fuse. 3. Turn the ignition ON. Is the MIL lamp on?	-	Go to □Diagnostic System Check"	Go to *Step 4*

No Malfunction Indicator Lamp (2.0L DOHC) (Cont'd)

Step	Action	Value(s)	Yes	No
15	Repair the open in the ignition feed wire to the MIL bulb. Is the repair complete?	-	Go to "Diagnostic System Check"	-
16	Replace the service engine soon bulb. Is the repair complete?	-	Go to "Diagnostic System Check"	-
17	Repair the wire between the ECM connector terminal B10 and the MIL bulb. Is the repair complete?	-	Go to "Diagnostic System Check"	-
18	1. Turn the ignition OFF. 2. Replace the ECM fuse. 3. Turn the ignition ON. Is the MIL lamp on?	-	Go to "Diagnostic System Check"	Go to *Step 1*
19	Repair the wire between the ECM connector terminal A6 and the battery. Is the repair complete?	-	Go to "Diagnostic System Check"	-
20	Repair the wire between the ECM connector terminal C16 and the battery. Is the repair complete?	-	Go to "Diagnostic System Check"	-
21	Repair the open wire between the ECM connector terminals B1 and/or D16 and ground. Is the repair complete?	-	Go to "Diagnostic System Check"	-
22	Replace the electronic control module. Is the repair complete?	-	Go to "Diagnostic System Check"	-

BLANK

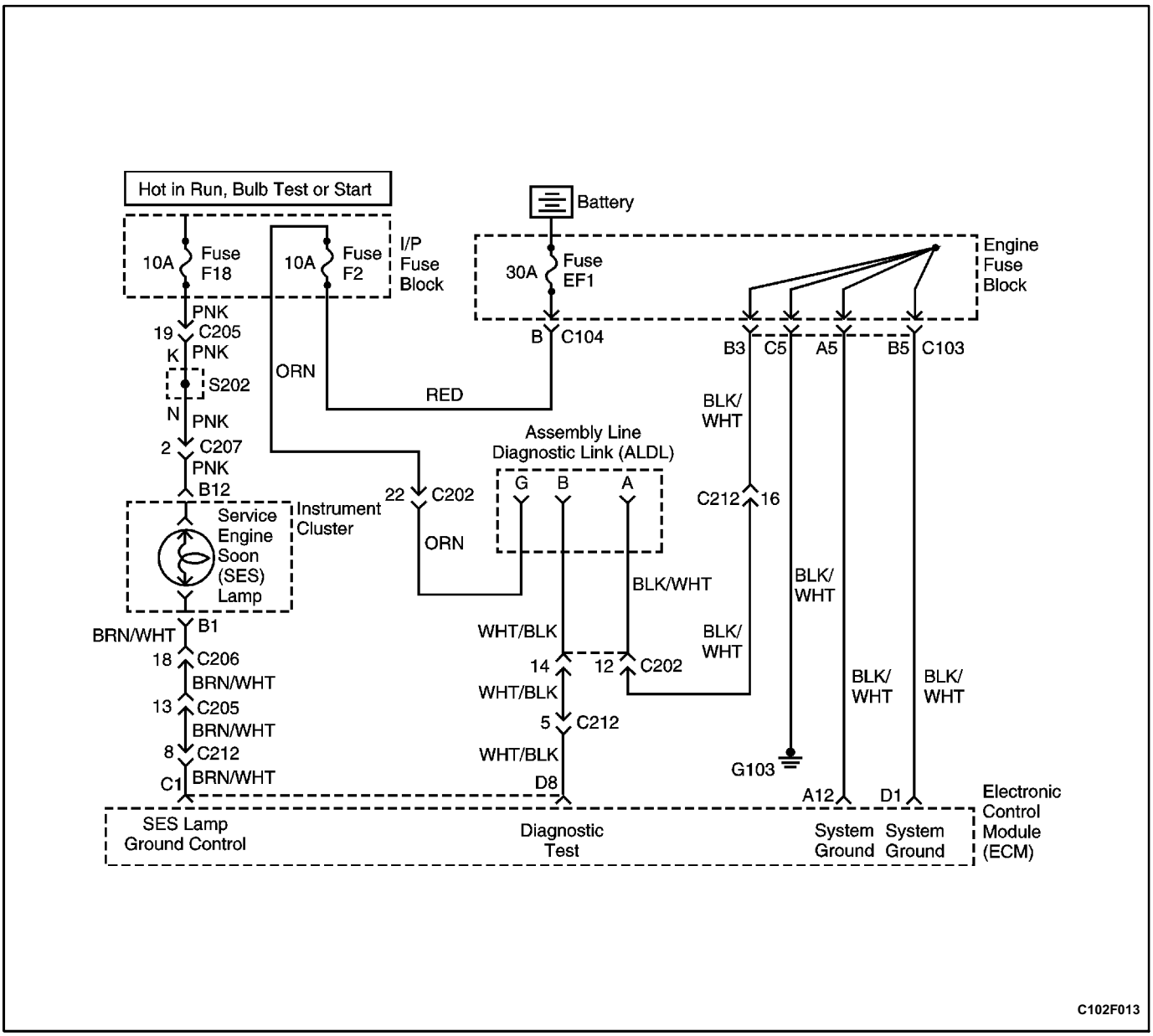

WILL NOT FLASH MALFUNCTION INDICATOR LAMP (2.0L SOHC)

Circuit Description

There should always be a steady malfunction indicator lamp (MIL) when the ignition is ON and the engine stopped. Battery ignition voltage is supplied directly to the MIL bulb. The electronic control module (ECM) will turn the MIL on by grounding the ECM connector terminal C1 wire. With the assembly line diagnostic link (ALDL) A and B terminals grounded, the MIL lamp should flash a Code 12 followed by any diagnostic trouble code(s) stored in the ECM memory. A steady MIL lamp suggests a short to ground in the ECM connector terminal C1 wire, or an open in the diagnostic test wire. A steady but dim light would indicate a failed quaddriver. The table will confirm and suggest the cause.

Diagnostic Aids

- If the engine runs OK, inspect for a faulty service engine soon (MIL) bulb.
- If the engine cranks but will not start, check for open fuses and poor electronic control module (ECM) connections. Particularly check for ECM ignition and battery feeds, including clean and tight ECM ground connections.

Test Description

The number(s) below refer to step(s) on the diagnostic table.

3. If the malfunction indicator lamp (MIL) is on when the electronic control module (ECM) white connector is disconnected, the wire to the ECM connector terminal C1 is shorted to ground.
5. This step will check for an open diagnostic test wire.
11. At this point the MIL wiring is OK. The problem is a faulty ECM.

Will Not Flash Malfunction Indicator Lamp (2.0L SOHC)

Step	Action	Value(s)	Yes	No
1	Turn the ignition ON. Is the malfunction indicator lamp (MIL) on?	-	Go to *Step 2*	Go to "No Malfunction Indicator Lamp"
2	1. Turn the ignition OFF. 2. Jumper the assembly line diagnostic link (ALDL) terminals A and B. 3. Turn the ignition ON. Does the MIL lamp flash the diagnostic trouble code (DTC) 12?	-	Go to "Diagnostic System Check"	Go to *Step 3*
3	1. Turn the ignition OFF. 2. Disconnect the ECM 32 pin connector. 3. Turn the ignition ON. Is the MIL on?	-	Go to *Step 4*	Go to *Step 5*
4	Repair the short to ground in the wire between the ECM connector terminal C1 and the MIL bulb. Is the repair complete?	-	Go to "Diagnostic System Check"	-
5	1. Turn the ignition OFF. 2. Reconnect the ECM 32 pin connector. 3. Turn the ignition ON. 4. Backprobe the ECM connector terminal D8 with a test light connected to ground. Does the MIL flash DTC 12?	-	Go to *Step 6*	Go to *Step 8*
6	Check for an open wire between the ECM connector terminal D8 and the ALDL terminal B. Is the problem found?	-	Go to *Step 10*	Go to *Step 7*
7	Repair the open wire between the ALDL terminal A and ground. Is the repair complete?	-	Go to "Diagnostic System Check"	-
8	Check for damage or poor mating at the ECM connector terminal D8. Is the problem found?	-	Go to *Step 9*	Go to *Step 11*
9	Repair the ECM connector terminal D8. Is the repair complete?	-	Go to "Diagnostic System Check"	-
10	Repair the wire between the ECM connector terminal D8 and the ALDL terminal B. Is the repair complete?	-	Go to "Diagnostic System Check"	-
11	Replace the electronic control module. Is the repair complete?	-	Go to "Diagnostic System Check"	-

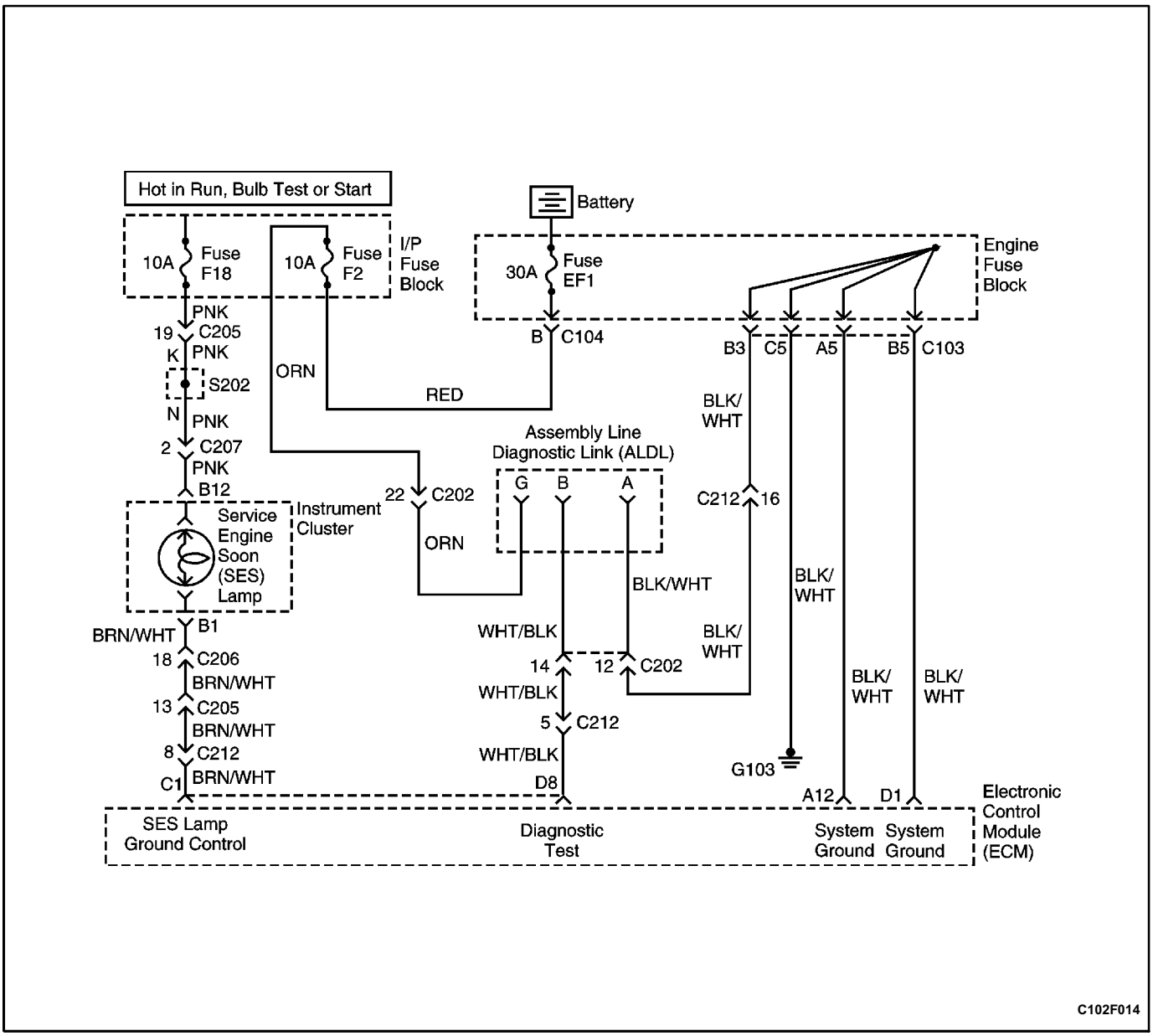

WILL NOT FLASH MALFUNCTION INDICATOR LAMP (2.0L DOHC)

Circuit Description

There should always be a steady malfunction indicator lamp (MIL) when the ignition is ON and the engine stopped. Battery ignition voltage is supplied directly to the MIL bulb. The electronic control module (ECM) will turn the MIL on by grounding the ECM connector terminal B10 wire. With the assembly line diagnostic link (ALDL) A and B terminals grounded, the MIL lamp should flash a Code 12 followed by any diagnostic trouble code(s) stored in the ECM memory. A steady MIL lamp suggests a short to ground in the ECM connector terminal B10 wire, or an open in the diagnostic test wire. A steady but dim light would indicate a failed quaddriver. The table will confirm and suggest the cause.

Diagnostic Aids

- If the engine runs OK, inspect for a faulty service engine soon (MIL) bulb.
- If the engine cranks but will not start, check for open fuses and poor electronic control module (ECM) connections. Particularly check for ECM ignition and battery feeds, including clean and tight ECM ground connections.

Test Description

The number(s) below refer to step(s) on the diagnostic table.

3. If the malfunction indicator lamp (MIL) is on when the electronic control module (ECM) red connector is disconnected, the wire to the ECM connector terminal B10 is shorted to ground.
5. This step will check for an open diagnostic test wire.
11. At this point the MIL wiring is OK. The problem is a faulty ECM.

Will Not Flash Malfunction Indicator Lamp (2.0L DOHC)

Step	Action	Value(s)	Yes	No
1	Turn the ignition ON. Is the malfunction indicator lamp (MIL) on?	-	Go to *Step 2*	Go to "No Malfunction Indicator Lamp"
2	1. Turn the ignition OFF. 2. Jumper the assembly line diagnostic link (ALDL) terminals A and B. 3. Turn the ignition ON. Does the MIL lamp flash the diagnostic trouble code (DTC) 12?	-	Go to "Diagnostic System Check"	Go to *Step 3*
3	1. Turn the ignition OFF. 2. Disconnect the ECM red connector. 3. Turn the ignition ON. Is the MIL on?	-	Go to *Step 4*	Go to *Step 5*
4	Repair the short to ground in the wire between the ECM connector terminal B10 and the MIL bulb. Is the repair complete?	-	Go to "Diagnostic System Check"	-
5	1. Turn the ignition OFF. 2. Reconnect the ECM red connector. 3. Turn the ignition ON. 4. Backprobe the ECM connector terminal B9 with a test light connected to ground. Does the MIL flash DTC 12?	-	Go to *Step 6*	Go to *Step 8*
6	Check for an open wire between the ECM connector terminal B9 and the ALDL terminal B. Is the problem found?	-	Go to *Step 10*	Go to *Step 7*
7	Repair the open wire between the ALDL terminal A and ground. Is the repair complete?	-	Go to "Diagnostic System Check"	-
8	Check for damage or poor mating at the ECM connector terminal B9. Is the problem found?	-	Go to *Step 9*	Go to *Step 11*
9	Repair the ECM connector terminal B9. Is the repair complete?	-	Go to "Diagnostic System Check"	-
10	Repair the wire between the ECM connector terminal B9 and the ALDL terminal B. Is the repair complete?	-	Go to "Diagnostic System Check"	-
11	Replace the electronic control module. Is the repair complete?	-	Go to "Diagnostic System Check"	-

FUEL SYSTEM PRESSURE TEST
(Except Euro Stage-II)

Circuit Description

The fuel pump is an intank fuel pump mounted to a fuel sender assembly. The fuel pump will remain on as long as the engine is cranking or running and the electronic control module (ECM) is receiving reference pulses from the crankshaft position sensor (CPS). If there are no reference pulses, the ECM will turn off the fuel pump two seconds after the ignition switch is turned ON or two seconds after the engine stops running. The fuel pump delivers fuel to the fuel rail and the fuel injectors, where the fuel system pressure is controlled from 284 to 325 kPa (41 to 47 psi) by the fuel pressure regulator. The excess fuel is returned to the fuel tank.

Test Description

The number(s) below refer to step(s) on the diagnostic table.

2. When the engine is idling, the intake manifold vacuum is high. This vacuum is applied to the fuel pressure regulator diaphragm, offsetting the spring pressure inside the fuel pressure regulator and lowering the fuel pressure.
10. If there is fuel bleeding back through the fuel return outlet, this is due to a faulty fuel pressure regulator.
14. Another symptom often present when the fuel injectors are leaking is hard starting. Leaking fuel injectors can cause a flooding condition.
23. Fuel leaking from the fuel pump inlet is due to a faulty one-way check valve in the fuel pump.

Caution: The fuel system is under pressure. To avoid fuel spillage and the risk of personal injury or fire, it is necessary to relieve the fuel system pressure before disconnecting the fuel lines.

Caution: Do not pinch or restrict nylon fuel lines. Damage to the lines could cause a fuel leak, resulting in possible fire or personal injury.

Fuel Pressure Relief Procedure

1. Remove the fuel cap.
2. Remove the fuel pump fuse EF19 from the engine fuse box.
3. Start the engine and allow the engine to stall.
4. Crank the engine for an additional 10 seconds.

Fuel System Pressure Test

Step	Action	Value(s)	Yes	No
1	1. Relieve the fuel system pressure. 2. Install a fuel pressure gauge. 3. Turn the ignition ON. Is the fuel pressure within the values specified and holding steady?	284-325 kPa (41-47 psi)	Go to *Step 2*	Go to *Step 5*
2	1. Disconnect the fuel pressure regulator vacuum hose. 2. Start the engine. 3. Allow the engine to idle. 4. Connect the fuel pressure regulator vacuum hose. Did the fuel pressure decrease?	-	System OK	Go to *Step 3*
3	1. Allow the engine to idle. 2. Disconnect the vacuum hose from the fuel pressure regulator. 3. Connect a vacuum pump with a gauge to the fuel pressure regulator vacuum port. 4. Apply 41-47 kPa (12-14 in. Hg) of vacuum to the fuel pressure regulator. Did the fuel pressure decrease?	-	Go to *Step 4*	Go to *Step 16*
4	1. Locate and correct the cause of the vacuum restriction to the fuel pressure regulator. 2. Confirm the operation of the fuel pressure regulator. Is the repair complete?	-	System OK	-

Fuel System Pressure Test (Cont'd)

Step	Action	Value(s)	Yes	No
5	1. Relieve the fuel system pressure. 2. Install a fuel pressure gauge. 3. Turn the ignition ON. Is the fuel pressure within the values specified but not holding steady?	284-325 kPa (41-47 psi)	Go to *Step 6*	Go to *Step 17*
6	Inspect the fuel lines for a leak. Is the problem found?	-	Go to *Step 7*	Go to *Step 8*
7	1. Replace the fuel line(s) as needed. 2. Install a fuel pressure gauge. 3. Turn the ignition ON. Is the fuel pressure within the values specified and holding steady?	284-325 kPa (41-47 psi)	System OK	-
8	1. Remove the fuel pump assembly. 2. With the fuel pump under pressure, inspect the fuel pump coupling hoses for leaking. Is the problem found?	-	Go to *Step 9*	Go to *Step 10*
9	1. Tighten or replace the fuel pump coupling hoses as needed. 2. Install a fuel pressure gauge. 3. Turn the ignition ON. Is the fuel pressure within the values specified and holding steady?	284-325 kPa (41-47 psi)	System OK	-
10	With the fuel system under pressure, inspect the fuel return outlet for leaking. Is the problem found?	-	Go to *Step 11*	Go to *Step 12*
11	1. Replace the fuel pressure regulator. 2. Install a fuel pressure gauge. 3. Turn the ignition ON. Is the fuel pressure within the values specified and holding steady?	284-325 kPa (41-47 psi)	System OK	-
12	With the fuel system under pressure, inspect the fuel inlet for leaking. Is the problem found?	-	Go to *Step 13*	Go to *Step 14*
13	1. Replace the fuel pump assembly. 2. Install a fuel pressure gauge. 3. Turn the ignition ON. Is the fuel pressure within the values specified and holding steady?	284-325 kPa (41-47 psi)	System OK	-
14	1. Remove the fuel rail and the fuel injectors as an assembly. 2. With the fuel system under pressure, inspect all of the fuel injectors for leaking. Is the problem found?	-	Go to *Step 15*	-
15	1. Replace the leaking fuel injector(s). 2. Install a fuel pressure gauge. 3. Turn the ignition ON. Is the fuel pressure within the values specified and holding steady?	284-325 kPa (41-47 psi)	System OK	-

Fuel System Pressure Test (Cont'd)

Step	Action	Value(s)	Yes	No
16	1. Replace the fuel pressure regulator. 2. Disconnect the fuel pressure regulator vacuum hose. 3. Start the engine. 4. Allow the engine to idle. 5. Connect the fuel pressure regulator vacuum hose. Did the fuel pressure decrease?	-	System OK	-
17	1. Relieve the fuel system pressure. 2. Install a fuel pressure gauge. 3. Turn the ignition ON. Is the fuel system pressure below the values specified and holding steady?	284-325 kPa (41-47 psi)	Go to *Step 13*	Go to *Step 18*
18	1. Relieve the fuel system pressure. 2. Install a fuel pressure gauge. 3. Turn the ignition ON. Is the fuel system pressure below the values specified and not holding steady?	284-325 kPa (41-47 psi)	Go to *Step 19*	-
19	Inspect the fuel lines for leaks. Is the problem found?	-	Go to *Step 7*	Go to *Step 20*
20	1. Remove the fuel pump assembly. 2. With the fuel pump under pressure, inspect the fuel pump coupling hoses for leaking. Is the problem found?	-	Go to *Step 9*	Go to *Step 21*
21	1. Remove the fuel pump assembly. 2. With the fuel system under pressure, inspect the fuel return outlet for leaking. Is the problem found?	-	Go to *Step 11*	Go to *Step 22*
22	1. Remove the fuel pump assembly. 2. With the fuel system under pressure, inspect the fuel inlet for leaking. Is the problem found?	-	Go to *Step 13*	Go to *Step 23*
23	1. Remove the fuel rail and the fuel injectors as an assembly. 2. With the fuel system under pressure, inspect all of the fuel injectors for leaking. Is the problem found?	-	Go to *Step 15*	Go to *Step 13*

BLANK

FUEL SYSTEM PRESSURE TEST (Euro Stage-II Only)

Circuit Description

The fuel pump is an intank fuel pump mounted to a fuel sender assembly. The fuel pump will remain on as long as the engine is cranking or running and the electronic control module (ECM) is receiving reference pulses from the crankshaft position sensor (CPS). The fuel pump delivers fuel to the fuel rail and the fuel injectors, where the fuel system pressure is controlled from 284 to 325 kPa (41 to 47 psi) by the fuel pressure regulator. The excess fuel is returned to the fuel tank.

Test Description

The number(s) below refer to step(s) on the diagnostic table.

2. When the engine is idling, the intake manifold vacuum is high. This vacuum is applied to the fuel pressure regulator diaphragm, offsetting the spring pressure inside the fuel pressure regulator and lowering the fuel pressure.
10. If there is fuel bleeding back through the fuel return outlet, this is due to a faulty fuel pressure regulator.
14. Another symptom often present when the fuel injectors are leaking is hard starting. Leaking fuel injectors can cause a flooding condition.
23. Fuel leaking from the fuel pump inlet is due to a faulty one-way check valve in the fuel pump.

Caution: The fuel system is under pressure. To avoid fuel spillage and the risk of personal injury or fire, it is necessary to relieve the fuel system pressure before disconnecting the fuel lines.

Caution: Do not pinch or restrict nylon fuel lines. Damage to the lines could cause a fuel leak, resulting in possible fire or personal injury.

Fuel Pressure Relief Procedure

1. Remove the fuel cap.
2. Remove the fuel pump fuse EF19 from the engine fuse box.
3. Start the engine and allow the engine to stall.
4. Crank the engine for an additional 10 seconds.

Fuel System Pressure Test

Step	Action	Value(s)	Yes	No
1	1. Relieve the fuel system pressure. 2. Install a fuel pressure gauge. 3. Start the engine. Is the fuel pressure within the values specified and holding steady?	284-325 kPa (41-47 psi)	Go to *Step 2*	Go to *Step 5*
2	1. Disconnect the fuel pressure regulator vacuum hose. 2. Allow the engine to idle. 3. Connect the fuel pressure regulator vacuum hose. Did the fuel pressure decrease?	-	System OK	Go to *Step 3*
3	1. Allow the engine to idle. 2. Disconnect the vacuum hose from the fuel pressure regulator. 3. Connect a vacuum pump with a gauge to the fuel pressure regulator vacuum port. 4. Apply 41-47 kPa (12-14 in. Hg) of vacuum to the fuel pressure regulator. Did the fuel pressure decrease?	-	Go to *Step 4*	Go to *Step 16*
4	1. Locate and correct the cause of the vacuum restriction to the fuel pressure regulator. 2. Confirm the operation of the fuel pressure regulator. Is the repair complete?	-	System OK	-

Fuel System Pressure Test (Cont'd)

Step	Action	Value(s)	Yes	No
5	1. Relieve the fuel system pressure. 2. Install a fuel pressure gauge. 3. Start the engine. Is the fuel pressure within the values specified but not holding steady?	284-325 kPa (41-47 psi)	Go to *Step 6*	Go to *Step 17*
6	Inspect the fuel lines for a leak. Is the problem found?	-	Go to *Step 7*	Go to *Step 8*
7	1. Replace the fuel line(s) as needed. 2. Install a fuel pressure gauge. 3. Start the engine. Is the fuel pressure within the values specified and holding steady?	284-325 kPa (41-47 psi)	System OK	-
8	1. Remove the fuel pump assembly. 2. With the fuel pump under pressure, inspect the fuel pump coupling hoses for leaking. Is the problem found?	-	Go to *Step 9*	Go to *Step 10*
9	1. Tighten or replace the fuel pump coupling hoses as needed. 2. Install a fuel pressure gauge. 3. Start the engine. Is the fuel pressure within the values specified and holding steady?	284-325 kPa (41-47 psi)	System OK	-
10	With the fuel system under pressure, inspect the fuel return outlet for leaking. Is the problem found?	-	Go to *Step 11*	Go to *Step 12*
11	1. Replace the fuel pressure regulator. 2. Install a fuel pressure gauge. 3. Start the engine. Is the fuel pressure within the values specified and holding steady?	284-325 kPa (41-47 psi)	System OK	-
12	With the fuel system under pressure, inspect the fuel inlet for leaking. Is the problem found?	-	Go to *Step 13*	Go to *Step 14*
13	1. Replace the fuel pump assembly. 2. Install a fuel pressure gauge. 3. Start the engine. Is the fuel pressure within the values specified and holding steady?	284-325 kPa (41-47 psi)	System OK	-
14	1. Remove the fuel rail and the fuel injectors as an assembly. 2. With the fuel system under pressure, inspect all of the fuel injectors for leaking. Is the problem found?	-	Go to *Step 15*	-
15	1. Replace the leaking fuel injector(s). 2. Install a fuel pressure gauge. 3. Start the engine. Is the fuel pressure within the values specified and holding steady?	284-325 kPa (41-47 psi)	System OK	-

Fuel System Pressure Test (Cont'd)

Step	Action	Value(s)	Yes	No
16	1. Replace the fuel pressure regulator. 2. Disconnect the fuel pressure regulator vacuum hose. 3. Start the engine. 4. Allow the engine to idle. 5. Connect the fuel pressure regulator vacuum hose. Did the fuel pressure decrease?	-	System OK	-
17	1. Relieve the fuel system pressure. 2. Install a fuel pressure gauge. 3. Start the engine. Is the fuel system pressure below the values specified and holding steady?	284-325 kPa (41-47 psi)	Go to *Step 13*	Go to *Step 18*
18	1. Relieve the fuel system pressure. 2. Install a fuel pressure gauge. 3. Start the engine. Is the fuel system pressure below the values specified and not holding steady?	284-325 kPa (41-47 psi)	Go to *Step 19*	-
19	Inspect the fuel lines for leaks. Is the problem found?	-	Go to *Step 7*	Go to *Step 20*
20	1. Remove the fuel pump assembly. 2. With the fuel pump under pressure, inspect the fuel pump coupling hoses for leaking. Is the problem found?	-	Go to *Step 9*	Go to *Step 21*
21	1. Remove the fuel pump assembly. 2. With the fuel system under pressure, inspect the fuel return outlet for leaking. Is the problem found?	-	Go to *Step 11*	Go to *Step 22*
22	1. Remove the fuel pump assembly. 2. With the fuel system under pressure, inspect the fuel inlet for leaking. Is the problem found?	-	Go to *Step 13*	Go to *Step 23*
23	1. Remove the fuel rail and the fuel injectors as an assembly. 2. With the fuel system under pressure, inspect all of the fuel injectors for leaking. Is the problem found?	-	Go to *Step 15*	Go to *Step 13*

BLANK

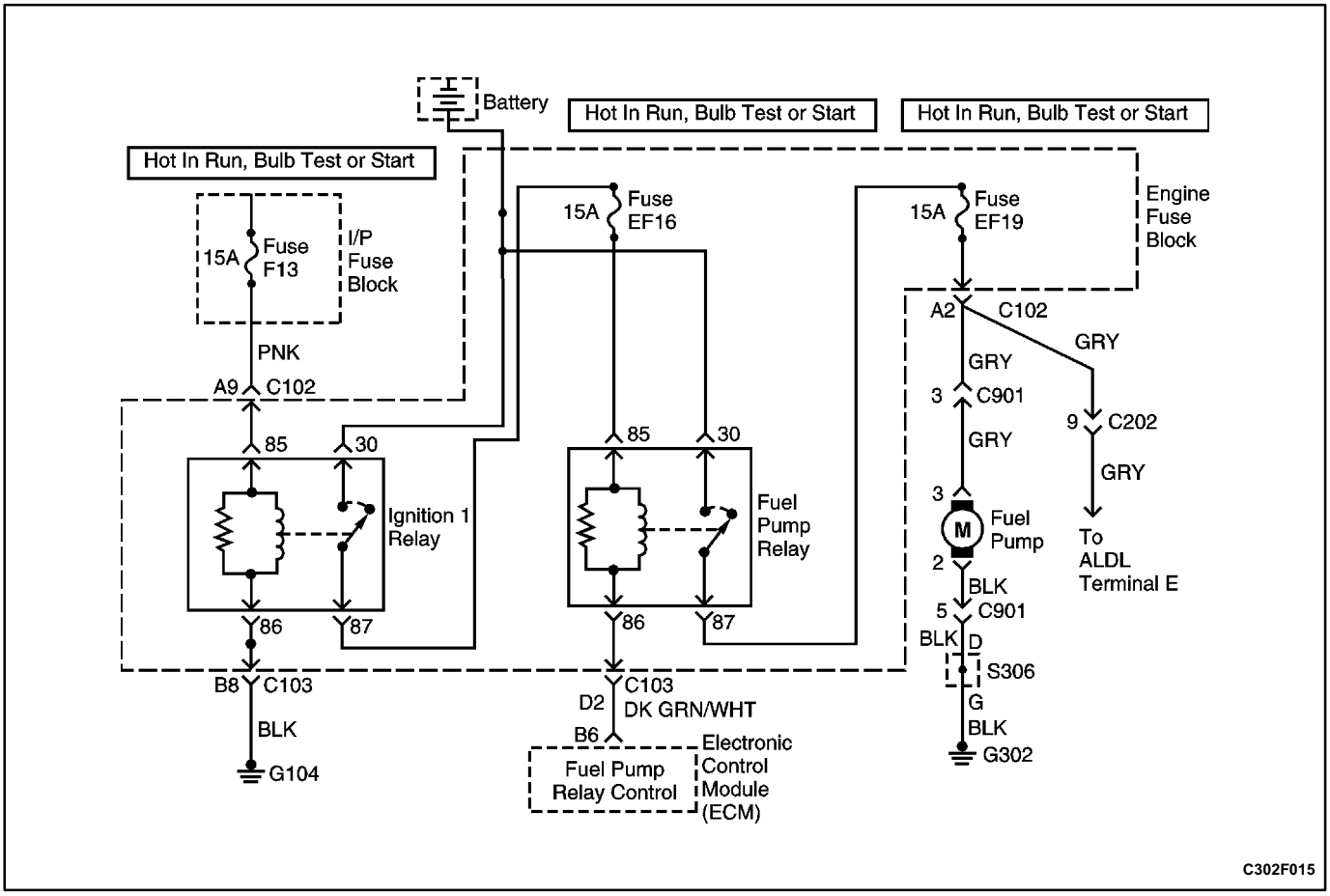

FUEL PUMP RELAY CIRCUIT CHECK (2.0L SOHC)

Circuit Description

When the ignition switch is turned ON, the electronic control module (ECM) will activate the fuel pump relay and run the intank fuel pump. The fuel pump will operate as long as the engine is cranking or running and the ECM is receiving ignition reference pulses.

If there are no reference pulses, the ECM will shut off the fuel pump within 2 seconds after the ignition switch is turned ON.

Diagnostic Aids

An intermittent problem may be caused by a poor connection, rubbed through wire insulation, or a broken wire inside the insulation.

Test Description

The number(s) below refer to step(s) on the diagnostic table.

3. This step checks for the electronic control module (ECM) providing a ground for the operation of the fuel pump relay.
7. By confirming that the wiring is OK using steps 2 through 6, it can be determined that the fuel pump relay is at fault.
8. If there is no voltage present at the fuel pump relay connector terminal 85, the problem is an open engine fuse block fuse EF16, an open in the wiring between the fuel pump relay and the ignition 1 relay, or a fault is present in the ignition 1 relay circuit.
9. After determining that there is no ground being provided by the ECM to the fuel pump relay, the fault is either the ECM or the wiring between the ECM and the fuel pump relay.

Fuel Pump Relay Circuit Check (2.0L SOHC)

Step	Action	Value(s)	Yes	No
1	1. Turn the ignition OFF for 10 seconds. 2. Turn the ignition ON. 3. Listen for in tank fuel pump operation. Does the fuel pump operate for the time specified?	2 sec	System OK	Go to *Step 2*
2	1. Turn the ignition OFF. 2. Disconnect the fuel pump relay. 3. Connect a test light between the fuel pump relay connector terminal 85 and ground. 4. Turn the ignition ON. Is the test light on?	-	Go to *Step 3*	Go to *Step 8*
3	1. Turn the ignition OFF. 2. Connect a test light between the fuel pump relay connector terminal 86 and battery positive. 3. Turn the ignition ON. 4. With the ignition ON, the test light should light for the time specified. Is the test light on?	2 sec	Go to *Step 4*	Go to *Step 9*
4	1. Turn the ignition OFF. 2. Connect a test light between the fuel pump relay connector terminal 30 and ground. Is the test light on?	-	Go to *Step 5*	Go to *Step 11*
5	Check for an open or short to ground in the wire between the fuel pump relay connector terminal 87 and the fuel pump connector terminal 3. Is the problem found?	-	Go to *Step 6*	Go to *Step 7*
6	1. Repair the wire between the fuel pump relay connector terminal 87 and the fuel pump connector terminal 3. 2. Install the fuel pump relay. 3. Turn the ignition OFF for 10 seconds. 4. Turn the ignition ON. Does the fuel pump operate for the time specified?	2 sec	System OK	-
7	1. Replace the fuel pump relay. 2. Turn the ignition OFF for 10 seconds. 3. Turn the ignition ON. Does the fuel pump operate for the time specified?	2 sec	System OK	-
8	Check for an open wire between the fuel pump relay connector terminal 85 and the ignition 1 relay connector terminal 87. Is the problem found?	-	Go to *Step 13*	Go to "Ignition 1 Relay Circuit Check"
9	Check for an open wire between the fuel pump relay connector terminal 86 to the ECM connector terminal B6. Is the problem found?	-	Go to *Step 10*	Go to *Step 12*
10	1. Repair the wire between the fuel pump relay connector terminal 86 to the ECM connector terminal B6. 2. Install the fuel pump relay. 3. Turn the ignition OFF for 10 seconds. 4. Turn the ignition ON. Does the fuel pump operate for the time specified?	2 sec	System OK	-

Fuel Pump Relay Circuit Check (2.0L SOHC) (Cont'd)

Step	Action	Value(s)	Yes	No
11	1. Repair the wire between the fuel pump relay connector terminal 30 and the battery. 2. Install the fuel pump relay. 3. Turn the ignition OFF for 10 seconds. 4. Turn the ignition ON. Does the fuel pump operate for the time specified?	2 sec	System OK	-
12	1. Replace the electronic control module. 2. Turn the ignition OFF for 10 seconds. 3. Turn the ignition ON. Does the fuel pump operate for the time specified?	2 sec	System OK	-
13	Repair the wire between the fuel pump relay connector terminal 85 and the battery. Is the repair complete?	-	System OK	-

BLANK

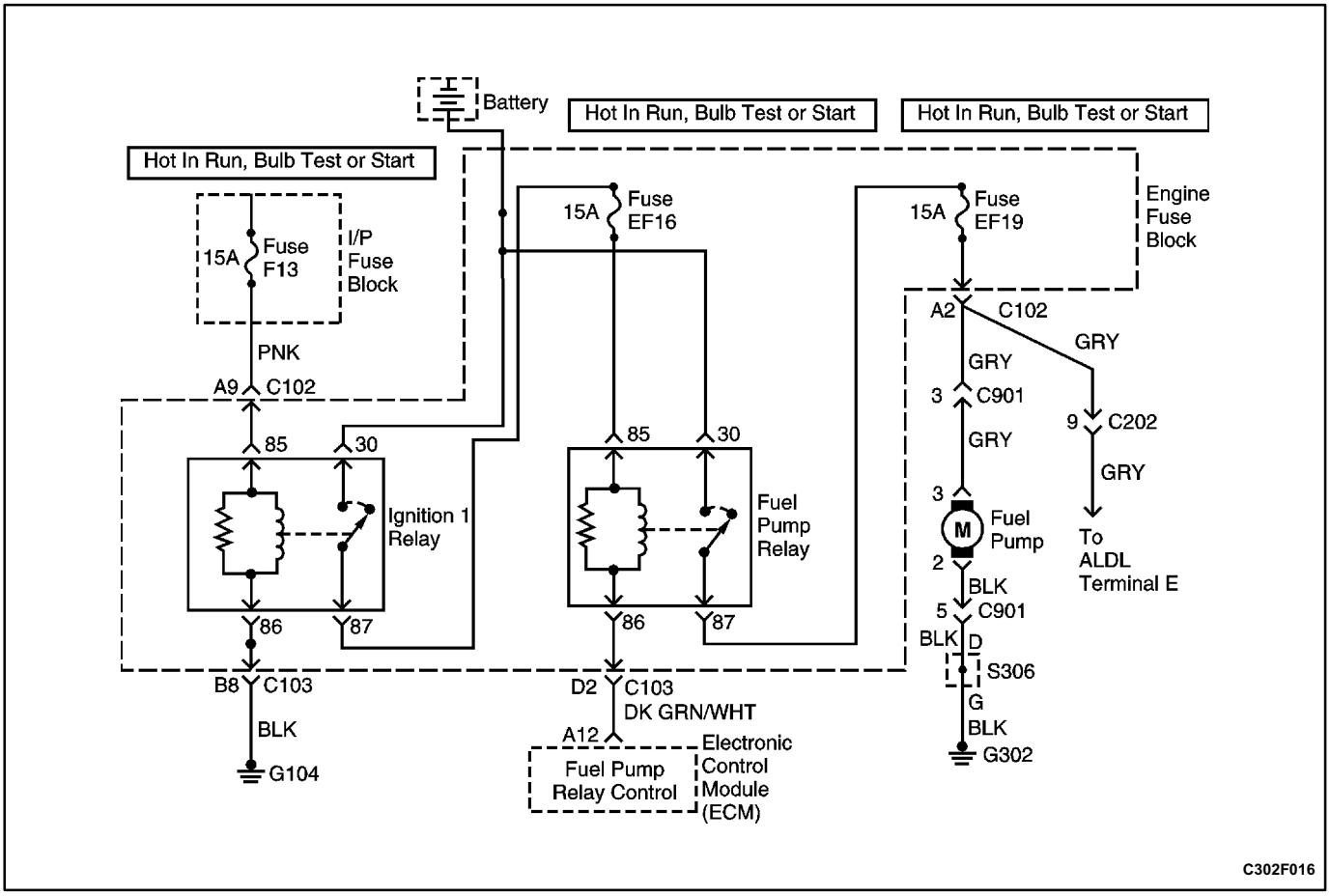

FUEL PUMP RELAY CIRCUIT CHECK (2.0L DOHC) (Except Euro Stage-II)

Circuit Description

When the ignition switch is turned ON, the electronic control module (ECM) will activate the fuel pump relay and run the in tank fuel pump. The fuel pump will operate as long as the engine is cranking or running and the ECM is receiving ignition reference pulses.

If there are no reference pulses, the ECM will shut off the fuel pump within 2 seconds after the ignition switch is turned ON.

Diagnostic Aids

An intermittent problem may be caused by a poor connection, rubbed through wire insulation, or a broken wire inside the insulation.

Test Description

The number(s) below refer to step(s) on the diagnostic table.

3. This step checks for the electronic control module (ECM) providing a ground for the operation of the fuel pump relay.
7. By confirming that the wiring is OK using steps 2 through 6, it can be determined that the fuel pump relay is at fault.
8. If there is no voltage present at the fuel pump relay connector terminal 85, the problem is an open engine fuse block fuse EF16, an open in the wiring between the fuel pump relay and the ignition 1 relay, or a fault is present in the ignition 1 relay circuit.
9. After determining that there is no ground being provided by the ECM to the fuel pump relay, the fault is either the ECM or the wiring between the ECM and the fuel pump relay.

Fuel Pump Relay Circuit Check (2.0L DOHC)

Step	Action	Value(s)	Yes	No
1	1. Turn the ignition OFF for 10 seconds. 2. Turn the ignition ON. 3. Listen for in tank fuel pump operation. Does the fuel pump operate for the time specified?	2 sec	System OK	Go to *Step 2*
2	1. Turn the ignition OFF. 2. Disconnect the fuel pump relay. 3. Connect a test light between the fuel pump relay connector terminal 85 and ground. 4. Turn the ignition ON. Is the test light on?	-	Go to *Step 3*	Go to *Step 8*
3	1. Turn the ignition OFF. 2. Connect a test light between the fuel pump relay connector terminal 86 and battery positive. 3. Turn the ignition ON. 4. With the ignition ON, the test light should light for the time specified. Is the test light on?	2 sec	Go to *Step 4*	Go to *Step 9*
4	1. Turn the ignition OFF. 2. Connect a test light between the fuel pump relay connector terminal 30 and ground. Is the test light on?	-	Go to *Step 5*	Go to *Step 11*
5	Check for an open or short to ground in the wire between the fuel pump relay connector terminal 87 and the fuel pump connector terminal 3. Is the problem found?	-	Go to *Step 6*	Go to *Step 7*
6	1. Repair the wire between the fuel pump relay connector terminal 87 and the fuel pump connector terminal 3. 2. Install the fuel pump relay. 3. Turn the ignition OFF for 10 seconds. 4. Turn the ignition ON. Does the fuel pump operate for the time specified?	2 sec	System OK	-
7	1. Replace the fuel pump relay. 2. Turn the ignition OFF for 10 seconds. 3. Turn the ignition ON. Does the fuel pump operate for the time specified?	2 sec	System OK	-
8	Check for an open wire between the fuel pump relay connector terminal 85 and the ignition 1 relay connector terminal 87. Is the problem found?	-	Go to *Step 13*	Go to "Ignition 1 Relay Circuit Check"
9	Check for an open wire between the fuel pump relay connector terminal 86 to the ECM connector terminal A12. Is the problem found?	-	Go to *Step 10*	Go to *Step 12*
10	1. Repair the wire between the fuel pump relay connector terminal 86 to the ECM connector terminal A12. 2. Install the fuel pump relay. 3. Turn the ignition OFF for 10 seconds. 4. Turn the ignition ON. Does the fuel pump operate for the time specified?	2 sec	System OK	-

Fuel Pump Relay Circuit Check (2.0L DOHC) (Cont'd)

Step	Action	Value(s)	Yes	No
11	1. Repair the wire between the fuel pump relay connector terminal 30 and the battery. 2. Install the fuel pump relay. 3. Turn the ignition OFF for 10 seconds. 4. Turn the ignition ON. Does the fuel pump operate for the time specified?	2 sec	System OK	-
12	1. Replace the electronic control module. 2. Turn the ignition OFF for 10 seconds. 3. Turn the ignition ON. Does the fuel pump operate for the time specified?	2 sec	System OK	-
13	Repair the wire between the fuel pump relay connector terminal 85 and the battery. Is the repair complete?	-	System OK	-

BLANK

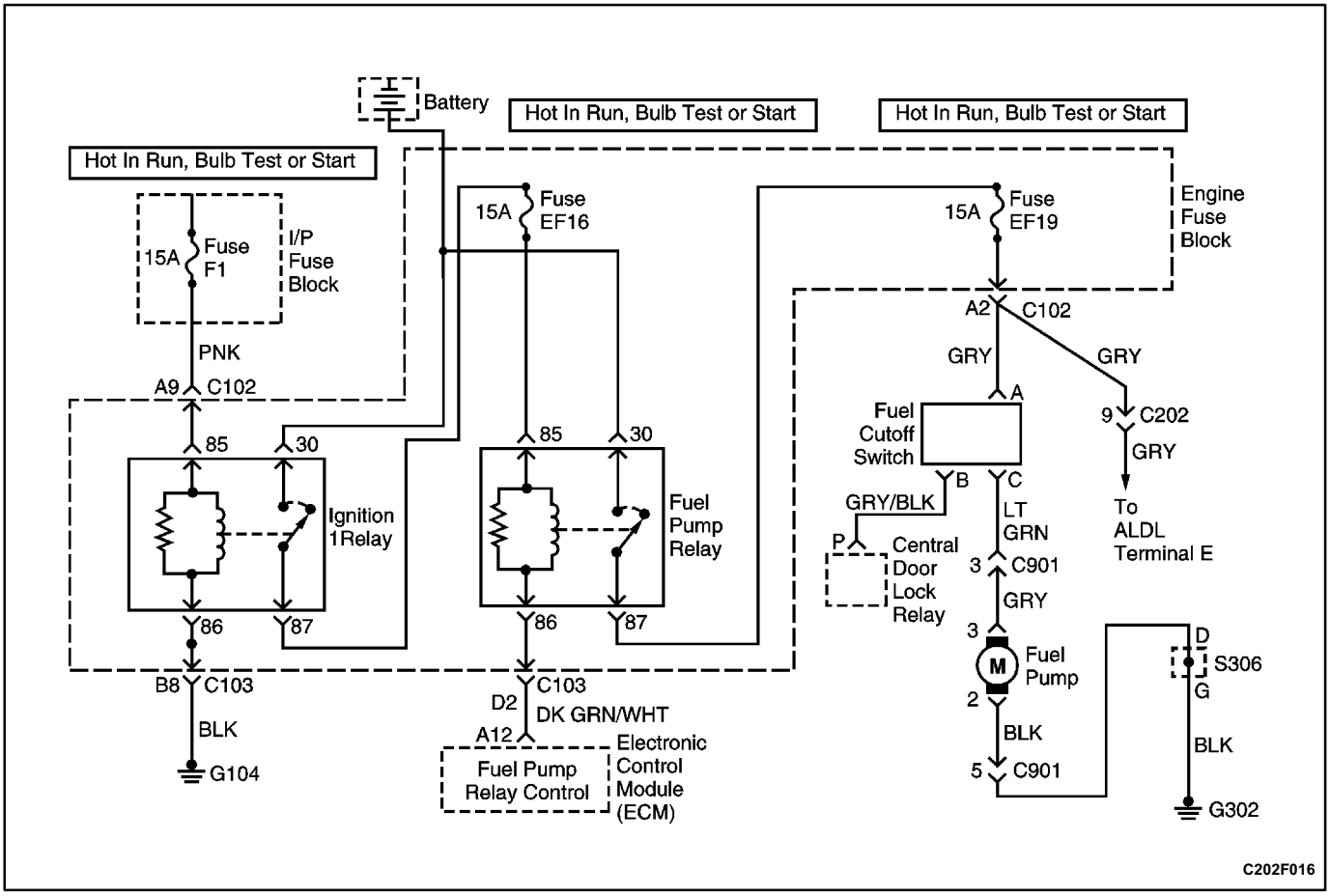

FUEL PUMP RELAY CIRCUIT CHECK (2.0L DOHC) (Euro Stage-II Only)

Circuit Description

When the engine started, the electronic control module (ECM) will activate the fuel pump relay and run the in-tank fuel pump. The fuel pump will operate as long as the engine is cranking or running and the ECM is receiving ignition reference pulses.

If there are no reference pulses, the ECM will shut off the fuel pump.

Diagnostic Aids

An intermittent problem may be caused by a poor connection, rubbed through wire insulation, or a broken wire inside the insulation.

Test Description

The number(s) below refer to step(s) on the diagnostic table.

3. This step checks for the electronic control module (ECM) providing a ground for the operation of the fuel pump relay.
7. By confirming that the wiring is OK using steps 2 through 6, it can be determined that the fuel pump relay is at fault.
8. If there is no voltage present at the fuel pump relay connector terminal 85, the problem is an open engine fuse block fuse EF16, an open in the wiring between the fuel pump relay and the ignition 1 relay, or a fault is present in the ignition 1 relay circuit.
9. After determining that there is no ground being provided by the ECM to the fuel pump relay, the fault is either the ECM or the wiring between the ECM and the fuel pump relay.

Fuel Pump Relay Circuit Check (2.0L DOHC)

Step	Action	Value(s)	Yes	No
1	1. Turn the ignition OFF for 10 seconds. 2. Start the engine. Does the the engine started?	-	System OK	Go to *Step 2*
2	1. Turn the ignition OFF. 2. Disconnect the fuel pump relay. 3. Connect a test light between the fuel pump relay connector terminal 85 and ground. 4. Turn the ignition ON. Is the test light on?	-	Go to *Step 3*	Go to *Step 8*
3	1. Turn the ignition OFF. 2. Connect a test light between the fuel pump relay connector terminal 86 and battery positive. 3. Start the engine. 4. The test light should light while cranking. Is the test light on?	-	Go to *Step 4*	Go to *Step 9*
4	1. Turn the ignition OFF. 2. Connect a test light between the fuel pump relay connector terminal 30 and ground. Is the test light on?	-	Go to *Step 5*	Go to *Step 11*
5	Check for an open or short to ground in the wire between the fuel pump relay connector terminal 87 and the fuel pump connector terminal 3. Is the problem found?	-	Go to *Step 6*	Go to *Step 7*
6	1. Repair the wire between the fuel pump relay connector terminal 87 and the fuel pump connector terminal 3. 2. Install the fuel pump relay. 3. Turn the ignition OFF for 10 seconds. 4. Start the engine. Does the engine started?	-	System OK	-
7	1. Replace the fuel pump relay. 2. Turn the ignition OFF for 10 seconds. 3. Start the engine. Does the engine started?	-	System OK	-
8	Check for an open wire between the fuel pump relay connector terminal 85 and the ignition 1 relay connector terminal 87. Is the problem found?	-	Go to *Step 13*	Go to "Ignition 1 Relay Circuit Check"
9	Check for an open wire between the fuel pump relay connector terminal 86 to the ECM connector terminal A12. Is the problem found?	-	Go to *Step 10*	Go to *Step 12*
10	1. Repair the wire between the fuel pump relay connector terminal 86 to the ECM connector terminal A12. 2. Install the fuel pump relay. 3. Turn the ignition OFF for 10 seconds. 4. Start the engine. Does the engine started?	-	System OK	-

Fuel Pump Relay Circuit Check (2.0L DOHC) (Cont'd)

Step	Action	Value(s)	Yes	No
11	1. Repair the wire between the fuel pump relay connector terminal 30 and the battery. 2. Install the fuel pump relay. 3. Turn the ignition OFF for 10 seconds. 4. Start the engine. Does the engine started?	-	System OK	-
12	1. Replace the electronic control module. 2. Turn the ignition OFF for 10 seconds. 3. Start the engine. Does the engine started?	-	System OK	-
13	Repair the wire between the fuel pump relay connector terminal 85 and the battery. Is the repair complete?	-	System OK	-

BLANK

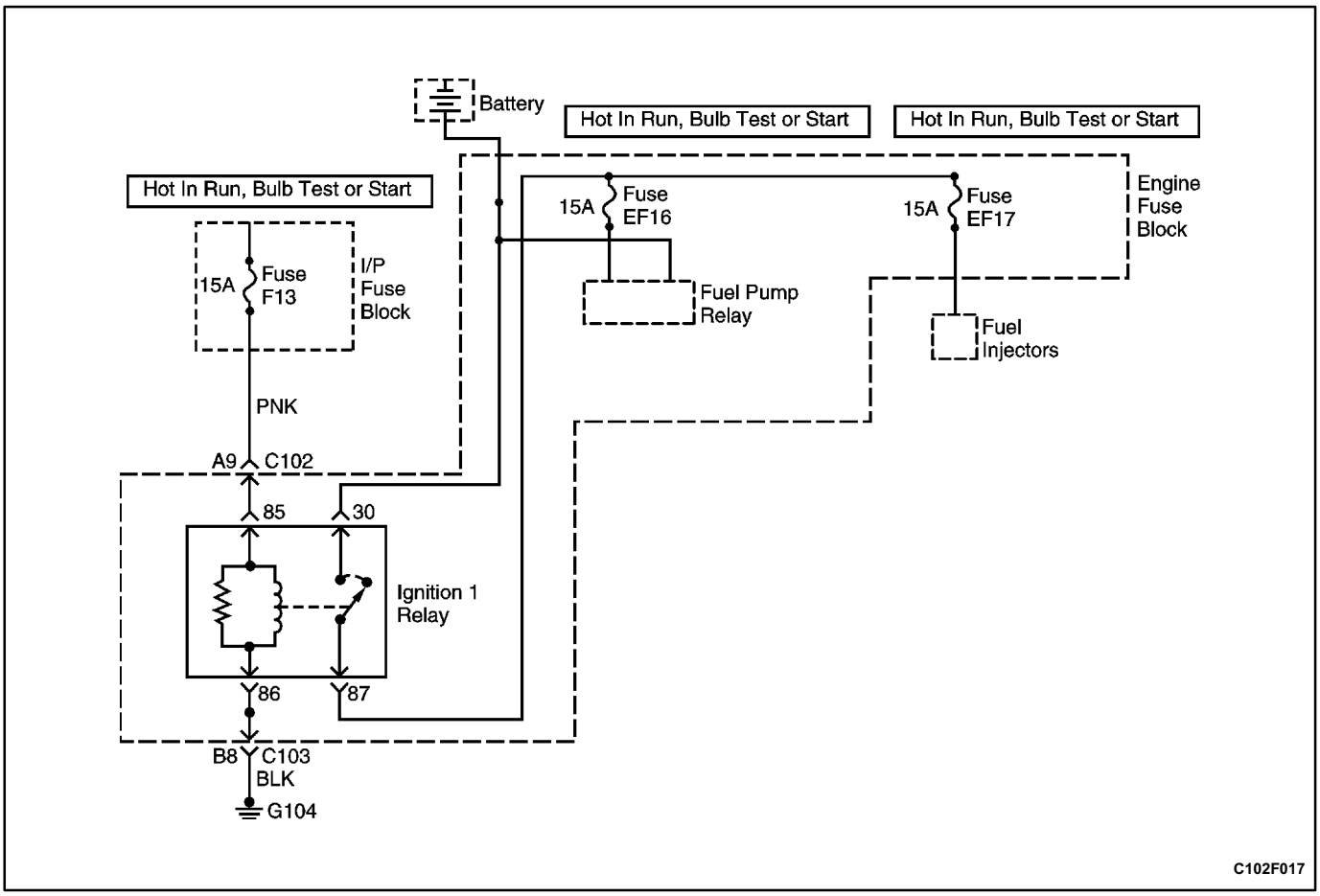

IGNITION 1 RELAY CIRCUIT CHECK

Circuit Description

When the ignition is turned ON or to the START position, the ignition 1 relay is energized. The ignition 1 relay then supplies voltage to the engine fuse box fuse EF16 and the engine fuse box fuse EF17. The direct ignition system ignition coil, the fuel pump relay (coil side), and the controlled canister purge solenoid are supplied voltage through the engine fuse box fuse EF16. The fuel injectors are supplied voltage through the engine fuse box fuse EF17.

Diagnostic Aids

- An intermittent problem may be caused by a poor connection, rubbed through wire insulation, or a broken wire inside the insulation.
- A faulty ignition 1 relay will cause a no start condition. There will be no voltage supplied to the direct ignition system ignition coil, the fuel pump relay (coil side), or the fuel injectors. Without voltage supplied to these components, they will not operate.

Test Description

The number(s) below refer to specific step(s) on the diagnostic table.

1. If the test light is on at both of the fuse terminals, the ignition 1 relay is OK.
5. This step, along with steps 6, 7, and 8, checks for correct voltage and ground to the ignition 1 relay terminals.
14. After confirming correct voltage and ground to the ignition 1 relay terminals, it can be determined that the ignition 1 relay is faulty.

Ignition 1 Relay Circuit Check

Step	Action	Value(s)	Yes	No
1	1. Turn the ignition OFF. 2. Disconnect the engine fuse block fuses EF16 and EF17. 3. Turn the ignition ON. 4. With a test light connected to ground, probe the fuse terminals nearest the ignition 1 relay for fuses EF16 and EF17. Is the test light on at both terminals?	-	System OK	Go to *Step 2*
2	Check the test light. Is the test light on at only one terminal?	-	Go to *Step 9*	Go to *Step 3*
3	Check the test light. Is the test light off at both terminals?	-	Go to *Step 4*	-
4	1. Turn the ignition OFF. 2. Inspect the instrument panel fuse block fuse F13. Is the fuse OK?	-	Go to *Step 5*	Go to *Step 10*
5	1. Disconnect the ignition 1 relay. 2. Connect a test light between the ignition 1 relay connector terminal 85 and ground. 3. Turn the ignition ON. Is the test light on?	-	Go to *Step 6*	Go to *Step 11*
6	Connect a test light between the ignition 1 relay connector terminal 86 and battery voltage. Is the test light on?	-	Go to *Step 7*	Go to *Step 12*
7	Connect a test light between the ignition 1 relay connector terminal 30 and ground. Is the test light on?	-	Go to *Step 8*	Go to *Step 13*
8	Check for an open in the wiring between the ignition 1 relay connector terminal 87 and the engine fuse block terminals for fuses EF16 and EF17. Is the problem found?	-	Go to *Step 9*	Go to *Step 14*
9	Repair the open in the wiring between the ignition 1 relay connector terminal 87 and the engine fuse block terminal(s) for fuses EF16 and/or EF17. Is the repair complete?	-	System OK	-
10	Replace the instrument panel fuse block fuse F13. Is the repair complete?	-	System OK	-
11	Repair the open in the wiring between the ignition 1 relay connector terminal 85 and the ignition switch. Is the repair complete?	-	System OK	-
12	Repair the open in the wiring between the ignition 1 relay connector terminal 86 and ground. Is the repair complete?	-	System OK	-
13	Repair the open in the wiring between the ignition 1 relay connector terminal 30 and the battery. Is the repair complete?	-	System OK	-
14	Replace the ignition 1 relay. Is the repair complete?	-	System OK	-

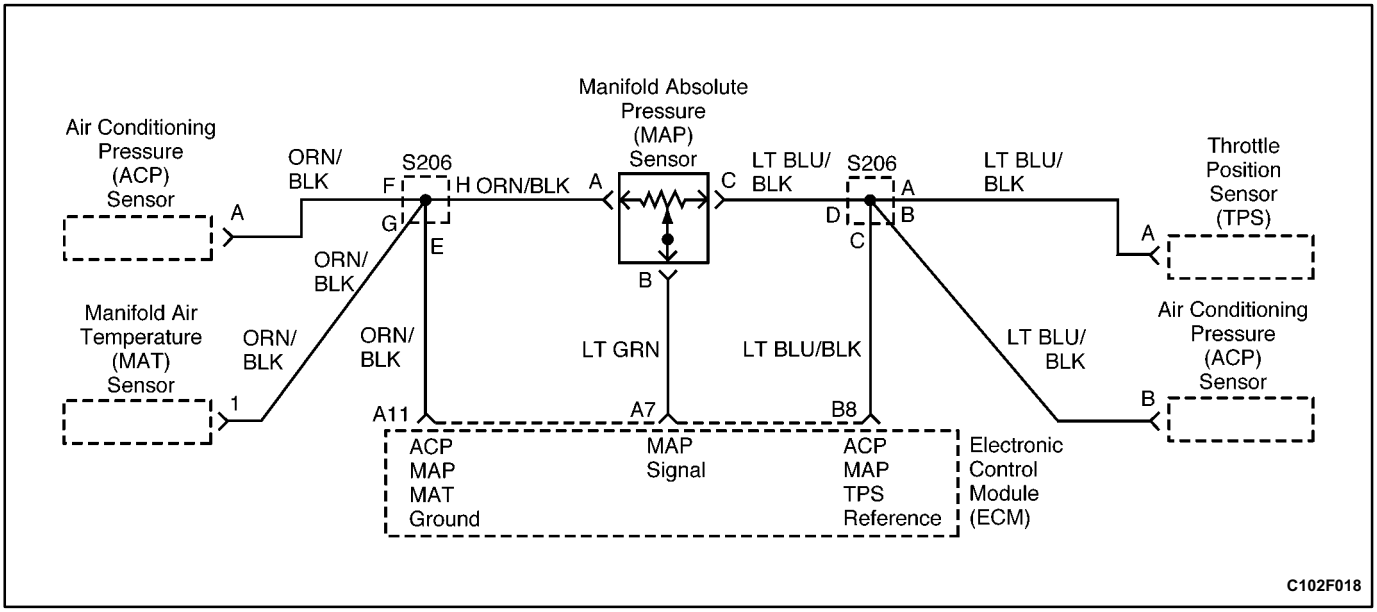

MANIFOLD ABSOLUTE PRESSURE CHECK (2.0L SOHC)

Circuit Description

The manifold absolute pressure (MAP) sensor measures the changes in the intake manifold pressure which result from engine load (intake manifold vacuum) and rpm changes. The MAP sensor converts these changes into a voltage output. The electronic control module (ECM) sends a 5 volt reference voltage to the MAP sensor. As the intake manifold pressure changes, the output voltage of the MAP sensor also changes. A low voltage (high vacuum) output of 1 to 2 volts is present at idle. A high voltage (low vacuum) output of 4.0 to 4.8 volts is present at wide open throttle. The MAP sensor is also used under certain conditions to measure barometric pressure. This allows the ECM to make adjustments for altitude changes. The ECM uses the MAP sensor for fuel delivery and ignition timing changes.

Test Description

The number(s) below refer to step(s) on the diagnostic table.

2. Applying 34 kPa (10 inches Hg) of vacuum to the manifold absolute pressure (MAP) sensor should cause the voltage to change. Subtract the second voltage reading from the first. That voltage value should be more than 1.5 volts. When applying vacuum to the MAP sensor, the change in the voltage should happen instantly. A slow voltage change indicates a faulty MAP sensor.
3. Disconnect the MAP sensor from the bracket and twist the MAP sensor. Output changes more than 0.1 volt indicate a faulty connector or connection.

Manifold Absolute Pressure Check (2.0L SOHC)

Step	Action	Value(s)	Yes	No
1	1. Turn the ignition OFF. 2. Connect a scan tool to the assembly line diagnostic link (ALDL). 3. Turn the ignition ON. 4. Compare the manifold absolute pressure (MAP) sensor voltage reading from the scanner with that from a known good vehicle. Is the difference in the two voltage readings less than the value specified?	0.4 V	Go to *Step 2*	Go to *Step 5*
2	1. Turn the ignition OFF. 2. Connect a scan tool to the ALDL. 3. Disconnect the MAP sensor vacuum line. 4. Connect a hand vacuum pump to the MAP sensor. 5. Turn the ignition ON. 6. Note the MAP sensor voltage. 7. Apply 34 kPa (10 in. Hg) of vacuum to the MAP sensor and note the voltage change. Is the difference in voltage readings more than the value specified?	1.5 V	System OK	Go to *Step 3*
3	Inspect the MAP sensor connector terminals. Is the problem found?	-	Go to *Step 4*	Go to *Step 5*
4	Repair the MAP sensor connector terminals as needed. Is the repair complete?	-	System OK	-
5	Replace the manifold absolute pressure sensor. Is the repair complete?	-	System OK	-

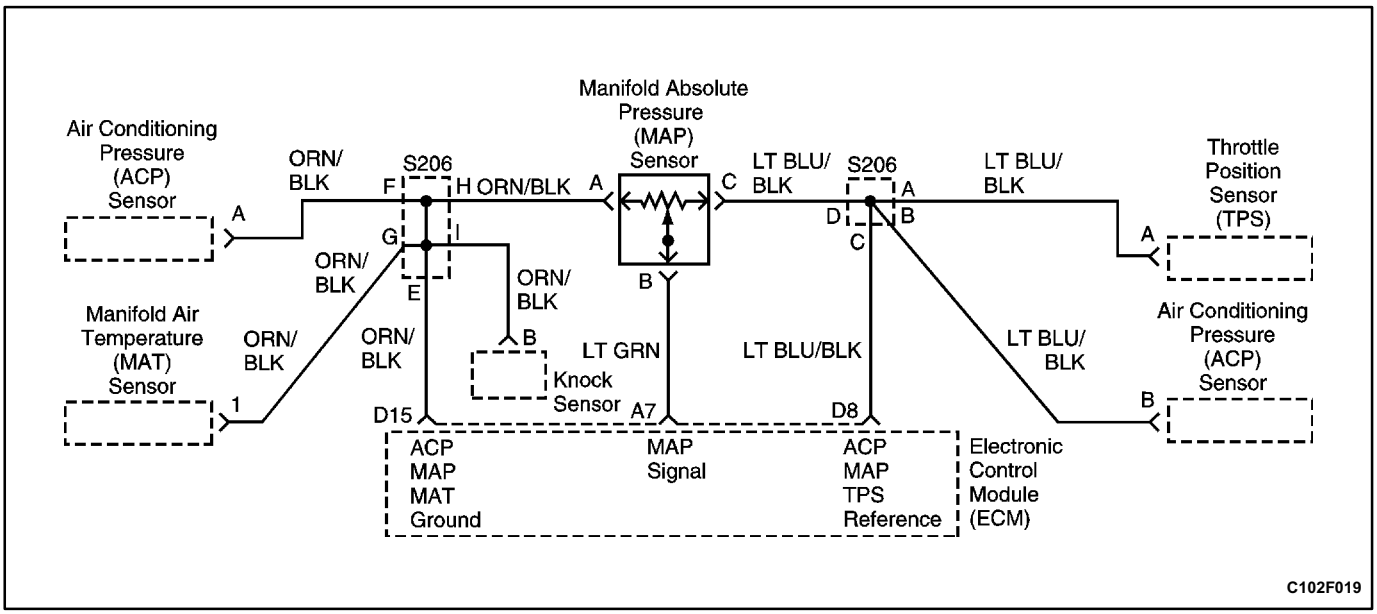

MANIFOLD ABSOLUTE PRESSURE CHECK (2.0L DOHC)

Circuit Description

The manifold absolute pressure (MAP) sensor measures the changes in the intake manifold pressure which result from engine load (intake manifold vacuum) and rpm changes. The MAP sensor converts these changes into a voltage output. The electronic control module (ECM) sends a 5 volt reference voltage to the MAP sensor. As the intake manifold pressure changes, the output voltage of the MAP sensor also changes. A low voltage (high vacuum) output of 1 to 2 volts is present at idle. A high voltage (low vacuum) output of 4.0 to 4.8 volts is present at wide open throttle. The MAP sensor is also used under certain conditions to measure barometric pressure. This allows the ECM to make adjustments for altitude changes. The ECM uses the MAP sensor for fuel delivery and ignition timing changes.

Test Description

The number(s) below refer to step(s) on the diagnostic table.

2. Applying 34 kPa (10 inches Hg) of vacuum to the manifold absolute pressure (MAP) sensor should cause the voltage to change. Subtract the second voltage reading from the first. That voltage value should be more than 1.5 volts. When applying vacuum to the MAP sensor, the change in the voltage should happen instantly. A slow voltage change indicates a faulty MAP sensor.
3. Disconnect the MAP sensor from the intake manifold and twist the MAP sensor. Output changes more than 0.1 volt indicate a faulty connector or connection.

Manifold Absolute Pressure Check (2.0L DOHC)

Step	Action	Value(s)	Yes	No
1	1. Turn the ignition OFF. 2. Connect a scan tool to the assembly line diagnostic link (ALDL). 3. Turn the ignition ON. 4. Compare the manifold absolute pressure (MAP) sensor voltage reading from the scanner with that from a known good vehicle. Is the difference in the two voltage readings less than the value specified?	0.4 V	Go to *Step 2*	Go to *Step 5*
2	1. Turn the ignition OFF. 2. Connect a scan tool to the ALDL. 3. Disconnect the MAP sensor vacuum line. 4. Connect a hand vacuum pump to the MAP sensor. 5. Turn the ignition ON. 6. Note the MAP sensor voltage. 7. Apply 34 kPa (10 in. Hg) of vacuum to the MAP sensor and note the voltage change. Is the difference in voltage readings more than the value specified?	1.5 V	System OK	Go to *Step 3*
3	Inspect the MAP sensor connector terminals. Is the problem found?	-	Go to *Step 4*	Go to *Step 5*
4	Repair the MAP sensor connector terminals as needed. Is the repair complete?	-	System OK	-
5	Replace the manifold absolute pressure sensor. Is the repair complete?	-	System OK	-

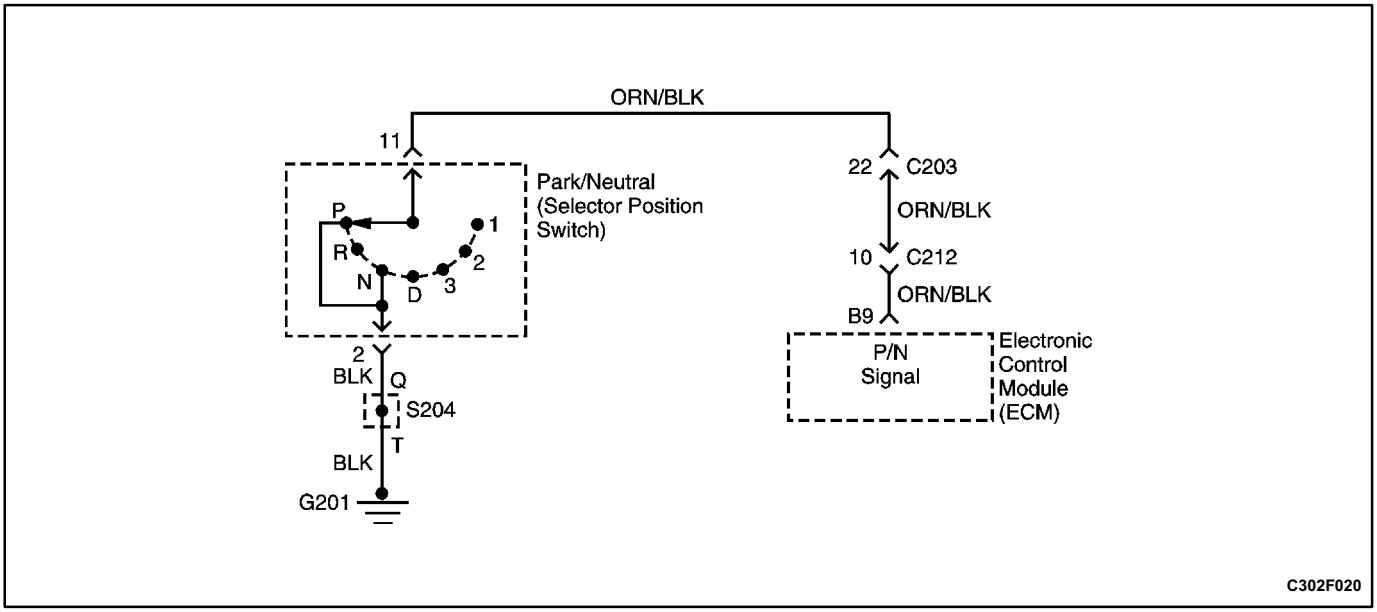

PARK/NEUTRAL SWITCH (2.0L SOHC)

Circuit Description

The park/neutral (P/N) switch contacts are a part of the selector position switch. The contacts are closed to ground in park and neutral and open in the drive ranges.

The electronic control module (ECM) supplies ignition voltage through a current limiting resistor to the signal wire and senses a closed switch when the voltage on the signal wire drops to less than 1 volt. The ECM uses the P/N signal as one of the inputs to control idle air and spark timing.

Test Description

The number(s) below refer to step(s) on the diagnostic table.

1. Checks for the park/neutral (P/N) switch closed to ground in the park position. Different makes of scan tools will read park/neutral differently. Refer to the tool operations manual for the type of display used.
2. Checks for an open P/N switch in the drive range.

Park/Neutral Switch (2.0L SOHC)

Step	Action	Value(s)	Yes	No
1	1. Connect a scan tool to the assembly line diagnostic link (ALDL). 2. Place the transaxle in P (Park). 3. Turn the ignition ON. Does the scan tool indicate park or neutral?	-	Go to *Step 2*	Go to *Step 10*
2	Place the transaxle in D (Drive). Does the scan tool indicate drive?	-	System OK	Go to *Step 3*
3	Disconnect the park/neutral (P/N) switch. Does the scan tool indicate drive?	-	Go to *Step 4*	Go to *Step 7*
4	Check the P/N switch adjustment. Is the problem found?	-	Go to *Step 5*	Go to *Step 6*
5	Adjust the P/N switch. Is the repair complete?	-	System OK	-
6	Replace the P/N switch. Is the repair complete?	-	System OK	-
7	Check for an open or short to ground in the wire between the P/N switch connector terminal 11 and the ECM connector terminal B9. Is the problem found?	-	Go to *Step 8*	Go to *Step 9*
8	Repair the open or short to ground in the wire between the P/N switch connector terminal 11 and the ECM connector terminal B9. Is the repair complete?	-	System OK	-
9	Replace the electronic control module. Is the repair complete?	-	System OK	-
10	1. Disconnect the P/N switch. 2. Jumper the P/N switch connector terminals 11 and 2. 3. Turn the ignition ON. Does the scan tool indicate park?	-	Go to *Step 4*	Go to *Step 11*
11	Jumper the P/N switch connector terminal 11 to ground. Does the scan tool indicate park?	-	Go to *Step 12*	Go to *Step 7*
12	Repair the open wire between the P/N switch connector terminal 2 and ground. Is the repair complete?	-	System OK	-

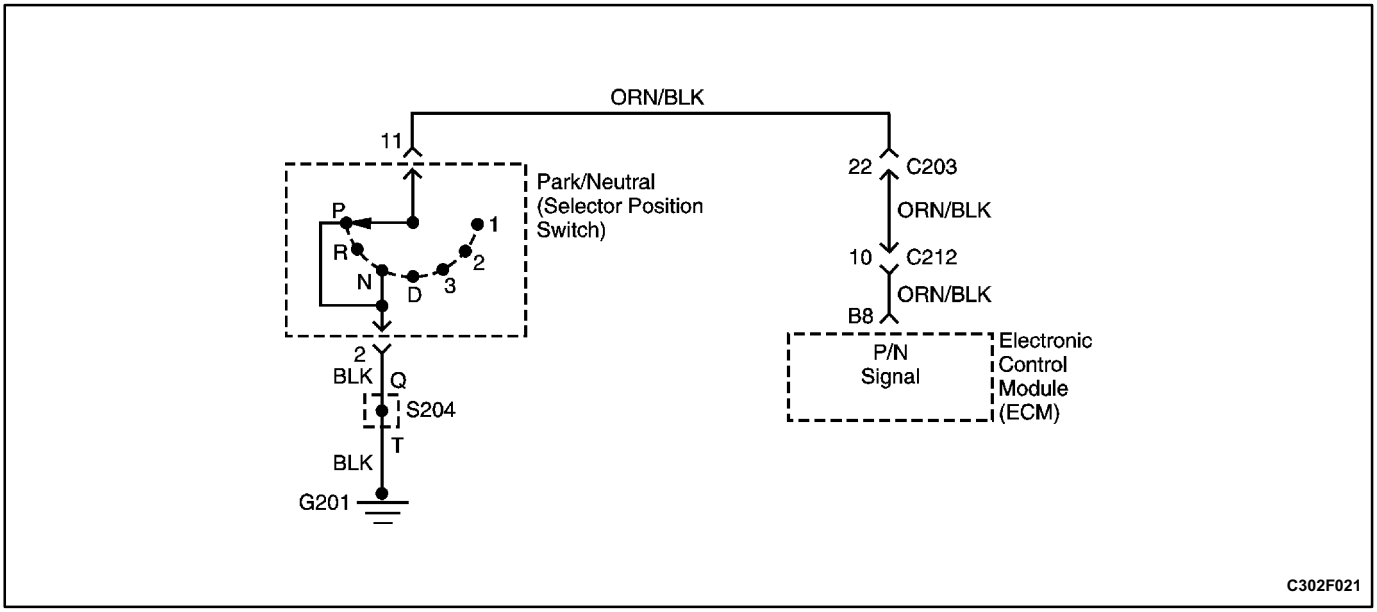

PARK/NEUTRAL SWITCH (2.0L DOHC)

Circuit Description

The park/neutral (P/N) switch contacts are a part of the selector position switch. The contacts are closed to ground in park and neutral and open in the drive ranges.

The electronic control module (ECM) supplies ignition voltage through a current limiting resistor to the signal wire and senses a closed switch when the voltage on the signal wire drops to less than 1 volt. The ECM uses the P/N signal as one of the inputs to control idle air and spark timing.

Test Description

The number(s) below refer to step(s) on the diagnostic table.

1. Checks for the park/neutral (P/N) switch closed to ground in the park position. Different makes of scan tools will read park/neutral differently. Refer to the tool operations manual for the type of display used.
2. Checks for an open P/N switch in the drive range.

Park/Neutral Switch (2.0L DOHC)

Step	Action	Value(s)	Yes	No
1	1. Connect a scan tool to the assembly line diagnostic link (ALDL). 2. Place the transaxle in P (Park). 3. Turn the ignition ON. Does the scan tool indicate park or neutral?	-	Go to *Step 2*	Go to *Step 10*
2	Place the transaxle in D (Drive). Does the scan tool indicate drive?	-	System OK	Go to *Step 3*
3	Disconnect the park/neutral (P/N) switch. Does the scan tool indicate drive?	-	Go to *Step 4*	Go to *Step 7*
4	Check the P/N switch adjustment. Is the problem found?	-	Go to *Step 5*	Go to *Step 6*
5	Adjust the P/N switch. Is the repair complete?	-	System OK	-
6	Replace the P/N switch. Is the repair complete?	-	System OK	-
7	Check for an open or short to ground in the wire between the P/N switch connector terminal 11 and the ECM connector terminal B9. Is the problem found?	-	Go to *Step 8*	Go to *Step 9*
8	Repair the open or short to ground in the wire between the P/N switch connector terminal 11 and the ECM connector terminal B9. Is the repair complete?	-	System OK	-
9	Replace the electronic control module. Is the repair complete?	-	System OK	-
10	1. Disconnect the P/N switch. 2. Jumper the P/N switch connector terminals 11 and 2. 3. Turn the ignition ON. Does the scan tool indicate park?	-	Go to *Step 4*	Go to *Step 11*
11	Jumper the P/N switch connector terminal 11 to ground. Does the scan tool indicate park?	-	Go to *Step 12*	Go to *Step 7*
12	Repair the open wire between the P/N switch connector terminal 2 and ground. Is the repair complete?	-	System OK	-

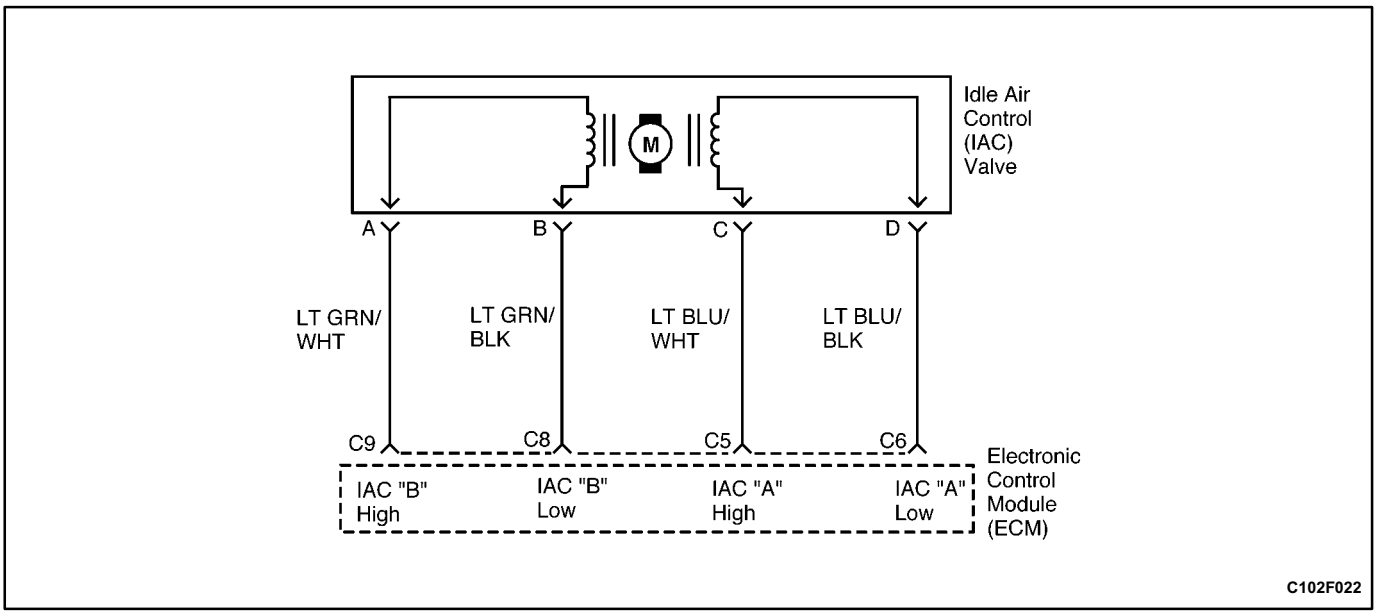

IDLE AIR CONTROL SYSTEM CHECK (2.0L SOHC)

Circuit Description

The electronic control module (ECM) controls the engine idle speed with the idle air control (IAC) valve. To increase the idle speed, the ECM pulls the IAC pintle away from its seat, allowing more air to pass by the throttle bore. To decrease the idle speed, it extends the IAC valve pintle toward its seat, reducing bypass air flow. A scan tool will read the ECM commands to the IAC valve in counts. The higher counts indicate more air bypass (higher idle). The lower counts indicate less air is allowed to bypass (lower idle).

Diagnostic Aids

If the idle is too high, stop the engine. Fully extend the idle air control (IAC) valve with a IAC tester. Start the engine. If the idle speed is above 800 rpm, locate and repair the vacuum leak. Also, check for a binding throttle plate or throttle linkage or an incorrect base idle setting.

Test Description

The number(s) below refer to step(s) on the diagnostic table.

2. The idle air control (IAC) valve is extended and retracted by the IAC driver. IAC valve movement is verified by an engine speed change. If no change in engine speed occurs, the valve can be removed from the throttle body and tested. Connect the IAC driver to the removed IAC valve and turn the ignition ON. Do not start the engine.

5. This step checks the quality of the IAC valve movement in step 2. Fully extending the IAC valve may cause an engine stall. This may be normal.

6. Steps 2 and 5 verify proper IAC valve operation. This step checks the IAC circuit for a wiring or electronic control module (ECM) fault.

Idle Air Control Valve Reset Procedure

Whenever the battery cable or the electronic control module (ECM) connector or the ECM fuse EF22 is disconnected (more than 10 seconds) or replaced the following idle learn procedure must be performed:

1. Turn the ignition ON for 5 seconds.
2. Turn the ignition OFF for 10 seconds.
3. Turn the ignition ON for 5 seconds.
4. Start the engine in park/neutral.
5. Allow the engine to run until the engine coolant is above 85°C (185°F).
6. Turn the A/C ON for 10 seconds, if equipped.
7. Turn the A/C OFF for 10 seconds, if equipped.
8. If the vehicle is equipped with an automatic transaxle, apply the parking brake. While depressing the brake pedal, place the transaxle in D (drive).
9. Turn the A/C ON for 10 seconds, if equipped.
10. Turn the A/C OFF for 10 seconds, if equipped.
11. Turn the ignition OFF. The idle learn procedure is complete.

Idle Air Control System Check (2.0L SOHC)

Step	Action	Value(s)	Yes	No
1	Was the Diagnostic System Check performed?	-	Go to *Step 2*	Go to "Diagnostic System Check"
2	1. Turn the ignition OFF. 2. Connect the idle air control driver to the idle air control (IAC) valve. 3. Connect a scan tool to the assembly line diagnostic link (ALDL). 4. Start the engine. 5. With the IAC driver, extend and retract the IAC valve. Engine rpm should increase and decrease as the IAC valve is cycled. Does the engine rpm change?	-	Go to *Step 5*	Go to *Step 3*
3	1. Remove the IAC valve. 2. Inspect the IAC passages for restrictions. Is the problem found?	-	Go to *Step 4*	Go to *Step 19*
4	Clean the IAC passages. Is the repair complete?	-	System OK	-
5	1. Turn the ignition OFF. 2. Start the engine. 3. Using the IAC driver, extend and retract the IAC valve. Engine rpm should increase and decrease as the IAC valve is cycled. Does the rpm change smoothly within the value specified with each flash of the IAC driver?	700-1500 rpm	Go to *Step 6*	Go to *Step 3*
6	1. Turn the ignition OFF. 2. Connect the IAC driver to the IAC valve. 3. Install an IAC node light to the IAC valve connector. 4. Start the engine. 5. Cycle the IAC driver. 6. Watch the node lights of the IAC driver. Do both lights cycle red and green but never off as the rpm is changed?	-	Go to *Step 7*	Go to *Step 9*
7	1. Measure the resistance of the IAC valve between terminals A and B. 2. Measure the resistance of the IAC valve between terminals C and D. Does the resistance measure within the value specified?	40-80 Ω	Go to *Step 8*	Go to *Step 19*
8	1. Measure the resistance of the IAC valve between terminals B and C. 2. Measure the resistance of the IAC valve between terminals A and D. Does the ohmmeter show the specified value?	∞	Go to "Diagnostic Aids"	Go to *Step 19*
9	Inspect the IAC connector terminals. Is the problem found?	-	Go to *Step 10*	Go to *Step 11*
10	Repair or replace the IAC connector terminals as needed. Is the repair complete?	-	System OK	-

Idle Air Control System Check (2.0L SOHC) (Cont'd)

Step	Action	Value(s)	Yes	No
11	Check for an open or short in the wire between the IAC connector terminal A and the electronic control module (ECM) connector terminal C9. Is the problem found?	-	Go to *Step 15*	Go to *Step 12*
12	Check for an open or short in the wire between the IAC connector terminal B and the electronic control module (ECM) connector terminal C8. Is the problem found?	-	Go to *Step 15*	Go to *Step 13*
13	Check for an open or short in the wire between the IAC connector terminal C and the electronic control module (ECM) connector terminal C5. Is the problem found?	-	Go to *Step 15*	Go to *Step 14*
14	Check for an open or short in the wire between the IAC connector terminal D and the electronic control module (ECM) connector terminal C6. Is the problem found?	-	Go to *Step 15*	Go to *Step 16*
15	Repair the wire as needed. Is the repair complete?	-	System OK	-
16	Inspect the ECM connector terminals. Is the problem found?	-	Go to *Step 17*	Go to *Step 18*
17	Repair the ECM connector terminals as needed. Is the repair complete?	-	System OK	-
18	Replace the electronic control module. Is the repair complete?	-	System OK	-
19	Replace the idle air control valve. Is the repair complete?	-	System OK	-

BLANK

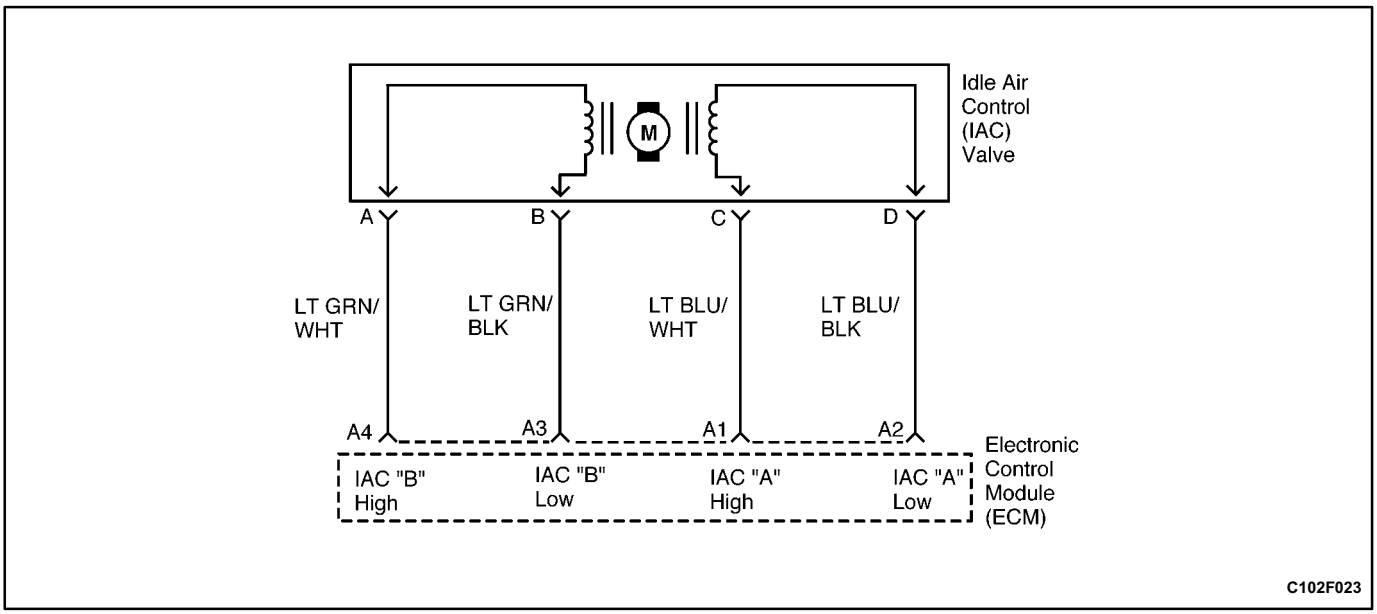

IDLE AIR CONTROL SYSTEM CHECK (2.0L DOHC)

Circuit Description

The electronic control module (ECM) controls the engine idle speed with the idle air control (IAC) valve. To increase the idle speed, the ECM pulls the IAC pintle away from its seat, allowing more air to pass by the throttle bore. To decrease the idle speed, it extends the IAC valve pintle toward its seat, reducing bypass air flow. A scan tool will read the ECM commands to the IAC valve in counts. The higher counts indicate more air bypass (higher idle). The lower counts indicate less air is allowed to bypass (lower idle).

Diagnostic Aids

If the idle is too high, stop the engine. Fully extend the idle air control (IAC) valve with a IAC tester. Start the engine. If the idle speed is above 800 rpm, locate and repair the vacuum leak. Also, check for a binding throttle plate or throttle linkage or an incorrect base idle setting.

Test Description

The number(s) below refer to step(s) on the diagnostic table.

2. The idle air control (IAC) valve is extended and retracted by the IAC driver. IAC valve movement is verified by an engine speed change. If no change in engine speed occurs, the valve can be removed from the throttle body and tested. Connect the IAC driver to the removed IAC valve and turn the ignition ON. Do not start the engine.

5. This step checks the quality of the IAC valve movement in step 2. Fully extending the IAC valve may cause an engine stall. This may be normal.

6. Steps 2 and 5 verify proper IAC valve operation. This step checks the IAC circuit for a wiring or electronic control module (ECM) fault.

Idle Air Control Valve Reset Procedure

Whenever the battery cable or the electronic control module (ECM) connector or the ECM fuse EF22 is disconnected (more than 10 seconds) or replaced the following idle learn procedure must be performed:

1. Turn the ignition ON for 5 seconds.
2. Turn the ignition OFF for 10 seconds.
3. Turn the ignition ON for 5 seconds.
4. Start the engine in park/neutral.
5. Allow the engine to run until the engine coolant is above 85°C (185°F).
6. Turn the A/C ON for 10 seconds, if equipped.
7. Turn the A/C OFF for 10 seconds, if equipped.
8. If the vehicle is equipped with an automatic transaxle, apply the parking brake. While depressing the brake pedal, place the transaxle in D (drive).
9. Turn the A/C ON for 10 seconds, if equipped.
10. Turn the A/C OFF for 10 seconds, if equipped.
11. Turn the ignition OFF. The idle learn procedure is complete.

Idle Air Control System Check (2.0L DOHC)

Step	Action	Value(s)	Yes	No
1	Was the Diagnostic System Check performed?	-	Go to *Step 2*	Go to "Diagnostic System Check"
2	1. Turn the ignition OFF. 2. Connect the idle air control driver to the idle air control (IAC) valve. 3. Connect a scan tool to the assembly line diagnostic link (ALDL). 4. Start the engine. 5. With the IAC driver, extend and retract the IAC valve. Engine rpm should increase and decrease as the IAC valve is cycled. Does the engine rpm change?	-	Go to *Step 5*	Go to *Step 3*
3	1. Remove the IAC valve. 2. Inspect the IAC passages for restrictions. Is the problem found?	-	Go to *Step 4*	Go to *Step 19*
4	Clean the IAC passages. Is the repair complete?	-	System OK	-
5	1. Turn the ignition OFF. 2. Start the engine. 3. Using the IAC driver, extend and retract the IAC valve. Engine rpm should increase and decrease as the IAC valve is cycled. Does the rpm change smoothly within the value specified with each flash of the IAC driver?	700-1500 rpm	Go to *Step 6*	Go to *Step 3*
6	1. Turn the ignition OFF. 2. Connect the IAC driver to the IAC valve. 3. Install an IAC node light to the IAC valve connector. 4. Start the engine. 5. Cycle the IAC driver. 6. Watch the node lights of the IAC driver. Do both lights cycle red and green but never off as the rpm is changed?	-	Go to *Step 7*	Go to *Step 9*
7	1. Measure the resistance of the IAC valve between terminals A and B. 2. Measure the resistance of the IAC valve between terminals C and D. Does the resistance measure within the value specified?	40-80 Ω	Go to *Step 8*	Go to *Step 19*
8	1. Measure the resistance of the IAC valve between terminals B and C. 2. Measure the resistance of the IAC valve between terminals A and D. Does the ohmmeter show the specified value?	∞	Go to "Diagnostic Aids"	Go to *Step 19*
9	Inspect the IAC connector terminals. Is the problem found?	-	Go to *Step 10*	Go to *Step 11*
10	Repair or replace the IAC connector terminals as needed. Is the repair complete?	-	System OK	-

Idle Air Control System Check (2.0L DOHC) (Cont'd)

Step	Action	Value(s)	Yes	No
11	Check for an open or short in the wire between the IAC connector terminal A and the electronic control module (ECM) connector terminal A4. Is the problem found?	-	Go to *Step 15*	Go to *Step 12*
12	Check for an open or short in the wire between the IAC connector terminal B and the electronic control module (ECM) connector terminal A3. Is the problem found?	-	Go to *Step 15*	Go to *Step 13*
13	Check for an open or short in the wire between the IAC connector terminal C and the electronic control module (ECM) connector terminal A1. Is the problem found?	-	Go to *Step 15*	Go to *Step 14*
14	Check for an open or short in the wire between the IAC connector terminal D and the electronic control module (ECM) connector terminal A2. Is the problem found?	-	Go to *Step 15*	Go to *Step 16*
15	Repair the wire as needed. Is the repair complete?	-	System OK	-
16	Inspect the ECM connector terminals. Is the problem found?	-	Go to *Step 17*	Go to *Step 18*
17	Repair the ECM connector terminals as needed. Is the repair complete?	-	System OK	-
18	Replace the electronic control module. Is the repair complete?	-	System OK	-
19	Replace the idle air control valve. Is the repair complete?	-	System OK	-

BLANK

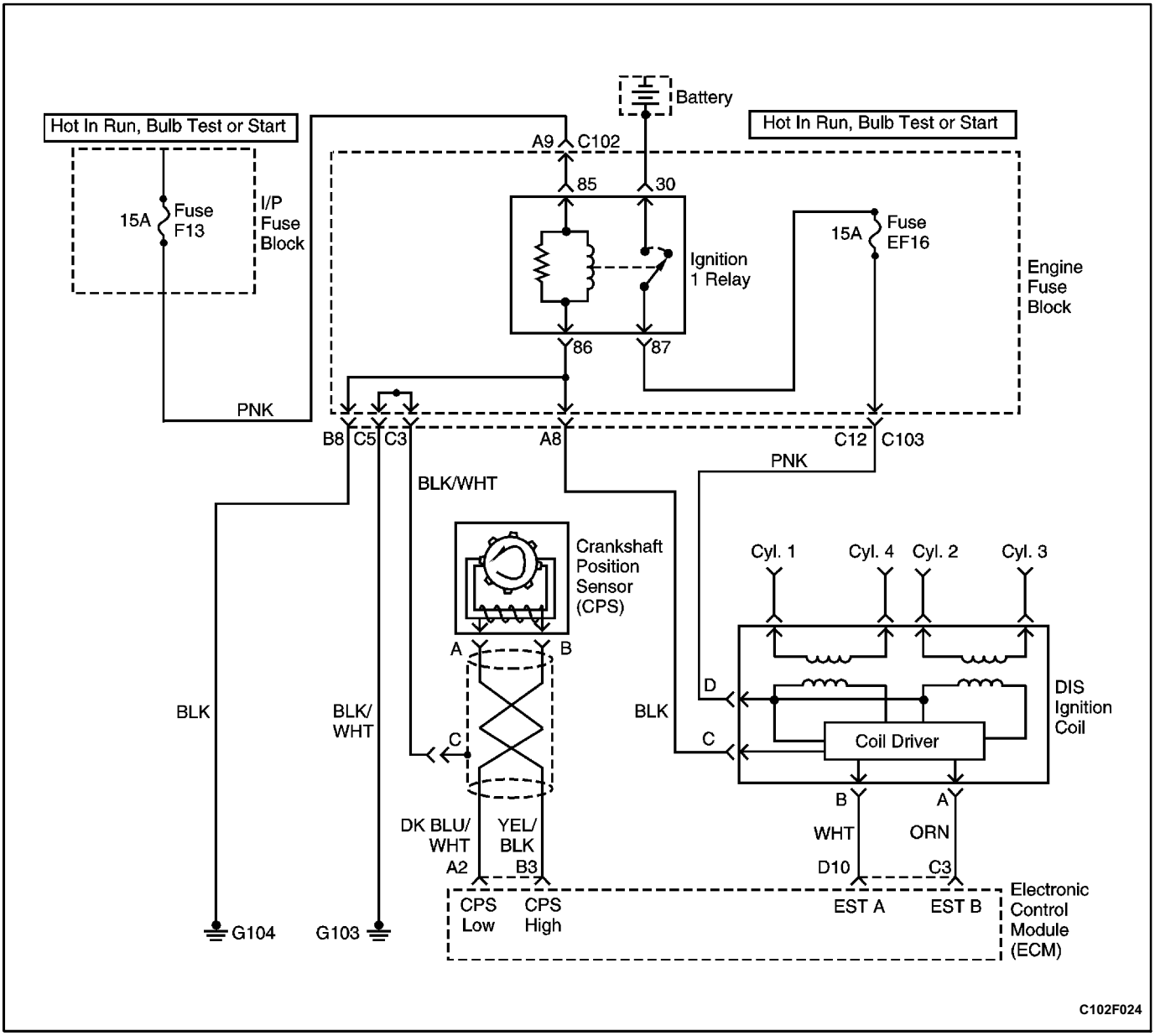

IGNITION SYSTEM CHECK (2.0L SOHC)

Circuit Description

The direct ignition system (DIS) uses a waste spark method of spark distribution. In this type of DIS system, the crankshaft position sensor (CPS) is mounted to the oil pump near a slotted wheel that is a part of the crankshaft pulley. The CPS sends reference pulses to the electronic control module (ECM). The ECM then triggers the DIS ignition coil. Once the ECM triggers the DIS ignition coil, both of the connected spark plugs fire at the same time. One cylinder is on its compression stroke at the same time that the other is on the exhaust stroke, resulting in lower energy needed to fire the spark plug in the cylinder on its exhaust stroke.

This leaves the remainder of the high voltage to be used to fire the spark plug in the cylinder on its compression stroke. Since the CPS is in a fixed position, timing adjustments are not possible or needed.

Test Description

The number(s) below refer to step(s) on the diagnostic table.

2. It is important to check for the presence of spark to all of the cylinders to isolate the problem to either direct ignition system (DIS) ignition coil inputs or outputs.

5. In checking the electronic control module (ECM) outputs for the electronic spark timing signal, it recommended to use an oscilloscope to view the varying voltage signals. In measuring these outputs with a voltmeter, intermittent errors may occur that cannot be seen by a voltmeter.
6. After confirming ECM inputs for the electronic spark timing to the DIS ignition coil are OK, it can be determined that a faulty DIS ignition coil is at fault.
11. After confirming proper crankshaft position sensor inputs to the ECM and no wiring problems present, it can be determined that the ECM is at fault.
24. This step, along with step 25, checks for battery voltage and a ground to the DIS ignition coil.
26. If the wiring between the DIS ignition coil and the ignition 1 relay connector terminal 87 is OK, the problem is in the ignition 1 relay circuit.

Ignition System Check (2.0L SOHC)

Step	Action	Value(s)	Yes	No
1	1. Remove the spark plugs. 2. Inspect for wet spark plugs, cracks, wear, improper gap, burned electrodes, or heavy deposits. 3. Replace the spark plugs as needed. Is the repair complete?	-	System OK	Go to *Step 2*
2	Check for the presence of spark from all of the ignition wires while cranking the engine. Is spark present from all of the ignition wires?	-	System OK	Go to *Step 3*
3	1. Measure the resistance of the ignition wires. 2. Replace any ignition wire(s) with a resistance above the value specified. 3. Check for the presence of spark from all of the ignition wires. Is spark present from all of the ignition wires?	30,000 Ω	System OK	Go to *Step 4*
4	Is spark present from at least one of the ignition wires, but not all of the ignition wires?	-	Go to *Step 5*	Go to *Step 12*
5	1. Turn the ignition OFF. 2. Disconnect the direct ignition system (DIS) ignition coil connector. 3. While cranking the engine, measure the voltage at the DIS ignition coil connector terminal B. Does the voltage fluctuate within the values specified?	0.2-2.0 V	Go to *Step 6*	Go to *Step 7*
6	While cranking the engine, measure the voltage at the DIS ignition coil connector terminal A. Does the voltage fluctuate within the values specified?	0.2-2.0 V	Go to *Step 10*	Go to *Step 8*
7	Check for an open in the wire from the DIS ignition coil connector terminal B to the electronic control module (ECM) connector terminal D10. Is the problem found?	-	Go to *Step 9*	Go to *Step 11*
8	Check for an open in the wire from the DIS ignition coil connector terminal A to the ECM connector terminal C3. Is the problem found?	-	Go to *Step 9*	Go to *Step 11*
9	1. Repair the wiring as needed. 2. Connect the DIS ignition coil connector. 3. Check for the presence of spark from all of the ignition wires. Is spark present from all of the ignition wires?	-	System OK	-

Ignition System Check (2.0L SOHC) (Cont'd)

Step	Action	Value(s)	Yes	No
10	1. Replace the direct ignition system ignition coil. 2. Connect the DIS ignition coil connector. 3. Check for the presence of spark from all of the ignition wires. Is spark present from all of the ignition wires?	-	System OK	-
11	1. Replace the electronic control module. 2. Connect the DIS ignition coil connector. 3. Check for the presence of spark from all of the ignition wires. Is spark present from all of the ignition wires?	-	System OK	-
12	1. Turn the ignition OFF. 2. Disconnect the crankshaft position sensor (CPS) connector. 3. Measure the resistance between the CPS terminals A and B. Is the resistance within the value specified?	400-600 Ω	Go to *Step 13*	Go to *Step 28*
13	1. Measure the resistance between the CPS terminals A and C. 2. Measure the resistance between the CPS terminals B and C. Is the resistance infinite (open circuit)?	-	Go to *Step 14*	Go to *Step 28*
14	1. Turn the ignition ON. 2. Measure the voltage between the CPS connector terminals A and C. Is the voltage within the value specified?	0.95-1.10 V	Go to *Step 20*	Go to *Step 15*
15	Measure the voltage between the CPS connector terminal A and ground. Is the voltage within the value specified?	0.95-1.10 V	Go to *Step 17*	Go to *Step 16*
16	Check the wire between the CPS connector terminal A and the ECM connector terminal A2 for an open or short. Is the problem found?	-	Go to *Step 18*	Go to *Step 11*
17	Check the wire between the CPS connector terminal C and ground for an open or short. Is the problem found?	-	Go to *Step 19*	Go to *Step 11*
18	Repair the wire between the CPS connector terminal A and the ECM connector terminal A2. Is the repair complete?	-	System OK	-
19	Repair the wire between the CPS connector terminal C and ground. Is the repair complete?	-	System OK	-
20	1. Turn the ignition ON. 2. Measure the voltage between the CPS connector terminals B and C. Is the voltage within the value specified?	0.95-1.10 V	Go to *Step 24*	Go to *Step 21*
21	Measure the voltage between the CPS connector terminal B and ground. Is the voltage within the value specified?	0.95-1.10 V	Go to *Step 17*	Go to *Step 22*

Ignition System Check (2.0L SOHC) (Cont'd)

Step	Action	Value(s)	Yes	No
22	Check the wire between the CPS connector terminal B and the ECM connector terminal B3 for an open or short. Is the problem found?	-	Go to *Step 23*	Go to *Step 11*
23	Repair the wire between the CPS connector terminal B and the ECM connector terminal B3. Is the repair complete?	-	System OK	-
24	1. Turn the ignition OFF. 2. Connect a test light between the DIS ignition coil connector terminal D and ground. 3. Turn the ignition ON. Is the test light on?	-	Go to *Step 25*	Go to *Step 26*
25	Connect a test light between the DIS ignition coil connector terminal C and battery positive. Is the test light on?	-	Go to *Step 5*	Go to *Step 27*
26	Check for an open in the wiring between the DIS ignition coil connector, terminal D and the ignition 1 relay connector terminal 87. Is the problem found?	-	Go to *Step 29*	Go to "Ignition 1 Relay Circuit Check"
27	Repair the wire between the DIS ignition coil connector terminal C and ground. Is the repair complete?	-	System OK	-
28	Replace the crankshaft position sensor. Is the repair complete?	-	System OK	-
29	Repair the open in the wiring between the DIS ignition coil connector terminal D and the ignition 1 relay connector terminal 87. Is the repair complete?	-	System OK	-

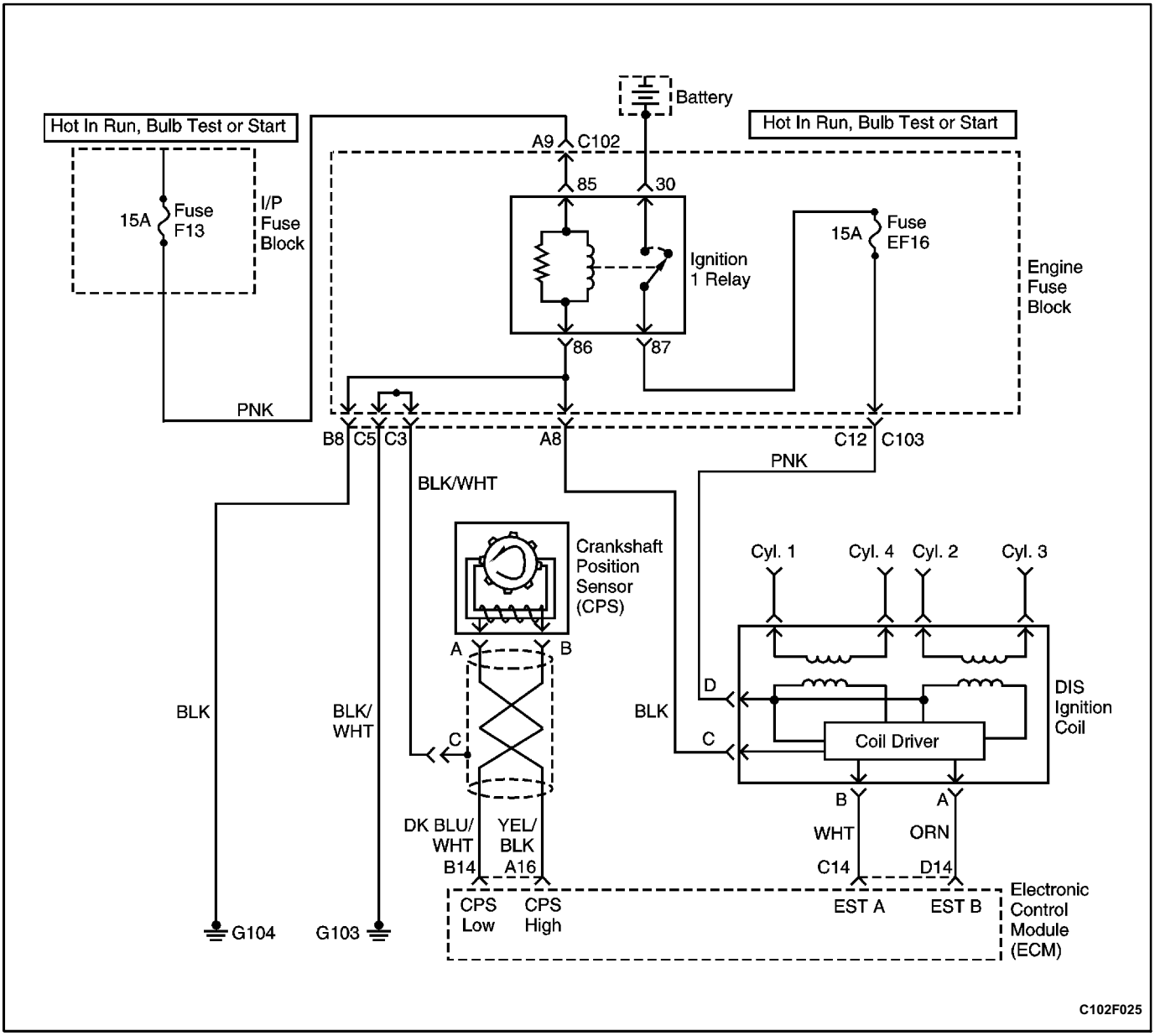

IGNITION SYSTEM CHECK (2.0L DOHC)

Circuit Description

The direct ignition system (DIS) uses a waste spark method of spark distribution. In this type of DIS system, the crankshaft position sensor (CPS) is mounted to the oil pump near a slotted wheel that is a part of the crankshaft pulley. The CPS sends reference pulses to the electronic control module (ECM). The ECM then triggers the DIS ignition coil. Once the ECM triggers the DIS ignition coil, both of the connected spark plugs fire at the same time. One cylinder is on its compression stroke at the same time that the other is on the exhaust stroke, resulting in lower energy needed to fire the spark plug in the cylinder on its exhaust stroke.

This leaves the remainder of the high voltage to be used to fire the spark plug in the cylinder on its compression stroke. Since the CPS is in a fixed position, timing adjustments are not possible or needed.

Test Description

The number(s) below refer to step(s) on the diagnostic table.

2. It is important to check for the presence of spark to all of the cylinders to isolate the problem to either direct ignition system (DIS) ignition coil inputs or outputs.

5. In checking the electronic control module (ECM) outputs for the electronic spark timing signal, it recommended to use an oscilloscope to view the varying voltage signals. In measuring these outputs with a voltmeter, intermittent errors may occur that cannot be seen by a voltmeter.
6. After confirming ECM inputs for the electronic spark timing to the DIS ignition coil are OK, it can be determined that a faulty DIS ignition coil is at fault.
11. After confirming proper crankshaft position sensor inputs to the ECM and no wiring problems present, it can be determined that the ECM is at fault.
24. This step, along with step 25, checks for battery voltage and a ground to the DIS ignition coil.
26. If the wiring between the DIS ignition coil and the ignition 1 relay connector terminal 87 is OK, the problem is in the ignition 1 relay circuit.

Ignition System Check (2.0L DOHC)

Caution: Use only electrically insulated pliers when handling ignition wires with the engine running to prevent an electrical shock.

Step	Action	Value(s)	Yes	No
1	1. Remove the spark plugs. 2. Inspect for wet spark plugs, cracks, wear, improper gap, burned electrodes, or heavy deposits. 3. Replace the spark plugs as needed. Is the repair complete?	-	System OK	Go to *Step 2*
2	Check for the presence of spark from all of the ignition wires while cranking the engine. Is spark present from all of the ignition wires?	-	System OK	Go to *Step 3*
3	1. Measure the resistance of the ignition wires. 2. Replace any ignition wire(s) with a resistance above the value specified. 3. Check for the presence of spark from all of the ignition wires. Is spark present from all of the ignition wires?	30,000 Ω	System OK	Go to *Step 4*
4	Is spark present from at least one of the ignition wires, but not all of the ignition wires?	-	Go to *Step 5*	Go to *Step 12*
5	1. Turn the ignition OFF. 2. Disconnect the direct ignition system (DIS) ignition coil connector. 3. While cranking the engine, measure the voltage at the DIS ignition coil connector terminal B. Does the voltage fluctuate within the values specified?	0.2-2.0 V	Go to *Step 6*	Go to *Step 7*
6	While cranking the engine, measure the voltage at the DIS ignition coil connector terminal A. Does the voltage fluctuate within the values specified?	0.2-2.0 V	Go to *Step 10*	Go to *Step 8*
7	Check for an open in the wire from the DIS ignition coil connector terminal B to the electronic control module (ECM) connector terminal C14. Is the problem found?	-	Go to *Step 9*	Go to *Step 11*
8	Check for an open in the wire from the DIS ignition coil connector terminal A to the ECM connector terminal D14. Is the problem found?	-	Go to *Step 9*	Go to *Step 11*

Ignition System Check (2.0L DOHC) (Cont'd)

Step	Action	Value(s)	Yes	No
9	1. Repair the wiring as needed. 2. Connect the DIS ignition coil connector. 3. Check for the presence of spark from all of the ignition wires. Is spark present from all of the ignition wires?	-	System OK	-
10	1. Replace the direct ignition system ignition coil. 2. Connect the DIS ignition coil connector. 3. Check for the presence of spark from all of the ignition wires. Is spark present from all of the ignition wires?	-	System OK	-
11	1. Replace the electronic control module. 2. Connect the DIS ignition coil connector. 3. Check for the presence of spark from all of the ignition wires. Is spark present from all of the ignition wires?	-	System OK	-
12	1. Turn the ignition OFF. 2. Disconnect the crankshaft position sensor (CPS) connector. 3. Measure the resistance between the CPS terminals A and B. Is the resistance within the value specified?	400-600 Ω	Go to *Step 13*	Go to *Step 28*
13	1. Measure the resistance between the CPS terminals A and C. 2. Measure the resistance between the CPS terminals B and C. Is the resistance infinite (open circuit)?	-	Go to *Step 14*	Go to *Step 28*
14	1. Turn the ignition ON. 2. Measure the voltage between the CPS connector terminals A and C. Is the voltage within the value specified?	0.95-1.10 V	Go to *Step 20*	Go to *Step 15*
15	Measure the voltage between the CPS connector terminal A and ground. Is the voltage within the value specified?	0.95-1.10 V	Go to *Step 17*	Go to *Step 16*
16	Check the wire between the CPS connector terminal A and the ECM connector terminal B14 for an open or short. Is the problem found?	-	Go to *Step 18*	Go to *Step 11*
17	Check the wire between the CPS connector terminal C and ground for an open or short. Is the problem found?	-	Go to *Step 19*	Go to *Step 11*
18	Repair the wire between the CPS connector terminal A and the ECM connector terminal B14. Is the repair complete?	-	System OK	-
19	Repair the wire between the CPS connector terminal C and ground. Is the repair complete?	-	System OK	-
20	1. Turn the ignition ON. 2. Measure the voltage between the CPS connector terminals B and C. Is the voltage within the value specified?	0.95-1.10 V	Go to *Step 24*	Go to *Step 21*

Ignition System Check (2.0L DOHC) (Cont'd)

Step	Action	Value(s)	Yes	No
21	Measure the voltage between the CPS connector terminal B and ground. Is the voltage within the value specified?	0.95-1.10 V	Go to *Step 17*	Go to *Step 22*
22	Check the wire between the CPS connector terminal B and the ECM connector terminal A16 for an open or short. Is the problem found?	-	Go to *Step 23*	Go to *Step 11*
23	Repair the wire between the CPS connector terminal B and the ECM connector terminal A16. Is the repair complete?	-	System OK	-
24	1. Turn the ignition OFF. 2. Connect a test light between the DIS ignition coil connector terminal D and ground. 3. Turn the ignition ON. Is the test light on?	-	Go to *Step 25*	Go to *Step 26*
25	Connect a test light between the DIS ignition coil connector terminal C and battery positive. Is the test light on?	-	Go to *Step 5*	Go to *Step 27*
26	Check for an open in the wiring between the DIS ignition coil connector, terminal D and the ignition 1 relay connector terminal 87. Is the problem found?	-	Go to *Step 29*	Go to "Ignition 1 Relay Circuit Check"
27	Repair the wire between the DIS ignition coil connector terminal C and ground. Is the repair complete?	-	System OK	-
28	Replace the crankshaft position sensor. Is the repair complete?	-	System OK	-
29	Repair the open in the wiring between the DIS ignition coil connector terminal D and the ignition 1 relay connector terminal 87. Is the repair complete?	-	System OK	-

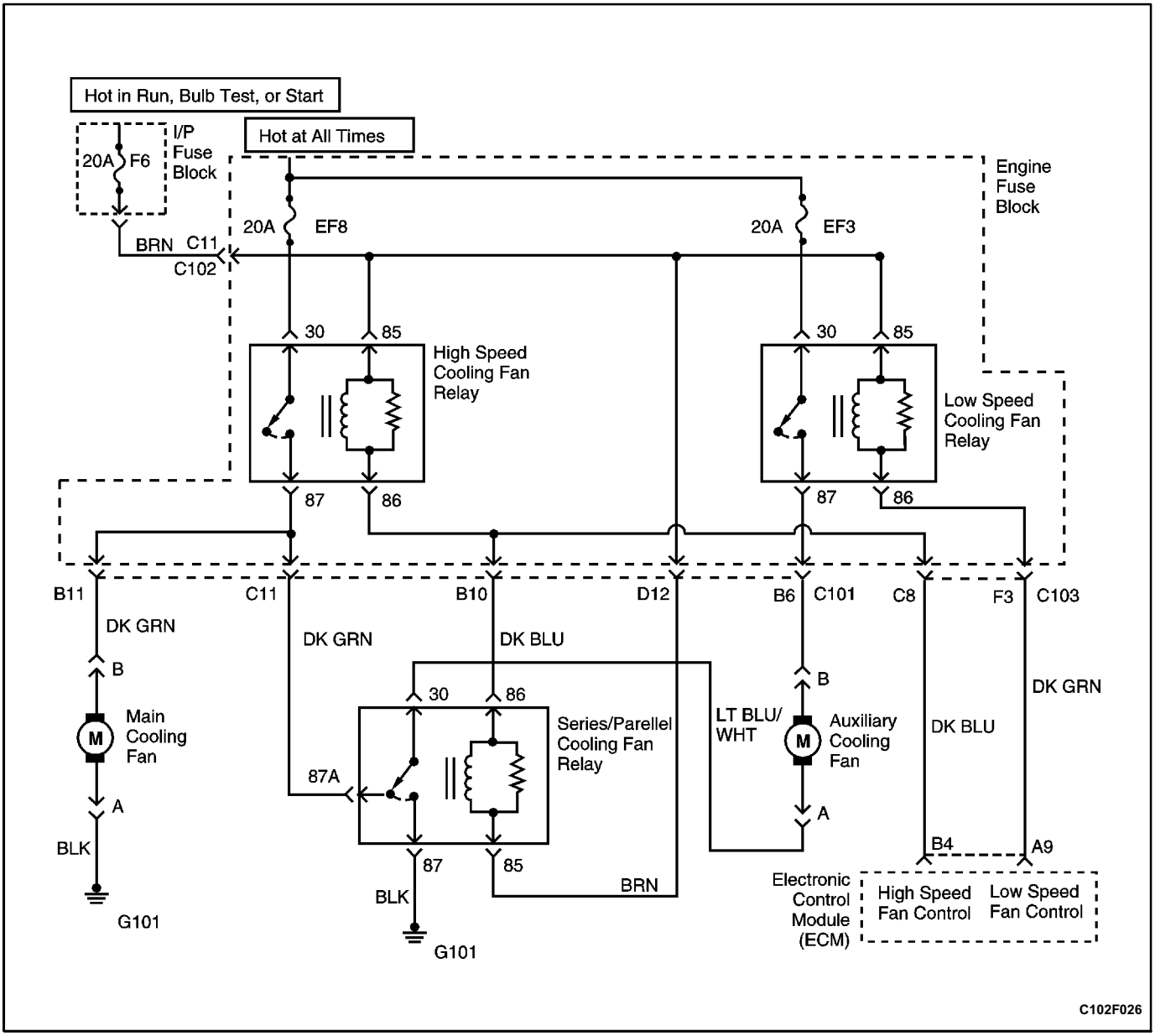

CIRCUIT CHECK - WITH A/C (2.0L SOHC)

Circuit Description

The engine cooling fan circuit operates the main cooling fan and the auxiliary cooling fan. The cooling fans are controlled by the electronic control module (ECM) based on inputs from the coolant temperature sensor (CTS) and the air conditioning pressure (ACP) sensor. The ECM controls the low speed cooling fan operation by internally grounding the ECM connector terminal A9. This energizes the low speed cooling fan relay and operates the main cooling fan and the auxiliary cooling fan at low speed as the cooling fans are connected in a series circuit. The ECM controls the high speed cooling fan operation by internally grounding the ECM connector terminal A9 and the ECM connector terminal B4 at the same time. This energizes the low speed cooling fan relay, the high speed cooling fan relay, and the series/parallel cooling fan relay resulting in high speed fan operation as the cooling fans are now connected in a parallel circuit.

Diagnostic Aids

- If the owner complained of an overheating problem, it must be determined if the complaint was due to an actual boil over, or the engine coolant temperature gauge indicated overheating. If the engine is overheating and the cooling fans are on, the cooling system should be checked.
- If the engine fuse block fuses EF3 or EF8 become open (blown) immediately after installation, inspect for a short to ground in the wiring of the appropriate circuit. If the fuses become open (blown) when the cooling fans are to be turned on by the electronic control module (ECM), suspect a faulty cooling fan motor.
- The ECM will turn the cooling fans on at low speed when the coolant temperature is 96°C (205°F). The ECM will turn the cooling fans off when the coolant temperature is 93°C (199°F).

- The ECM will turn the cooling fans on at high speed when the coolant temperature is 100°C (212°F). The ECM will change the cooling fans from high speed to low speed when the coolant temperature is 97°C (207°F).
- The ECM will turn the cooling fans on at low speed when the A/C system is on. The ECM will change the cooling fans from low speed to high speed when the high side A/C pressure is 1 859 kPa (270 psi) then return to low speed when the high side A/C pressure is 1 449 kPa (210 psi).
- The cooling fan circuit can be checked quickly by disconnecting the ECM red connector and grounding the connector terminal A9. This should create low speed cooling fan operation with the ignition ON. By grounding the ECM connector terminals A9 and B4 and turning the ignition ON, high speed cooling fan operation should be achieved.

Test Description

The number(s) below refer to step(s) on the diagnostic table.

4. This step, along with step 5, checks for the ability of the electronic control module (ECM) to operate the cooling fans.

8. This step, along with step 9, checks for the ability of the ECM to operate the cooling fans in response to A/C pressure readings.

16. After confirming battery voltage and the ECM supplying a ground to the coil side of the low speed cooling fan relay, by jumpering connector terminals 30 and 87 it will be determined if the relay is at fault or a wiring problem is present.

31. This step checks for the presence of battery voltage to the main cooling fan when the A/C is on. If battery voltage is present and the cooling fans are not operating, the problem is in the ground side of the cooling fan circuit.

37. By directly grounding the ECM connector terminals A9 and B4, the main and auxiliary cooling fans should run at high speed.

Engine Cooling Fan Circuit Check - With A/C (2.0L SOHC)

Step	Action	Value(s)	Yes	No
1	Was the Diagnostic System Check performed?	-	Go to *Step 2*	Go to "Diagnostic System Check"
2	1. Check the engine fuse block fuse EF3. 2. Replace the fuse as needed. Is the fuse OK?	-	Go to *Step 3*	Go to "Diagnostic Aids"
3	1. Check the engine fuse block fuse EF8. 2. Replace the fuse as needed. Is the fuse OK?	-	Go to *Step 4*	Go to "Diagnostic Aids"
4	1. Turn the ignition OFF. 2. Turn the A/C switch OFF. 3. Connect a scan tool to the assembly line diagnostic link (ALDL). 4. Start the engine. 5. The cooling fans should run at low speed when the coolant temperature reaches 96°C (207°F). Do the cooling fans run at low speed?	-	Go to *Step 5*	Go to *Step 10*

Engine Cooling Fan Circuit Check - With A/C (2.0L SOHC) (Cont'd)

Step	Action	Value(s)	Yes	No
5	1. Turn the ignition OFF. 2. Turn the A/C switch OFF. 3. Connect a scan tool to the ALDL. 4. Start the engine. 5. The cooling fans should run at high speed when the coolant temperature reaches 100°C (214°F). Do the cooling fans run at high speed?	-	Go to *Step 6*	Go to *Step 33*
6	1. Turn the ignition OFF. 2. Start the engine. 3. Turn the A/C switch ON. Does the A/C compressor clutch engage?	-	Go to *Step 8*	Go to *Step 7*
7	1. Diagnose the A/C compressor clutch circuit. 2. Repair the A/C compressor clutch circuit as needed. 3. Start the engine. 4. Turn the A/C switch ON. Does the A/C compressor clutch engage?	-	Go to *Step 8*	-
8	Do the cooling fans run at low speed?	-	Go to *Step 9*	Go to *Step 31*
9	1. Turn the ignition OFF. 2. Connect the A/C pressure gauges. 3. Start the engine. 4. Turn the A/C switch ON. 5. The cooling fans should run at high speed when the high side A/C pressure reaches 1 859 kPa (270 psi). Do the cooling fans run at high speed?	-	System OK	-
10	1. Turn the ignition OFF. 2. Connect a scan tool to the ALDL. 3. The coolant temperature should be above 96°C (205°C). 4. Disconnect the auxiliary cooling fan connector. 5. Turn the ignition ON. 6. Connect a test light between the auxiliary cooling fan connector terminal B and ground. Is the test light on?	-	Go to *Step 11*	Go to *Step 12*
11	1. Turn the ignition OFF. 2. Connect a scan tool to the ALDL. 3. The coolant temperature should be above 96°C (205°C). 4. Disconnect the auxiliary cooling fan connector. 5. Connect a test light between the auxiliary cooling fan connector terminal A and battery positive. Is the test light on?	-	Go to *Step 28*	Go to *Step 17*
12	1. Turn the ignition OFF. 2. Disconnect the low speed cooling fan relay. 3. Connect a test light between the low speed cooling fan relay connector terminal 85 and ground. 4. Turn the ignition ON. Is the test light on?	-	Go to *Step 13*	Go to *Step 24*

Engine Cooling Fan Circuit Check - With A/C (2.0L SOHC) (Cont'd)

Step	Action	Value(s)	Yes	No
13	1. Turn the ignition OFF. 2. Connect the low speed cooling fan relay. 3. Disconnect the electronic control module (ECM) red connector. 4. Connect a fused jumper between the ECM connector terminal A9 and ground. 5. Turn the ignition ON. Do the cooling fans run at low speed?	-	Go to *Step 30*	Go to *Step 14*
14	Check for an open wire between the low speed cooling fan relay connector terminal 86 and the ECM connector terminal A9. Is the problem found?	-	Go to *Step 25*	Go to *Step 15*
15	1. Turn the ignition OFF. 2. Disconnect the low speed cooling fan relay. 3. Connect a test light between the low speed cooling fan relay connector terminal 30 and ground. Is the test light on?	-	Go to *Step 16*	Go to *Step 23*
16	Connect a fused jumper between the low speed cooling fan relay connector terminals 30 and 87. Do the cooling fans run at low speed?	-	Go to *Step 26*	Go to *Step 17*
17	1. Disconnect the series/parallel cooling fan relay. 2. Connect a fused jumper between the low speed cooling fan relay connector terminals 30 and 87. 3. Connect a fused jumper between the series/parallel cooling fan relay connector terminals 30 and 87. Do the cooling fans run at low speed?	-	Go to *Step 27*	Go to *Step 18*
18	Check the wire between the low speed cooling fan relay connector terminal 87 to the auxiliary cooling fan connector terminal B for an open. Is the problem found?	-	Go to *Step 22*	Go to *Step 19*
19	Check the wire between the auxiliary cooling fan connector terminal A and the series/parallel cooling fan relay connector terminal 30 for an open. Is the problem found?	-	Go to *Step 22*	Go to *Step 20*
20	Check the wire between the series/parallel cooling fan relay connector terminal 87 and the main cooling fan connector terminal B for an open. Is the problem found?	-	Go to *Step 22*	Go to *Step 21*
21	Check for an open wire between the main cooling fan connector terminal A and ground. Is the problem found?	-	Go to *Step 22*	Go to *Step 29*
22	Repair the open wire as needed. Is the repair complete?	-	System OK	-
23	Repair the open between the low speed cooling fan relay connector terminal 30 and the battery. Is the repair complete?	-	System OK	-
24	Repair the open between the low speed cooling fan relay connector terminal 85 and the ignition switch. Is the repair complete?	-	System OK	-

Engine Cooling Fan Circuit Check - With A/C (2.0L SOHC) (Cont'd)

Step	Action	Value(s)	Yes	No
25	Repair the open wire between the low speed cooling fan relay connector terminal 86 and the ECM connector terminal A9. Is the repair complete?	-	System OK	-
26	Replace the low speed cooling fan relay. Is the repair complete?	-	System OK	-
27	Replace the series/parallel cooling fan relay. Is the repair complete?	-	System OK	-
28	Replace the auxiliary cooling fan. Is the repair complete?	-	System OK	-
29	Replace the main cooling fan. Is the repair complete?	-	System OK	-
30	Replace the ECM. Is the repair complete?	-	System OK	-
31	1. Turn the ignition OFF. 2. Disconnect the auxiliary cooling fan connector. 3. Connect a test light between the auxiliary cooling fan connector terminal B and ground. 4. Turn the A/C switch ON. 5. Start the engine. Is the test light on?	-	Go to *Step 32*	Go to *Step 12*
32	1. Turn the ignition OFF. 2. Connect a test light between the auxiliary cooling fan connector terminal A and battery positive. 3. Turn the A/C switch ON. 4. Start the engine. Is the test light on?	-	Go to *Step 28*	Go to *Step 17*
33	1. Turn the ignition OFF. 2. Disconnect the high speed cooling fan relay. 3. Connect a test light between the high speed cooling fan relay connector terminal 85 and ground. 4. Turn the ignition ON. Is the test light on?	-	Go to *Step 34*	Go to *Step 44*
34	1. Turn the ignition OFF. 2. Connect a test light between the high speed cooling fan relay connector terminal 30 and ground. Is the test light on?	-	Go to *Step 35*	Go to *Step 45*
35	1. Disconnect the series/parallel cooling fan relay. 2. Connect a test light between the series/parallel cooling fan relay connector terminal 85 and ground. 3. Turn the ignition ON. Is the test light on?	-	Go to *Step 36*	Go to *Step 46*
36	1. Turn the ignition OFF. 2. Connect a test light between the series/parallel cooling fan relay connector terminal 87 and battery positive. Is the test light on?	-	Go to *Step 37*	Go to *Step 47*

Engine Cooling Fan Circuit Check - With A/C (2.0L SOHC) (Cont'd)

Step	Action	Value(s)	Yes	No
37	1. Connect the auxiliary cooling fan connector. 2. Connect the high speed cooling fan relay. 3. Connect the series/parallel cooling fan relay. 4. Disconnect the ECM red connector. 5. Connect a fused jumper between the ECM connector terminal A9 and ground. 6. Connect a fused jumper between the ECM connector terminal B4 and ground. 7. Turn the ignition ON. Do the cooling fans run at high speed?	-	Go to *Step 30*	Go to *Step 38*
38	1. Turn the ignition OFF. 2. Check for an open wire between the high speed cooling fan relay connector terminal 86 and the ECM connector terminal B4. Is the problem found?	-	Go to *Step 22*	Go to *Step 39*
39	1. Disconnect the high speed cooling fan relay. 2. Connect a test light between the high speed cooling fan relay connector terminal 87 and battery positive. Is the test light on?	-	Go to *Step 40*	Go to *Step 48*
40	1. Disconnect the ECM red connector. 2. Connect a fused jumper between the ECM connector terminal B4 and ground. 3. Disconnect the series/parallel cooling fan relay. 4. Connect a test light between the series/parallel cooling fan relay connector terminal 86 and battery positive. Is the test light on?	-	Go to *Step 41*	Go to *Step 49*
41	1. Connect the series/parallel cooling fan relay. 2. Connect a fused jumper between the ECM connector terminal B4 and ground. 3. Disconnect the high speed cooling fan relay. 4. Connect a fused jumper between the high speed cooling fan relay connector terminals 30 and 87. 5. Disconnect the low speed cooling fan relay. 6. Connect a fused jumper between the low speed cooling fan relay connector terminals 30 and 87. 7. Turn the ignition ON. Do the cooling fans run at high speed?	-	Go to *Step 43*	Go to *Step 42*
42	1. Turn the ignition OFF. 2. Connect a fused jumper between the ECM connector terminal B4 and ground. 3. Disconnect the series/parallel cooling fan relay. 4. Connect a fused jumper between the series/parallel cooling fan relay connector terminals 30 and 87. 5. Connect a fused jumper between the low speed cooling fan relay connector terminals 30 and 87. 6. Turn the ignition ON. Do the cooling fans run at high speed?	-	Go to *Step 27*	-

Engine Cooling Fan Circuit Check - With A/C (2.0L SOHC) (Cont'd)

Step	Action	Value(s)	Yes	No
43	Replace the high speed cooling fan relay. Is the repair complete?	-	System OK	-
44	Repair the open wire between the high speed cooling fan relay connector terminal 85 and the ignition switch. Is the repair complete?	-	System OK	-
45	Repair the open wire between the high speed cooling fan relay connector terminal 30 and the battery. Is the repair complete?	-	System OK	-
46	Repair the open wire between the series/parallel cooling fan relay connector terminal 85 and the ignition switch. Is the repair complete?	-	System OK	-
47	Repair the open wire between the series/parallel cooling fan relay connector terminal 87 and ground. Is the repair complete?	-	System OK	-
48	Repair the open wire between the high speed cooling fan relay connector terminal 87 and the main cooling fan connector terminal B. Is the repair complete?	-	System OK	-
49	Repair the open wire between the series/parallel cooling fan relay connector terminal 86 and the ECM connector terminal B4. Is the repair complete?	-	System OK	-

BLANK

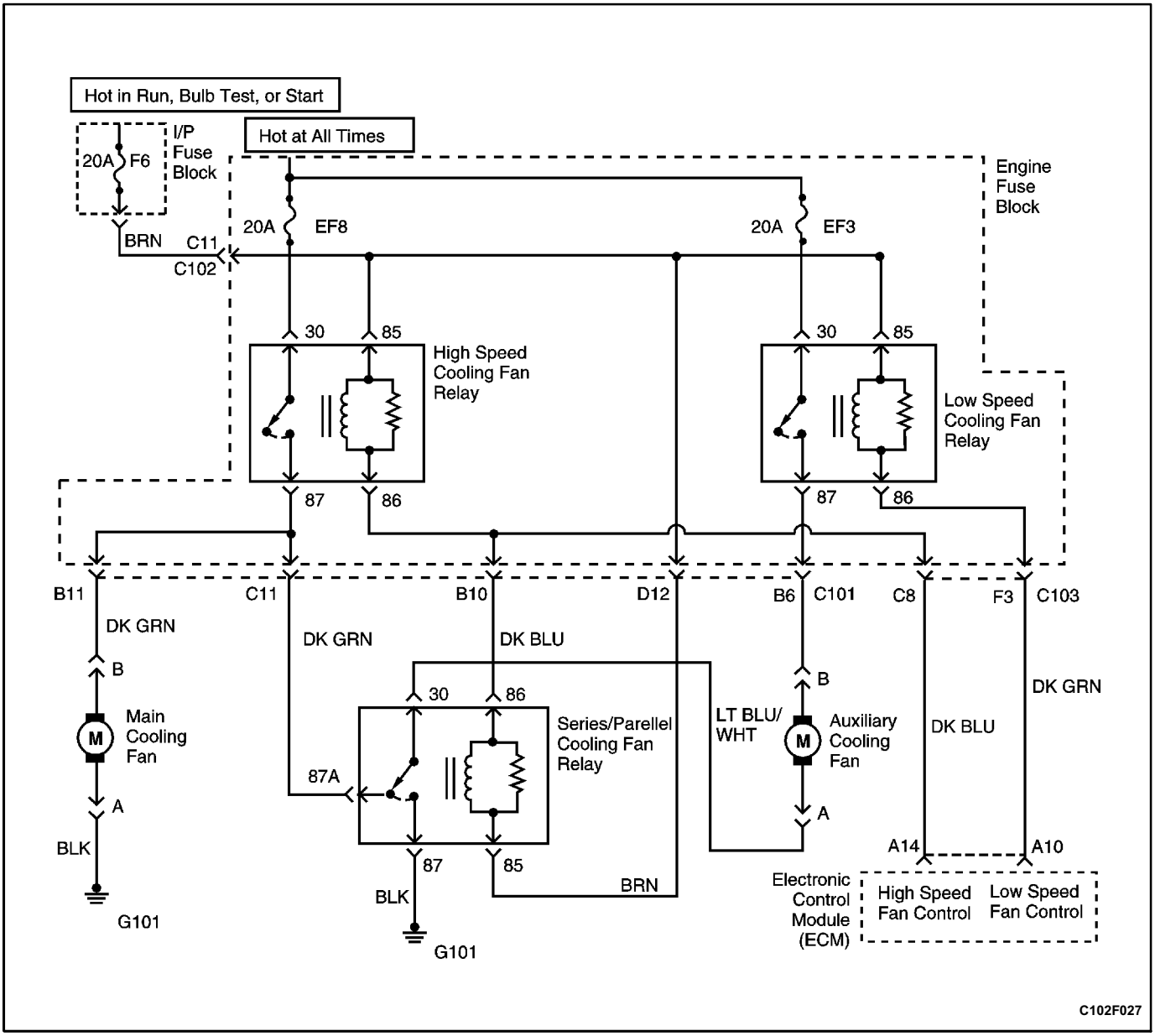

ENGINE COOLING FAN CIRCUIT CHECK - WITH A/C (2.0L DOHC)

Circuit Description

The engine cooling fan circuit operates the main cooling fan and the auxiliary cooling fan. The cooling fans are controlled by the electronic control module (ECM) based on inputs from the coolant temperature sensor (CTS) and the air conditioning pressure (ACP) sensor. The ECM controls the low speed cooling fan operation by internally grounding the ECM connector terminal A10. This energizes the low speed cooling fan relay and operates the main cooling fan and the auxiliary cooling fan at low speed as the cooling fans are connected in a series circuit. The ECM controls the high speed cooling fan operation by internally grounding the ECM connector terminal A10 and the ECM connector terminal A14 at the same time. This energizes the low speed cooling fan relay, the high speed cooling fan relay, and the series/parallel cooling fan relay resulting in high speed fan operation as the cooling fans are now connected in a parallel circuit.

Diagnostic Aids

- ✳ If the owner complained of an overheating problem, it must be determined if the complaint was due to an actual boil over, or the engine coolant temperature gauge indicated overheating. If the engine is overheating and the cooling fans are on, the cooling system should be checked.
- ✳ If the engine fuse block fuses EF3 or EF8 become open (blown) immediately after installation, inspect for a short to ground in the wiring of the appropriate circuit. If the fuses become open (blown) when the cooling fans are to be turned on by the electronic control module (ECM), suspect a faulty cooling fan motor.
- ✳ The ECM will turn the cooling fans on at low speed when the coolant temperature is 93°C (199°F). The ECM will turn the cooling fans off when the coolant temperature is 90°C (194°F).

✳ The ECM will turn the cooling fans on at high speed when the coolant temperature is 97°C (207°F). The ECM will change the cooling fans from high speed to low speed when the coolant temperature is 94°C (201°F).

✳ The ECM will turn the cooling fans on at low speed when the A/C system is on. The ECM will change the cooling fans from low speed to high speed when the high side A/C pressure is 1 859 kPa (270 psi) then return to low speed when the high side A/C pressure is 1 449 kPa (210 psi).

✳ The cooling fan circuit can be checked quickly by disconnecting the ECM red connector and grounding the connector terminal A10. This should create low speed cooling fan operation with the ignition ON. By grounding the ECM connector terminals A10 and A14 and turning the ignition ON, high speed cooling fan operation should be achieved.

Test Description

The number(s) below refer to step(s) on the diagnostic table.

4. This step, along with step 5, checks for the ability of the electronic control module (ECM) to operate the cooling fans.

8. This step, along with step 9, checks for the ability of the ECM to operate the cooling fans in response to A/C pressure readings.

16. After confirming battery voltage and the ECM supplying a ground to the coil side of the low speed cooling fan relay, by jumpering connector terminals 30 and 87 it will be determined if the relay is at fault or a wiring problem is present.

31. This step checks for the presence of battery voltage to the main cooling fan when the A/C is on. If battery voltage is present and the cooling fans are not operating, the problem is in the ground side of the cooling fan circuit.

37. By directly grounding the ECM connector terminals A10 and A14, the main and auxiliary cooling fans should run at high speed.

Engine Cooling Fan Circuit Check - With A/C (2.0L DOHC)

Step	Action	Value(s)	Yes	No
1	Was the Diagnostic System Check performed?	-	Go to *Step 2*	Go to "Diagnostic System Check"
2	1. Check the engine fuse block fuse EF3. 2. Replace the fuse as needed. Is the fuse OK?	-	Go to *Step 3*	Go to "Diagnostic Aids"
3	1. Check the engine fuse block fuse EF8. 2. Replace the fuse as needed. Is the fuse OK?	-	Go to *Step 4*	Go to "Diagnostic Aids"
4	1. Turn the ignition OFF. 2. Turn the A/C switch OFF. 3. Connect a scan tool to the assembly line diagnostic link (ALDL). 4. Start the engine. 5. The cooling fans should run at low speed when the coolant temperature reaches 93°C (199°F). Do the cooling fans run at low speed?	-	Go to *Step 5*	Go to *Step 10*

Engine Cooling Fan Circuit Check - With A/C (2.0L DOHC) (Cont'd)

Step	Action	Value(s)	Yes	No
5	1. Turn the ignition OFF. 2. Turn the A/C switch OFF. 3. Connect a scan tool to the ALDL. 4. Start the engine. 5. The cooling fans should run at high speed when the coolant temperature reaches 97°C (207°F). Do the cooling fans run at high speed?	-	Go to *Step 6*	Go to *Step 33*
6	1. Turn the ignition OFF. 2. Start the engine. 3. Turn the A/C switch ON. Does the A/C compressor clutch engage?	-	Go to *Step 8*	Go to *Step 7*
7	1. Diagnose the A/C compressor clutch circuit. 2. Repair the A/C compressor clutch circuit as needed. 3. Start the engine. 4. Turn the A/C switch ON. Does the A/C compressor clutch engage?	-	Go to *Step 8*	-
8	Do the cooling fans run at low speed?	-	Go to *Step 9*	Go to *Step 31*
9	1. Turn the ignition OFF. 2. Connect the A/C pressure gauges. 3. Start the engine. 4. Turn the A/C switch ON. 5. The cooling fans should run at high speed when the high side A/C pressure reaches 1 859 kPa (270 psi). Do the cooling fans run at high speed?	-	System OK	-
10	1. Turn the ignition OFF. 2. Connect a scan tool to the ALDL. 3. The coolant temperature should be above 93°C (199°F). 4. Disconnect the auxiliary cooling fan connector. 5. Turn the ignition ON. 6. Connect a test light between the auxiliary cooling fan connector terminal B and ground. Is the test light on?	-	Go to *Step 11*	Go to *Step 12*
11	1. Turn the ignition OFF. 2. Connect a scan tool to the ALDL. 3. The coolant temperature should be above 93°C (199°F). 4. Disconnect the auxiliary cooling fan connector. 5. Connect a test light between the auxiliary cooling fan connector terminal A and battery positive. Is the test light on?	-	Go to *Step 28*	Go to *Step 17*
12	1. Turn the ignition OFF. 2. Disconnect the low speed cooling fan relay. 3. Connect a test light between the low speed cooling fan relay connector terminal 85 and ground. 4. Turn the ignition ON. Is the test light on?	-	Go to *Step 13*	Go to *Step 24*

Engine Cooling Fan Circuit Check - With A/C (2.0L DOHC) (Cont'd)

Step	Action	Value(s)	Yes	No
13	1. Turn the ignition OFF. 2. Connect the low speed cooling fan relay. 3. Disconnect the electronic control module (ECM) red connector. 4. Connect a fused jumper between the ECM connector terminal A10 and ground. 5. Turn the ignition ON. Do the cooling fans run at low speed?	-	Go to *Step 30*	Go to *Step 14*
14	Check for an open wire between the low speed cooling fan relay connector terminal 86 and the ECM connector terminal A10. Is the problem found?	-	Go to *Step 25*	Go to *Step 15*
15	1. Turn the ignition OFF. 2. Disconnect the low speed cooling fan relay. 3. Connect a test light between the low speed cooling fan relay connector terminal 30 and ground. Is the test light on?	-	Go to *Step 16*	Go to *Step 23*
16	Connect a fused jumper between the low speed cooling fan relay connector terminals 30 and 87. Do the cooling fans run at low speed?	-	Go to *Step 26*	Go to *Step 17*
17	1. Disconnect the series/parallel cooling fan relay. 2. Connect a fused jumper between the low speed cooling fan relay connector terminals 30 and 87. 3. Connect a fused jumper between the series/parallel cooling fan relay connector terminals 30 and 87. Do the cooling fans run at low speed?	-	Go to *Step 27*	Go to *Step 18*
18	Check the wire between the low speed cooling fan relay connector terminal 87 to the auxiliary cooling fan connector terminal B for an open. Is the problem found?	-	Go to *Step 22*	Go to *Step 19*
19	Check the wire between the auxiliary cooling fan connector terminal A and the series/parallel cooling fan relay connector terminal 30 for an open. Is the problem found?	-	Go to *Step 22*	Go to *Step 20*
20	Check the wire between the series/parallel cooling fan relay connector terminal 87 and the main cooling fan connector terminal B for an open. Is the problem found?	-	Go to *Step 22*	Go to *Step 21*
21	Check for an open wire between the main cooling fan connector terminal A and ground. Is the problem found?	-	Go to *Step 22*	Go to *Step 29*
22	Repair the open wire as needed. Is the repair complete?	-	System OK	-
23	Repair the open between the low speed cooling fan relay connector terminal 30 and the battery. Is the repair complete?	-	System OK	-
24	Repair the open between the low speed cooling fan relay connector terminal 85 and the ignition switch. Is the repair complete?	-	System OK	-

Engine Cooling Fan Circuit Check - With A/C (2.0L DOHC) (Cont'd)

Step	Action	Value(s)	Yes	No
25	Repair the open wire between the low speed cooling fan relay connector terminal 86 and the ECM connector terminal A10. Is the repair complete?	-	System OK	-
26	Replace the low speed cooling fan relay. Is the repair complete?	-	System OK	-
27	Replace the series/parallel cooling fan relay. Is the repair complete?	-	System OK	-
28	Replace the auxiliary cooling fan. Is the repair complete?	-	System OK	-
29	Replace the main cooling fan. Is the repair complete?	-	System OK	-
30	Replace the ECM. Is the repair complete?	-	System OK	-
31	1. Turn the ignition OFF. 2. Disconnect the auxiliary cooling fan connector. 3. Connect a test light between the main cooling fan connector terminal B and ground. 4. Turn the A/C switch ON. 5. Start the engine. Is the test light on?	-	Go to *Step 32*	Go to *Step 12*
32	1. Turn the ignition OFF. 2. Connect a test light between the auxiliary cooling fan connector terminal A and battery positive. 3. Turn the A/C switch ON. 4. Start the engine. Is the test light on?	-	Go to *Step 28*	Go to *Step 17*
33	1. Turn the ignition OFF. 2. Disconnect the high speed cooling fan relay. 3. Connect a test light between the high speed cooling fan relay connector terminal 85 and ground. 4. Turn the ignition ON. Is the test light on?	-	Go to *Step 34*	Go to *Step 44*
34	1. Turn the ignition OFF. 2. Connect a test light between the high speed cooling fan relay connector terminal 30 and ground. Is the test light on?	-	Go to *Step 35*	Go to *Step 45*
35	1. Disconnect the series/parallel cooling fan relay. 2. Connect a test light between the series/parallel cooling fan relay connector terminal 85 and ground. 3. Turn the ignition ON. Is the test light on?	-	Go to *Step 36*	Go to *Step 46*
36	1. Turn the ignition OFF. 2. Connect a test light between the series/parallel cooling fan relay connector terminal 87 and battery positive. Is the test light on?	-	Go to *Step 37*	Go to *Step 47*

Engine Cooling Fan Circuit Check - With A/C (2.0L DOHC) (Cont'd)

Step	Action	Value(s)	Yes	No
37	1. Connect the auxiliary cooling fan connector. 2. Connect the high speed cooling fan relay. 3. Connect the series/parallel cooling fan relay. 4. Disconnect the ECM red connector. 5. Connect a fused jumper between the ECM connector terminal A10 and ground. 6. Connect a fused jumper between the ECM connector terminal A14 and ground. 7. Turn the ignition ON. Do the cooling fans run at high speed?	-	Go to *Step 30*	Go to *Step 38*
38	1. Turn the ignition OFF. 2. Check for an open wire between the high speed cooling fan relay connector terminal 86 and the ECM connector terminal A14. Is the problem found?	-	Go to *Step 22*	Go to *Step 39*
39	1. Disconnect the high speed cooling fan relay. 2. Connect a test light between the high speed cooling fan relay connector terminal 87 and battery positive. Is the test light on?	-	Go to *Step 40*	Go to *Step 48*
40	1. Disconnect the ECM red connector. 2. Connect a fused jumper between the ECM connector terminal A14 and ground. 3. Disconnect the series/parallel cooling fan relay. 4. Connect a test light between the series/parallel cooling fan relay connector terminal 86 and battery positive. Is the test light on?	-	Go to *Step 41*	Go to *Step 49*
41	1. Connect the series/parallel cooling fan relay. 2. Connect a fused jumper between the ECM connector terminal A14 and ground. 3. Disconnect the high speed cooling fan relay. 4. Connect a fused jumper between the high speed cooling fan relay connector terminals 30 and 87. 5. Disconnect the low speed cooling fan relay. 6. Connect a fused jumper between the low speed cooling fan relay connector terminals 30 and 87. 7. Turn the ignition ON. Do the cooling fans run at high speed?	-	Go to *Step 43*	Go to *Step 42*
42	1. Turn the ignition OFF. 2. Connect a fused jumper between the ECM connector terminal A14 and ground. 3. Disconnect the series/parallel cooling fan relay. 4. Connect a fused jumper between the series/parallel cooling fan relay connector terminals 30 and 87. 5. Connect a fused jumper between the low speed cooling fan relay connector terminals 30 and 87. 6. Turn the ignition ON. Do the cooling fans run at high speed?	-	Go to *Step 27*	-

Engine Cooling Fan Circuit Check - With A/C (2.0L DOHC) (Cont'd)

Step	Action	Value(s)	Yes	No
43	Replace the high speed cooling fan relay. Is the repair complete?	-	System OK	-
44	Repair the open wire between the high speed cooling fan relay connector terminal 85 and the ignition switch. Is the repair complete?	-	System OK	-
45	Repair the open wire between the high speed cooling fan relay connector terminal 30 and the battery. Is the repair complete?	-	System OK	-
46	Repair the open wire between the series/parallel cooling fan relay connector terminal 85 and the ignition switch. Is the repair complete?	-	System OK	-
47	Repair the open wire between the series/parallel cooling fan relay connector terminal 87 and ground. Is the repair complete?	-	System OK	-
48	Repair the open wire between the high speed cooling fan relay connector terminal 87 and the main cooling fan connector terminal B. Is the repair complete?	-	System OK	-
49	Repair the open wire between the series/parallel cooling fan relay connector terminal 86 and the ECM connector terminal A14. Is the repair complete?	-	System OK	-

BLANK

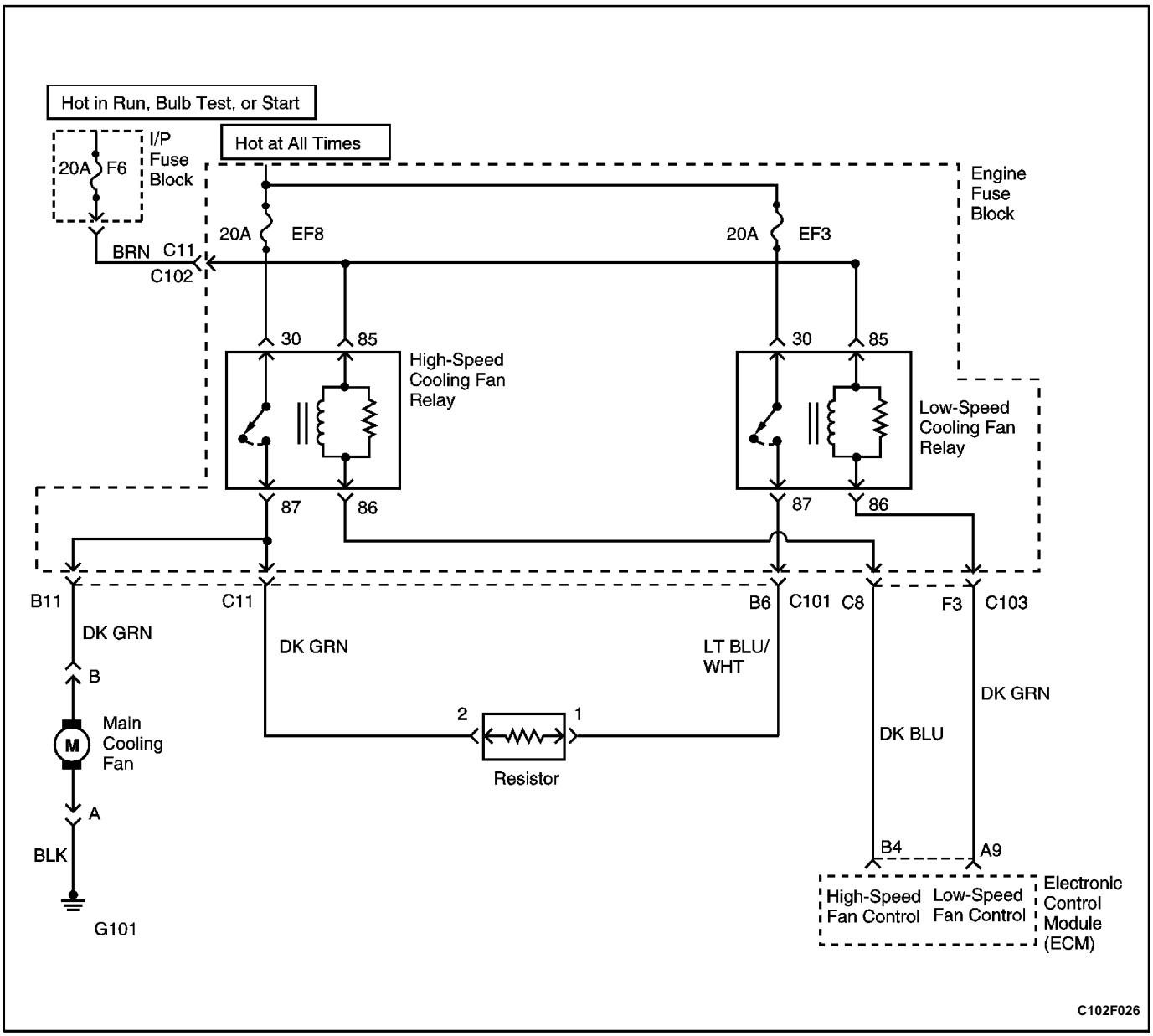

ENGINE COOLING FAN CIRCUIT CHECK - WITHOUT A/C (2.0L SOHC)

Circuit Description

The engine cooling fan circuit operates the main cooling fan and the auxiliary cooling fan. The cooling fans are controlled by the electronic control module (ECM) based on inputs from the coolant temperature sensor (CTS) and the air conditioning pressure (ACP) sensor. The ECM controls the low speed cooling fan operation by internally grounding the ECM connector terminal A9. This energizes the low speed cooling fan relay and operates the main cooling fan and the auxiliary cooling fan at low speed as the cooling fans are connected in a series circuit. The ECM controls the high speed cooling fan operation by internally grounding the ECM connector terminal A9 and the ECM connector terminal B4 at the same time. This energizes the low speed cooling fan relay, the high speed cooling fan relay, and the series/parallel cooling fan relay resulting in high speed fan operation as the cooling fans are now connected in a parallel circuit.

Diagnostic Aids

- ✳ If the owner complained of an overheating problem, it must be determined if the complaint was due to an actual boil over, or the engine coolant temperature gauge indicated overheating. If the engine is overheating and the cooling fans are on, the cooling system should be checked.
- ✳ If the engine fuse block fuses EF3 or EF8 become open (blown) immediately after installation, inspect for a short to ground in the wiring of the appropriate circuit. If the fuses become open (blown) when the cooling fans are to be turned on by the electronic control module (ECM), suspect a faulty cooling fan motor.
- ✳ The ECM will turn the cooling fans on at low speed when the coolant temperature is 96°C (205°F). The ECM will turn the cooling fans off when the coolant temperature is 93°C (199°F).

✳ The ECM will turn the cooling fans on at high speed when the coolant temperature is 100°C (212°F). The ECM will change the cooling fans from high speed to low speed when the coolant temperature is 97°C (207°F).

✳ The cooling fan circuit can be checked quickly by disconnecting the ECM red connector and grounding the connector terminal A9. This should create low speed cooling fan operation with the ignition ON. By grounding the ECM connector terminals A9 and B4 and turning the ignition ON, high speed cooling fan operation should be achieved.

Test Description

The number(s) below refer to step(s) on the diagnostic table.

4. This step, along with step 5, checks for the ability of the electronic control module (ECM) to operate the cooling fans.

8. This step, along with step 9, checks for the ability of the ECM to operate the cooling fans in response to A/C pressure readings.

16. After confirming battery voltage and the ECM supplying a ground to the coil side of the low speed cooling fan relay, by jumpering connector terminals 30 and 87 it will be determined if the relay is at fault or a wiring problem is present.

31. This step checks for the presence of battery voltage to the main cooling fan when the A/C is on. If battery voltage is present and the cooling fans are not operating, the problem is in the ground side of the cooling fan circuit.

37. By directly grounding the ECM connector terminals A9 and B4, the main and auxiliary cooling fans should run at high speed.

Engine Cooling Fan Circuit Check - Without A/C (2.0L SOHC)

Step	Action	Value(s)	Yes	No
1	Was the Diagnostic System Check performed?	-	Go to *Step 2*	Go to "Diagnostic System Check"
2	1. Check the engine fuse block fuse EF3. 2. Replace the fuse as needed. Is the fuse OK?	-	Go to *Step 3*	Go to "Diagnostic Aids"
3	1. Check the engine fuse block fuse EF8. 2. Replace the fuse as needed. Is the fuse OK?	-	Go to *Step 4*	Go to "Diagnostic Aids"
4	1. Turn the ignition OFF. 2. Connect a scan tool to the assembly line diagnostic link (ALDL). 3. Start the engine. 4. The cooling fans should run at low speed when the coolant temperature reaches 96°C (207°F). Do the cooling fans run at low speed?	-	Go to *Step 5*	Go to *Step 6*
5	1. Turn the ignition OFF. 2. Connect a scan tool to the ALDL. 3. Start the engine. 4. The cooling fans should run at high speed when the coolant temperature reaches 100°C (214°F). Do the cooling fans run at high speed?	-	System OK	Go to *Step 27*

Engine Cooling Fan Circuit Check - Without A/C (2.0L SOHC) (Cont'd)

Step	Action	Value(s)	Yes	No
6	1. Turn the ignition OFF. 2. Connect a scan tool to the ALDL. 3. The coolant temperature should be above 96°C (205°C). 4. Disconnect the auxiliary cooling fan connector. 5. Turn the ignition ON. 6. Connect a test light between the auxiliary cooling fan connector terminal B and ground. Is the test light on?	-	Go to *Step 7*	Go to *Step 8*
7	1. Turn the ignition OFF. 2. Connect a scan tool to the ALDL. 3. The coolant temperature should be above 96°C (205°C). 4. Disconnect the auxiliary cooling fan connector. 5. Connect a test light between the auxiliary cooling fan connector terminal A and battery positive. Is the test light on?	-	Go to *Step 24*	Go to *Step 13*
8	1. Turn the ignition OFF. 2. Disconnect the low speed cooling fan relay. 3. Connect a test light between the low speed cooling fan relay connector terminal 85 and ground. 4. Turn the ignition ON. Is the test light on?	-	Go to *Step 9*	Go to *Step 20*
9	1. Turn the ignition OFF. 2. Connect the low speed cooling fan relay. 3. Disconnect the electronic control module (ECM) red connector. 4. Connect a fused jumper between the ECM connector terminal A9 and ground. 5. Turn the ignition ON. Do the cooling fans run at low speed?	-	Go to *Step 26*	Go to *Step 10*
10	Check for an open wire between the low speed cooling fan relay connector terminal 86 and the ECM connector terminal A9. Is the problem found?	-	Go to *Step 21*	Go to *Step 11*
11	1. Turn the ignition OFF. 2. Disconnect the low speed cooling fan relay. 3. Connect a test light between the low speed cooling fan relay connector terminal 30 and ground. Is the test light on?	-	Go to *Step 12*	Go to *Step 19*
12	Connect a fused jumper between the low speed cooling fan relay connector terminals 30 and 87. Do the cooling fans run at low speed?	-	Go to *Step 22*	Go to *Step 13*

Engine Cooling Fan Circuit Check - Without A/C (2.0L SOHC) (Cont'd)

Step	Action	Value(s)	Yes	No
13	1. Disconnect the series/parallel cooling fan relay. 2. Connect a fused jumper between the low speed cooling fan relay connector terminals 30 and 87. 3. Connect a fused jumper between the series/parallel cooling fan relay connector terminals 30 and 87. Do the cooling fans run at low speed?	-	Go to *Step 23*	Go to *Step 14*
14	Check the wire between the low speed cooling fan relay connector terminal 87 to the auxiliary cooling fan connector terminal B for an open. Is the problem found?	-	Go to *Step 18*	Go to *Step 15*
15	Check the wire between the auxiliary cooling fan connector terminal A and the series/parallel cooling fan relay connector terminal 30 for an open. Is the problem found?	-	Go to *Step 18*	Go to *Step 16*
16	Check the wire between the series/parallel cooling fan relay connector terminal 87 and the main cooling fan connector terminal B for an open. Is the problem found?	-	Go to *Step 18*	Go to *Step 17*
17	Check for an open wire between the main cooling fan connector terminal A and ground. Is the problem found?	-	Go to *Step 18*	Go to *Step 25*
18	Repair the open wire as needed. Is the repair complete?	-	System OK	-
19	Repair the open between the low speed cooling fan relay connector terminal 30 and the battery. Is the repair complete?	-	System OK	-
20	Repair the open between the low speed cooling fan relay connector terminal 85 and the ignition switch. Is the repair complete?	-	System OK	-
21	Repair the open wire between the low speed cooling fan relay connector terminal 86 and the ECM connector terminal A9. Is the repair complete?	-	System OK	-
22	Replace the low speed cooling fan relay. Is the repair complete?	-	System OK	-
23	Replace the series/parallel cooling fan relay. Is the repair complete?	-	System OK	-
24	Replace the auxiliary cooling fan. Is the repair complete?	-	System OK	-
25	Replace the main cooling fan. Is the repair complete?	-	System OK	-
26	Replace the ECM. Is the repair complete?	-	System OK	-

Engine Cooling Fan Circuit Check - Without A/C (2.0L SOHC) (Cont'd)

Step	Action	Value(s)	Yes	No
27	1. Turn the ignition OFF. 2. Disconnect the high speed cooling fan relay. 3. Connect a test light between the high speed cooling fan relay connector terminal 85 and ground. 4. Turn the ignition ON. Is the test light on?	-	Go to *Step 28*	Go to *Step 38*
28	1. Turn the ignition OFF. 2. Connect a test light between the high speed cooling fan relay connector terminal 30 and ground. Is the test light on?	-	Go to *Step 29*	Go to *Step 39*
29	1. Disconnect the series/parallel cooling fan relay. 2. Connect a test light between the series/parallel cooling fan relay connector terminal 85 and ground. 3. Turn the ignition ON. Is the test light on?	-	Go to *Step 30*	Go to *Step 40*
30	1. Turn the ignition OFF. 2. Connect a test light between the series/parallel cooling fan relay connector terminal 87 and battery positive. Is the test light on?	-	Go to *Step 31*	Go to *Step 41*
31	1. Connect the auxiliary cooling fan connector. 2. Connect the high speed cooling fan relay. 3. Connect the series/parallel cooling fan relay. 4. Disconnect the ECM red connector. 5. Connect a fused jumper between the ECM connector terminal A9 and ground. 6. Connect a fused jumper between the ECM connector terminal B4 and ground. 7. Turn the ignition ON. Do the cooling fans run at high speed?	-	Go to *Step 26*	Go to *Step 32*
32	1. Turn the ignition OFF. 2. Check for an open wire between the high speed cooling fan relay connector terminal 86 and the ECM connector terminal B4. Is the problem found?	-	Go to *Step 18*	Go to *Step 33*
33	1. Disconnect the high speed cooling fan relay. 2. Connect a test light between the high speed cooling fan relay connector terminal 87 and battery positive. Is the test light on?	-	Go to *Step 34*	Go to *Step 42*
34	1. Disconnect the ECM red connector. 2. Connect a fused jumper between the ECM connector terminal B4 and ground. 3. Disconnect the series/parallel cooling fan relay. 4. Connect a test light between the series/parallel cooling fan relay connector terminal 86 and battery positive. Is the test light on?	-	Go to *Step 35*	Go to *Step 43*

Engine Cooling Fan Circuit Check - Without A/C (2.0L SOHC) (Cont'd)

Step	Action	Value(s)	Yes	No
35	1. Connect the series/parallel cooling fan relay. 2. Connect a fused jumper between the ECM connector terminal B4 and ground. 3. Disconnect the high speed cooling fan relay. 4. Connect a fused jumper between the high speed cooling fan relay connector terminals 30 and 87. 5. Disconnect the low speed cooling fan relay. 6. Connect a fused jumper between the low speed cooling fan relay connector terminals 30 and 87. 7. Turn the ignition ON. Do the cooling fans run at high speed?	-	Go to *Step 37*	Go to *Step 36*
36	1. Turn the ignition OFF. 2. Connect a fused jumper between the ECM connector terminal B4 and ground. 3. Disconnect the series/parallel cooling fan relay. 4. Connect a fused jumper between the series/parallel cooling fan relay connector terminals 30 and 87. 5. Connect a fused jumper between the low speed cooling fan relay connector terminals 30 and 87. 6. Turn the ignition ON. Do the cooling fans run at high speed?	-	Go to *Step 23*	-
37	Replace the high speed cooling fan relay. Is the repair complete?	-	System OK	-
38	Repair the open wire between the high speed cooling fan relay connector terminal 85 and the ignition switch. Is the repair complete?	-	System OK	-
39	Repair the open wire between the high speed cooling fan relay connector terminal 30 and the battery. Is the repair complete?	-	System OK	-
40	Repair the open wire between the series/parallel cooling fan relay connector terminal 85 and the ignition switch. Is the repair complete?	-	System OK	-
41	Repair the open wire between the series/parallel cooling fan relay connector terminal 87 and ground. Is the repair complete?	-	System OK	-
42	Repair the open wire between the high speed cooling fan relay connector terminal 87 and the main cooling fan connector terminal B. Is the repair complete?	-	System OK	-
43	Repair the open wire between the series/parallel cooling fan relay connector terminal 86 and the ECM connector terminal B4. Is the repair complete?	-	System OK	-

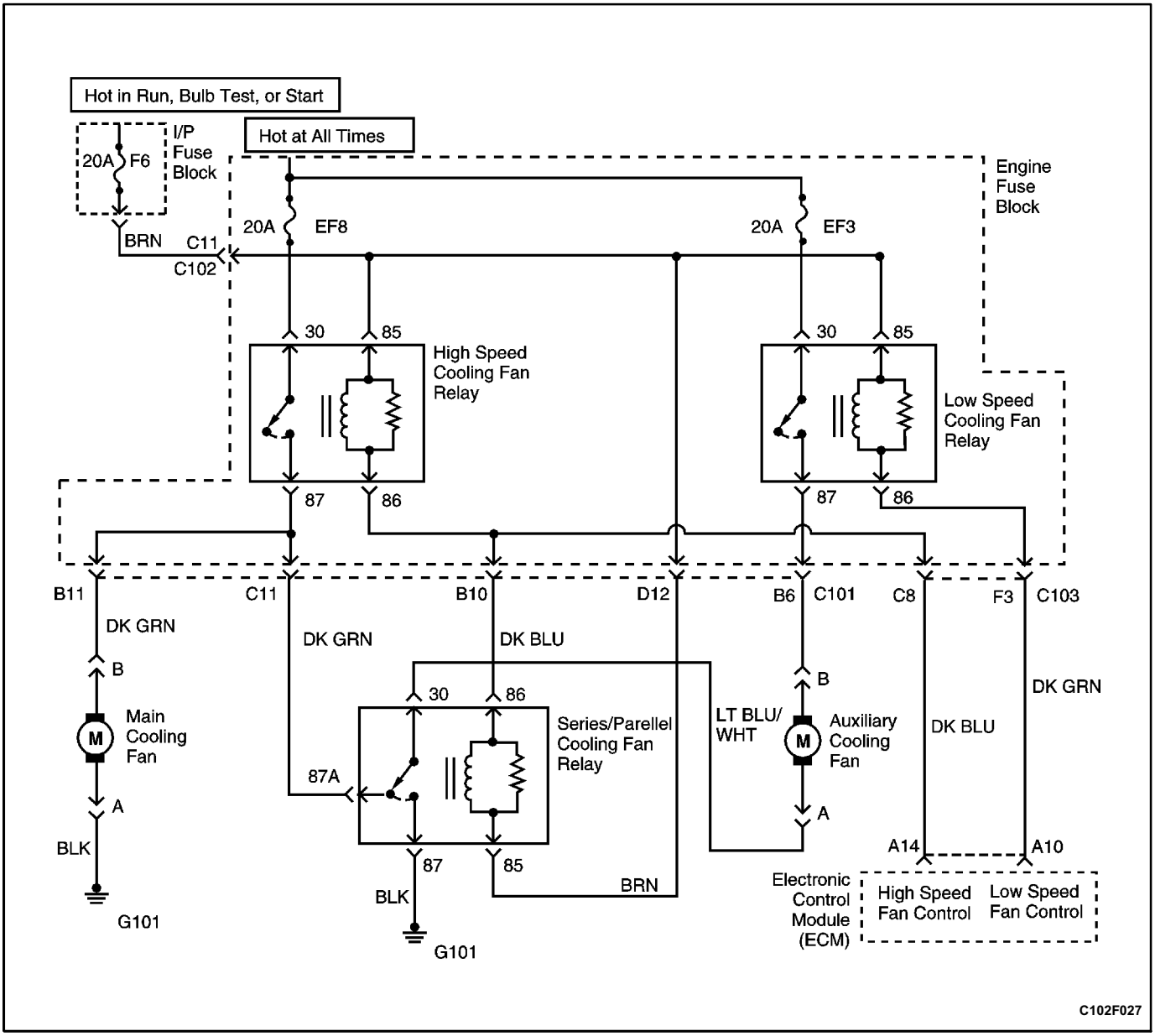

ENGINE COOLING FAN CIRCUIT CHECK - WITHOUT A/C (2.0L DOHC)

Circuit Description

The engine cooling fan circuit operates the main cooling fan and the auxiliary cooling fan. The cooling fans are controlled by the electronic control module (ECM) based on inputs from the coolant temperature sensor (CTS) and the air conditioning pressure (ACP) sensor. The ECM controls the low speed cooling fan operation by internally grounding the ECM connector terminal A10. This energizes the low speed cooling fan relay and operates the main cooling fan and the auxiliary cooling fan at low speed as the cooling fans are connected in a series circuit. The ECM controls the high speed cooling fan operation by internally grounding the ECM connector terminal A10 and the ECM connector terminal A14 at the same time. This energizes the low speed cooling fan relay, the high speed cooling fan relay, and the series/parallel cooling fan relay resulting in high speed fan operation as the cooling fans are now connected in a parallel circuit.

Diagnostic Aids

- ✳ If the owner complained of an overheating problem, it must be determined if the complaint was due to an actual boil over, or the engine coolant temperature gauge indicated overheating. If the engine is overheating and the cooling fans are on, the cooling system should be checked.
- ✳ If the engine fuse block fuses EF3 or EF8 become open (blown) immediately after installation, inspect for a short to ground in the wiring of the appropriate circuit. If the fuses become open (blown) when the cooling fans are to be turned on by the electronic control module (ECM), suspect a faulty cooling fan motor.
- ✳ The ECM will turn the cooling fans on at low speed when the coolant temperature is 93°C (199°F). The ECM will turn the cooling fans off when the coolant temperature is 90°C (194°F).

✳ The ECM will turn the cooling fans on at high speed when the coolant temperature is 97°C (207°F). The ECM will change the cooling fans from high speed to low speed when the coolant temperature is 94°C (201°F).

✳ The cooling fan circuit can be checked quickly by disconnecting the ECM red connector and grounding the connector terminal A10. This should create low speed cooling fan operation with the ignition ON. By grounding the ECM connector terminals A10 and A14 and turning the ignition ON, high speed cooling fan operation should be achieved.

Test Description

The number(s) below refer to step(s) on the diagnostic table.

4. This step, along with step 5, checks for the ability of the electronic control module (ECM) to operate the cooling fans.

8. This step, along with step 9, checks for the ability of the ECM to operate the cooling fans in response to A/C pressure readings.

16. After confirming battery voltage and the ECM supplying a ground to the coil side of the low speed cooling fan relay, by jumpering connector terminals 30 and 87 it will be determined if the relay is at fault or a wiring problem is present.

31. This step checks for the presence of battery voltage to the main cooling fan when the A/C is on. If battery voltage is present and the cooling fans are not operating, the problem is in the ground side of the cooling fan circuit.

37. By directly grounding the ECM connector terminals A10 and A14, the main and auxiliary cooling fans should run at high speed.

Engine Cooling Fan Circuit Check - Without A/C (2.0L DOHC)

Step	Action	Value(s)	Yes	No
1	Was the Diagnostic System Check performed?	-	Go to *Step 2*	Go to "Diagnostic System Check"
2	1. Check the engine fuse block fuse EF3. 2. Replace the fuse as needed. Is the fuse OK?	-	Go to *Step 3*	Go to "Diagnostic Aids"
3	1. Check the engine fuse block fuse EF8. 2. Replace the fuse as needed. Is the fuse OK?	-	Go to *Step 4*	Go to "Diagnostic Aids"
4	1. Turn the ignition OFF. 2. Connect a scan tool to the assembly line diagnostic link (ALDL). 3. Start the engine. 4. The cooling fans should run at low speed when the coolant temperature reaches 93°C (199°F). Do the cooling fans run at low speed?	-	Go to *Step 5*	Go to *Step 6*
5	1. Turn the ignition OFF. 2. Connect a scan tool to the ALDL. 3. Start the engine. 4. The cooling fans should run at high speed when the coolant temperature reaches 97°C (207°F). Do the cooling fans run at high speed?	-	System OK	Go to *Step 27*

Engine Cooling Fan Circuit Check - Without A/C (2.0L DOHC) (Cont'd)

Step	Action	Value(s)	Yes	No
6	1. Turn the ignition OFF. 2. Connect a scan tool to the ALDL. 3. The coolant temperature should be above 93°C (199°F). 4. Disconnect the auxiliary cooling fan connector. 5. Turn the ignition ON. 6. Connect a test light between the auxiliary cooling fan connector terminal B and ground. Is the test light on?	-	Go to *Step 7*	Go to *Step 8*
7	1. Turn the ignition OFF. 2. Connect a scan tool to the ALDL. 3. The coolant temperature should be above 93°C (199°F). 4. Disconnect the auxiliary cooling fan connector. 5. Connect a test light between the auxiliary cooling fan connector terminal A and battery positive. Is the test light on?	-	Go to *Step 24*	Go to *Step 13*
8	1. Turn the ignition OFF. 2. Disconnect the low speed cooling fan relay. 3. Connect a test light between the low speed cooling fan relay connector terminal 85 and ground. 4. Turn the ignition ON. Is the test light on?	-	Go to *Step 9*	Go to *Step 20*
9	1. Turn the ignition OFF. 2. Connect the low speed cooling fan relay. 3. Disconnect the electronic control module (ECM) red connector. 4. Connect a fused jumper between the ECM connector terminal A10 and ground. 5. Turn the ignition ON. Do the cooling fans run at low speed?	-	Go to *Step 26*	Go to *Step 10*
10	Check for an open wire between the low speed cooling fan relay connector terminal 86 and the ECM connector terminal A10. Is the problem found?	-	Go to *Step 21*	Go to *Step 11*
11	1. Turn the ignition OFF. 2. Disconnect the low speed cooling fan relay. 3. Connect a test light between the low speed cooling fan relay connector terminal 30 and ground. Is the test light on?	-	Go to *Step 12*	Go to *Step 19*
12	Connect a fused jumper between the low speed cooling fan relay connector terminals 30 and 87. Do the cooling fans run at low speed?	-	Go to *Step 22*	Go to *Step 13*

Engine Cooling Fan Circuit Check - Without A/C (2.0L DOHC) (Cont'd)

Step	Action	Value(s)	Yes	No
13	1. Disconnect the series/parallel cooling fan relay. 2. Connect a fused jumper between the low speed cooling fan relay connector terminals 30 and 87. 3. Connect a fused jumper between the series/parallel cooling fan relay connector terminals 30 and 87. Do the cooling fans run at low speed?	-	Go to *Step 23*	Go to *Step 14*
14	Check the wire between the low speed cooling fan relay connector terminal 87 to the auxiliary cooling fan connector terminal B for an open. Is the problem found?	-	Go to *Step 18*	Go to *Step 15*
15	Check the wire between the auxiliary cooling fan connector terminal A and the series/parallel cooling fan relay connector terminal 30 for an open. Is the problem found?	-	Go to *Step 18*	Go to *Step 16*
16	Check the wire between the series/parallel cooling fan relay connector terminal 87 and the main cooling fan connector terminal B for an open. Is the problem found?	-	Go to *Step 18*	Go to *Step 17*
17	Check for an open wire between the main cooling fan connector terminal A and ground. Is the problem found?	-	Go to *Step 18*	Go to *Step 25*
18	Repair the open wire as needed. Is the repair complete?	-	System OK	-
19	Repair the open between the low speed cooling fan relay connector terminal 30 and the battery. Is the repair complete?	-	System OK	-
20	Repair the open between the low speed cooling fan relay connector terminal 85 and the ignition switch. Is the repair complete?	-	System OK	-
21	Repair the open wire between the low speed cooling fan relay connector terminal 86 and the ECM connector terminal A10. Is the repair complete?	-	System OK	-
22	Replace the low speed cooling fan relay. Is the repair complete?	-	System OK	-
23	Replace the series/parallel cooling fan relay. Is the repair complete?	-	System OK	-
24	Replace the auxiliary cooling fan. Is the repair complete?	-	System OK	-
25	Replace the main cooling fan. Is the repair complete?	-	System OK	-
26	Replace the ECM. Is the repair complete?	-	System OK	-

Engine Cooling Fan Circuit Check - Without A/C (2.0L DOHC) (Cont'd)

Step	Action	Value(s)	Yes	No
27	1. Turn the ignition OFF. 2. Disconnect the high speed cooling fan relay. 3. Connect a test light between the high speed cooling fan relay connector terminal 85 and ground. 4. Turn the ignition ON. Is the test light on?	-	Go to *Step 28*	Go to *Step 38*
28	1. Turn the ignition OFF. 2. Connect a test light between the high speed cooling fan relay connector terminal 30 and ground. Is the test light on?	-	Go to *Step 29*	Go to *Step 39*
29	1. Disconnect the series/parallel cooling fan relay. 2. Connect a test light between the series/parallel cooling fan relay connector terminal 85 and ground. 3. Turn the ignition ON. Is the test light on?	-	Go to *Step 30*	Go to *Step 40*
30	1. Turn the ignition OFF. 2. Connect a test light between the series/parallel cooling fan relay connector terminal 87 and battery positive. Is the test light on?	-	Go to *Step 31*	Go to *Step 41*
31	1. Connect the auxiliary cooling fan connector. 2. Connect the high speed cooling fan relay. 3. Connect the series/parallel cooling fan relay. 4. Disconnect the ECM red connector. 5. Connect a fused jumper between the ECM connector terminal A10 and ground. 6. Connect a fused jumper between the ECM connector terminal A14 and ground. 7. Turn the ignition ON. Do the cooling fans run at high speed?	-	Go to *Step 26*	Go to *Step 32*
32	1. Turn the ignition OFF. 2. Check for an open wire between the high speed cooling fan relay connector terminal 86 and the ECM connector terminal A14. Is the problem found?	-	Go to *Step 18*	Go to *Step 33*
33	1. Disconnect the high speed cooling fan relay. 2. Connect a test light between the high speed cooling fan relay connector terminal 87 and battery positive. Is the test light on?	-	Go to *Step 34*	Go to *Step 42*
34	1. Disconnect the ECM red connector. 2. Connect a fused jumper between the ECM connector terminal A14 and ground. 3. Disconnect the series/parallel cooling fan relay. 4. Connect a test light between the series/parallel cooling fan relay connector terminal 86 and battery positive. Is the test light on?	-	Go to *Step 35*	Go to *Step 43*

Engine Cooling Fan Circuit Check - Without A/C (2.0L DOHC) (Cont'd)

Step	Action	Value(s)	Yes	No
35	1. Connect the series/parallel cooling fan relay. 2. Connect a fused jumper between the ECM connector terminal A14 and ground. 3. Disconnect the high speed cooling fan relay. 4. Connect a fused jumper between the high speed cooling fan relay connector terminals 30 and 87. 5. Disconnect the low speed cooling fan relay. 6. Connect a fused jumper between the low speed cooling fan relay connector terminals 30 and 87. 7. Turn the ignition ON. Do the cooling fans run at high speed?	-	Go to *Step 37*	Go to *Step 36*
36	1. Turn the ignition OFF. 2. Connect a fused jumper between the ECM connector terminal A14 and ground. 3. Disconnect the series/parallel cooling fan relay. 4. Connect a fused jumper between the series/parallel cooling fan relay connector terminals 30 and 87. 5. Connect a fused jumper between the low speed cooling fan relay connector terminals 30 and 87. 6. Turn the ignition ON. Do the cooling fans run at high speed?	-	Go to *Step 23*	-
37	Replace the high speed cooling fan relay. Is the repair complete?	-	System OK	-
38	Repair the open wire between the high speed cooling fan relay connector terminal 85 and the ignition switch. Is the repair complete?	-	System OK	-
39	Repair the open wire between the high speed cooling fan relay connector terminal 30 and the battery. Is the repair complete?	-	System OK	-
40	Repair the open wire between the series/parallel cooling fan relay connector terminal 85 and the ignition switch. Is the repair complete?	-	System OK	-
41	Repair the open wire between the series/parallel cooling fan relay connector terminal 87 and ground. Is the repair complete?	-	System OK	-
42	Repair the open wire between the high speed cooling fan relay connector terminal 87 and the main cooling fan connector terminal B. Is the repair complete?	-	System OK	-
43	Repair the open wire between the series/parallel cooling fan relay connector terminal 86 and the ECM connector terminal A14. Is the repair complete?	-	System OK	-

BLANK

FUEL INJECTOR BALANCE TEST

A fuel injector tester is used to energize the injector for a precise amount of time, thus spraying a measured amount of fuel into the intake manifold. This causes a drop in the fuel rail pressure that can be recorded and used to compare each of the fuel injectors. All of the fuel injectors should have the same pressure drop 10 kPa (1.5 psi).

Injector Balance Test Example

Cylinder	1	2	3	4
First Reading	296 kPa (43 psi)	296 kPa (43 psi)	296 kPa (43 psi)	296 kPa (43 psi)
Second Reading	131 kPa (19 psi)	117 kPa (17 psi)	124 kPa (18 psi)	145 kPa (21 psi)
Amount Of Drop	165 kPa (24 psi)	179 kPa (26 psi)	172 kPa (25 psi)	151 kPa (22 psi)
Average Range: 156-176 kPa (22.5-25.5 psi)	Injector OK	Faulty Injector - Too Much Pressure Drop	Injector OK	Faulty Injector - Too Little Pressure Drop

Caution: The fuel system is under pressure. To avoid fuel spillage and the risk of personal injury or fire, it is necessary to relieve the fuel system pressure before disconnecting the fuel lines.

Caution: Do not pinch or restrict nylon fuel lines. Damage to the lines could cause a fuel leak, resulting in possible fire or personal injury.

Notice: In order to prevent flooding of the engine, do not perform the Injector Balance Test more than once (including any retest on faulty fuel injectors) without running the engine.

Test

1. An engine cool down period of 10 minutes is necessary in order to avoid irregular readings due to hot soak fuel boiling.
2. Connect the fuel pressure gauge carefully to avoid any fuel spillage.
3. The fuel pump should run about 2 seconds after the ignition is turned to the ON position. (Except Euro Stage-II).
   - ✳ Use jump wire for Euro Stage-II, connect terminal D12 of C103 to ground for 2 seconds.
4. Insert a clear tube attached to the vent valve of the fuel pressure gauge into a suitable container.
5. Bleed the air from the fuel pressure gauge and hose until all of the air is bled from the fuel pressure gauge.
6. The ignition switch must be in the OFF position at least 10 seconds in order to complete the electronic control module (ECM) shutdown cycle.
7. Turn the ignition ON in order to get the fuel pressure to its maximum level. (Except Euro Stage-II).
   - ✳ For Euro Stage-II, connect the terminal D12 of C103 to ground for 2 seconds.
8. Allow the fuel pressure to stabilize and then record this initial pressure reading. Wait until there is no movement of the needle on the fuel pressure gauge.
9. Follow the manufacturer's instructions for the use of the adapter harness. Energize the fuel injector tester once and note the fuel pressure drop at its lowest point. Record this second reading. Subtract it from the first reading to determine the amount of the fuel pressure drop.
10. Disconnect the fuel injector tester from the fuel injector.
11. After turning the ignition ON (except Euro Stage-II) or connect the terminal D12 of C103 to ground (Euro Stage-II), in order to obtain maximum pressure once again, make a connection at the next fuel injector. Energize the fuel injector tester and record the fuel pressure reading. Repeat this procedure for all the injectors.
12. Retest any of the fuel injectors that the pressure drop exceeds the 10 kPa (1.5 psi) specification.
13. Replace any of the fuel injectors that fail the retest.
14. If the pressure drop of all of the fuel injectors is within 10 kPa (1.5 psi), then the fuel injectors are flowing normally and no replacement should be necessary.
15. Reconnect the fuel injector harness and review the symptom diagnostic tables.

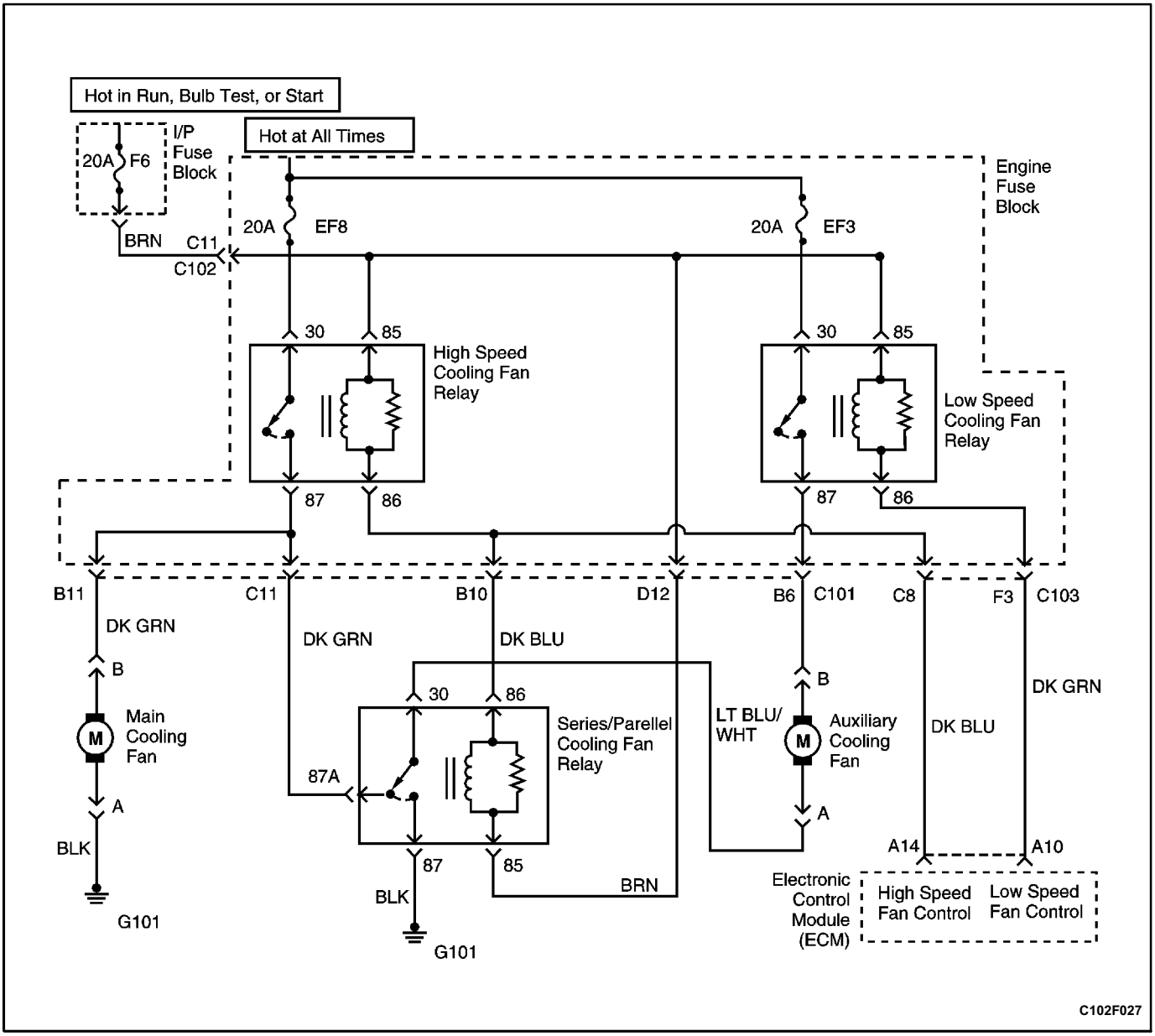

DIAGNOSTIC TROUBLE CODE (DTC) 3 FAN NUMBER TWO LOW (2.0L DOHC)

Circuit Description

The high speed cooling fan relay is controlled by the electronic control module (ECM). The ECM applies a ground to the high speed cooling fan relay, while also applying ground to the low speed cooling fan relay, to achieve high speed cooling fan operation. The ECM determines when to activate the high speed cooling fan relay depending on the coolant temperature and the A/C system high side pressure.

DTC 3 Will Set When

- ✳ A short to ground condition exists.
- ✳ This condition is present for more than 2 seconds.

Diagnostic Aids

- ✳ An intermittent problem may be caused by a poor connection, rubbed through wire insulation, or a broken wire inside the insulation.

Test Description

The number(s) below refer to step(s) on the diagnostic table.

4. This step checks for a shorted relay.
6. This step checks for a shorted relay.
11. This step checks for the ability of the ECM to ground the fan circuits.

DTC 3 - Fan Number Two Low (2.0L DOHC)

Step	Action	Value(s)	Yes	No
1	Determine whether the Diagnostic System Check has been performed. Was the Diagnostic System Check performed?	-	Go to *Step 2*	Go to "Diagnostic System Check"
2	Inspect the fuse F6. Is the fuse in good condition?	-	Go to *Step 4*	Go to *Step 3*
3	1. Replace the fuse. 2. Clear any diagnostic trouble codes (DTCs) from the electronic control module (ECM). 3. Perform the Diagnostic System Check. Is the repair complete?	-	System OK	-
4	1. Disconnect the high speed cooling fan relay. 2. Measure the resistance between the high speed cooling fan relay terminals 85 and 86. Is the circuit shorted to ground?	-	Go to *Step 5*	Go to *Step 6*
5	1. Replace the high speed cooling fan relay. 2. Clear any DTCs from the ECM. 3. Perform the Diagnostic System Check. Is the repair complete?	-	System OK	-
6	1. Disconnect the series/parallel cooling fan relay. 2. Measure the resistance between the series/parallel cooling fan relay terminals 85 and 86. Is the circuit shorted to ground?	-	Go to *Step 7*	Go to *Step 8*
7	1. Replace the series/parallel cooling fan relay. 2. Clear any DTCs from the ECM. 3. Perform the Diagnostic System Check. Is the repair complete?	-	System OK	-
8	Check for a short to ground in the wiring between the high speed cooling fan relay connector terminal 86 and the ECM connector terminal A14. Is the problem found?	-	Go to *Step 10*	Go to *Step 9*
9	Check for a short to ground in the wiring between the series/parallel cooling fan relay connector terminal 86 and ECM connector terminal A14. Is the problem found?	-	Go to *Step 10*	Go to *Step 11*
10	1. Repair the short to ground in the wiring. 2. Clear any DTCs from the ECM. 3. Perform the Diagnostic System Check. Is the repair complete?	-	System OK	-
11	1. Turn the ignition OFF. 2. Connect the high speed cooling fan relay. 3. Connect the series/parallel cooling fan relay. 4. Connect the ECM red connector. 5. Jumper terminals A and B of the assembly line diagnostic link (ALDL) connector. 6. Turn the ignition ON. 7. With a test light connected to battery voltage, backprobe the ECM connector terminal A14. Is the test light on?	-	Go to "Diagnostic Aids"	Go to *Step 12*

DTC 3 - Fan Number Two Low (2.0L DOHC) (Cont'd)

Step	Action	Value(s)	Yes	No
12	1. Turn the ignition OFF. 2. Disconnect the ECM red connector. 3. Inspect for a poor connection at the ECM connector terminal A14. Is the problem found?	-	Go to *Step 13*	Go to *Step 14*
13	1. Repair or replace the connector terminal as needed. 2. Clear any DTCs from the ECM. 3. Perform the Diagnostic System Check. Is the repair complete?	-	System OK	-
14	1. Replace the ECM. 2. Perform the Diagnostic System Check. Is the repair complete?	-	System OK	-

BLANK

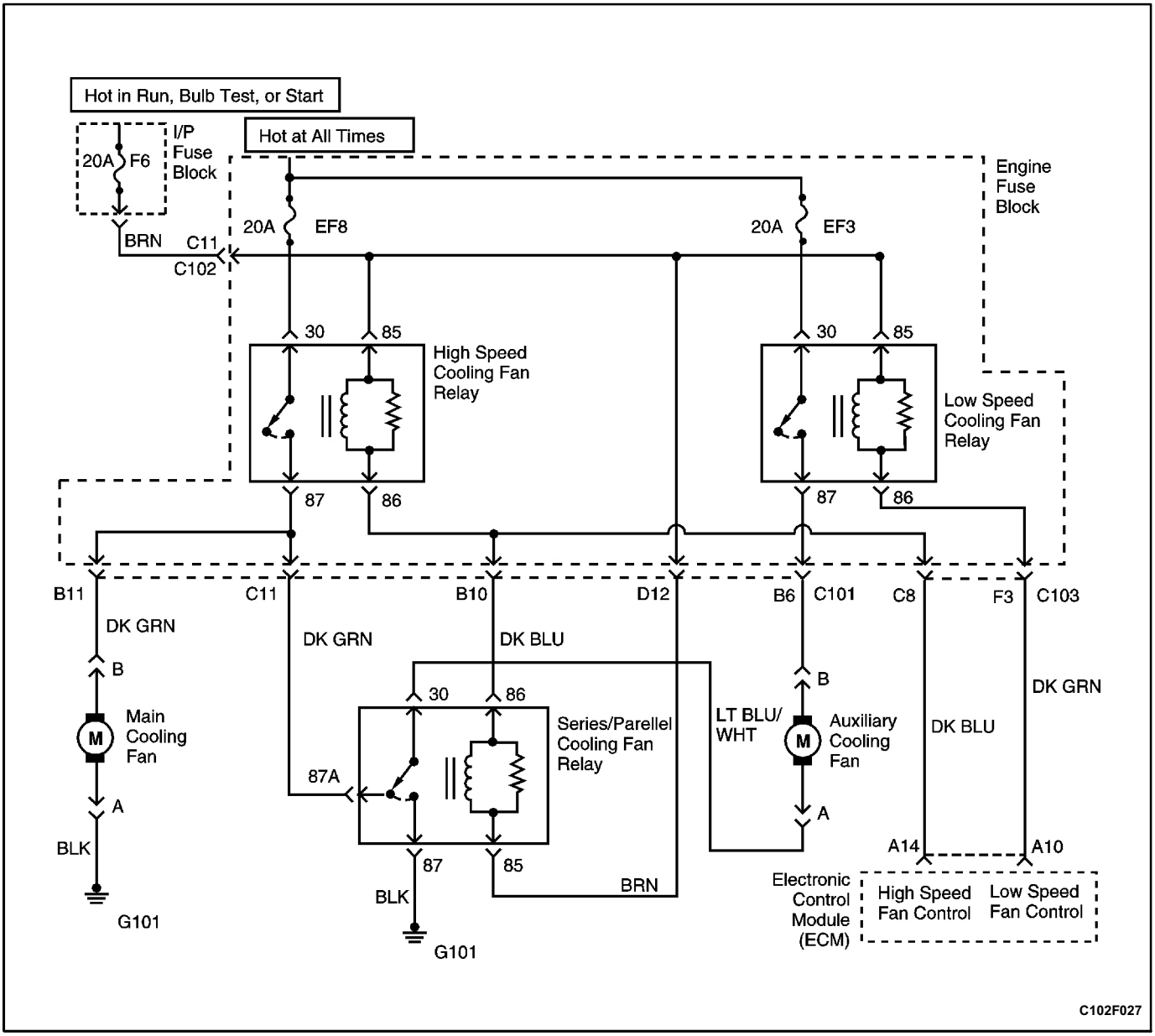

DIAGNOSTIC TROUBLE CODE (DTC) 4 FAN NUMBER TWO HIGH (2.0L DOHC)

Circuit Description

The high speed cooling fan relay is controlled by the electronic control module (ECM). The ECM applies a ground to the high speed cooling fan relay, while also applying ground to the low speed cooling fan relay, to achieve high speed cooling fan operation. The ECM determines when to activate the high speed cooling fan relay depending on the coolant temperature and the A/C system high side pressure.

DTC 4 Will Set When

✳ A short to battery voltage condition exists.

✳ This condition is present for more than 2 seconds.

Diagnostic Aids

✳ An intermittent problem may be caused by a poor connection, rubbed through wire insulation, or a broken wire inside the insulation.

Test Description

The number(s) below refer to step(s) on the diagnostic table.

2. This step checks the wires for a short to battery voltage.
4. This step checks for a shorted relay.
6. This step checks for a shorted relay.

DTC 4 - Fan Number Two High (2.0L DOHC)

Step	Action	Value(s)	Yes	No
1	Determine whether the Diagnostic System Check has been performed. Was the Diagnostic System Check performed?	-	Go to *Step 2*	Go to "Diagnostic System Check"
2	1. Disconnect the electronic control module (ECM) red connector. 2. Disconnect the high speed cooling fan relay and the series/parallel cooling fan relay. 3. Measure the voltage between the ECM connector terminal A14 and ground. Does the voltage measure within the value specified?	0 V	Go to *Step 4*	Go to *Step 3*
3	1. Repair the short to voltage between the high speed cooling fan relay or the series/parallel cooling fan relay connector terminal 86 and the ECM connector terminal A14. 2. Clear any diagnostic trouble codes (DTCs) from the ECM. 3. Perform the Diagnostic System Check. Is the repair complete?	-	System OK	-
4	Measure the resistance between the high speed cooling fan relay terminals 85 and 86. Does the resistance measure near the value specified?	≈ 0 Ω	Go to *Step 5*	Go to *Step 6*
5	1. Replace the high speed cooling fan relay. 2. Clear any DTCs from the ECM. 3. Perform the Diagnostic System Check. Is the repair complete?	-	System OK	-
6	Measure the resistance between the series/parallel cooling fan relay terminals 85 and 86. Does the resistance measure near the value specified?	≈ 0 Ω	Go to *Step 7*	Go to *Step 8*
7	1. Replace the series/parallel cooling fan relay. 2. Clear any DTCs from the ECM. 3. Perform the Diagnostic System Check. Is the repair complete?	-	System OK	-
8	Inspect for a poor connection at the ECM connector terminal A14. Is the problem found?	-	Go to *Step 9*	Go to *Step 10*
9	1. Repair or replace the connector terminal as needed. 2. Clear any DTCs from the ECM. 3. Perform the Diagnostic System Check. Is the repair complete?	-	System OK	-
10	1. Replace the ECM. 2. Perform the Diagnostic System Check. Is the repair complete?	-	System OK	-

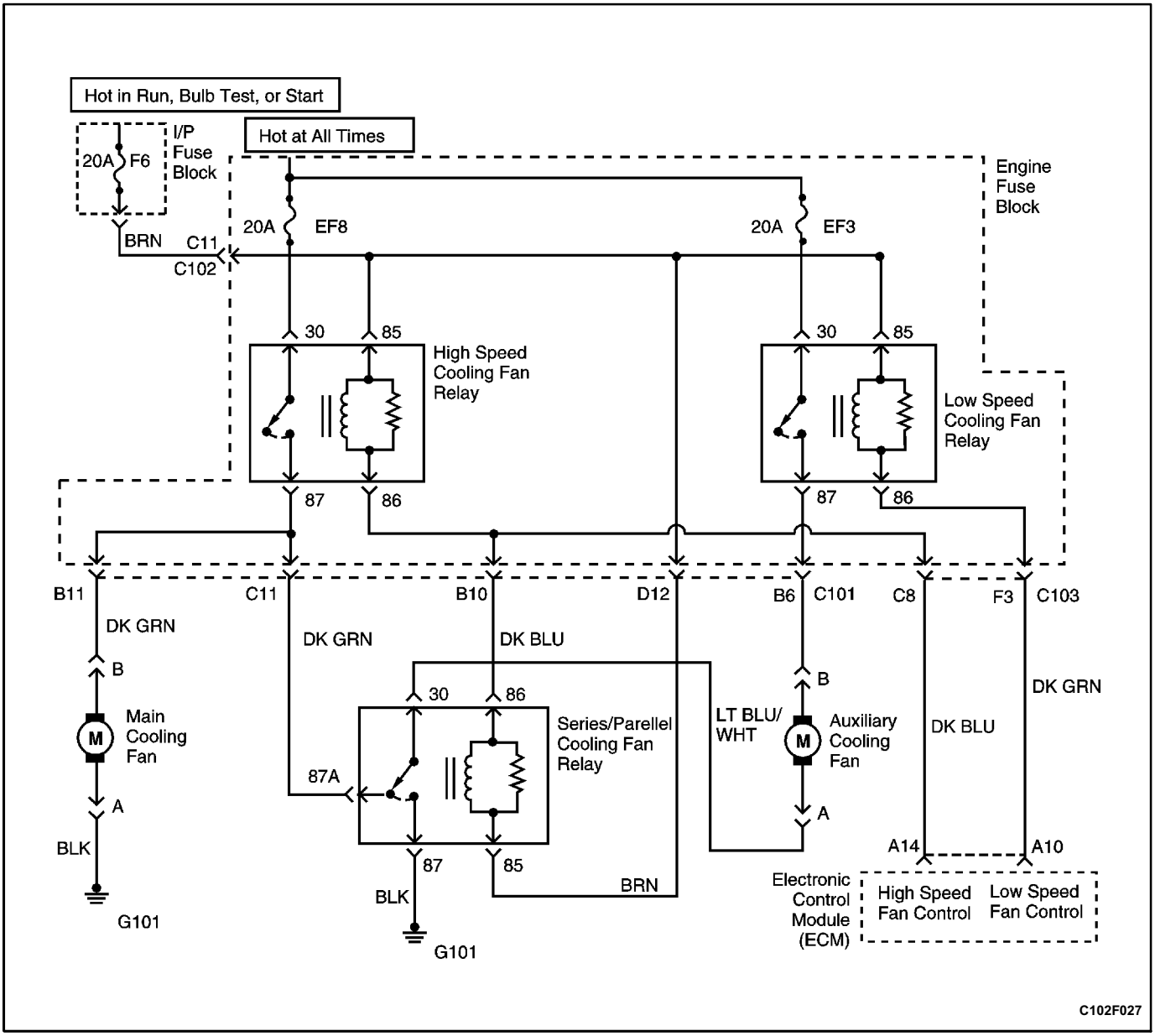

DIAGNOSTIC TROUBLE CODE (DTC) 5 FAN NUMBER ONE LOW (2.0L DOHC)

Circuit Description

The low speed cooling fan relay is controlled by the electronic control module (ECM). The ECM applies a ground to the low speed cooling fan relay to achieve low speed cooling fan operation. The ECM determines when to activate the low speed cooling fan relay depending on the coolant temperature and the A/C system high side pressure.

DTC 5 Will Set When

✳ A short to ground condition exists.

✳ This condition is present for more than 2 seconds.

Diagnostic Aids

✳ An intermittent problem may be caused by a poor connection, rubbed through wire insulation, or a broken wire inside the insulation.

Test Description

The number(s) below refer to step(s) on the diagnostic table.

4. This step checks for a shorted relay.
8. This step checks for the ability of the ECM to ground the fan circuits.

DTC 5 - Fan Number One Low (2.0L DOHC)

Step	Action	Value(s)	Yes	No
1	Determine whether the Diagnostic System Check has been performed. Was the Diagnostic System Check performed?	-	Go to *Step 2*	Go to "Diagnostic System Check"
2	Inspect the fuse F6. Is the fuse in good condition?	-	Go to *Step 4*	Go to *Step 3*
3	1. Replace the fuse. 2. Clear any diagnostic trouble codes (DTCs) from the electronic control module (ECM). 3. Perform the Diagnostic System Check. Is the repair complete?	-	System OK	-
4	1. Disconnect the low speed cooling fan relay. 2. Measure the resistance between the low speed cooling fan relay terminals 85 and 86. Is the circuit shorted to ground?	-	Go to *Step 5*	Go to *Step 6*
5	1. Replace the low speed cooling fan relay. 2. Clear any DTCs from the ECM. 3. Perform the Diagnostic System Check. Is the repair complete?	-	System OK	-
6	Check for a short to ground in the wiring between the low speed cooling fan relay connector terminal 86 and the ECM connector terminal A10. Is the problem found?	-	Go to *Step 7*	Go to *Step 8*
7	1. Repair the short to ground in the wiring. 2. Clear any DTCs from the ECM. 3. Perform the Diagnostic System Check. Is the repair complete?	-	System OK	-
8	1. Turn the ignition OFF. 2. Connect the low speed cooling fan relay. 3. Connect the ECM red connector. 4. Jumper terminals A and B of the assembly line diagnostic link (ALDL) connector. 5. Turn the ignition ON. 6. With a test light connected to battery voltage, backprobe the ECM connector terminal A10. Is the test light on?	-	Go to "Diagnostic Aids"	Go to *Step 9*
9	1. Turn the ignition OFF. 2. Disconnect the ECM red connector. 3. Inspect for a poor connection at the ECM connector terminal A10. Is the problem found?	-	Go to *Step 10*	Go to *Step 11*
10	1. Repair or replace the connector terminal as needed. 2. Clear any DTCs from the ECM. 3. Perform the Diagnostic System Check. Is the repair complete?	-	System OK	-
11	1. Replace the ECM. 2. Perform the Diagnostic System Check. Is the repair complete?	-	System OK	-

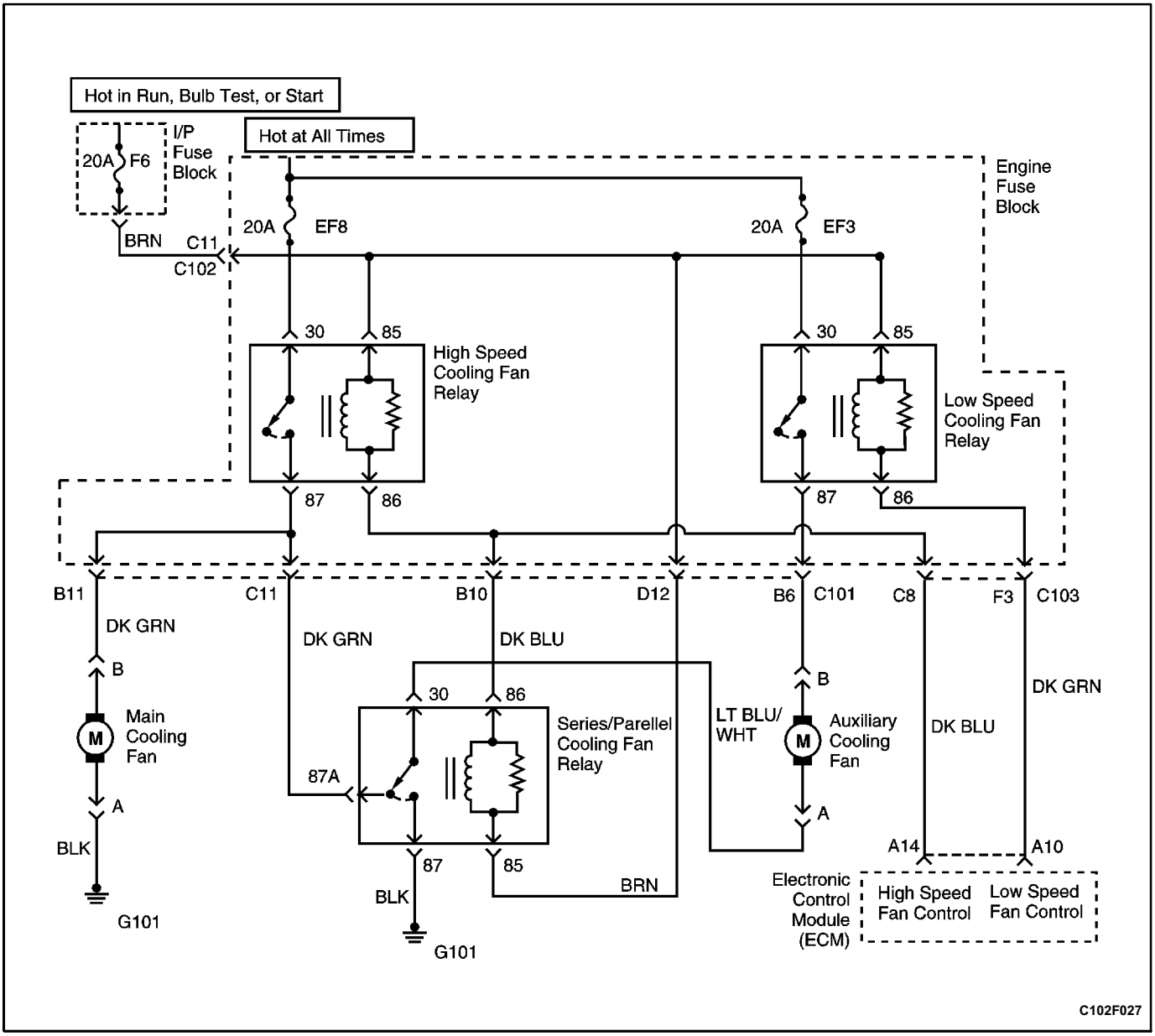

DIAGNOSTIC TROUBLE CODE (DTC) 6 FAN NUMBER ONE HIGH (2.0L DOHC)

Circuit Description

The low speed cooling fan relay is controlled by the electronic control module (ECM). The ECM applies a ground to the low speed cooling fan relay to achieve low speed cooling fan operation. The ECM determines when to activate the low speed cooling fan relay depending on the coolant temperature and the A/C system high side pressure.

DTC 6 Will Set When

✳ A short to battery voltage condition exists.

✳ This condition is present for than 2 seconds.

Diagnostic Aids

✳ An intermittent problem may be caused by a poor connection, rubbed through wire insulation, or a broken wire inside the insulation.

Test Description

The number(s) below refer to step(s) on the diagnostic table.

2. This step checks the wires for a short to battery voltage.
4. This step checks for a shorted relay.

DTC 6 - Fan Number Two High (2.0L DOHC)

Step	Action	Value(s)	Yes	No
1	Determine whether the Diagnostic System Check has been performed. Was the Diagnostic System Check performed?	-	Go to *Step 2*	Go to "Diagnostic System Check"
2	1. Disconnect the electronic control module (ECM) red connector. 2. Disconnect the low speed cooling fan relay. 3. Measure the voltage between the ECM connector terminal A10 and ground. Does the voltage measure within the value specified?	0 V	Go to *Step 4*	Go to *Step 3*
3	1. Repair the short to voltage between the low speed cooling fan relay connector terminal 86 and the ECM connector terminal A10. 2. Clear any diagnostic trouble codes (DTCs) from the ECM. 3. Perform the Diagnostic System Check. Is the repair complete?	-	System OK	-
4	Measure the resistance between the low speed cooling fan relay terminals 85 and 86. Does the resistance measure near the value specified?	≈ 0 Ω	Go to *Step 5*	Go to *Step 6*
5	1. Replace the low speed cooling fan relay. 2. Clear any DTCs from the ECM. 3. Perform the Diagnostic System Check. Is the repair complete?	-	System OK	-
6	Inspect for a poor connection at the ECM connector terminal A10. Is the problem found?	-	Go to *Step 7*	Go to *Step 8*
7	1. Repair or replace the connector terminal as needed. 2. Clear any DTCs from the ECM. 3. Perform the Diagnostic System Check. Is the repair complete?	-	System OK	-
8	1. Replace the ECM. 2. Perform the Diagnostic System Check. Is the repair complete?	-	System OK	-

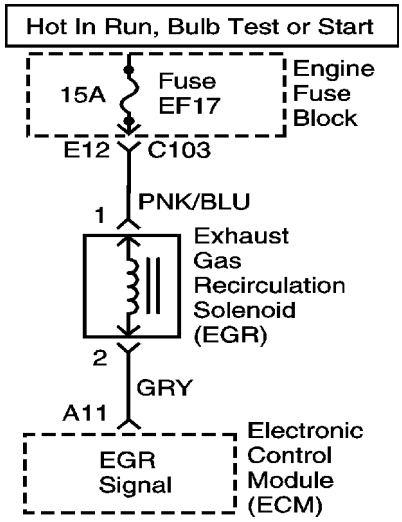

DIAGNOSTIC TROUBLE CODE (DTC) 7 BACK PRESSURE EXHAUST GAS RECIRCULATION ON/OFF SOLENOID LOW (2.0L DOHC)

Circuit Description

The electronic control module (ECM) operates a solenoid to control the back pressure (BP) exhaust gas recirculation (EGR) valve. The solenoid is normally closed. By providing a ground path, the ECM energizes the solenoid, which then allows vacuum to pass to the EGR valve.

The ECM monitors EGR effectiveness by deenergizing the EGR solenoid and shutting off vacuum to the EGR valve. With the EGR valve closed and the oxygen sensor fluctuating normally, shortterm fuel trim counts will be greater than they were during normal operation.

DTC 7 Will Set When

✳ A short to ground condition exits.

Diagnostic Aids

✳ Inspect the ECM wiring harness connectors for improper mating, broken locks, improperly formed or damaged terminals, a poor terminaltowire connection, or a damaged harness.

✳ If the connections and the wiring harness are in good condition, connect a test light between the controlled canister purge (CCP) solenoid connector terminal 2 and battery positive while moving related connectors. If the fault is induced, the test light will turn on. This may help to isolate the location of an intermittent problem.

Test Description

The number(s) below refer to step(s) on the diagnostic table.

2. With the ignition OFF, the ECM should not be applyilng ground to the EGR solenoid.
3. If the test light is still on after disconnecting the ECM red connector, the wire between the EGR solenoid and the ECM is shorted to ground. IF the test light goes off, the ECM is at fault.

DTC 7 - Back Pressure Exhaust Gas Recirculation On/OFF Solenoid Law (2.0L DOHC)

Step	Action	Value(s)	Yes	No
1	Determine whether the Diagnostic System Check has been performed. Was the Diagnostic System Check performed?	-	Go to *Step 2*	Go to "Diagnostic System Check"
2	1. Disconnect the exhaust gas recirculation (EGR) solenoid connector. 2. Connect a test light between the EGR solenoid connector terminal 2 and battery positive. Is the test light on?	-	Go to *Step 3*	Go to "Diagnostic System Check"
3	Disconnect the electronic control module (ECM) red connector. Is the test light on?	-	Go to *Step 4*	Go to *Step 5*
4	1. Repair the short to ground in the wire between the EGR solenoid connector terminal 2 and the ECM connector terminal A11. 2. Clear any diagnostic trouble codes (DTCs) from the ECM. 3. Perform the Diagnostic System Check. Is the repair complete?	-	System OK	-
5	1. Replace the ECM. 2. Clear any DTCs from the ECM. 3. Perform the Diagnostic System Check. Is the repair complete?	-	System OK	-

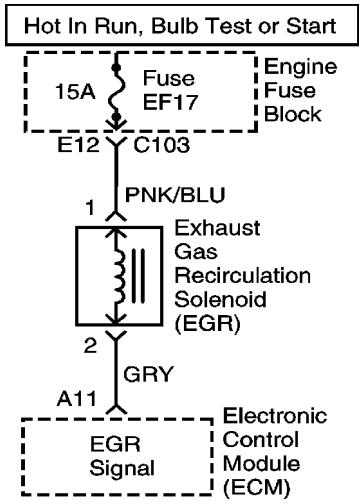

DIAGNOSTIC TROUBLE CODE (DTC) 8 BACK PRESSURE EXHAUST GAS RECIRCULATION ON/OFF SOLENOID LOW (2.0L DOHC)

Circuit Description

The electronic control module (ECM) operates a solenoid to control the back pressure (BP) exhaust gas recirculation (EGR) valve. The solenoid is normally closed. By providing a ground path, the ECM energizes the solenoid, which then allows vacuum to pass to the EGR valve.

The ECM monitors EGR effectiveness by deenergizing the EGR solenoid and shutting off vacuum to the EGR valve. With the EGR valve closed and the oxygen sensor fluctuating normally, shortterm fuel trim counts will be greater than they were during normal operation.

DTC 8 Will Set When

✳ A short to battery voltage condition exits.

Diagnostic Aids

✳ Inspect the ECM wiring harness connectors for improper mating, broken locks, improperly formed or damaged terminals, a poor terminaltowire connection, or a damaged harness.

✳ If the connections and the wiring harness are in good condition, connect a test light between the controlled canister purge (CCP) solenoid connector terminal 2 and battery positive while moving related connectors. If the fault is induced, the test light will turn on. This may help to isolate the location of an intermittent problem.

Test Description

The number(s) below refer to step(s) on the diagnostic table.

4. If the test light is still on after disconnecting the ECM red connector, the wire between the CCP solenoid and the ECM is shorted to voltage. Ifr the test light goes off, the ECM is at fault.

DTC 8 - Back Pressure Exhaust Gas Recirculation On/OFF Solenoid Law (2.0L DOHC)

Step	Action	Value(s)	Yes	No
1	Determine whether the Diagnostic System Check has been performed. Was the Diagnostic System Check performed?	-	Go to *Step 2*	Go to "Diagnostic System Check"
2	1. Disconnect the exhaust gas recirculation (EGR) solenoid connector. 2. Measure the resistance of the EGR solenoid. Does the resistance measure near the value specified?	≈ 0 Ω	Go to *Step 6*	Go to *Step 3*
3	1. Disconnect the EGR solenoid connector. 2. Connect a test light between the EGR solenoid connector terminal 2 and ground. Is the test light on?	-	Go to *Step 4*	Go to "Diagnostic Aids"
4	Disconnect the electronic control module (ECM) red connector. Is the test light on?	-	Go to *Step 5*	Go to *Step 7*
5	1. Repair the short to voltage in the wire between the EGR solenoid connector terminal 2 and the ECM connector terminal A11. 2. Clear any diagnostic trouble codes (DTCs) from the ECM. 3. Perform the Diagnostic System Check. Is the repair complete?	-	System OK	-
6	1. Replace the EGR. 2. Clear any DTCs from the ECM. 3. Perform the Diagnostic System Check. Is the repair complete?	-	System OK	-
7	1. Replace the ECM. 2. Perform the Diagnostic System Check. Is the repair complete?	-	System OK	-

DIAGNOSTIC TROUBLE CODE (DTC) 12 NO PULSE REFERENCE, ENGINE NOT RUNNING (2.0L SOHC IEFI6 AND 2.0L DOHC ITMS6F)

Circuit Description

This is a normal code that the electronic control module (ECM) stores.

DTC 12 Will Set When

✳ The ignition key is ON, but the engine is not running.

Diagnostic Aids

✳ This code indicates a normal condition with no malfunctions.

✳ This code indicates that the ECM has the ability to store codes.

BLANK

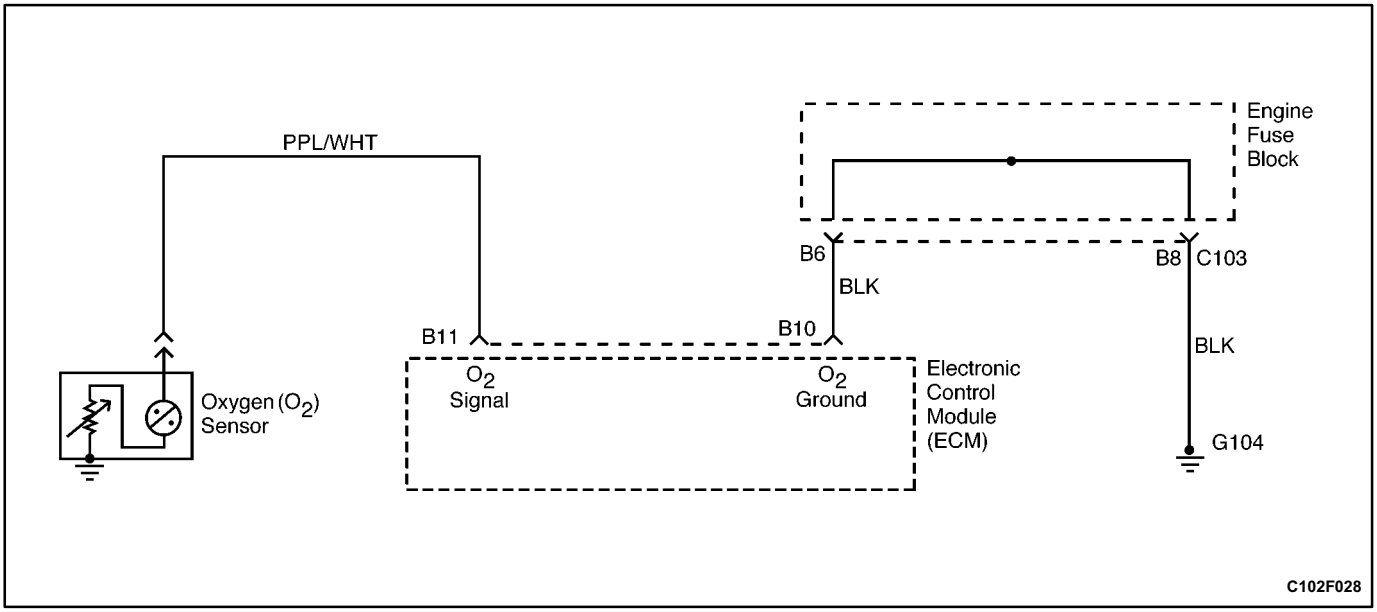

DIAGNOSTIC TROUBLE CODE (DTC) 13
OXYGEN SENSOR NOT TOGGLING (2.0L SOHC)

Circuit Description

The electronic control module (ECM) supplies a voltage of about 450 millivolts between the ECM terminals B11 and B10. The oxygen (O_2) sensor varies the voltage within a range of about 1 volt if the exhaust is rich, down to about 100 millivolts if the exhaust is lean. The O_2 sensor is like an open circuit and produces no voltage when it is below 360°C (600°F). An open O_2 sensor circuit or a cold O_2 sensor causes "open loop" operation.

DTC 13 Will Set When

- The engine has been running for at least 60 seconds.
- Diagnostic trouble code (DTC) 21 has not set.
- DTC 22 has not set.
- DTC 33 has not set.
- DTC 34 has not set.
- The throttle angle is above 5 percent.
- The coolant temperature is above 80°C (176°F).
- The oxygen (O_2) sensor is steady between 350 millivolts and 550 millivolts.
- These conditions are present for 30 seconds.

Diagnostic Aids

Normal scan tool voltage varies between 100 millivolts and 999 millivolts while in closed loop.

Test Description

The number(s) below refer to step(s) on the diagnostic table.

1. If the conditions for the diagnostic trouble code (DTC) 13 are present, the engine controls system will not operate in closed loop.
5. By making a vacuum leak, a lean running condition should now be present. If the oxygen (O_2) sensor toggles below 450 millivolts, the O_2 sensor is sensing the lean running condition.
6. By making a slight vacuum leak at the manifold absolute pressure (MAP) sensor, a rich running condition should now be present. If the O_2 sensor toggles above 550 millivolts, the O_2 sensor is sensing the rich running condition.
10. An open or short to ground in the O_2 sensor circuit will not allow the ECM to operate in closed loop.

DTC 13 - Oxygen Sensor Not Toggling (2.0L SOHC)

Step	Action	Value(s)	Yes	No
1	Was the Diagnostic System Check performed?	-	Go to *Step 2*	Go to "Diagnostic System Check"
2	1. Connect the scan tool to the assembly line diagnostic link (ALDL). 2. Start the engine. 3. Run the engine until it reaches operating temperature. 4. Check for closed loop operation. Does the electronic control module (ECM) go into closed loop?	-	Go to *Step 3*	Go to *Step 8*
3	1. Run the engine until it reaches operating temperature. 2. Check the oxygen (O_2) sensor reading at different throttle settings. Does the scan tool read the O_2 sensor input toggling between the values specified?	100900 mV	Go to *Step 7*	Go to *Step 4*
4	1. Turn the ignition OFF. 2. Disconnect the O_2 sensor connector. 3. Check the O_2 sensor pigtail lead at the sensor. Is the lead properly attached to the sensor?	-	Go to *Step 5*	Go to *Step 9*
5	1. Reconnect the O_2 sensor connector. 2. Start the engine. 3. Run the engine until it reaches operating temperature. 4. Make a vacuum leak by disconnecting or partially disconnecting a vacuum hose. Do not disconnect the manifold absolute pressure (MAP) sensor. Does the O_2 sensor input stay fixed at or below the value specified?	300 mV	Go to *Step 6*	Go to *Step 8*
6	1. Run the engine until it reaches operating temperature. 2. Make a slight vacuum leak at the MAP sensor vacuum hose connection. Does the O_2 sensor input stay fixed at or above the value specified?	600 mV	Go to *Step 7*	Go to *Step 8*
7	1. Clear the intermittent diagnostic trouble code (DTC) 13 from the ECM. 2. Road test the vehicle. 3. Perform the Diagnostic System Check. Did DTC 13 reset in the ECM?	-	Go to *Step 2*	Go to "Diagnostic Aids"
8	1. Turn the ignition OFF. 2. Disconnect the O_2 sensor connector. 3. Turn the ignition ON. 4. Measure the voltage at the O_2 sensor connector (ECM side of connector). Is the voltage within the value specified?	300-600 mV	Go to *Step 9*	Go to *Step 10*
9	1. Replace the O_2 sensor. 2. Road test the vehicle. 3. Perform the Diagnostic System Check. Is the repair complete?	-	System OK	-

DTC 13 - Oxygen Sensor Not Toggling (2.0L SOHC) (Cont'd)

Step	Action	Value(s)	Yes	No
10	Check for an open or short to ground between the O_2 sensor connector and the ECM connector terminal B11. Is the problem found?	-	Go to *Step 11*	Go to *Step 12*
11	1. Repair the wire as needed. 2. Road test the vehicle. 3. Perform the Diagnostic System Check. Is the repair complete?	-	System OK	-
12	1. Replace the ECM. 2. Road test the vehicle. 3. Perform the Diagnostic System Check. Is the repair complete?	-	System OK	-

BLANK

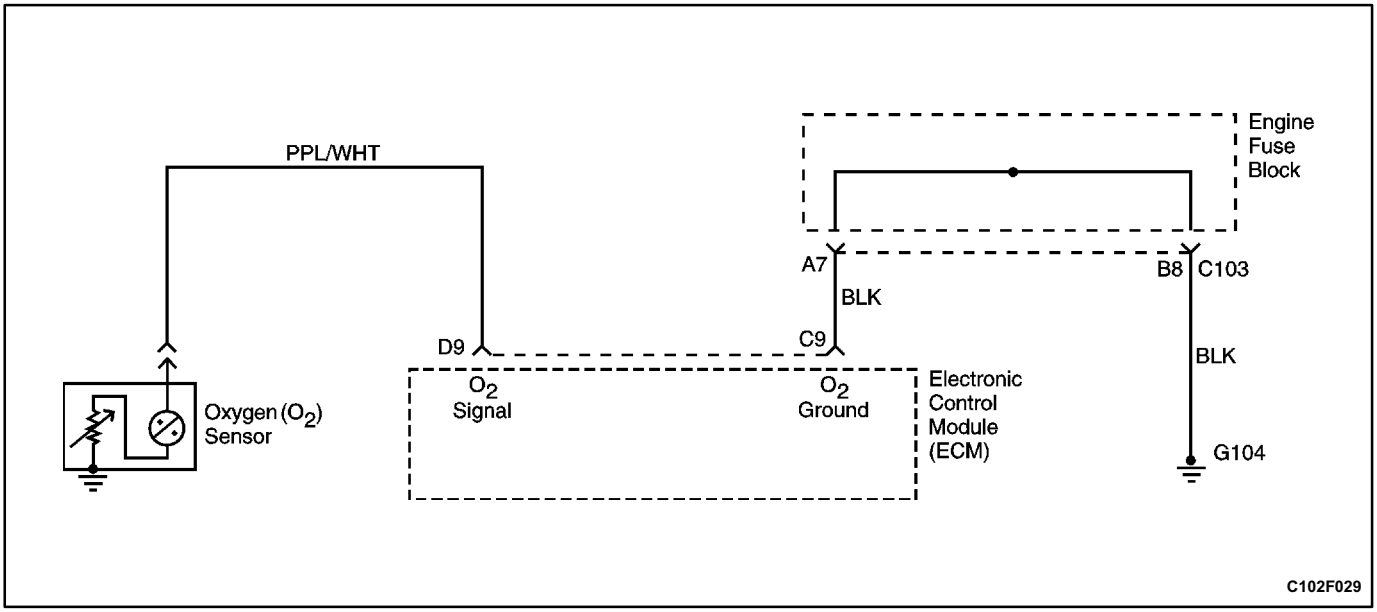

DIAGNOSTIC TROUBLE CODE (DTC) 13
OXYGEN SENSOR NOT TOGGLING (2.0L DOHC)

Circuit Description

The electronic control module (ECM) supplies a voltage of about 450 millivolts between the ECM terminals D9 and C9. The oxygen (O_2) sensor varies the voltage within a range of about 1 volt if the exhaust is rich, down to about 100 millivolts if the exhaust is lean. The O_2 sensor is like an open circuit and produces no voltage when it is below 360°C (600°F). An open O_2 sensor circuit or a cold O_2 sensor causes "open loop" operation.

DTC 13 Will Set When

- The engine has been running for at least 60 seconds.
- Diagnostic trouble code (DTC) 21 has not set.
- DTC 22 has not set.
- DTC 33 has not set.
- DTC 34 has not set.
- The throttle angle is above 5 percent.
- The coolant temperature is above 70°C (158°F).
- The oxygen (O_2) sensor is steady between 340 millivolts and 540 millivolts.
- These conditions are present for 20 seconds.

Diagnostic Aids

Normal scan tool voltage varies between 100 millivolts and 999 millivolts while in closed loop.

Test Description

The number(s) below refer to step(s) on the diagnostic table.

1. If the conditions for the diagnostic trouble code (DTC) 13 are present, the engine controls system will not operate in closed loop.
5. By making a vacuum leak, a lean running condition should now be present. If the oxygen (O_2) sensor toggles below 450 millivolts, the O_2 sensor is sensing the lean running condition.
6. By making a slight vacuum leak at the manifold absolute pressure (MAP) sensor, a rich running condition should now be present. If the O_2 sensor toggles above 550 millivolts, the O_2 sensor is sensing the rich running condition.
10. An open or short to ground in the O_2 sensor circuit will not allow the ECM to operate in closed loop.

DTC 13 - Oxygen Sensor Not Toggling (2.0L DOHC)

Step	Action	Value(s)	Yes	No
1	Was the Diagnostic System Check performed?	-	Go to *Step 2*	Go to "Diagnostic System Check"
2	1. Connect the scan tool to the assembly line diagnostic link (ALDL). 2. Start the engine. 3. Run the engine until it reaches operating temperature. 4. Check for closed loop operation. Does the electronic control module (ECM) go into closed loop?	-	Go to *Step 3*	Go to *Step 8*
3	1. Run the engine until it reaches operating temperature. 2. Check the oxygen (O_2) sensor reading at different throttle settings. Does the scan tool read the O_2 sensor input toggling between the values specified?	100-900 mV	Go to *Step 7*	Go to *Step 4*
4	1. Turn the ignition OFF. 2. Disconnect the O_2 sensor connector. 3. Check the O_2 sensor pigtail lead at the sensor. Is the lead properly attached to the sensor?	-	Go to *Step 5*	Go to *Step 9*
5	1. Reconnect the O_2 sensor connector. 2. Start the engine. 3. Run the engine until it reaches operating temperature. 4. Make a vacuum leak by disconnecting or partially disconnecting a vacuum hose. Do not disconnect the manifold absolute pressure (MAP) sensor. Does the O_2 sensor input stay fixed at or below the value specified?	300 mV	Go to *Step 6*	Go to *Step 8*
6	1. Run the engine until it reaches operating temperature. 2. Make a slight vacuum leak at the MAP sensor vacuum hose connection. Does the O_2 sensor input stay fixed at or above the value specified?	600 mV	Go to *Step 7*	Go to *Step 8*
7	1. Clear the intermittent diagnostic trouble code (DTC) 13 from the ECM. 2. Road test the vehicle. 3. Perform the Diagnostic System Check. Did DTC 13 reset in the ECM?	-	Go to *Step 2*	Go to "Diagnostic Aids"
8	1. Turn the ignition OFF. 2. Disconnect the O_2 sensor connector. 3. Turn the ignition ON. 4. Measure the voltage at the O_2 sensor connector (ECM side of connector). Is the voltage within the value specified?	300-600 mV	Go to *Step 9*	Go to *Step 10*
9	1. Replace the O_2 sensor. 2. Road test the vehicle. 3. Perform the Diagnostic System Check. Is the repair complete?	-	System OK	-

DTC 13 - Oxygen Sensor Not Toggling (2.0L DOHC) (Cont'd)

Step	Action	Value(s)	Yes	No
10	Check for an open or short to ground between the O_2 sensor connector and the ECM connector terminal D9. Is the problem found?	-	Go to *Step 11*	Go to *Step 12*
11	1. Repair the wire as needed. 2. Road test the vehicle. 3. Perform the Diagnostic System Check. Is the repair complete?	-	System OK	-
12	1. Replace the ECM. 2. Road test the vehicle. 3. Perform the Diagnostic System Check. Is the repair complete?	-	System OK	-

BLANK

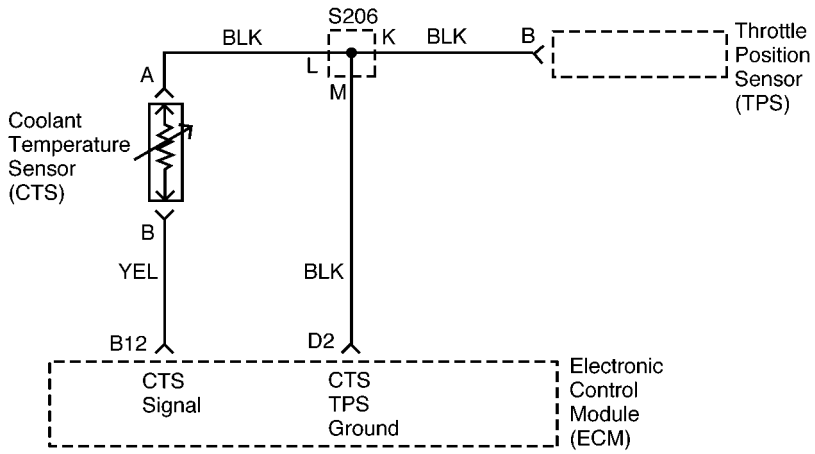

DIAGNOSTIC TROUBLE CODE (DTC) 14 COOLANT TEMPERATURE HIGH (2.0L SOHC)

Circuit Description

The coolant temperature sensor (CTS) uses a thermistor to control the signal voltage to the electronic control module (ECM). The ECM applies a voltage to the CTS. When the engine is cold, the CTS resistance is high. Therefore, the ECM will see a high signal voltage. As the engine warms, the CTS resistance becomes less, and the voltage drops. At normal engine operating temperature the CTS signal will measure about 1.5 to 2.0 volts.

DTC 14 Will Set When

- The engine has been running for more than 50 seconds.
- The coolant temperature sensor signal voltage indicates a coolant temperature above 145°C (293°F).

Diagnostic Aids

- If the connections are OK, monitor the coolant temperature while moving related connectors and the wiring harness. If the failure is induced, the display on the scan tool will change. This may help to isolate the location of an intermittent malfunction.
- The Temperature Vs. Resistance Values" scale may be used to test the coolant sensor at various temperatures to evaluate the possibility of a shifted" or misscaled" coolant temperature sensor which may result in driveability complaints.

COOLANT TEMPERATURE SENSOR		
TEMPERATURE VS. RESISTANCE VALUES (APPROXIMATE)		
°C	°F	OHMS
100	212	177
90	194	241
80	176	332
70	158	467
60	140	667
50	122	973
45	113	1188
40	104	1459
35	95	1802
30	86	2238
25	77	2796
20	68	3520
15	59	4450
10	50	5670
5	41	7280
0	32	9420
–5	23	12300
–10	14	16180
–15	5	21450
–20	–4	28680
–30	–22	52700
–40	–40	100700

Test Description

The number(s) below refer to step(s) on the diagnostic table.

4. This test simulates the conditions for setting diagnostic trouble code 14. If the electronic control module (ECM) recognizes the low signal voltage (high temperature) and the scan tool displays 180°C (356°F), the ECM wiring is OK.
6. This step checks for voltage reference from the ECM.

DTC 14 - Coolant Temperature High (2.0L SOHC)

Step	Action	Value(s)	Yes	No
1	Was the Diagnostic System Check performed?	-	Go to *Step 2*	Go to "Diagnostic System Check"
2	1. Connect the scan tool to the assembly line diagnostic link (ALDL). 2. Run the engine until it reaches operating temperature. Does the scan tool display the engine coolant temperature within the value specified?	80-110°C (176-230°F)	Go to "Diagnostic Aids"	Go to *Step 3*
3	1. Turn the ignition OFF. 2. Disconnect the coolant temperature sensor (CTS) connector. 3. Turn the ignition ON. Does the scan tool display the engine coolant temperature within the value specified?	Below −30°C (−22°F)	Go to *Step 4*	Go to *Step 6*
4	1. Jumper terminals A and B of the CTS connector. 2. Turn the ignition ON. Does the scan tool display the engine coolant temperature within the value specified?	Above 180°C (356°F)	Go to *Step 5*	Go to *Step 6*
5	1. Replace the coolant temperature sensor. 2. Run the engine until it reaches operating temperature. 3. Perform the Diagnostic System Check. Is the repair complete?	-	System OK	-
6	Measure the voltage at the CTS connector terminal B. Is the voltage within the value specified?	4.5-5.5 V	Go to *Step 7*	Go to *Step 9*
7	1. Turn the ignition OFF. 2. Disconnect the electronic control module (ECM) white connector. 3. Inspect the ECM pins and connector for bent or damaged terminals. Repair or replace as needed. 4. Check the wire between the CTS connector terminal A and the ECM connector terminal D2 for a short to ECM reference voltage. Is the problem found?	-	Go to *Step 12*	Go to *Step 8*
8	1. Replace the electronic control module. 2. Run the engine until it reaches operating temperature. 3. Perform the Diagnostic System Check. Is the repair complete?	-	System OK	-
9	Check the wire for a short to ground between the CTS connector terminal B and the ECM connector terminal B12. Is the problem found?	-	Go to *Step 13*	Go to *Step 10*

DTC 14 - Coolant Temperature High (2.0L SOHC) (Cont'd)

Step	Action	Value(s)	Yes	No
10	1. Turn the ignition OFF. 2. Disconnect the ECM red connector. 3. Inspect the ECM pins and connector for bent or damaged terminals or pins. Is the problem found?	-	Go to *Step 11*	Go to *Step 8*
11	1. Repair the connector terminals and straighten the ECM pins as needed. 2. If the ECM pins are broken, the ECM must be replaced. Have the terminals and pins been repaired?	-	Go to *Step 6*	-
12	1. Repair the short to voltage in the wire between the CTS connector terminal A and the ECM connector terminal D2. 2. Run the engine until it reaches operating temperature. 3. Perform the Diagnostic System Check. Is the repair complete?	-	System OK	-
13	1. Repair the short to ground in the wire between the CTS connector terminal B and the ECM connector terminal B12. 2. Run the engine until it reaches operating temperature. 3. Perform the Diagnostic System Check. Is the repair complete?	-	System OK	-

BLANK

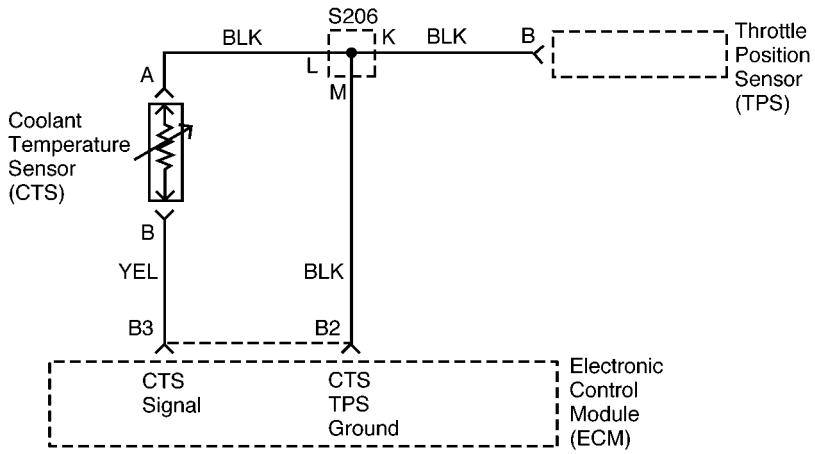

DIAGNOSTIC TROUBLE CODE (DTC) 14 COOLANT TEMPERATURE HIGH (2.0L DOHC)

Circuit Description

The coolant temperature sensor (CTS) uses a thermistor to control the signal voltage to the electronic control module (ECM). The ECM applies a voltage to the CTS. When the engine is cold, the CTS resistance is high. Therefore, the ECM will see a high signal voltage. As the engine warms, the CTS resistance becomes less, and the voltage drops. At normal engine operating temperature the CTS signal will measure about 1.5 to 2.0 volts.

DTC 14 Will Set When

- The engine has been running for more than 2 seconds.
- The coolant temperature sensor signal voltage indicates a coolant temperature above 146°C (294°F).

Diagnostic Aids

- If the connections are OK, monitor the coolant temperature while moving related connectors and the wiring harness. If the failure is induced, the display on the scan tool will change. This may help to isolate the location of an intermittent malfunction.
- The Temperature Vs. Resistance Values" scale may be used to test the coolant sensor at various temperatures to evaluate the possibility of a shifted" or misscaled" coolant temperature sensor which may result in driveability complaints.

COOLANT TEMPERATURE SENSOR		
TEMPERATURE VS. RESISTANCE VALUES (APPROXIMATE)		
°C	°F	OHMS
100	212	177
90	194	241
80	176	332
70	158	467
60	140	667
50	122	973
45	113	1188
40	104	1459
35	95	1802
30	86	2238
25	77	2796
20	68	3520
15	59	4450
10	50	5670
5	41	7280
0	32	9420
–5	23	12300
–10	14	16180
–15	5	21450
–20	–4	28680
–30	–22	52700
–40	–40	100700

Test Description

The number(s) below refer to step(s) on the diagnostic table.

4. This test simulates the conditions for setting diagnostic trouble code 14. If the electronic control module (ECM) recognizes the low signal voltage (high temperature) and the scan tool displays 180°C (356°F), the ECM wiring is OK.
6. This step checks for voltage reference from the ECM.

DTC 14 - Coolant Temperature High (2.0L DOHC)

Step	Action	Value(s)	Yes	No
1	Was the Diagnostic System Check performed?	-	Go to *Step 2*	Go to "Diagnostic System Check"
2	1. Connect the scan tool to the assembly line diagnostic link (ALDL). 2. Run the engine until it reaches operating temperature. Does the scan tool display the engine coolant temperature within the value specified?	80-110°C (176-230°F)	Go to "Diagnostic Aids"	Go to *Step 3*
3	1. Turn the ignition OFF. 2. Disconnect the coolant temperature sensor (CTS) connector. 3. Turn the ignition ON. Does the scan tool display the engine coolant temperature within the value specified?	Below −30°C (−22°F)	Go to *Step 4*	Go to *Step 6*
4	1. Jumper terminals A and B of the CTS connector. 2. Turn the ignition ON. Does the scan tool display the engine coolant temperature within the value specified?	Above 180°C (356°F)	Go to *Step 5*	Go to *Step 6*
5	1. Replace the coolant temperature sensor. 2. Run the engine until it reaches operating temperature. 3. Perform the Diagnostic System Check. Is the repair complete?	-	System OK	-
6	Measure the voltage at the CTS connector terminal B. Is the voltage within the value specified?	4.5-5.5 V	Go to *Step 7*	Go to *Step 9*
7	1. Turn the ignition OFF. 2. Disconnect the electronic control module (ECM) red connector. 3. Inspect the ECM pins and connector for bent or damaged terminals. Repair or replace as needed. 4. Check the wire between the CTS connector terminal A and the ECM connector terminal B2 for a short to ECM reference voltage. Is the problem found?	-	Go to *Step 12*	Go to *Step 8*
8	1. Replace the electronic control module. 2. Run the engine until it reaches operating temperature. 3. Perform the Diagnostic System Check. Is the repair complete?	-	System OK	-
9	Check the wire for a short to ground between the CTS connector terminal B and the ECM connector terminal B3. Is the problem found?	-	Go to *Step 13*	Go to *Step 10*

DTC 14 - Coolant Temperature High (2.0L DOHC) (Cont'd)

Step	Action	Value(s)	Yes	No
10	1. Turn the ignition OFF. 2. Disconnect the ECM red connector. 3. Inspect the ECM pins and connector for bent or damaged terminals or pins. Is the problem found?	-	Go to *Step 11*	Go to *Step 8*
11	1. Repair the connector terminals and straighten the ECM pins as needed. 2. If the ECM pins are broken, the ECM must be replaced. Have the terminals and pins been repaired?	-	Go to *Step 6*	-
12	1. Repair the short to voltage in the wire between the CTS connector terminal A and the ECM connector terminal B2. 2. Run the engine until it reaches operating temperature. 3. Perform the Diagnostic System Check. Is the repair complete?	-	System OK	-
13	1. Repair the short to ground in the wire between the CTS connector terminal B and the ECM connector terminal B3. 2. Run the engine until it reaches operating temperature. 3. Perform the Diagnostic System Check. Is the repair complete?	-	System OK	-

BLANK

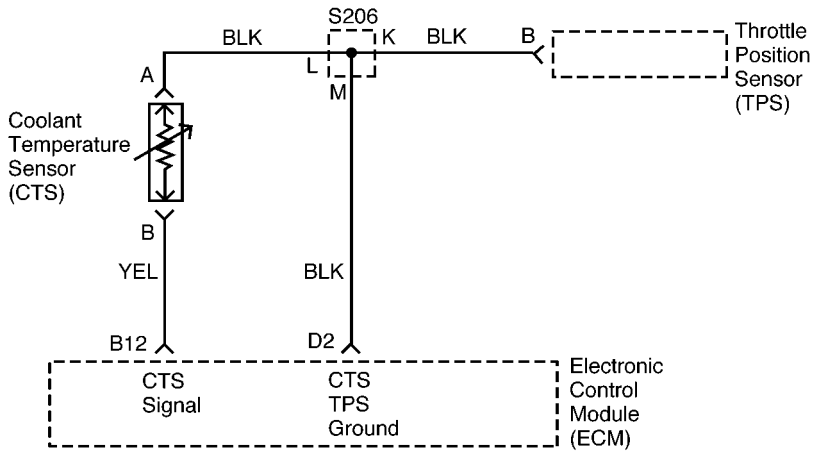

DIAGNOSTIC TROUBLE CODE (DTC) 15 COOLANT TEMPERATURE LOW (2.0L SOHC)

Circuit Description

The coolant temperature sensor (CTS) uses a thermistor to control the signal voltage to the electronic control module (ECM). The ECM applies a voltage to the CTS. When the engine is cold, the CTS resistance is high. Therefore, the ECM will see a high signal voltage. As the engine warms, the CTS resistance becomes less, and the voltage drops. At normal engine operating temperature the CTS signal will measure about 1.5 to 2.0 volts.

DTC 15 Will Set When

- The engine has been running for more than 4 seconds.
- The coolant temperature sensor signal voltage indicates a coolant temperature below −35°C (−31°F).

Diagnostic Aids

- If connections are OK, monitor the coolant temperature while moving related connectors and the wiring harness. If the failure is induced, the display on the scan tool will change. This may help to isolate the location of an intermittent malfunction.
- The Temperature Vs. Resistance Values" scale may be used to test the coolant sensor at various temperatures to evaluate the possibility of a shifted" or misscaled" coolant temperature sensor which may result in driveability complaints.

COOLANT TEMPERATURE SENSOR		
TEMPERATURE VS. RESISTANCE VALUES (APPROXIMATE)		
°C	°F	OHMS
100	212	177
90	194	241
80	176	332
70	158	467
60	140	667
50	122	973
45	113	1188
40	104	1459
35	95	1802
30	86	2238
25	77	2796
20	68	3520
15	59	4450
10	50	5670
5	41	7280
0	32	9420
−5	23	12300
−10	14	16180
−15	5	21450
−20	−4	28680
−30	−22	52700
−40	−40	100700

Test Description

The number(s) below refer to step(s) on the diagnostic table.

4. This test simulates the conditions for setting diagnostic trouble code 14. If the electronic control module (ECM) recognizes the low signal voltage (high temperature) and the scan tool displays 180°C (356°F), the ECM wiring is OK.
6. This step checks for voltage reference from the ECM.

DTC 15 - Coolant Temperature Low (2.0L SOHC)

Step	Action	Value(s)	Yes	No
1	Was the Diagnostic System Check performed?	-	Go to *Step 2*	Go to "Diagnostic System Check"
2	1. Connect the scan tool to the assembly line diagnostic link (ALDL). 2. Run the engine until it reaches operating temperature. Does the scan tool display engine coolant temperature within the value specified?	80°-110°C (176-230°F)	Go to "Diagnostic Aids"	Go to *Step 3*
3	1. Turn the ignition OFF. 2. Disconnect the coolant temperature sensor (CTS) connector. 3. Turn the ignition ON. Does the scan tool display engine coolant temperature below the value specified?	−30°C (−22°F)	Go to *Step 4*	Go to *Step 6*
4	Jumper terminals A and B of the CTS connector. Does the scan tool display engine coolant temperature above the value specified?	180°C (356°F)	Go to *Step 5*	Go to *Step 6*
5	1. Replace the coolant temperature sensor. 2. Run the engine until it reaches operating temperature. 3. Perform the Diagnostic System Check. Is the repair complete?	-	System OK	-
6	Measure the voltage at the CTS connector terminal B. Is the voltage within the value specified?	4.5-5.5 V	Go to *Step 7*	Go to *Step 9*
7	1. Turn the ignition OFF. 2. Disconnect the white connector. 3. Inspect the electronic control module (ECM) pins and connector for bent or damaged terminals. Repair or replace damaged terminals as needed. 4. Check the wire between the CTS connector terminal A and the ECM connector terminal D2 for an open or short to battery voltage. Is the problem found?	-	Go to *Step 12*	Go to *Step 8*
8	1. Replace the electronic control module. 2. Run the engine until it reaches operating temperature. 3. Perform the Diagnostic System Check. Is the repair complete?	-	System OK	-
9	Check the wire between the CTS connector terminal B and the ECM connector terminal B12 for an open or short battery voltage. Is the problem found?	-	Go to *Step 13*	Go to *Step 10*

DTC 15 - Coolant Temperature Low (2.0L SOHC) (Cont'd)

Step	Action	Value(s)	Yes	No
10	1. Turn the ignition OFF. 2. Disconnect ECM red connector. 3. Check the ECM pins and the connector for bent or damaged terminals or pins. Is the problem found?	-	Go to *Step 11*	Go to *Step 8*
11	1. Repair the ECM connector terminals and straighten the ECM pins as needed. 2. If the ECM pins are broken, the ECM must be replaced. Have the terminals and pins been repaired?	-	Go to *Step 6*	-
12	1. Repair the open or short to voltage in the wire between the CTS connector terminal A and the ECM connector terminal D2. 2. Run the engine until it reaches operating temperature. 3. Perform the Diagnostic System Check. Is the repair complete?	-	System OK	-
13	1. Repair the open or short to voltage in the wire between the CTS connector terminal B and the ECM connector terminal B12. 2. Run the engine until it reaches operating temperature. 3. Perform the Diagnostic System Check. Is the repair complete?	-	System OK	-

BLANK

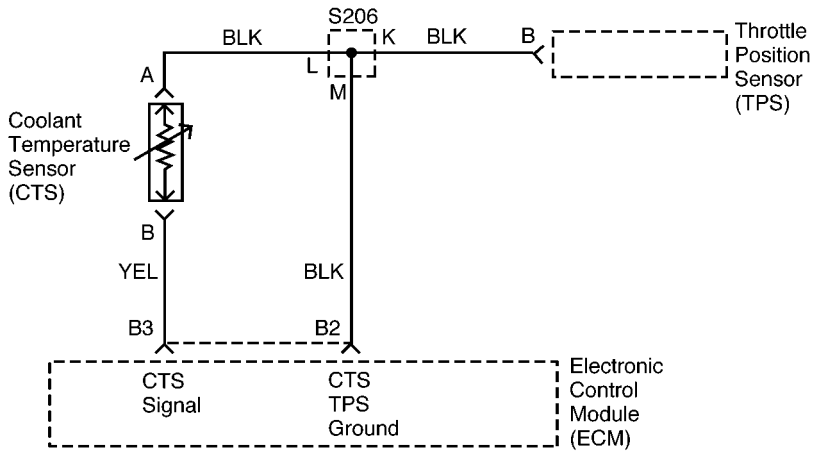

DIAGNOSTIC TROUBLE CODE (DTC) 15 COOLANT TEMPERATURE LOW (2.0L DOHC)

Circuit Description

The coolant temperature sensor (CTS) uses a thermistor to control the signal voltage to the electronic control module (ECM). The ECM applies a voltage to the CTS. When the engine is cold, the CTS resistance is high. Therefore, the ECM will see a high signal voltage. As the engine warms, the CTS resistance becomes less, and the voltage drops. At normal engine operating temperature the CTS signal will measure about 1.5 to 2.0 volts.

DTC 15 Will Set When

- The engine has been running for more than 2 seconds.
- The coolant temperature sensor signal voltage indicates a coolant temperature below −35°C (−31°F).

Diagnostic Aids

- If connections are OK, monitor the coolant temperature while moving related connectors and the wiring harness. If the failure is induced, the display on the scan tool will change. This may help to isolate the location of an intermittent malfunction.
- The Temperature Vs. Resistance Values" scale may be used to test the coolant sensor at various temperatures to evaluate the possibility of a shifted" or misscaled" coolant temperature sensor which may result in driveability complaints.

COOLANT TEMPERATURE SENSOR		
TEMPERATURE VS. RESISTANCE VALUES (APPROXIMATE)		
°C	°F	OHMS
100	212	177
90	194	241
80	176	332
70	158	467
60	140	667
50	122	973
45	113	1188
40	104	1459
35	95	1802
30	86	2238
25	77	2796
20	68	3520
15	59	4450
10	50	5670
5	41	7280
0	32	9420
−5	23	12300
−10	14	16180
−15	5	21450
−20	−4	28680
−30	−22	52700
−40	−40	100700

Test Description

The number(s) below refer to step(s) on the diagnostic table.

4. This test simulates the conditions for setting diagnostic trouble code 14. If the electronic control module (ECM) recognizes the low signal voltage (high temperature) and the scan tool displays 180°C (356°F), the ECM wiring is OK.
6. This step checks for voltage reference from the ECM.

DTC 15 - Coolant Temperature Low (2.0L DOHC)

Step	Action	Value(s)	Yes	No
1	Was the Diagnostic System Check performed?	-	Go to *Step 2*	Go to "Diagnostic System Check"
2	1. Connect the scan tool to the assembly line diagnostic link (ALDL). 2. Run the engine until it reaches operating temperature. Does the scan tool display engine coolant temperature within the value specified?	80°-110°C (176-230°F)	Go to "Diagnostic Aids"	Go to *Step 3*
3	1. Turn the ignition OFF. 2. Disconnect the coolant temperature sensor (CTS) connector. 3. Turn the ignition ON. Does the scan tool display engine coolant temperature below the value specified?	−30°C (−22°F)	Go to *Step 4*	Go to *Step 6*
4	Jumper terminals A and B of the CTS connector. Does the scan tool display engine coolant temperature above the value specified?	180°C (356°F)	Go to *Step 5*	Go to *Step 6*
5	1. Replace the coolant temperature sensor. 2. Run the engine until it reaches operating temperature. 3. Perform the Diagnostic System Check. Is the repair complete?	-	System OK	-
6	Measure the voltage at the CTS connector terminal B. Is the voltage within the value specified?	4.5-5.5 V	Go to *Step 7*	Go to *Step 9*
7	1. Turn the ignition OFF. 2. Disconnect the electronic control module (ECM) red connector. 3. Inspect the ECM pins and connector for bent or damaged terminals. Repair or replace damaged terminals as needed. 4. Check the wire between the CTS connector terminal A and the ECM connector terminal B2 for an open or short to battery voltage. Is the problem found?	-	Go to *Step 12*	Go to *Step 8*
8	1. Replace the electronic control module. 2. Run the engine until it reaches operating temperature. 3. Perform the Diagnostic System Check. Is the repair complete?	-	System OK	-
9	Check the wire between the CTS connector terminal B and the ECM connector terminal B3 for an open or short battery voltage. Is the problem found?	-	Go to *Step 13*	Go to *Step 10*

DTC 15 - Coolant Temperature Low (2.0L DOHC) (Cont'd)

Step	Action	Value(s)	Yes	No
10	1. Turn the ignition OFF. 2. Disconnect ECM red connector. 3. Check the ECM pins and the connector for bent or damaged terminals or pins. Is the problem found?	-	Go to *Step 11*	Go to *Step 8*
11	1. Repair the ECM connector terminals and straighten the ECM pins as needed. 2. If the ECM pins are broken, the ECM must be replaced. Have the terminals and pins been repaired?	-	Go to *Step 6*	-
12	1. Repair the open or short to voltage in the wire between the CTS connector terminal A and the ECM connector terminal B2. 2. Run the engine until it reaches operating temperature. 3. Perform the Diagnostic System Check. Is the repair complete?	-	System OK	-
13	1. Repair the open or short to voltage in the wire between the CTS connector terminal B and the ECM connector terminal B3. 2. Run the engine until it reaches operating temperature. 3. Perform the Diagnostic System Check. Is the repair complete?	-	System OK	-

BLANK

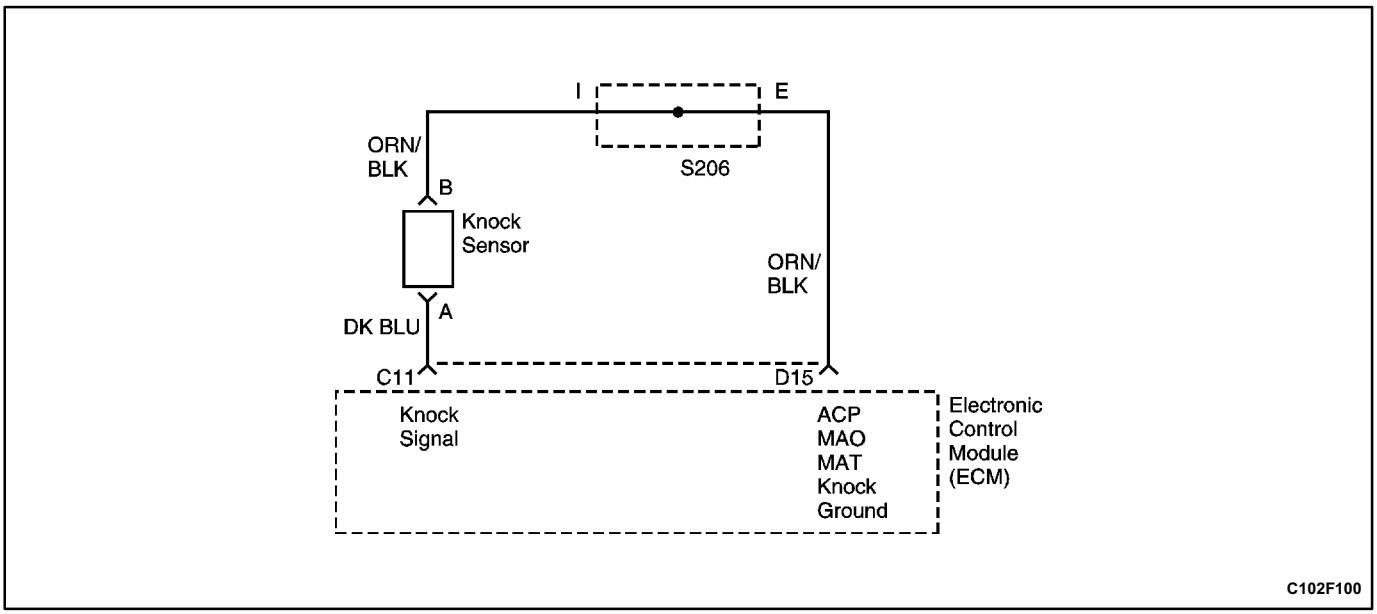

DIAGNOSTIC TROUBLE CODE (DTC) 16 KNOCK SENSOR FAILURE (2.0L DOHC)

Circuit Description

The knock sensor is used to detect engine detonation, allowing the electronic control module (ECM) to retard ignition control spark timing based on the knock sensor signal being received. The knock sensor produces an ac signal. The knock sensor signal's amplitude and frequency depend upon the amount of knock being experienced. The ECM contains a non replaceable knock filter module called a signal-to-noise enhancement filter module. This filter module in the ECM determines whether knock is occurring by comparing the signal level on the knock sensor circuit with the voltage level on the noise channel. The noise channel allows the ECM to reject any false knock signal by knowing the amount of normal engine mechanical noise present. Normal engine noise varies depending on engine speed and load. When the ECM determines that an abnormally low noise channel voltage level is being experienced, DTC 16 will set.

DTC 16 Will Set When

- The engine speed is above 2,000 rpm.
- Maximum integrated value is above 192.
- Minimum integrated value is below 20.
- The setup time is above 4 seconds.

DTC 16 - Knock Sensor Failure (2.0L DOHC)

Step	Action	Value(s)	Yes	No
1	Perform the Diagnostic System Check. Is the Diagnostic System Check complete?	-	Go to *Step 2*	-
2	Replace the electronic control module (ECM). Is the repair complete?	-	Go to "Diagnostic System Check"	-

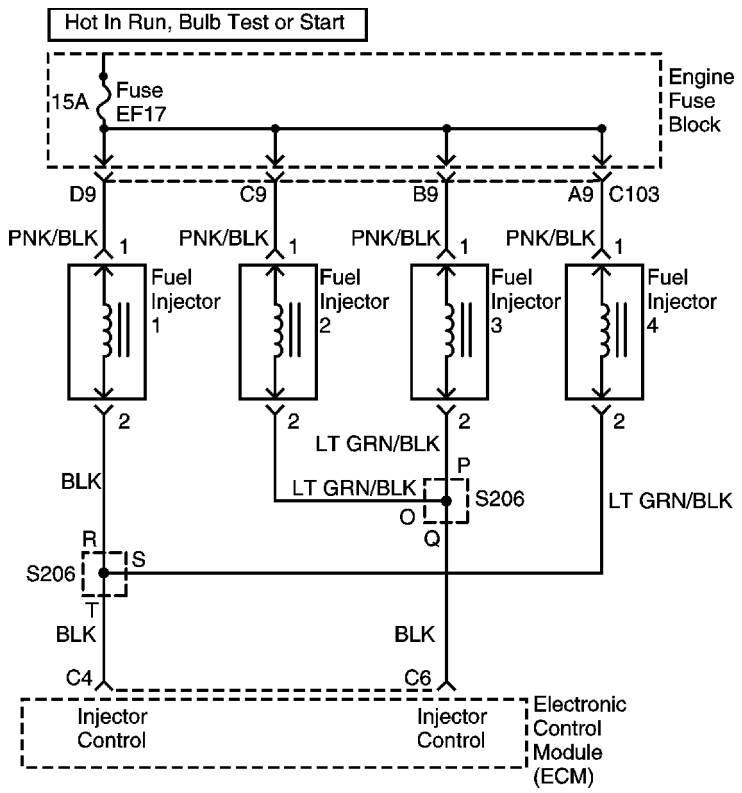

C102F033

DIAGNOSTIC TROUBLE CODE (DTC) 17
INJECTOR SHORTED TO GROUND/BATTERY (2.0L DOHC)

Circuit Description

When the ignition switch is turned to ON or START, the electronic control module (ECM) will energize and deenergize the fuel injector solenoid coil. With the solenoid coil energized, a plunger is activated, which allows pressurized fuel to be sprayed through the fuel injector into the combustion chamber where it is mixed with air from the intake manifold. This creates the proper air/fuel mixture needed for combustion.

DTC 17 Will Set When

- The fuel pump is running.
- Battery voltage is greater than 9 volts.
- A fuel injector fault has been detected over 3 times of successive 1 second intervals.

Test Description

The number(s) below refer to step(s) on the diagnostic table.

2. This step checks for the presence of battery voltage to the fuel injectors.
3. If the fuel injector test light does not flash for one of the fuel injectors, there is an open fuel injector control wire to the electronic control module (ECM) or the ECM is faulty.
13. An open coil in a fuel injector will prevent the fuel injector from operating.

DTC 17 - Injector Shorted to Ground/Battery (2.0L DOHC)

Step	Action	Value(s)	Yes	No
1	Was the Diagnostic System Check performed?	-	Go to *Step 2*	Go to "Diagnostic System Check"
2	1. Disconnect the fuel injector harness from all of the fuel injectors. 2. Turn the ignition ON. 3. Measure the voltage at all of the fuel injector harness terminals. Is battery voltage present on the 1 terminal only of each connector?	-	Go to *Step 3*	Go to *Step 8*
3	Connect a fuel injector test light to each of the fuel injector harness connector while cranking the engine. Does the test light blink on all connectors?	-	Go to *Step 13*	Go to *Step 4*
4	Does the fuel injector test light stay off for one or more of the fuel injector(s)?	-	Go to *Step 6*	Go to *Step 5*
5	Does the fuel injector test light stay on for one or more fuel injector(s)?	-	Go to *Step 11*	-
6	1. Check for a short to battery positive between the fuel injector harness connector terminal 2 and the electronic control module (ECM) connector terminal C4 for fuel injectors 1 and 4. 2. Check for a short to battery positive between the fuel injector harness connector terminal 2 and the ECM connector terminal C6 for fuel injectors 2 and 3. Is the problem found?	-	Go to *Step 7*	Go to *Step 15*
7	1. Repair the short to battery positive as needed. 2. Connect an injector test light to each injector harness connector while cranking the engine. Does the test light blink on all connectors?	-	Go to "Diagnostic System Check"	-
8	Is battery voltage not present at the 1 terminal of any injector harness connector?	-	Go to *Step 10*	Go to *Step 9*
9	Is battery voltage present at the 2 terminal of any injector harness connector?	-	Go to *Step 6*	-
10	1. Check for a short to ground in the fuel injector harness. 2. Check the fuel injector harness connectors for damaged terminals. 3. Perform repairs as needed. 4. Check for battery voltage at the 1 terminals of all of the fuel injector harness connectors. Is battery voltage present on the 1 terminal only of each connector?	-	Go to *Step 3*	-
11	1. Check for a short to ground between the fuel injector harness connector terminal 2 to ECM connector terminal C4 for injectors 1 and 4. 2. Check for a short to ground between the fuel injector harness connector terminal 2 to ECM connector terminal C6 for injectors 2 and 3. Is the problem found?	-	Go to *Step 12*	Go to *Step 15*

DTC 17 - Injector Shorted to Ground/Battery (2.0L DOHC) (Cont'd)

Step	Action	Value(s)	Yes	No
12	1. Repair the short to ground as needed. 2. Connect a fuel injector test light to each of the fuel injector harness connectors while cranking the engine. Does the test light blink on all connectors?	-	Go to *Step 13*	Go to *Step 4*
13	Measure the resistance of each fuel injector. Is the fuel injector resistance within the value specified (the resistance will increase slightly at higher temperatures)?	11.6-12.4 Ω	System OK	Go to *Step 14*
14	1. Replace any of the fuel injectors with a resistance that is out of specification. 2. Clear any diagnostic trouble code(s) (DTCs) from the ECM. 3. Perform the Diagnostic System Check. Is the repair complete?	-	System OK	-
15	1. Replace the ECM. 2. Perform the Diagnostic System Check. Is the repair complete?	-	System OK	-

BLANK

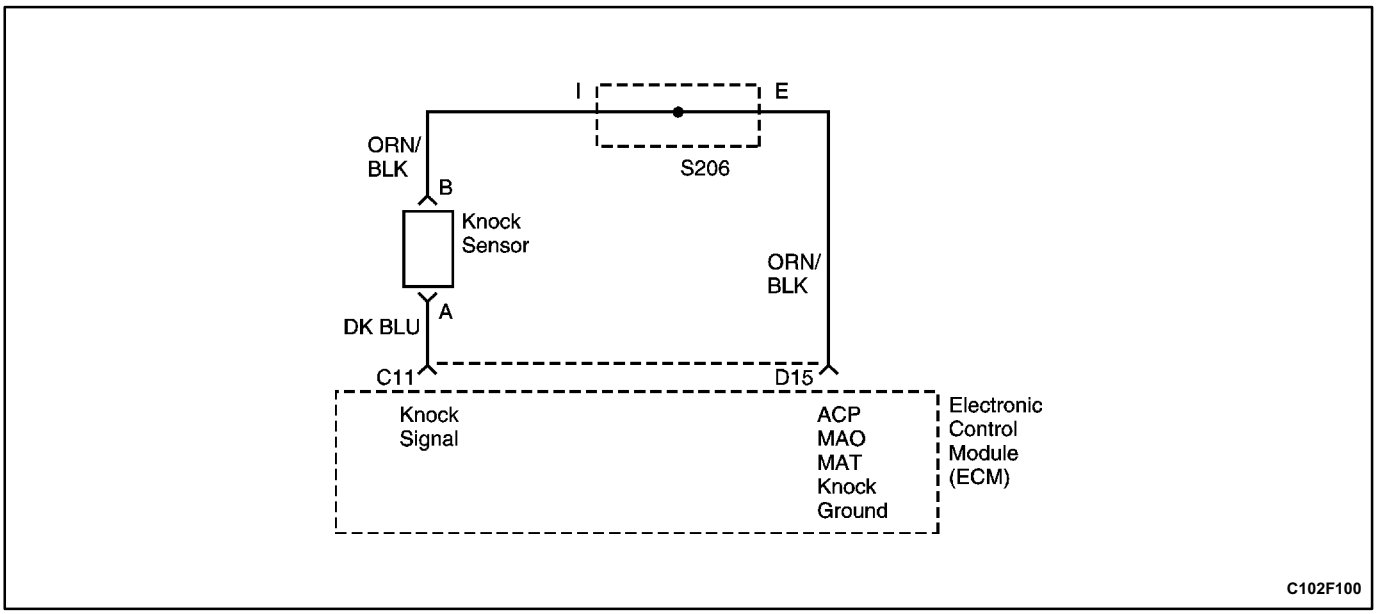

DIAGNOSTIC TROUBLE CODE (DTC) 18
KNOCK SENSOR ACTIVITY FAILURE (2.0L DOHC)

Circuit Description

The electronic control module (ECM) uses the knock sensor to detect engine detonation, allowing the ECM to retard ignition control spark timing based on the knock sensor signal being received. The knock sensor produces an ac signal. The signal amplitude and frequency are dependent upon the amount of knock being experienced.

DTC 18 Will Set When

- The engine speed is above 2,000 rpm.
- Maximum integrated value is above 110 for at least 2 seconds.
- Minimum integrated value is below 1 for at least 2 seconds.
- Diagnostic trouble code (DTC) 16 is not set.
- Noise value is above 40 counts for at least 4 seconds.
- Noise value is below 0 counts for at least 4 seconds.

Diagnostic Aids

- Repair any engine mechanical problem before proceeding with diagnostics.
- Make sure the correct fuel octane rating is used.

Test Description

The number(s) below refer to step(s) on the diagnostic table.

2. Checks the signal circuit and not sensor voltage.
6. Check the ground side of the circuit for an open, a short to ground, or a short to battery.

DTC 18 - DSNEF Activity Failure (2.0L DOHC)

Step	Action	Value(s)	Yes	No
1	Perform the Diagnostic System Check. Is the Diagnostic System Check complete?	-	Go to *Step 2*	-
2	1. Turn the ignition OFF. 2. Disconnect the electrical connector at the electronic control module (ECM). 3. Connect a digital voltmeter (DVM) to monitor ac voltage between between terminal C11 of the ECM connector and ground. 4. Tap on the engine with a extension near the knock sensor while observing the signal on the DVM. Is any signal indicated on the DVM while tapping on the engine?	-	Go to *Step 3*	Go to *Step 4*
3	1. Connect the electrical connector at the ECM. 2. Disconnect the electrical connector at the knock sensor. 3. Using a test light to battery positive probe terminal B on the ECM side of the knock sensor. Did the test light illuminate?	-	Go to Step 6	Go to Step 8
4	Check the wire from terminal C11 on the ECM to terminal A on the ECM side of the knock sensor for an open, a short to ground, or a short to battery. Does the wire indicate an open, a short to ground, or a short to battery?	-	Go to *Step 5*	Go to *Step 7*
5	Repair the wire from terminal C11 of the ECM to terminal A on the ECM side of the knock sensor. Is the repair complete?	-	Go to "Diagnostic System Check"	-
6	Replace the ECM. Is the repair complete?	-	Go to "Diagnostic System Check"	-
7	Replace the knock sensor. Is the repair complete?	-	Go to "Diagnostic System Check"	-
8	Repair the wire from terminal B of the knock sensor to terminal D15 of the ECM. Is the repair complete?	-	Go to "Diagnostic System Check"	-

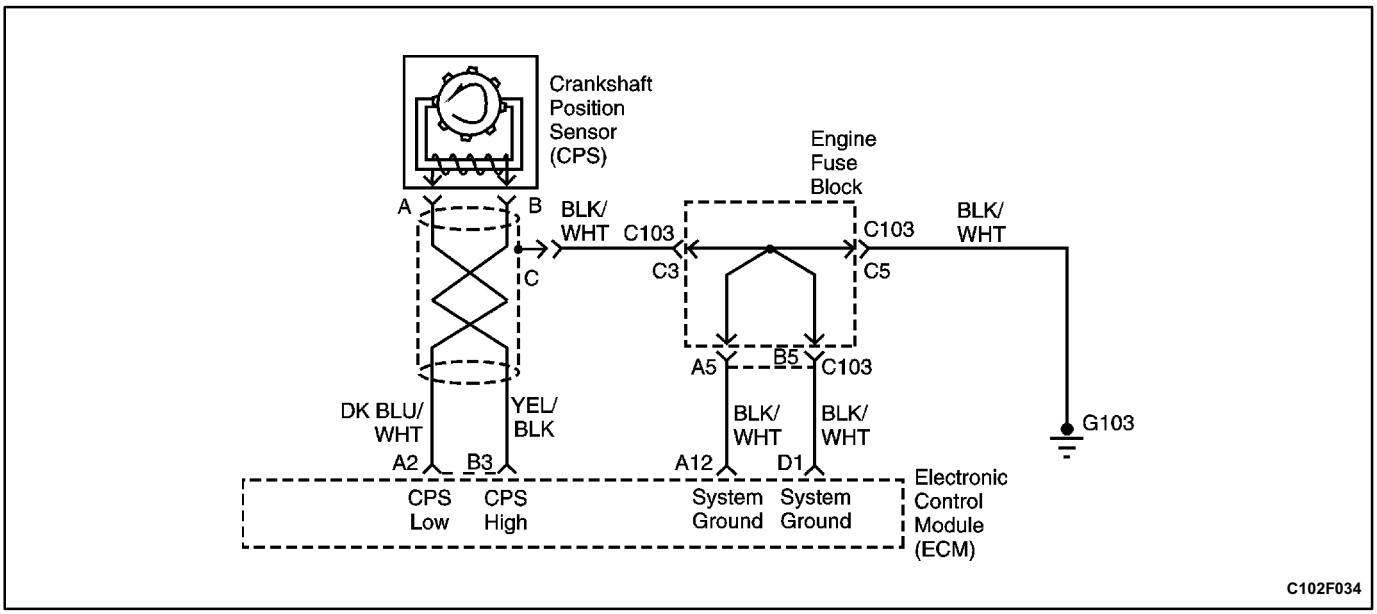

DIAGNOSTIC TROUBLE CODE (DTC) 19
58X SIGNAL ERROR (A AND B) (2.0L SOHC)

Circuit Description

The crankshaft position sensor is a Hallēffect sensor which senses a slotted wheel that is attached to the crankshaft pulley. The slotted wheel interrupts a magnetic field and produces a reference signal from the sensor.

DTC Will Set When

- ✳ The revolutions of the 58X signal are fewer than 65.
- ✳ There are consecutive missing pulses of 10 or more.
- ✳ Starting manifold absolute pressure is less than 0.6 kPa (0.178 inches Hg) for at least 3 seconds.
- ✳ Starting battery voltage drop is less than 0.5 volt for at least 3 seconds.

Diagnostic Aids

Check for poor connections at the electronic control module (ECM) and at the crankshaft position sensor (CPS).

Test Description

The number(s) below refer to step(s) on the diagnostic table.

3. It is important to inspect all of the connector terminals to prevent inaccurate diagnosis.
6. The specified value during cranking is an average voltage produced as the sensor voltage oscillates.

DTC 19 - 58X Signal Error (A and B) (2.0L SOHC)

Step	Action	Value(s)	Yes	No
1	Was the Diagnostic System Check performed?	-	Go to *Step 2*	Go to "Diagnostic System Check"
2	Start the engine and allow it to idle. Does the engine start?	-	Go to *Step 3*	Go to "Engine Cranks But Will Not Start"
3	1. Turn the ignition OFF. 2. Disconnect the crankshaft position sensor (CPS) connector. 3. Inspect the CPS terminals. Are any terminals damaged?	-	Go to *Step 13*	Go to *Step 4*
4	Inspect CPS connector terminals. Are any connector terminals damaged?	-	Go to *Step 5*	Go to *Step 6*

DTC 19 - 58X Signal Error (A and B) (2.0L SOHC) (Cont'd)

Step	Action	Value(s)	Yes	No
5	1. Repair or replace any damaged terminals. 2. Clear any diagnostic trouble code(s) (DTCs) from the electronic control module (ECM). 3. Road test the vehicle. 4. Perform the Diagnostic System Check. Is the repair complete?	-	System OK	-
6	1. Connect the CPS connector. 2. Disconnect the direct ignition system (DIS) ignition coil connector to prevent the vehicle from starting. 3. Connect a voltmeter between ground and the ECM connector terminal A2 by backprobing the ECM connector. Are the voltage readings near the values specified?	1.08 V with the ignition ON, 1.20 V during cranking	Go to *Step 7*	Go to *Step 9*
7	Connect a voltmeter between ground and the ECM connector terminal B3 by backprobing the ECM connector. Are the voltage readings near the values specified?	1.08 V with the ignition ON, 1.20 v during cranking	Go to *Step 8*	Go to *Step 10*
8	1. Connect the DIS ignition coil connector 2. Replace the electronic control module. 3. Road test the vehicle. 4. Perform the Diagnostic System Check. Is the repair complete?	-	System OK	-
9	Check for an open or short in the wire between the CPS connector terminal A and the ECM connector terminal A2. Is the problem found?	-	Go to *Step 12*	Go to *Step 11*
10	Check for an open or short in the wire between the CPS connector terminal B and the ECM connector terminal B3. Is the problem found?	-	Go to *Step 12*	Go to *Step 11*
11	Check for an open or short in the wire between the CPS connector terminal C and ground. Is the problem found?	-	Go to *Step 12*	Go to *Step 13*
12	1. Connect the DIS ignition coil connector. 2. Repair the wiring needed. 3. Clear any DTCs from the ECM. 4. Road test the vehicle. 5. Perform the Diagnostic System Check. Is the repair complete?	-	System OK	-
13	1. Connect the DIS ignition coil connector. 2. Replace the crankshaft position sensor. 3. Clear any DTCs from the ECM. 4. Road test the vehicle. 5. Perform the Diagnostic System Check. Is the repair complete?	-	System OK	-

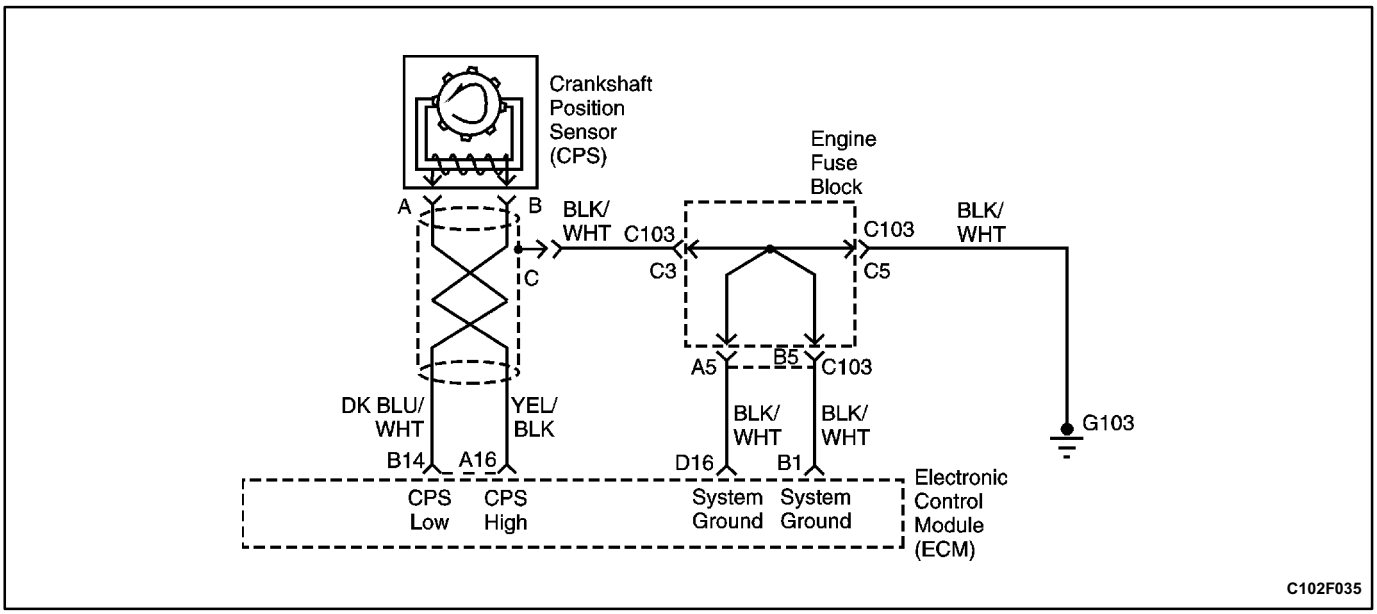

DIAGNOSTIC TROUBLE CODE (DTC) 19
58X SIGNAL ERROR (A AND B) (2.0L DOHC)

Circuit Description

The crankshaft position sensor is a Hallēffect sensor which senses a slotted wheel that is attached to the crankshaft. The slotted wheel interrupts a magnetic field and produces a reference signal from the sensor.

DTC Will Set When

- ✳ Starting manifold absolute pressure (MAP) drop is less than 0.6 kPa (0.178 inches Hg) for at least 3 seconds.
- ✳ Starting battery voltage drop is less than 0.8 volt for at least 3 seconds.
- ✳ There are consecutive missing pulses of 10 or more.
- ✳ The revolutions of the 58X signal are fewer than 65.

Diagnostic Aids

Check for poor connections at the electronic control module (ECM) and at the crankshaft position sensor (CPS).

Test Description

The number(s) below refer to step(s) on the diagnostic table.

3. It is important to inspect all of the connector terminals to prevent inaccurate diagnosis.
6. The specified value during cranking is an average voltage produced as the sensor voltage oscillates.

DTC 19 - 58X Signal Error (A and B) (2.0L DOHC)

Step	Action	Value(s)	Yes	No
1	Was the Diagnostic System Check performed?	-	Go to *Step 2*	Go to "Diagnostic System Check"
2	Start the engine and allow it to idle. Does the engine start?	-	Go to *Step 3*	Go to "Engine Cranks But Will Not Start"
3	1. Turn the ignition OFF. 2. Disconnect the crankshaft position sensor (CPS) connector. 3. Inspect the CPS terminals. Are any terminals damaged?	-	Go to *Step 13*	Go to *Step 4*

DTC 19 - 58X Signal Error (A and B) (2.0L DOHC) (Cont'd)

Step	Action	Value(s)	Yes	No
4	Inspect CPS connector terminals. Are any connector terminals damaged?	-	Go to *Step 5*	Go to *Step 6*
5	1. Repair or replace any damaged terminals. 2. Clear any diagnostic trouble code(s) (DTCs) from the electronic control module (ECM). 3. Road test the vehicle. 4. Perform the Diagnostic System Check. Is the repair complete?	-	System OK	-
6	1. Connect the CPS connector. 2. Disconnect the direct ignition system (DIS) ignition coil connector to prevent the vehicle from starting. 3. Connect a voltmeter between ground and the ECM connector terminal B14 by backprobing the ECM connector. Are the voltage readings near the values specified?	1.08 V with the ignition ON, 1.20 V during cranking	Go to *Step 7*	Go to *Step 9*
7	Connect a voltmeter between ground and the ECM connector terminal A16 by backprobing the ECM connector. Are the voltage readings near the values specified?	1.08 V with the ignition ON, 1.20 V during cranking	Go to *Step 8*	Go to *Step 10*
8	1. Connect the DIS ignition coil connector 2. Replace the electronic control module. 3. Road test the vehicle. 4. Perform the Diagnostic System Check. Is the repair complete?	-	System OK	-
9	Check for an open or short in the wire between the CPS connector terminal A and the ECM connector terminal B14. Is the problem found?	-	Go to *Step 12*	Go to *Step 11*
10	Check for an open or short in the wire between the CPS connector terminal B and the ECM connector terminal A16. Is the problem found?	-	Go to *Step 12*	Go to *Step 11*
11	Check for an open or short in the wire between the CPS connector terminal C and ground. Is the problem found?	-	Go to *Step 12*	Go to *Step 13*
12	1. Connect the DIS ignition coil connector. 2. Repair the wiring needed. 3. Clear any DTCs from the ECM. 4. Road test the vehicle. 5. Perform the Diagnostic System Check. Is the repair complete?	-	System OK	-
13	1. Connect the DIS ignition coil connector. 2. Replace the crankshaft position sensor. 3. Clear any DTCs from the ECM. 4. Road test the vehicle. 5. Perform the Diagnostic System Check. Is the repair complete?	-	System OK	-

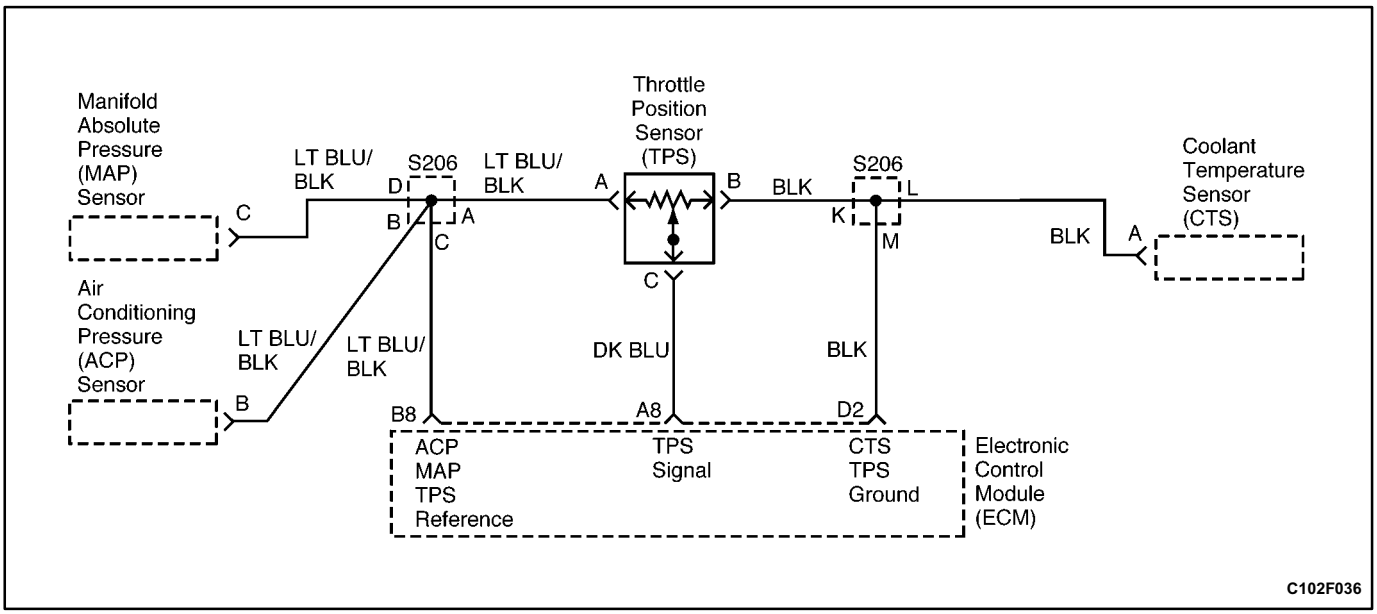

DIAGNOSTIC TROUBLE CODE (DTC) 21 THROTTLE POSITION SENSOR HIGH (2.0L SOHC)

Circuit Description

The throttle position sensor (TPS) provides a voltage signal that changes in relation to the throttle plate angle. The signal voltage will vary from about 0.4 to 0.8 volt at idle to nearly 5.0 volts at wide open throttle. The TPS is one of the most important inputs used by the electronic control module (ECM) for fuel control and other functions such as idle, wide open throttle, deceleration enleanment, and acceleration enrichment.

DTC 21 Will Set When

- The engine speed is less than 1,750 rpm.
- The manifold absolute pressure (MAP) reading is below 65kPa (19 inches Hg).
- The throttle position sensor reading is greater than 200 counts.
- Diagnostic trouble code (DTC) 34 has not set.
- All of the above conditions are present for 2 seconds.

Diagnostic Aids

- Inspect the electronic control module connector (ECM) terminals and the throttle position sensor (TPS) connector terminals for improper mating and poor terminal to wire connections.
- Observe the TPS voltage on a scan tool with the ignition ON and the engine stopped. Press the accelerator pedal while watching for smooth changes in the voltage readings of the TPS.

Test Description

The number(s) below refer to step(s) on the diagnostic table.

3. This step checks the voltage reference from the ECM and also the ground wire to the ECM.
4. This step checks the TPS signal wire. If the scan tool shows the TPS voltage above 4 volts, the signal wire is OK.
10. After checking the TPS wiring and confirming the ECM's ability to read a TPS signal, it can be determined that the TPS is at fault.

DTC 21 - Throttle Position Sensor High (2.0L SOHC)

Step	Action	Value(s)	Yes	No
1	Was the Diagnostic System Check performed?	-	Go to *Step 2*	Go to "Diagnostic System Check"
2	1. Connect a scan tool to the assembly line diagnostic link (ALDL). 2. Turn the ignition ON. 3. Operate the throttle lever from closed to open while watching the throttle position sensor (TPS) voltage on the scan tool. Does the scan tool show the TPS voltage change smoothly within the value specified?	0.10-0.90 V to 3.9-4.9 V	Go to "Diagnostic Aids"	Go to *Step 3*
3	1. Turn the ignition OFF. 2. Disconnect the TPS connector. 3. Turn the ignition ON. 4. Measure the voltage between the TPS connector terminals A and B. Does the voltage measure within the value specified?	4.5-5.5 V	Go to *Step 4*	Go to *Step 5*
4	Jumper the TPS connector terminals A and C. Does the scan tool show the TPS voltage above the value specified?	4.0 V	Go to *Step 10*	Go to *Step 8*
5	Measure the voltage between the TPS connector terminal A and ground. Does the voltage measure within the value specified?	4.5-5.5 V	Go to *Step 6*	Go to *Step 7*
6	Check for a short to battery voltage in the wire between the TPS connector terminal B and the electronic control module (ECM) connector terminal D2. Is the problem found?	-	Go to *Step 9*	Go to *Step 11*
7	Check for a short to battery voltage in the wire between the TPS connector terminal A and the ECM connector terminal B8. Is the problem found?	-	Go to *Step 9*	Go to *Step 11*
8	Check for a short to voltage in the wire between the TPS connector terminal C and the ECM connector terminal A8. Is the problem found?	-	Go to *Step 9*	Go to *Step 11*
9	1. Turn the ignition OFF. 2. Repair the wire or the connector terminal as needed. 3. Clear any DTCs from the ECM. 4. Perform the Diagnostic System Check. Is the repair complete?	-	System OK	-
10	1. Turn the ignition OFF. 2. Replace the throttle position sensor. 3. Clear any DTCs from the ECM. 4. Perform the Diagnostic System Check. Is the repair complete?	-	System OK	-
11	1. Turn the ignition OFF. 2. Replace the ECM. 3. Perform the Diagnostic System Check. Is the repair complete?	-	System OK	-

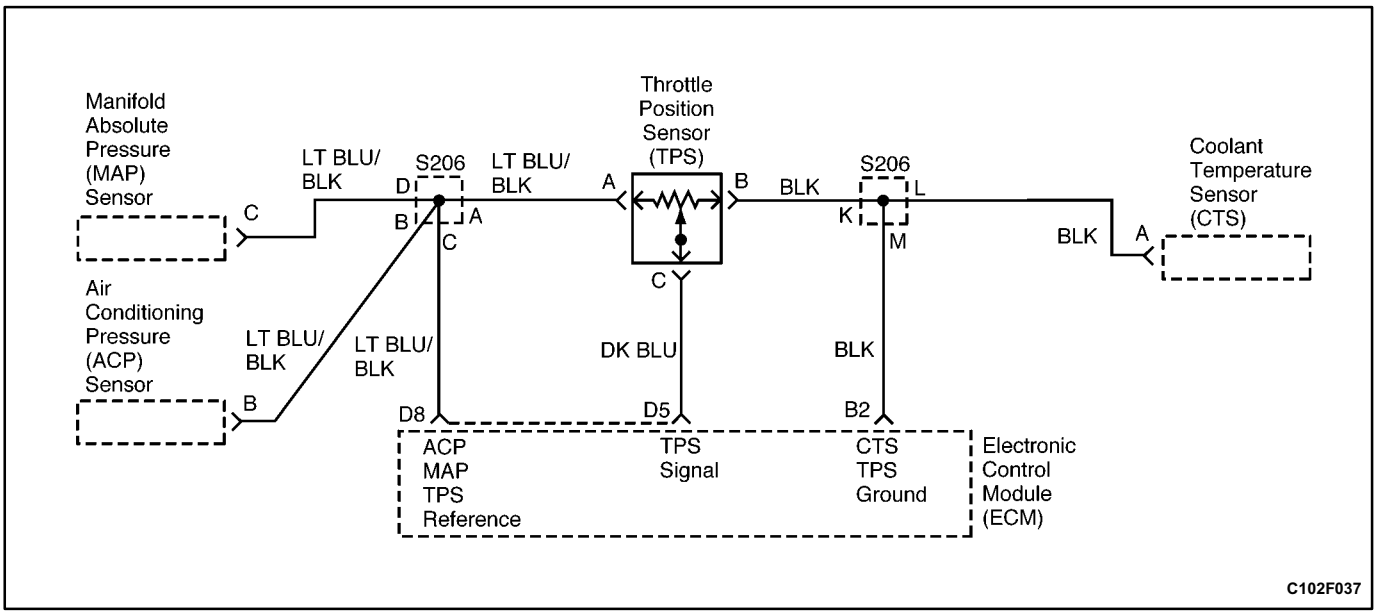

DIAGNOSTIC TROUBLE CODE (DTC) 21 THROTTLE POSITION SENSOR HIGH (2.0L DOHC)

Circuit Description

The throttle position sensor (TPS) provides a voltage signal that changes in relation to the throttle plate angle. The signal voltage will vary from about 0.4 to 0.8 volt at idle to nearly 5.0 volts at wide open throttle. The TPS is one of the most important inputs used by the electronic control module (ECM) for fuel control and other functions such as idle, wide open throttle, deceleration enleanment, and acceleration enrichment.

DTC 21 Will Set When

- ✳ The engine speed is less than 3,000 rpm.
- ✳ The manifold absolute pressure reading (MAP) is below 85kPa (25 inches Hg).
- ✳ The throttle position sensor reading is greater than 240 counts.
- ✳ Diagnostic trouble code (DTC) 33 and 34 are not set.
- ✳ These conditions are present for 2 seconds.

Diagnostic Aids

- ✳ Inspect the electronic control module connector (ECM) terminals and the throttle position sensor (TPS) connector terminals for improper mating and poor terminal to wire connections.
- ✳ Observe the TPS voltage on a scan tool with the ignition ON and the engine stopped. Press the accelerator pedal while watching for smooth changes in the voltage readings of the TPS.

Test Description

The number(s) below refer to step(s) on the diagnostic table.

3. This step checks the voltage reference from the ECM and also the ground wire to the ECM.
4. This step checks the TPS signal wire. If the scan tool shows the TPS voltage above 4 volts, the signal wire is OK.
10. After checking the TPS wiring and confirming the ECM's ability to read a TPS signal, it can be determined that the TPS is at fault.

DTC 21 - Throttle Position Sensor High (2.0L DOHC)

Step	Action	Value(s)	Yes	No
1	Was the Diagnostic System Check performed?	-	Go to *Step 2*	Go to "Diagnostic System Check"
2	1. Connect a scan tool to the assembly line diagnostic link (ALDL). 2. Turn the ignition ON. 3. Operate the throttle lever from closed to open while watching the throttle position sensor (TPS) voltage on the scan tool. Does the scan tool show the TPS voltage change smoothly within the value specified?	0.10-0.90 V to 3.9-4.9 V	Go to "Diagnostic Aids"	Go to *Step 3*
3	1. Turn the ignition OFF. 2. Disconnect the TPS connector. 3. Turn the ignition ON. 4. Measure the voltage between the TPS connector terminals A and B. Does the voltage measure within the value specified?	4.5-5.5 V	Go to *Step 4*	Go to *Step 5*
4	Jumper the TPS connector terminals A and C. Does the scan tool show the TPS voltage above the value specified?	4.0 V	Go to *Step 10*	Go to *Step 8*
5	Measure the voltage between the TPS connector terminal A and ground. Does the voltage measure within the value specified?	4.5-5.5 V	Go to *Step 6*	Go to *Step 7*
6	Check for a short to battery voltage in the wire between the TPS connector terminal B and the electronic control module (ECM) connector terminal B2. Is the problem found?	-	Go to *Step 9*	Go to *Step 11*
7	Check for a short to battery voltage in the wire between the TPS connector terminal A and the ECM connector terminal D8. Is the problem found?	-	Go to *Step 9*	Go to *Step 11*
8	Check for a short to voltage in the wire between the TPS connector terminal C and the ECM connector terminal D5. Is the problem found?	-	Go to *Step 9*	Go to *Step 11*
9	1. Turn the ignition OFF. 2. Repair the wire or the connector terminal as needed. 3. Clear any diagnostic trouble code(s) (DTCs) from the ECM. 4. Perform the Diagnostic System Check. Is the repair complete?	-	System OK	-
10	1. Turn the ignition OFF. 2. Replace the throttle position sensor. 3. Clear any DTCs from the ECM. 4. Perform the Diagnostic System Check. Is the repair complete?	-	System OK	-
11	1. Turn the ignition OFF. 2. Replace the ECM. 3. Perform the Diagnostic System Check. Is the repair complete?	-	System OK	-

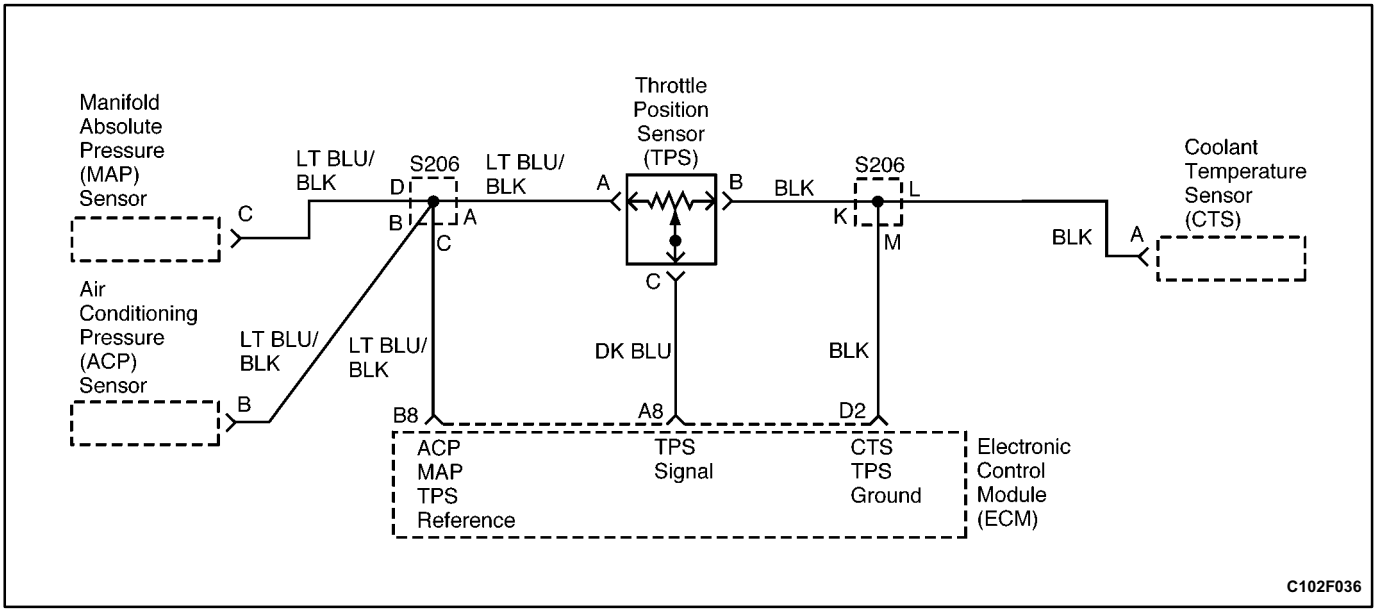

DIAGNOSTIC TROUBLE CODE (DTC) 22 THROTTLE POSITION SENSOR LOW (2.0L SOHC)

Circuit Description

The throttle position sensor (TPS) provides a voltage signal that changes in relation to the throttle plate angle. The signal voltage will vary from about 0.4 to 0.8 volt at idle to nearly 5.0 volts at wide open throttle. The TPS is one of the most important inputs used by the electronic control module (ECM) for fuel control and other functions such as idle, wide open throttle, deceleration enleanment, and acceleration enrichment.

DTC 22 Will Set When

- ✳ The throttle position sensor reading is less than 10 counts.
- ✳ These conditions are present for 5 seconds.

Diagnostic Aids

- ✳ Inspect the electronic control module connector (ECM) terminals and the throttle position sensor (TPS) connector terminals for improper mating and poor terminal to wire connections.
- ✳ Observe the TPS voltage on a scanner with the ignition ON and the engine stopped. Press the accelerator pedal while watching for smooth changes in the voltage readings of the TPS.

Test Description

The number(s) below refer to step(s) on the diagnostic table.

1. When measuring the voltage between the throttle position sensor (TPS) terminals A and B, 4.5 to 5.5 volts confirms the 5 volt reference and ground from the electronic control module (ECM) are OK.
11. If there is a problem with the voltage reference or the ground from the ECM, confirm that the wiring is OK. If there is no problem present in the wiring, the ECM is at fault.

DTC 22 - Throttle Position Sensor Low (2.0L SOHC)

Step	Action	Value(s)	Yes	No
1	Was the Diagnostic System Check performed?	-	Go to *Step 2*	Go to "Diagnostic System Check"
2	1. Connect the scan tool to the assembly line diagnostic link (ALDL). 2. Turn the ignition ON. 3. Operate the throttle lever from closed to open while watching the throttle position sensor (TPS) voltage on the scan tool. Does the scan tool show the TPS voltage change smoothly within the values specified?	0.10-0.90 V to 3.9-4.9 V	Go to "Diagnostic Aids"	Go to *Step 3*
3	1. Turn the ignition OFF. 2. Disconnect the TPS connector. 3. Turn the ignition ON. 4. Measure the voltage between the TPS connector terminals A and B. Is the voltage within the value specified?	4.5-5.5 V	Go to *Step 4*	Go to *Step 5*
4	Connect a fused jumper between the TPS connector terminals A and C. Does the scan tool show the TPS voltage above the value specified?	4 v	Go to *Step 10*	Go to *Step 8*
5	Measure the voltage between the TPS connector terminal A and the ground. Is the voltage within the value specified?	4.5-5.5 V	Go to *Step 6*	Go to *Step 7*
6	1. Turn the ignition OFF. 2. Check for an open in the wire between the TPS connector terminal B and the electronic control module (ECM) connector terminal D2. Is the problem found?	-	Go to *Step 9*	Go to *Step 11*
7	1. Turn the ignition OFF. 2. Check for an open or short to ground in the wire between the TPS connector terminal A and the ECM connector terminal B8. Is the problem found?	-	Go to *Step 9*	Go to *Step 11*
8	1. Turn the ignition OFF. 2. Check for an open or short to ground between the TPS connector terminal C and the ECM connector terminal A8. Is the problem found?	-	Go to *Step 9*	Go to *Step 11*
9	1. Repair the wire or the connector terminal as needed. 2. Clear any diagnostic trouble code(s) (DTCs) from the ECM. 3. Perform the Diagnostic System Check. Is the repair complete?	-	System OK	-
10	1. Replace the throttle position sensor. 2. Clear any DTCs from the ECM. 3. Perform the Diagnostic System Check. Is the repair complete?	-	System OK	-
11	1. Ignition OFF. 2. Replace the electronic control module. 3. Perform the Diagnostic System Check. Is the repair complete?	-	System OK	-

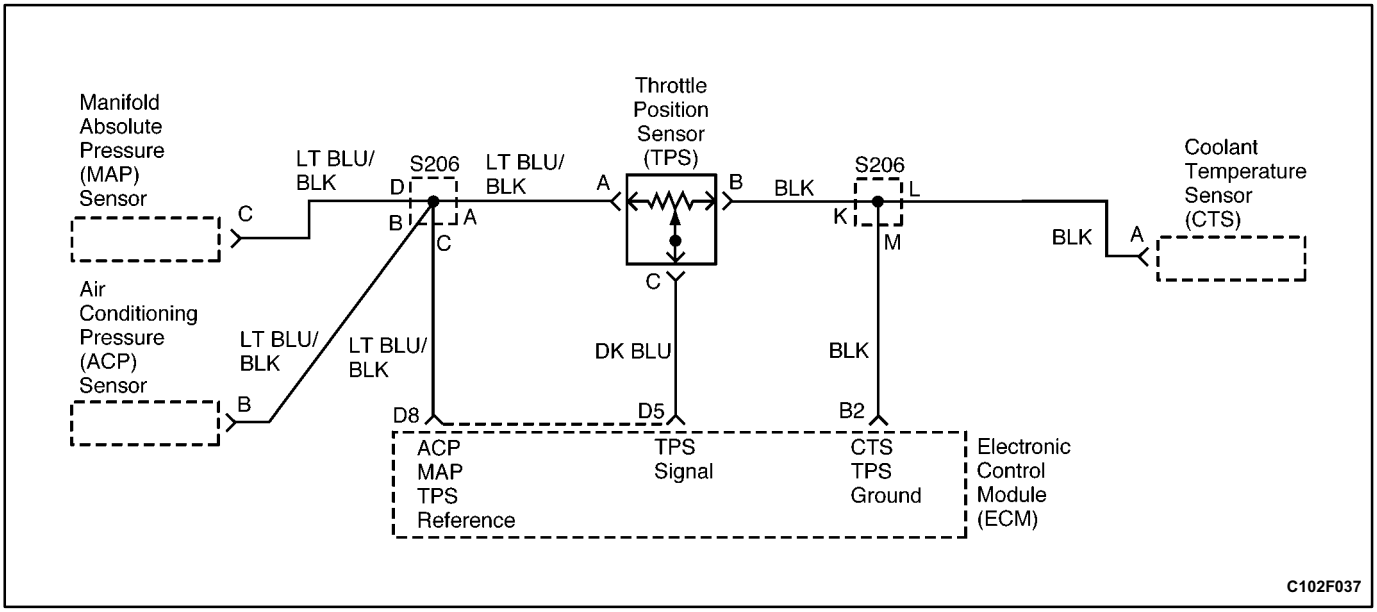

DIAGNOSTIC TROUBLE CODE (DTC) 22 THROTTLE POSITION SENSOR LOW (2.0L DOHC)

Circuit Description

The throttle position sensor (TPS) provides a voltage signal that changes in relation to the throttle plate angle. The signal voltage will vary from about 0.4 to 0.8 volt at idle to nearly 5.0 volts at wide open throttle. The TPS is one of the most important inputs used by the electronic control module (ECM) for fuel control and other functions such as idle, wide open throttle, deceleration enleanment, and acceleration enrichment.

DTC 22 Will Set When

- ✳ The throttle position sensor reading is less than 11 counts.
- ✳ Diagnostic trouble code (DTC) 33 and 34 are not set.

Diagnostic Aids

- ✳ Inspect the electronic control module connector (ECM) terminals and the throttle position sensor (TPS) connector terminals for improper mating and poor terminal to wire connections.
- ✳ Observe the TPS voltage on a scanner with the ignition ON and the engine stopped. Press the accelerator pedal while watching for smooth changes in the voltage readings of the TPS.

Test Description

The number(s) below refer to step(s) on the diagnostic table.

1. When measuring the voltage between the throttle position sensor (TPS) terminals A and B, 4.5 to 5.5 volts confirms the 5 volt reference and ground from the electronic control module (ECM) are OK.
11. If there is a problem with the voltage reference or the ground from the ECM, confirm that the wiring is OK. If there is no problem present in the wiring, the ECM is at fault.

DTC 22 - Throttle Position Sensor Low (2.0L DOHC)

Step	Action	Value(s)	Yes	No
1	Was the Diagnostic System Check performed?	-	Go to *Step 2*	Go to "Diagnostic System Check"
2	1. Connect the scan tool to the assembly line diagnostic link (ALDL). 2. Turn the ignition ON. 3. Operate the throttle lever from closed to open while watching the throttle position sensor (TPS) voltage on the scan tool. Does the scan tool show the TPS voltage change smoothly within the values specified?	0.10-0.90 V to 3.9-4.9 V	Go to "Diagnostic Aids"	Go to *Step 3*
3	1. Turn the ignition OFF. 2. Disconnect the TPS connector. 3. Turn the ignition ON. 4. Measure the voltage between the TPS connector terminals A and B. Is the voltage within the value specified?	4.5-5.5 V	Go to *Step 4*	Go to *Step 5*
4	Connect a fused jumper between the TPS connector terminals A and C. Does the scan tool show the TPS voltage above the value specified?	4 V	Go to *Step 10*	Go to *Step 8*
5	Measure the voltage between the TPS connector terminal A and the ground. Is the voltage within the value specified?	4.5-5.5 V	Go to *Step 6*	Go to *Step 7*
6	1. Turn the ignition OFF. 2. Check for an open in the wire between the TPS connector terminal B and the electronic control module (ECM) connector terminal B2. Is the problem found?	-	Go to *Step 9*	Go to *Step 11*
7	1. Turn the ignition OFF. 2. Check for an open or short to ground in the wire between the TPS connector terminal A and the ECM connector terminal D8. Is the problem found?	-	Go to *Step 9*	Go to *Step 11*
8	1. Turn the ignition OFF. 2. Check for an open or short to ground between the TPS connector terminal C and the ECM connector terminal D5. Is the problem found?	-	Go to *Step 9*	Go to *Step 11*
9	1. Repair the wire or the connector terminal as needed. 2. Clear any diagnostic trouble code(s) (DTCs) from the ECM. 3. Perform the Diagnostic System Check. Is the repair complete?	-	System OK	-
10	1. Replace the throttle position sensor. 2. Clear any DTCs from the ECM. 3. Perform the Diagnostic System Check. Is the repair complete?	-	System OK	-
11	1. Ignition OFF. 2. Replace the electronic control module. 3. Perform the Diagnostic System Check. Is the repair complete?	-	System OK	-

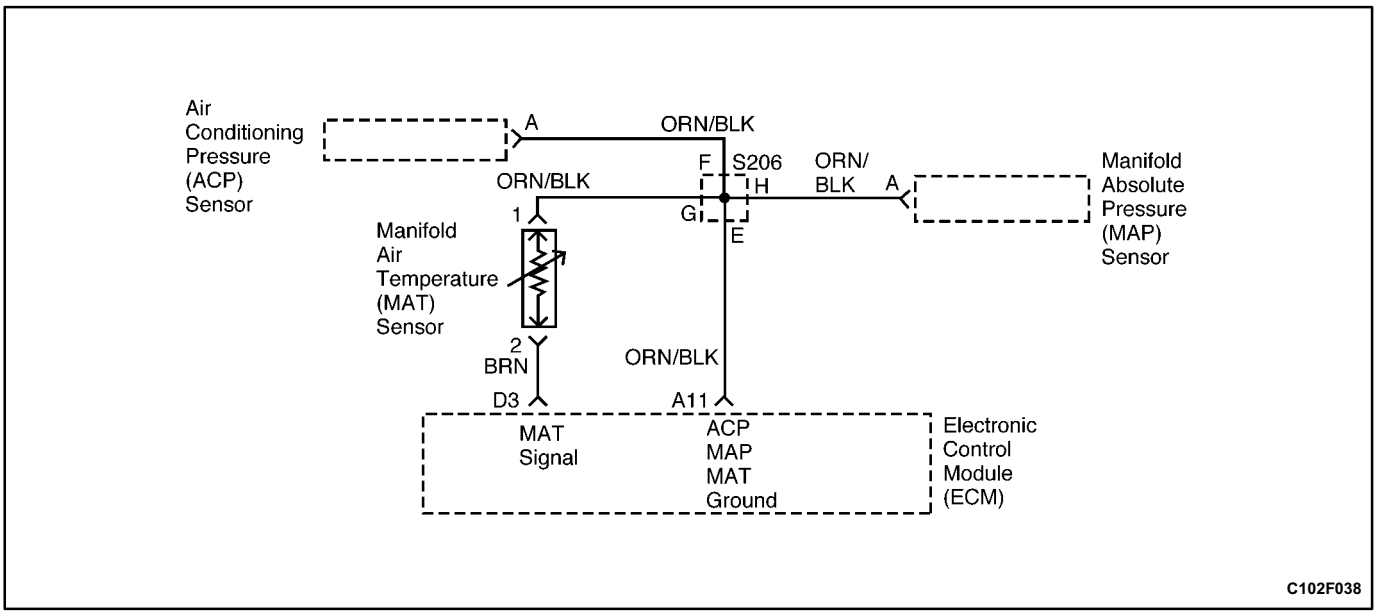

DIAGNOSTIC TROUBLE CODE (DTC) 23
MANIFOLD AIR TEMPERATURE HIGH (2.0L SOHC)

Circuit Description

The manifold air temperature (MAT) sensor is a thermistor which measures the temperature of the air entering the engine. The electronic control module (ECM) applies 5 volts through a pullup resistor to the MAT sensor. When the temperature is cold, the MAT sensor resistance is high and the ECM will monitor a high signal voltage on the MAT circuit. If the intake air is warm, the sensor resistance is lower, causing the ECM to monitor a lower voltage.

DTC 23 Will Set When

- The engine has been running longer than 50 seconds.
- The manifold air temperature (MAT) sensor signal voltage indicates a temperature above 150°C (302°F).

Diagnostic Aids

Inspect the wiring harness for damage. If the harness appears to be OK, observe the manifold air temperature (MAT) sensor display on the scan tool while moving the connectors and the wiring harnesses related to the MAT sensor. A change in the display will indicate the location of the fault.

MANIFOLD AIR TEMPERATURE SENSOR		
TEMPERATURE VS. RESISTANCE VALUES (APPROXIMATE)		
°C	°F	OHMS
100	212	177
90	194	241
80	176	332
70	158	467
60	140	667
50	122	973
45	113	1188
40	104	1459
35	95	1802
30	86	2238
25	77	2796
20	68	3520
15	59	4450
10	50	5670
5	41	7280
0	32	9420
−5	23	12300
−10	14	16180
−15	5	21450
−20	−4	28680
−30	−22	52700
−40	−40	100700

DTC 23 - Manifold Air Temperature Sensor High (2.0L SOHC)

Step	Action	Value(s)	Yes	No
1	Was the Diagnostic System Check performed?	-	Go to *Step 2*	Go to "Diagnostic System Check"
2	1. Connect the scan tool to the assembly line diagnostic link (ALDL). 2. Run the engine until it reaches operating temperature. Does the scan tool show the manifold air temperature (MAT) sensor reading within the value specified?	10°-80°C (50°-76°F)	Go to "Diagnostic Aids"	Go to *Step 3*
3	1. Turn the ignition OFF. 2. Disconnect the MAT sensor connector. 3. Turn the ignition ON. Does the scan tool show the MAT sensor reading below the value specified?	Lower Than −35°C (−31°F)	Go to *Step 4*	Go to *Step 5*
4	Check for a faulty connector or terminals at the MAT sensor connector. Is the problem found?	-	Go to *Step 7*	Go to *Step 8*
5	Check the wire for a short to ground between the MAT connector terminal 2 and the electronic control module (ECM) connector terminal D3. Is the problem found?	-	Go to *Step 7*	Go to *Step 6*
6	Check the wire for a short to ECM reference voltage between the MAT connector terminal 1 and the ECM connector terminal A11. Is the problem found?	-	Go to *Step 7*	Go to *Step 9*
7	1. Turn the ignition OFF. 2. Repair the wire or the connector terminal as needed. 3. Clear any diagnostic trouble code(s) (DTCs) from the ECM. 4. Run the engine until it reaches operating temperature. 5. Perform the Diagnostic System Check. Is the repair complete?	-	System OK	Go to *Step 2*
8	1. Turn the ignition OFF. 2. Replace the manifold air temperature sensor. 3. Clear any DTCs from the ECM. 4. Run the engine until it reaches operating temperature. 5. Perform the Diagnostic System Check. Is the repair complete?	-	System OK	-
9	1. Turn the ignition OFF. 2. Replace the ECM. 3. Run the engine until it reaches operating temperature. 4. Perform the Diagnostic System Check. Is the repair complete?	-	System OK	-

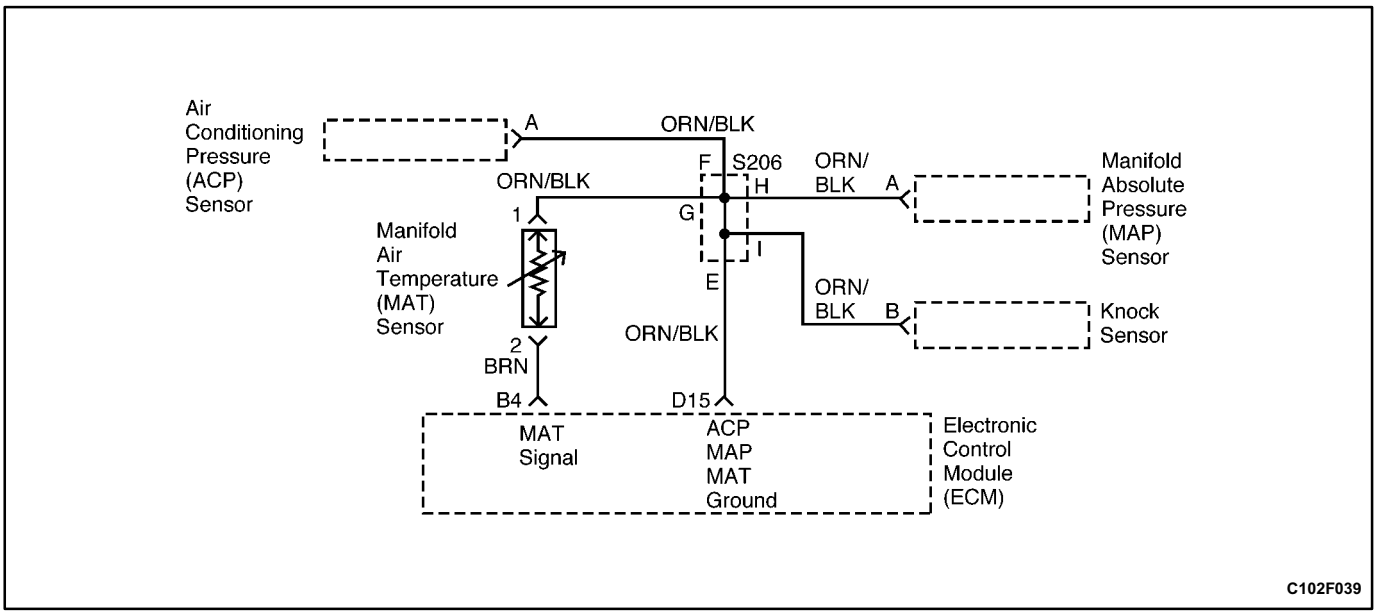

DIAGNOSTIC TROUBLE CODE (DTC) 23
MANIFOLD AIR TEMPERATURE HIGH (2.0L DOHC)

Circuit Description

The manifold air temperature (MAT) sensor is a thermistor which measures the temperature of the air entering the engine. The electronic control module (ECM) applies 5 volts through a pullup resistor to the MAT sensor. When the temperature is cold, the MAT sensor resistance is high and the ECM will monitor a high signal voltage on the MAT circuit. If the intake air is warm, the sensor resistance is lower, causing the ECM to monitor a lower voltage.

DTC 23 Will Set When

- The engine has been running longer than 120 seconds.
- The manifold air temperature (MAT) sensor signal voltage indicates a temperature above 140°C (284°F).

Diagnostic Aids

Inspect the wiring harness for damage. If the harness appears to be OK, observe the manifold air temperature (MAT) sensor display on the scan tool while moving the connectors and the wiring harnesses related to the MAT sensor. A change in the display will indicate the location of the fault.

MANIFOLD AIR TEMPERATURE SENSOR		
TEMPERATURE VS. RESISTANCE VALUES (APPROXIMATE)		
°C	°F	OHMS
100	212	177
90	194	241
80	176	332
70	158	467
60	140	667
50	122	973
45	113	1188
40	104	1459
35	95	1802
30	86	2238
25	77	2796
20	68	3520
15	59	4450
10	50	5670
5	41	7280
0	32	9420
– 5	23	12300
– 10	14	16180
– 15	5	21450
– 20	– 4	28680
– 30	– 22	52700
– 40	– 40	100700

DTC 23 - Manifold Air Temperature Sensor High (2.0L DOHC)

Step	Action	Value(s)	Yes	No
1	Was the Diagnostic System Check performed?	-	Go to *Step 2*	Go to "Diagnostic System Check"
2	1. Connect the scan tool to the assembly line diagnostic link (ALDL). 2. Run the engine until it reaches operating temperature. Does the scan tool show the manifold air temperature (MAT) sensor reading within the value specified?	10°-80°C (50°-76°F)	Go to "Diagnostic Aids"	Go to *Step 3*
3	1. Turn the ignition OFF. 2. Disconnect the MAT sensor connector. 3. Turn the ignition ON. Does the scan tool show the MAT sensor reading below the value specified?	Lower Than −35°C (−31°F)	Go to *Step 4*	Go to *Step 5*
4	Check for a faulty connector or terminals at the MAT sensor connector. Is the problem found?	-	Go to *Step 7*	Go to *Step 8*
5	Check the wire for a short to ground between the MAT connector terminal 2 and the electronic control module (ECM) connector terminal B4. Is the problem found?	-	Go to *Step 7*	Go to *Step 6*
6	Check the wire for a short to ECM reference voltage between the MAT connector terminal 1 and the ECM connector terminal D15. Is the problem found?	-	Go to *Step 7*	Go to *Step 9*
7	1. Turn the ignition OFF. 2. Repair the wire or the connector terminal as needed. 3. Clear any diagnostic trouble code(s) (DTCs) from the ECM. 4. Run the engine until it reaches operating temperature. 5. Perform the Diagnostic System Check. Is the repair complete?	-	System OK	Go to *Step 2*
8	1. Turn the ignition OFF. 2. Replace the manifold air temperature sensor. 3. Clear any DTCs from the ECM. 4. Run the engine until it reaches operating temperature. 5. Perform the Diagnostic System Check. Is the repair complete?	-	System OK	-
9	1. Turn the ignition OFF. 2. Replace the ECM. 3. Run the engine until it reaches operating temperature. 4. Perform the Diagnostic System Check. Is the repair complete?	-	System OK	-

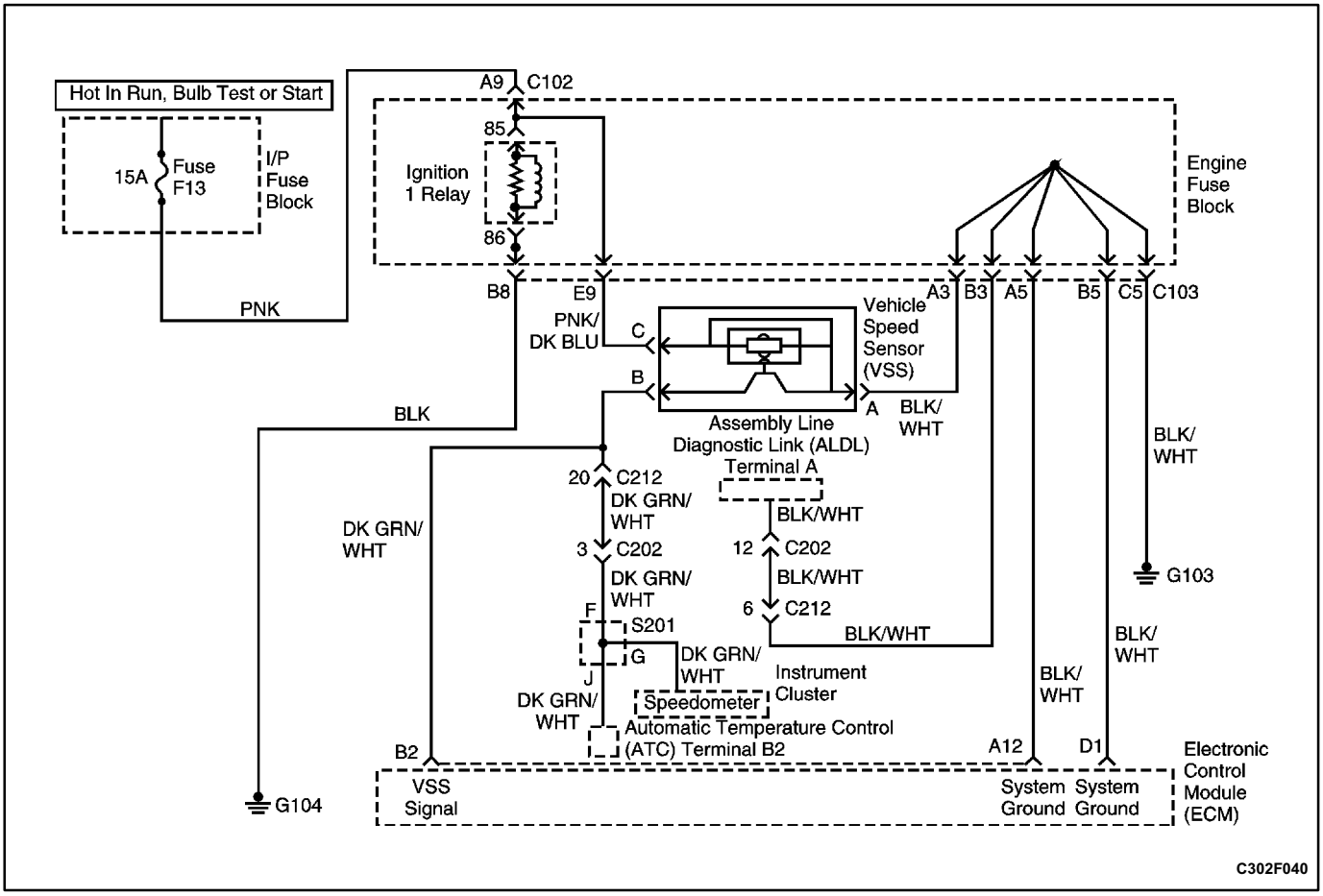

DIAGNOSTIC TROUBLE CODE (DTC) 24
VEHICLE SPEED SENSOR ERROR (2.0L SOHC)

Circuit Description

The electronic control module (ECM) applies and monitors 12 volts on the signal wire between the vehicle speed sensor (VSS) and the ECM. The signal wire connects to the vehicle speed sensor which alternately grounds the signal wire when the drive wheels are turning. This pulsing action takes place 2,289 times per kilometer (3,683 times per mile) and the ECM will calculate vehicle speed based on the time between the pulses. This information is also displayed by the vehicle speedometer.

DTC 24 Will Set When

- Diagnostic trouble code 34 is not set.
- The engine speed is between 1,600 rpm and 4,300 rpm.
- The vehicle speed sensor indicates a speed less than 8 km/h (5 mph).
- The manifold absolute pressure (MAP) sensor signal indicates less than 25 kPa (7.6 inches of Hg).
- These conditions are present for 5 seconds.

Diagnostic Aids

- Scan tool data should indicate a vehicle speed whenever the drive wheels are turning at more than 5 km/h (3 mph).

Test Description

The number(s) below refer to step(s) on the diagnostic table.

4. By momentarily touching the vehicle speed sensor (VSS) connector terminal B several times a second, a simulated VSS signal is created. If voltage and ground are present at the VSS, the VSS is faulty.

DTC 24 - Vehicle Speed Sensor Error (2.0L SOHC)

Step	Action	Value(s)	Yes	No
1	Was the Diagnostic System Check performed?	-	Go to *Step 2*	Go to "Diagnostic System Check"
2	1. Connect the scan tool to the assembly line diagnostic link (ALDL). 2. Road test the vehicle. Does the scan tool read vehicle speed?	-	Go to "Diagnostic Aids"	Go to *Step 3*
3	1. Turn the ignition OFF. 2. Disconnect the vehicle speed sensor (VSS) connector. 3. Turn the ignition ON. 4. Connect a test light between the VSS connector terminal B and ground. Is the test light on?	-	Go to *Step 9*	Go to *Step 4*
4	With a test light connected to ground, momentarily touch the VSS connector terminal B several times a second. Does the scan tool read vehicle speed?	-	Go to *Step 5*	Go to *Step 11*
5	Connect a test light between the VSS connector terminal C and ground. Is the test light on?	-	Go to *Step 6*	Go to *Step 7*
6	1. Turn the ignition OFF. 2. Connect a test light between the VSS connector terminal A and battery positive. Is the test light on?	-	Go to *Step 10*	Go to *Step 8*
7	Repair the open wire between the VSS connector terminal C and the ignition switch. Is the repair complete?	-	System OK	-
8	Repair the open wire between the VSS connector terminal A and ground. Is the repair complete?	-	System OK	-
9	Repair the short to voltage in the wire between the VSS connector terminal B and the electronic control module (ECM) connector terminal B2. Is the repair complete?	-	System OK	-
10	Replace the vehicle speed sensor. Is the repair complete?	-	System OK	-
11	1. Turn the ignition OFF. 2. Check for an open wire between the VSS connector terminal B and the ECM connector terminal B2. Is the problem found?	-	Go to *Step 12*	Go to *Step 13*
12	Repair the open wire between the VSS connector terminal B and the ECM connector terminal B2. Is the repair complete?	-	System OK	-
13	Replace the ECM. Is the repair complete?	-	System OK	-

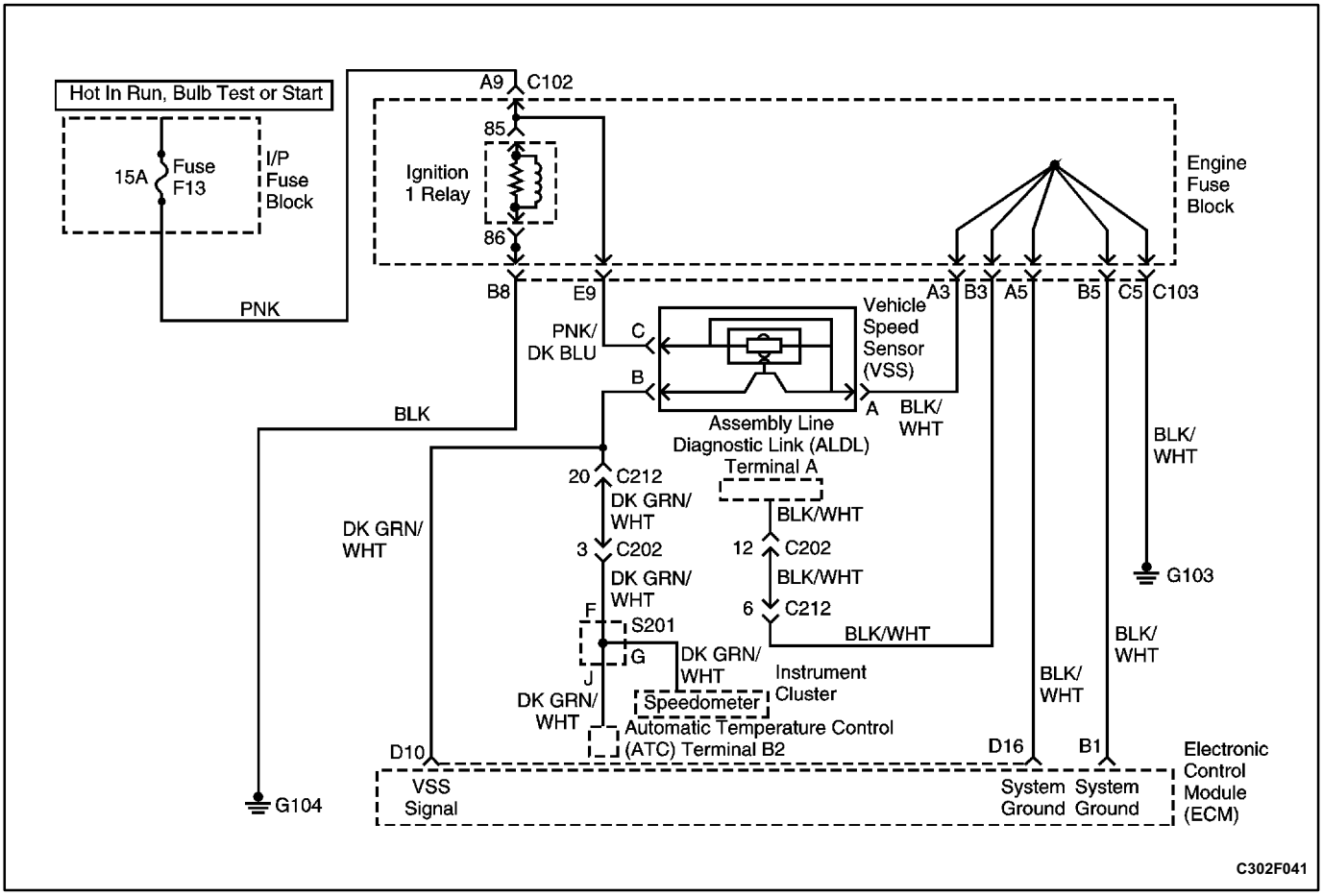

DIAGNOSTIC TROUBLE CODE (DTC) 24
VEHICLE SPEED SENSOR ERROR (2.0L DOHC)

Circuit Description

The electronic control module (ECM) applies and monitors 12 volts on the signal wire between the vehicle speed sensor (VSS) and the ECM. The signal wire connects to the vehicle speed sensor which alternately grounds the signal wire when the drive wheels are turning. This pulsing action takes place 2,289 times per kilometer (3,683 times per mile) and the ECM will calculate vehicle speed based on the time between the pulses. This information is also displayed by the vehicle speedometer.

DTC 24 Will Set When

- Diagnostic trouble code (DTC) 21, 22, 33 and 34 are not set.
- The engine speed is between 2,000 rpm and 5,000 rpm.
- The vehicle speed sensor indicates a speed less than 6 km/h (4 mph).
- The manifold absolute pressure sensor signal indicates less than 24 kPa (7 inches of Hg).
- These conditions are present for 4 seconds.

Diagnostic Aids

- Scan tool data should indicate a vehicle speed whenever the drive wheels are turning at more than 5 km/h (3 mph).

Test Description

The number(s) below refer to step(s) on the diagnostic table.

4. By momentarily touching the vehicle speed sensor (VSS) connector terminal B several times a second, a simulated VSS signal is created. If voltage and ground are present at the VSS, the VSS is faulty.

DTC 24 - Vehicle Speed Sensor Error (2.0L DOHC)

Step	Action	Value(s)	Yes	No
1	Was the Diagnostic System Check performed?	-	Go to *Step 2*	Go to "Diagnostic System Check"
2	1. Connect the scan tool to the assembly line diagnostic link (ALDL). 2. Road test the vehicle. Does the scan tool read vehicle speed?	-	Go to "Diagnostic Aids"	Go to *Step 3*
3	1. Turn the ignition OFF. 2. Disconnect the vehicle speed sensor (VSS) connector. 3. Turn the ignition ON. 4. Connect a test light between the VSS connector terminal B and ground. Is the test light on?	-	Go to *Step 9*	Go to *Step 4*
4	With a test light connected to ground, momentarily touch the VSS connector terminal B several times a second. Does the scan tool read vehicle speed?	-	Go to *Step 5*	Go to *Step 11*
5	Connect a test light between the VSS connector terminal C and ground. Is the test light on?	-	Go to *Step 6*	Go to *Step 7*
6	1. Turn the ignition OFF. 2. Connect a test light between the VSS connector terminal A and battery positive. Is the test light on?	-	Go to *Step 10*	Go to *Step 8*
7	Repair the open wire between the VSS connector terminal C and the ignition switch. Is the repair complete?	-	System OK	-
8	Repair the open wire between the VSS connector terminal A and ground. Is the repair complete?	-	System OK	-
9	Repair the short to voltage in the wire between the VSS connector terminal B and the electronic control module (ECM) connector terminal D10. Is the repair complete?	-	System OK	-
10	Replace the vehicle speed sensor. Is the repair complete?	-	System OK	-
11	1. Turn the ignition OFF. 2. Check for an open wire between the VSS connector terminal B and the ECM connector terminal D10. Is the problem found?	-	Go to *Step 12*	Go to *Step 13*
12	Repair the open wire between the VSS connector terminal B and the ECM connector terminal D10. Is the repair complete?	-	System OK	-
13	Replace the ECM. Is the repair complete?	-	System OK	-

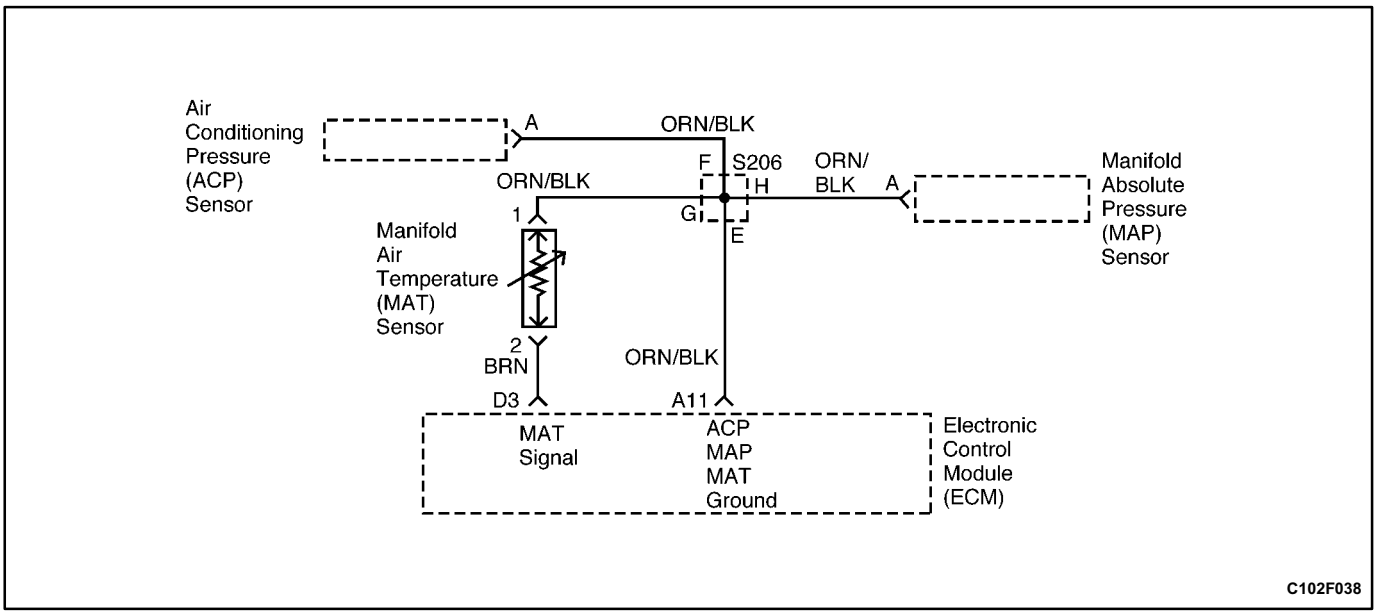

DIAGNOSTIC TROUBLE CODE (DTC) 25
MANIFOLD AIR TEMPERATURE LOW (2.0L SOHC)

Circuit Description

The manifold air temperature (MAT) sensor is a thermistor which measures the temperature of the air entering the engine. The electronic control module (ECM) applies 5 volts through a pull-up resistor to the MAT sensor. When the temperature is cold, the MAT sensor resistance is high and the ECM will monitor a high signal voltage on the MAT circuit. If the intake air is warm, the sensor resistance is lower, causing the ECM to monitor a lower voltage.

DTC 25 Will Set When

- The engine has been running longer than 50 seconds.
- The manifold air temperature (MAT) sensor signal voltage indicates a temperature less than −35°C (−31°F).

Diagnostic Aids

Inspect the wiring harness for damage. If the harness appears to be OK, observe the manifold air temperature (MAT) sensor display on the scan tool while moving the connectors and the wiring harnesses related to the MAT sensor. A change in the display will indicate the location of the fault.

Test Description

The number(s) below refer to step(s) on the diagnostic table.

6. This step checks for reference voltage and ground from the electronic control module (ECM).

MANIFOLD AIR TEMPERATURE SENSOR		
TEMPERATURE VS. RESISTANCE VALUES (APPROXIMATE)		
°C	°F	OHMS
100	212	177
90	194	241
80	176	332
70	158	467
60	140	667
50	122	973
45	113	1188
40	104	1459
35	95	1802
30	86	2238
25	77	2796
20	68	3520
15	59	4450
10	50	5670
5	41	7280
0	32	9420
−5	23	12300
−10	14	16180
−15	5	21450
−20	−4	28680
−30	−22	52700
−40	−40	100700

DTC 25 - Manifold Air Temperature Low (2.0L SOHC)

Step	Action	Value(s)	Yes	No
1	Was the Diagnostic System Check performed?	-	Go to *Step 2*	Go to "Diagnostic System Check"
2	1. Connect the scan tool to the assembly line diagnostic link (ALDL). 2. Run the engine until it reaches operating temperature. Does the scan tool show the manifold air temperature (MAT) sensor reading within the value specified?	10°-80°C (50°-176°F)	Go to "Diagnostic Aids"	Go to *Step 3*
3	1. Turn the ignition OFF. 2. Disconnect the MAT sensor connector. 3. Jumper the MAT connector terminals. 4. Turn the ignition ON. Does the scan tool show the MAT sensor reading above the value specified?	180°C (356°F)	Go to *Step 4*	Go to *Step 5*
4	Check for a faulty connector or terminals at the MAT sensor connector. Is the problem found?	-	Go to *Step 10*	Go to *Step 9*
5	Measure the voltage between terminals 1 and 2 of the MAT connector. Does the voltage measure within the value specified?	4.5-5.5 V	Go to *Step 11*	Go to *Step 6*
6	Measure the voltage between the MAT terminal 2 and the battery ground (negative) post. Does the voltage measure within the value specified?	4.5-5.5 V	Go to Step 7	Go to Step 8
7	1. Turn the ignition OFF. 2. Check for an open or short to battery voltage in the wire between the MAT connector terminal 1 and the electronic control module (ECM) connector terminal A11. Is the problem found?	-	Go to *Step 10*	Go to *Step 11*
8	1. Turn the ignition OFF. 2. Check for an open or short to battery voltage in the wire between the MAT connector terminal 2 and the ECM connector terminal D3. Is the problem found?	-	Go to *Step 10*	Go to *Step 11*
9	1. Turn the ignition OFF. 2. Replace the manifold air temperature sensor. 3. Clear any diagnostic trouble code(s) (DTCs) from the ECM. 4. Run the engine until it reaches operating temperature. 5. Perform the Diagnostic System Check. Is the repair complete?	-	System OK	-
10	1. Turn the ignition OFF. 2. Repair the wire or the connector terminal as needed. 3. Clear any DTCs from the ECM. 4. Run the engine until It reaches operating temperature. 5. Perform the Diagnostic System Check. Is the repair complete?	-	System OK	-
11	1. Replace the ECM. 2. Run the vehicle until it reaches operating temperature. 3. Perform the Diagnostic System Check.10°-80°C Is the repair complete?	-	System OK	-

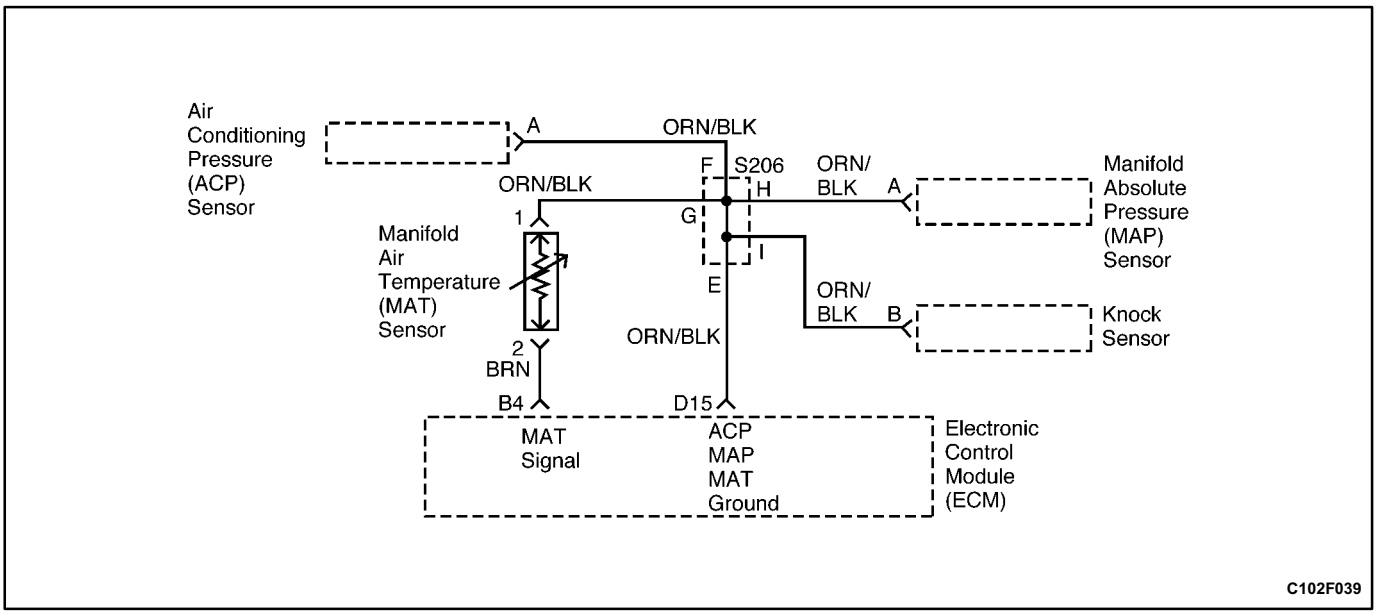

DIAGNOSTIC TROUBLE CODE (DTC) 25
MANIFOLD AIR TEMPERATURE LOW (2.0L DOHC)

Circuit Description

The manifold air temperature (MAT) sensor is a thermistor which measures the temperature of the air entering the engine. The electronic control module (ECM) applies 5 volts through a pull-up resistor to the MAT sensor. When the temperature is cold, the MAT sensor resistance is high and the ECM will monitor a high signal voltage on the MAT circuit. If the intake air is warm, the sensor resistance is lower, causing the ECM to monitor a lower voltage.

DTC 25 Will Set When

- The engine has been running longer than 120 seconds.
- The manifold air temperature (MAT) sensor signal voltage indicates a temperature less than −38.5°C (−37°F).

Diagnostic Aids

Inspect the wiring harness for damage. If the harness appears to be OK, observe the manifold air temperature (MAT) sensor display on the scan tool while moving the connectors and the wiring harnesses related to the MAT sensor. A change in the display will indicate the location of the fault.

Test Description

The number(s) below refer to step(s) on the diagnostic table.

6. This step checks for reference voltage and ground from the electronic control module (ECM).

MANIFOLD AIR TEMPERATURE SENSOR		
TEMPERATURE VS. RESISTANCE VALUES (APPROXIMATE)		
°C	°F	OHMS
100	212	177
90	194	241
80	176	332
70	158	467
60	140	667
50	122	973
45	113	1188
40	104	1459
35	95	1802
30	86	2238
25	77	2796
20	68	3520
15	59	4450
10	50	5670
5	41	7280
0	32	9420
−5	23	12300
−10	14	16180
−15	5	21450
−20	−4	28680
−30	−22	52700
−40	−40	100700

DTC 25 - Manifold Air Temperature Low (2.0L DOHC)

Step	Action	Value(s)	Yes	No
1	Was the Diagnostic System Check performed?	-	Go to *Step 2*	Go to "Diagnostic System Check"
2	1. Connect the scan tool to the assembly line diagnostic link (ALDL). 2. Run the engine until it reaches operating temperature. Does the scan tool show the manifold air temperature (MAT) sensor reading within the value specified?	10°-80°C (50°-176°F)	Go to "Diagnostic Aids"	Go to *Step 3*
3	1. Turn the ignition OFF. 2. Disconnect the MAT sensor connector. 3. Jumper the MAT connector terminals. 4. Turn the ignition ON. Does the scan tool show the MAT sensor reading above the value specified?	180°C (356°F)	Go to *Step 4*	Go to *Step 5*
4	Check for a faulty connector or terminals at the MAT sensor connector. Is the problem found?	-	Go to *Step 10*	Go to *Step 9*
5	Measure the voltage between terminals 1 and 2 of the MAT connector. Does the voltage measure within the value specified?	4.5-5.5 V	Go to *Step 11*	Go to *Step 6*
6	Measure the voltage between the MAT terminal 2 and the battery ground (negative) post. Does the voltage measure within the value specified?	4.5-5.5 V	Go to Step 7	Go to Step 8
7	1. Turn the ignition OFF. 2. Check for an open or short to battery voltage in the wire between the MAT connector terminal 1 and the electronic control module (ECM) connector terminal D15. Is the problem found?	-	Go to *Step 10*	Go to *Step 11*
8	1. Turn the ignition OFF. 2. Check for an open or short to battery voltage in the wire between the MAT connector terminal 2 and the ECM connector terminal B4. Is the problem found?	-	Go to *Step 10*	Go to *Step 11*
9	1. Turn the ignition OFF. 2. Replace the manifold air temperature sensor. 3. Clear any diagnostic trouble code(s) (DTCs) from the ECM. 4. Run the engine until it reaches operating temperature. 5. Perform the Diagnostic System Check. Is the repair complete?	-	System OK	-
10	1. Turn the ignition OFF. 2. Repair the wire or the connector terminal as needed. 3. Clear any DTCs from the ECM. 4. Run the engine until It reaches operating temperature. 5. Perform the Diagnostic System Check. Is the repair complete?	-	System OK	-
11	1. Replace the ECM. 2. Run the vehicle until it reaches operating temperature. 3. Perform the Diagnostic System Check. Is the repair complete?	-	System OK	-

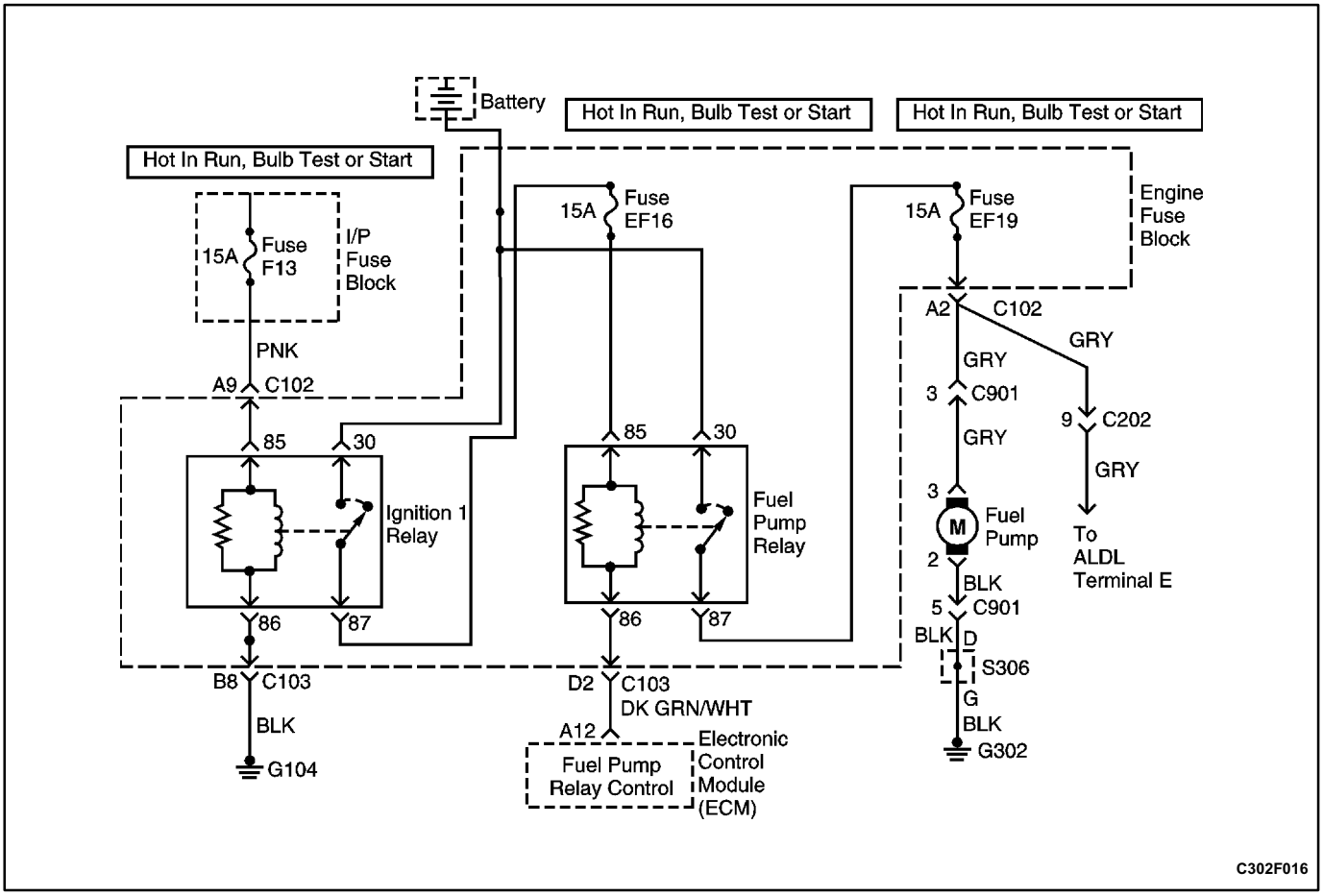

DIAGNOSTIC TROUBLE CODE (DTC) 29
FUEL PUMP RELAY SHORTED TO GROUND (2.0L DOHC)

Circuit Description

When the ignition is turned ON, the electronic control module (ECM) applies ground to the fuel pump relay coil side. The ECM will apply this ground for 2 seconds or until reference pulses are received by the ECM from the crankshaft position sensor. This activates the fuel pump relay, applying battery voltage to the fuel pump.

DTC 29 Will Set When

- The fuel pump relay circuit is shorted to ground for at least 1.6 seconds.

Diagnostic Aids

- Inspect the ECM wiring harness connectors for improper mating, broken locks, improperly formed or damaged terminals, a poor terminal-to-wire connection, and a damaged harness.
- If the connections and the wiring harness are in good condition, connect a test light between the fuel pump relay connector terminal 85 and battery positive while moving related connectors. If the fault is induced, the test light will turn on. This may help to isolate the location of an intermittent problem.

Test Description

The number(s) below refer to step(s) on the diagnostic table.

2. With the ignition OFF, the ECM should not be applying ground to the fuel pump relay.
3. If the test light is still on after disconnecting the ECM red connector, the wire between the fuel pump relay and the ECM is shorted to ground. If the test light goes off, the ECM is at fault.

DTC 29 - Fuel Pump Relay Shorted to Ground (2.0L DOHC)

Step	Action	Value(s)	Yes	No
1	Perform the Diagnostic System Check. Is the Diagnostic System Check complete?	-	Go to *Step 2*	-
2	1. Disconnect the fuel pump relay. 2. Connect a test light between the fuel pump relay connector terminal 86 and battery positive. Is the test light on?	-	Go to *Step 3*	Go to "Diagnostic Aids"
3	Disconnect the electronic control module (ECM) red connector. Is the test light on?	-	Go to *Step 4*	Go to *Step 5*
4	1. Repair the short to ground in the wire between the fuel pump relay connector terminal 86 and the ECM connector terminal A12. 2. Clear any diagnostic trouble codes (DTCs) from the ECM. 3. Perform the Diagnostic System Check. Is the repair complete?	-	System OK	-
5	1. Replace the ECM. 2. Perform the Diagnostic System Check. Is the repair complete?	-	System OK	-

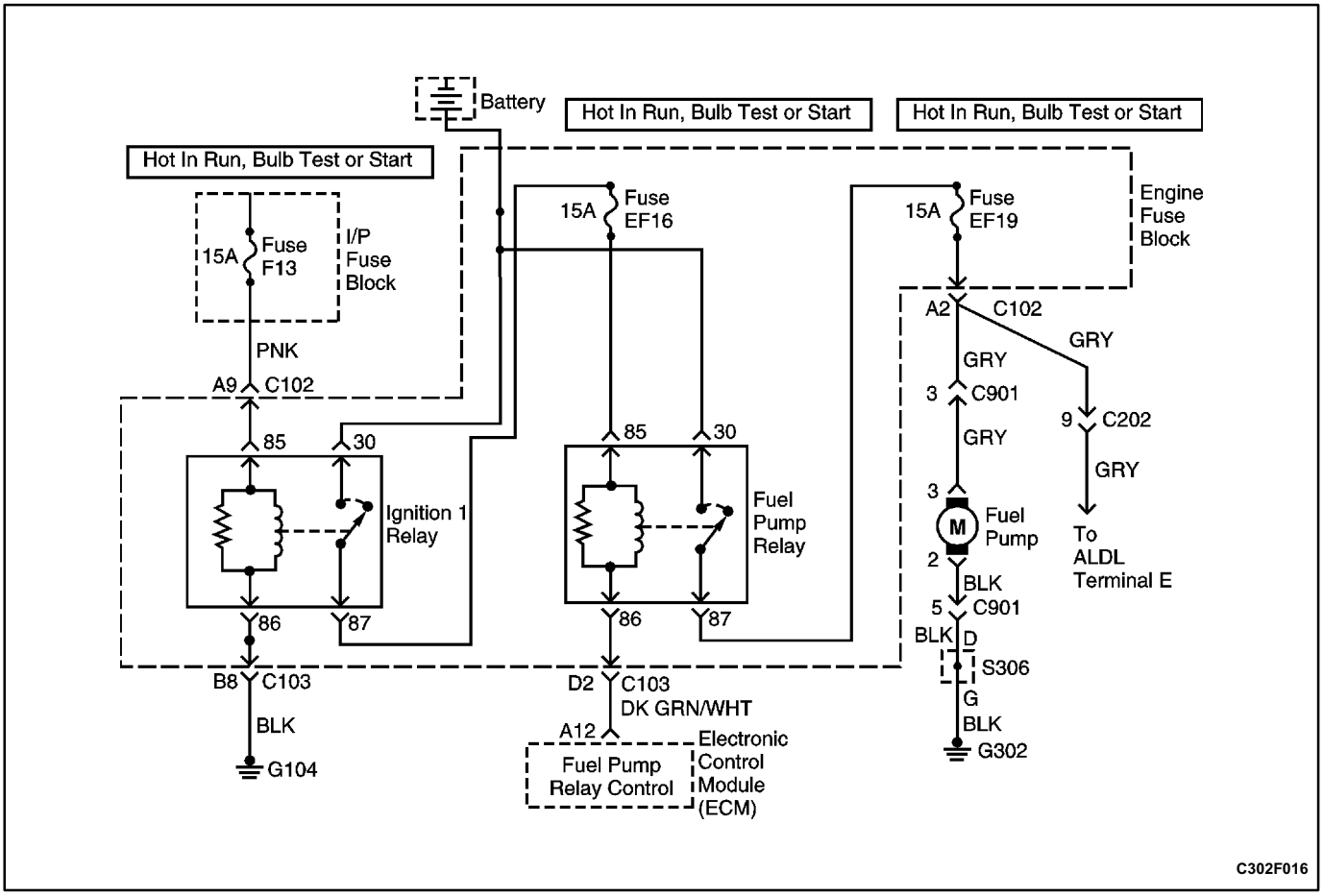

DIAGNOSTIC TROUBLE CODE (DTC) 32
FUEL PUMP RELAY SHORTED TO BATTERY (2.0L DOHC)

Circuit Description

When the ignition is turned ON, the electronic control module (ECM) applies ground to the fuel pump relay coil side. The ECM will apply this ground for 2 seconds or until reference pulses are received by the ECM from the crankshaft position sensor. This activates the fuel pump relay, applying battery voltage to the fuel pump.

DTC 32 Will Set When

- The fuel pump relay circuit is shorted to battery for at least 1.6 seconds.

Diagnostic Aids

- Inspect the ECM wiring harness connectors for improper mating, broken locks, improperly formed or damaged terminals, a poor terminal-to-wire connection, and a damaged harness.
- If the connections and the wiring harness are in good condition, connect a test light between the fuel pump relay connector terminal 85 and ground while moving related connectors. If the fault is induced, the test light will turn on. This may help to isolate the location of an intermittent problem.

Test Description

The number(s) below refer to step(s) on the diagnostic table.

4. If the test light is still on after disconnecting the ECM red connector, the wire between the fuel pump relay and the ECM is shorted to voltage. If the test light goes off, the ECM is at fault.

DTC 32 - Fuel Pump Relay Shorted to Battery (2.0L DOHC)

Step	Action	Value(s)	Yes	No
1	Perform the Diagnostic System Check. Is the Diagnostic System Check complete?	-	Go to *Step 2*	-
2	1. Disconnect the fuel pump relay. 2. Measure the resistance between the fuel pump relay terminals 85 and 86. Does the resistance measure near the value specified?	≈0 Ω	Go to *Step 6*	Go to *Step 3*
3	Connect a test light between the fuel pump relay connector terminal 86 and ground. Is the test light on?	-	Go to *Step 4*	Go to "Diagnostic Aids"
4	Disconnect the electronic control module (ECM) red connector. Is the test light on?	-	Go to *Step 5*	Go to *Step 7*
5	1. Repair the short to voltage in the wire between the fuel pump relay connector terminal 86 and the ECM connector terminal A12. 2. Clear any diagnostic trouble codes (DTCs) from the ECM. 3. Perform the Diagnostic System Check. Is the repair complete?	-	System OK	-
6	1. Replace the fuel pump relay. 2. Clear any DTCs from the ECM. 3. Perform the Diagnostic System Check. Is the repair complete?	-	System OK	-
7	1. Replace the ECM. 2. Perform the Diagnostic System Check. Is the repair complete?	-	System OK	-

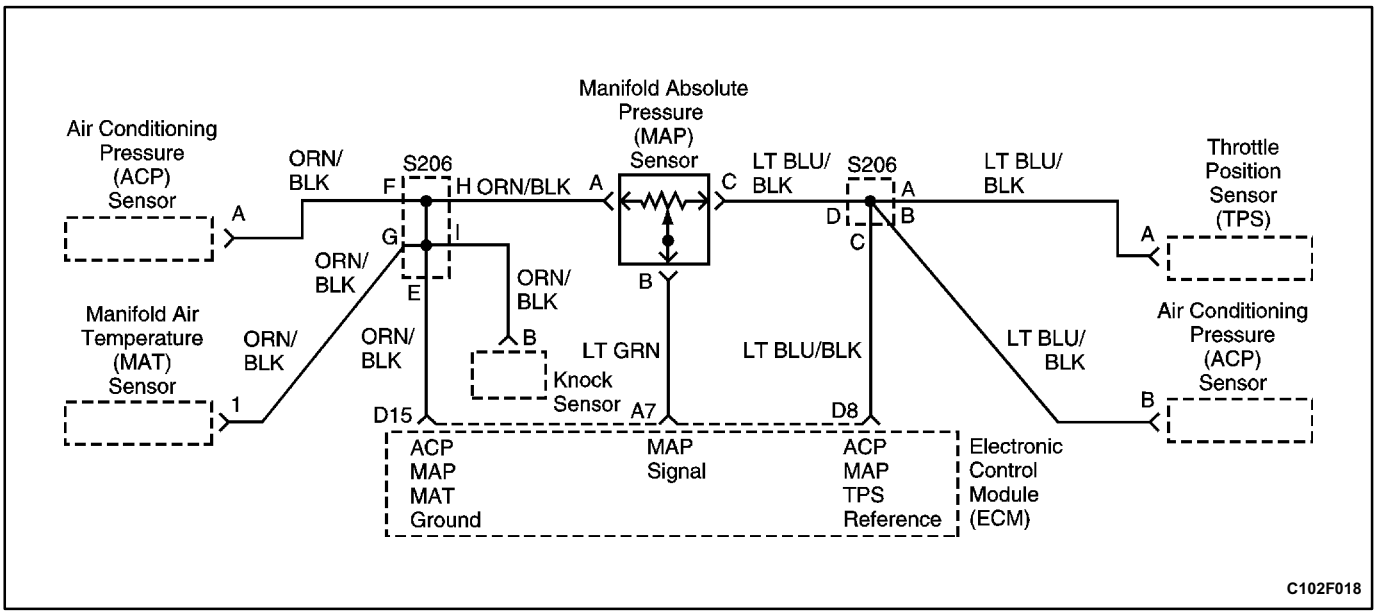

DIAGNOSTIC TROUBLE CODE (DTC) 33 MANIFOLD ABSOLUTE PRESSURE SENSOR HIGH (2.0L SOHC)

Circuit Description

The manifold absolute pressure (MAP) sensor responds to changes in the manifold vacuum. The electronic control module (ECM) receives this information as a signal voltage that will vary from about 1.0 to 1.5 volts at closed throttle (idle) to 4.5 to 5.0 volts at wide open throttle.

DTC 34 Will Set When

- Diagnostic trouble code (DTC) 21 is not set.
- DTC 22 is not set.
- The throttle angle is below 3 percent.
- The manifold absolute pressure (MAP) sensor signal indicates greater than 100 kPa (30.2 inches of Hg).
- These conditions are present for 3 seconds.

Diagnostic Aids

- If the connections are OK, monitor the manifold absolute pressure (MAP) sensor signal voltage while moving related connectors and the wiring harness. If the failure is induced, the display on the scan tool will change. This may help to isolate the location of an intermittent malfunction.
- With the ignition ON and the engine OFF, the MAP sensor pressure is equal to the atmospheric pressure. This information is used by the electronic control module (ECM) as an indication of altitude. Comparison of these readings with a known good vehicle with the same MAP sensor is a good way to check the accuracy of a questionable MAP sensor. The readings should be the same within 0.4 volt.

Test Description

The number(s) below refer to step(s) on the diagnostic table.

4. With the ignition ON and the engine OFF, the manifold absolute pressure (MAP) sensor is reading atmospheric or barometric pressure. If this reading is below 4 volts, the electronic control module (ECM) may prevent the engine from starting.
6. This step checks for a reference voltage and a ground from the ECM.
7. This step is checking the voltage reference and the signal return wire to the ECM. If the ECM recognizes the voltage reference and there is not a problem in the ground side of the circuit, the MAP sensor is faulty.

DTC 33 - Manifold Absolute Pressure Sensor High (2.0L SOHC)

Step	Action	Value(s)	Yes	No
1	Was the Diagnostic System Check performed?	-	Go to *Step 2*	Go to "Diagnostic System Check"
2	Check the vacuum line from the manifold absolute pressure (MAP) sensor for cracks, leaks, or restrictions. Is the problem found?	-	Go to *Step 3*	Go to *Step 4*
3	1. Repair or replace the vacuum line as needed. 2. Road test the vehicle. 3. Perform the Diagnostic System Check. Is the repair complete?	-	System OK	-
4	1. Connect the scan tool to the assembly line diagnostic link (ALDL). 2. Turn the ignition ON. Does the scan tool show the MAP sensor voltage above the value specified?	4 V	Go to *Step 5*	Go to *Step 6*
5	1. Disconnect the vacuum line from the MAP sensor. 2. Apply 68 kPa (20 in. of Hg) of vacuum to the MAP sensor. Does the scan tool show the MAP sensor voltage within the value specified?	1.0-1.5 V	Go to "Diagnostic Aids"	Go to *Step 6*
6	1. Turn the ignition OFF. 2. Disconnect the MAP sensor connector. 3. Turn the ignition ON. 4. Measure the voltage between MAP sensor connector terminals A and C. Does the voltage measure within the value specified?	4.5-5.5 V	Go to *Step 7*	Go to *Step 8*
7	Connect a fused jumper between the MAP sensor connector terminals B and C. Does the scan tool show the MAP sensor voltage above the value specified?	4 V	Go to *Step 13*	Go to *Step 11*
8	Measure the voltage between the MAP sensor connector terminal C and ground. Does the voltage measure within the value specified?	4.5-5.5 V	Go to *Step 9*	Go to *Step 10*
9	Check for a short to battery voltage in the wire between the MAP sensor connector terminal A and the electronic control module (ECM) connector terminal A11. Is the problem found?	-	Go to *Step 12*	Go to *Step 11*
10	Check for a short to battery voltage in the wire between the MAP sensor connector terminal C and the electronic control module (ECM) connector terminal B8. Is the problem found?	-	Go to *Step 12*	Go to *Step 14*
11	Check for a short to voltage in the wire between the MAP sensor connector terminal B and the ECM connector terminal A7. Is the problem found?	-	Go to *Step 12*	Go to *Step 14*

DTC 33 - Manifold Absolute Pressure Sensor High (2.0L SOHC) (Cont'd)

Step	Action	Value(s)	Yes	No
12	1. Repair the wire or the connector terminal as needed. 2. Clear diagnostic trouble code(s) (DTCs) from the ECM. 3. Perform the Diagnostic System Check. Is the repair complete?	-	System OK	Go to *Step 5*
13	1. Replace the manifold absolute pressure sensor. 2. Clear any DTCs from the ECM. 3. Perform the Diagnostic System Check. Is the repair complete?	-	System OK	-
14	1. Turn the ignition OFF. 2. Replace the ECM. 3. Perform the Diagnostic System Check. Is the repair complete?	-	System OK	-

BLANK

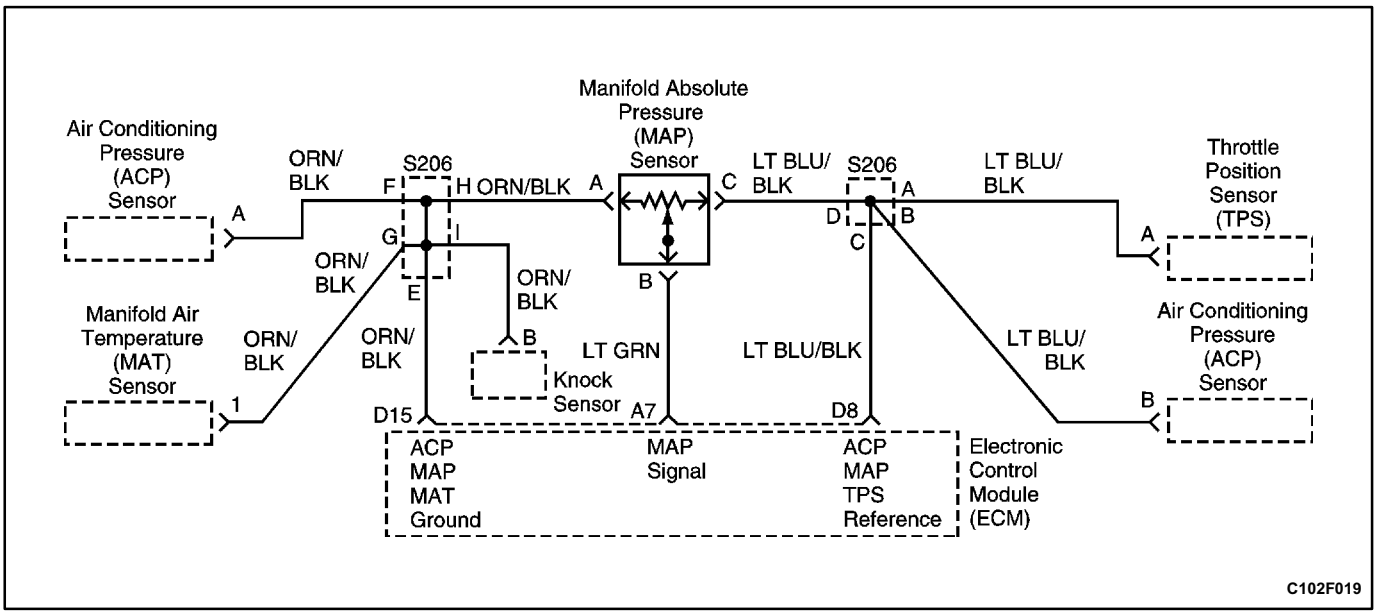

DIAGNOSTIC TROUBLE CODE (DTC) 33
MANIFOLD ABSOLUTE PRESSURE SENSOR HIGH (2.0L DOHC)

Circuit Description

The manifold absolute pressure (MAP) sensor responds to changes in the manifold vacuum. The electronic control module (ECM) receives this information as a signal voltage that will vary from about 1.0 to 1.5 volts at closed throttle (idle) to 4.5 to 5.0 volts at wide open throttle.

DTC 34 Will Set When

- Diagnostic trouble code (DTC) 21 is not set.
- DTC 22 is not set.
- The throttle angle is below 5 percent.
- The manifold absolute pressure (MAP) sensor signal indicates greater than 95 kPa (28 inches of Hg).
- These conditions are present for 5 seconds.

Diagnostic Aids

- If the connections are OK, monitor the manifold absolute pressure (MAP) sensor signal voltage while moving related connectors and the wiring harness. If the failure is induced, the display on the scan tool will change. This may help to isolate the location of an intermittent malfunction.
- With the ignition ON and the engine OFF, the MAP sensor pressure is equal to the atmospheric pressure. This information is used by the electronic control module (ECM) as an indication of altitude. Comparison of these readings with a known good vehicle with the same MAP sensor is a good way to check the accuracy of a questionable MAP sensor. The readings should be the same within 0.4 volt.

Test Description

The number(s) below refer to step(s) on the diagnostic table.

4. With the ignition ON and the engine OFF, the manifold absolute pressure (MAP) sensor is reading atmospheric or barometric pressure. If this reading is below 4 volts, the electronic control module (ECM) may prevent the engine from starting.
6. This step checks for a reference voltage and a ground from the ECM.
7. This step is checking the voltage reference and the signal return wire to the ECM. If the ECM recognizes the voltage reference and there is not a problem in the ground side of the circuit, the MAP sensor is faulty.

DTC 33 - Manifold Absolute Pressure Sensor High (2.0L DOHC)

Step	Action	Value(s)	Yes	No
1	Was the Diagnostic System Check performed?	-	Go to *Step 2*	Go to "Diagnostic System Check"
2	Check the vacuum line from the manifold absolute pressure (MAP) sensor for cracks, leaks, or restrictions. Is the problem found?	-	Go to *Step 3*	Go to *Step 4*
3	1. Repair or replace the vacuum line as needed. 2. Road test the vehicle. 3. Perform the Diagnostic System Check. Is the repair complete?	-	System OK	-
4	1. Connect the scan tool to the assembly line diagnostic link (ALDL). 2. Turn the ignition ON. Does the scan tool show the MAP sensor voltage above the value specified?	4 V	Go to *Step 5*	Go to *Step 6*
5	1. Disconnect the vacuum line from the MAP sensor. 2. Apply 68 kPa (20 in. of Hg) of vacuum to the MAP sensor. Does the scan tool show the MAP sensor voltage within the value specified?	1.0-1.5 V	Go to "Diagnostic Aids"	Go to *Step 6*
6	1. Turn the ignition OFF. 2. Disconnect the MAP sensor connector. 3. Turn the ignition ON. 4. Measure the voltage between MAP sensor connector terminals A and C. Does the voltage measure within the value specified?	4.5-5.5 V	Go to *Step 7*	Go to *Step 8*
7	Connect a fused jumper between the MAP sensor connector terminals B and C. Does the scan tool show the MAP sensor voltage above the value specified?	4 V	Go to *Step 13*	Go to *Step 11*
8	Measure the voltage between the MAP sensor connector terminal C and ground. Does the voltage measure within the value specified?	4.5-5.5 V	Go to *Step 9*	Go to *Step 10*
9	Check for a short to battery voltage in the wire between the MAP sensor connector terminal A and the electronic control module (ECM) connector terminal D15. Is the problem found?	-	Go to *Step 12*	Go to *Step 11*
10	Check for a short to battery voltage in the wire between the MAP sensor connector terminal C and the ECM connector terminal D8. Is the problem found?	-	Go to *Step 12*	Go to *Step 14*
11	Check for a short to voltage in the wire between the MAP sensor connector terminal B and the ECM connector terminal A7. Is the problem found?	-	Go to *Step 12*	Go to *Step 14*

DTC 33 - Manifold Absolute Pressure Sensor High (2.0L DOHC) (Cont'd)

Step	Action	Value(s)	Yes	No
12	1. Repair the wire or the connector terminal as needed. 2. Clear any diagnostic trouble code(s) (DTCs) from the ECM. 3. Perform the Diagnostic System Check. Is the repair complete?	-	System OK	Go to *Step 5*
13	1. Replace the manifold absolute pressure sensor. 2. Clear any DTCs from the ECM. 3. Perform the Diagnostic System Check. Is the repair complete?	-	System OK	-
14	1. Turn the ignition OFF. 2. Replace the ECM. 3. Perform the Diagnostic System Check. Is the repair complete?	-	System OK	-

BLANK

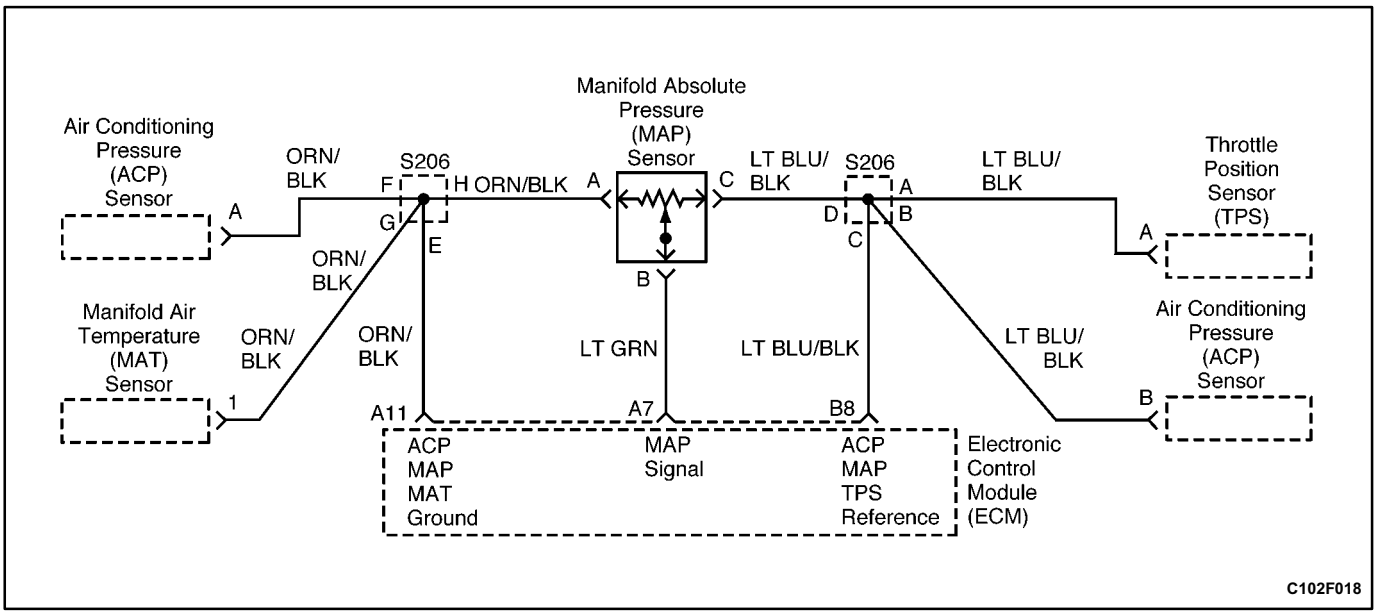

DIAGNOSTIC TROUBLE CODE (DTC) 34 MANIFOLD ABSOLUTE PRESSURE SENSOR LOW (2.0L SOHC)

Circuit Description

The manifold absolute pressure (MAP) sensor responds to changes in the manifold vacuum. The electronic control module (ECM) receives this information as a signal voltage that will vary from about 1.0 to 1.5 volts at closed throttle (idle) to 4.5 to 5.0 volts at wide open throttle.

DTC 34 Will Set When

- Diagnostic trouble code (DTC) 21 is not set.
- DTC 22 is not set.
- The engine speed is less than 1,200 rpm or the engine speed is greater than 1,200 rpm and the throttle angle is greater than 15 percent.
- The manifold absolute pressure (MAP) sensor signal voltage indicates less the 15 kPa (4.5 inches of Hg).
- These conditions have been present for 0.1 second.

Diagnostic Aids

- If the connections are OK, monitor the manifold absolute pressure (MAP) sensor signal voltage while moving related connectors and the wiring harness. If the failure is induced, the display on the scan tool will change. This may help to isolate the location of an intermittent malfunction.
- With the ignition ON and the engine OFF, the MAP sensor pressure is equal to the atmospheric pressure. This information is used by the electronic control module (ECM) as an indication of altitude. Comparison of these readings with a known good vehicle with the same MAP sensor is a good way to check the accuracy of a questionable MAP sensor. The readings should be the same within 0.4 volt.

Test Description

The number(s) below refer to step(s) on the diagnostic table.

2. With the ignition ON and the engine OFF, the manifold absolute pressure (MAP) sensor is reading atmospheric or barometric pressure. If this reading is below 4 volts, the electronic control module (ECM) may prevent the engine from starting.
4. This step checks for a reference voltage and a ground from the ECM.
5. This step is checking the voltage reference and the signal return wire to the ECM. If the ECM recognizes the voltage reference and there is not a problem in the ground side of the circuit, the MAP sensor is faulty.

DTC 34 - Manifold Absolute Pressure Sensor Low (2.0L SOHC)

Step	Action	Value(s)	Yes	No
1	Was the Diagnostic System Check performed?	-	Go to *Step 2*	Go to "Diagnostic System Check"
2	1. Connect the scan tool to the assembly line diagnostic link (ALDL). 2. Turn the ignition ON. Does the scan tool show the manifold absolute pressure (MAP) sensor voltage above the value specified?	4 V	Go to *Step 3*	Go to *Step 4*
3	1. Disconnect the vacuum line from the MAP sensor. 2. Apply 68 kPa (20 in. of Hg) of vacuum to the MAP sensor. Does the scan tool show the MAP sensor voltage within the value specified?	1.0-1.5 V	Go to "Diagnostic Aids"	Go to *Step 4*
4	1. Turn the ignition OFF. 2. Disconnect the MAP sensor connector. 3. Turn the ignition ON. 4. Measure the voltage between the MAP sensor connector terminals A and C. Does the voltage measure within the value specified?	4.5-5.5 V	Go to *Step 5*	Go to *Step 6*
5	Connect a fused jumper between the MAP sensor connector terminals B and C. Does the scan tool show the MAP sensor voltage above the value specified?	4 V	Go to *Step 11*	Go to *Step 9*
6	Measure the voltage between the MAP sensor connector terminal C and ground. Does the voltage measure within the value specified?	4.5-5.5 V	Go to *Step 7*	Go to *Step 8*
7	1. Turn the ignition OFF. 2. Check for an open wire between the MAP sensor connector terminal A and the electronic control module (ECM) connector terminal A11. Is the problem found?	-	Go to *Step 10*	Go to *Step 12*
8	1. Turn the ignition OFF. 2. Check for an open or short to ground in the wire between the MAP sensor connector terminal C and the ECM connector terminal B8. Is the problem found?	-	Go to *Step 10*	Go to *Step 12*
9	1. Turn the ignition OFF. 2. Check for an open or short to ground in the wire between the MAP sensor connector terminal B and the ECM connector terminal A7. Is the problem found?	-	Go to *Step 10*	Go to *Step 12*
10	1. Repair the wire or the connector terminal as needed. 2. Clear any diagnostic trouble code(s) (DTCs) from the ECM. 3. Perform the Diagnostic System Check. Is the repair complete?	-	System OK	-

DTC 34 - Manifold Absolute Pressure Sensor Low (2.0L SOHC) (Cont'd)

Step	Action	Value(s)	Yes	No
11	1. Replace the manifold absolute pressure sensor. 2. Clear any DTCs from the ECM. 3. Perform the Diagnostic System Check. Is the repair complete?	-	System OK	-
12	1. Turn the ignition OFF. 2. Replace the ECM. 3. Perform the Diagnostic System Check. Is the repair complete?	-	System OK	-

BLANK

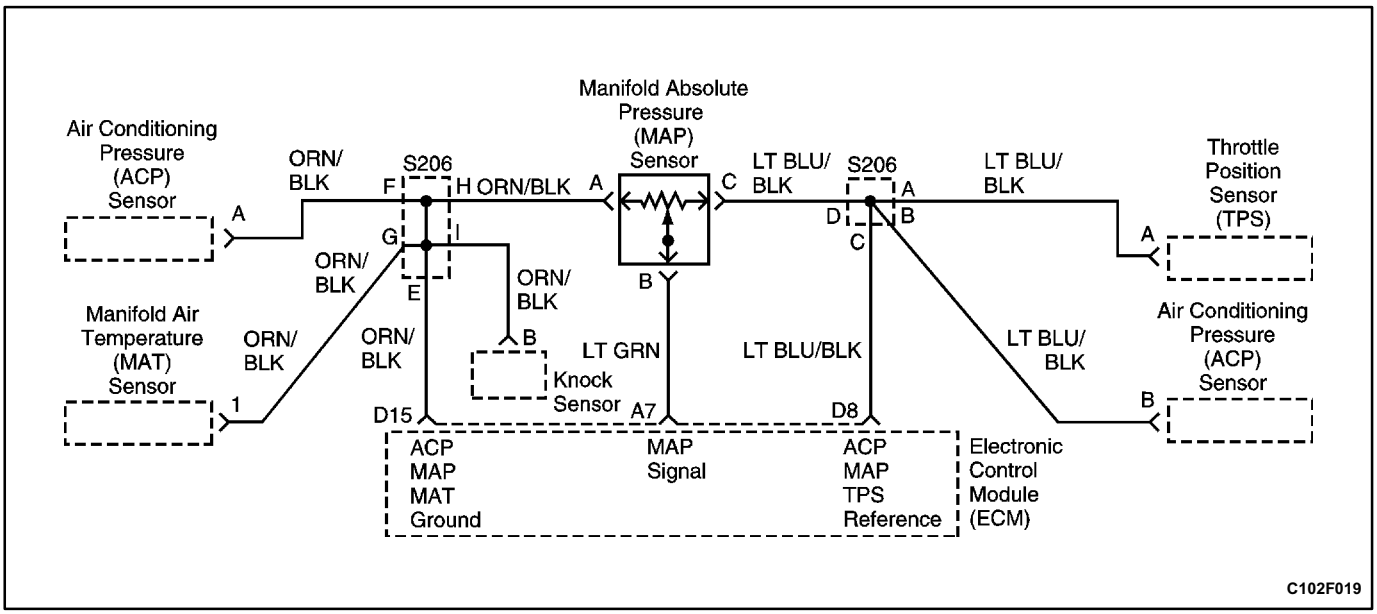

DIAGNOSTIC TROUBLE CODE (DTC) 34 MANIFOLD ABSOLUTE PRESSURE SENSOR LOW (2.0L DOHC)

Circuit Description

The manifold absolute pressure (MAP) sensor responds to changes in the manifold vacuum. The electronic control module (ECM) receives this information as a signal voltage that will vary from about 1.0 to 1.5 volts at closed throttle (idle) to 4.5 to 5.0 volts at wide open throttle.

DTC 34 Will Set When

- Diagnostic trouble code (DTC) 21 and 22 are not set.
- The engine speed is less than 1,050 rpm, or the engine speed is greater than 1,050 rpm and the throttle angle is greater than 18.8 percent.
- The manifold absolute pressure (MAP) sensor signal voltage indicates less than 14 kPa (4.0 inches of Hg).
- These conditions have been present for 1 second.

Diagnostic Aids

- If the connections are OK, monitor the manifold absolute pressure (MAP) sensor signal voltage while moving related connectors and the wiring harness. If the failure is induced, the display on the scan tool will change. This may help to isolate the location of an intermittent malfunction.
- With the ignition ON and the engine OFF, the MAP sensor pressure is equal to the atmospheric pressure. This information is used by the electronic control module (ECM) as an indication of altitude. Comparison of these readings with a known good vehicle with the same MAP sensor is a good way to check the accuracy of a questionable MAP sensor. The readings should be the same within 0.4 volt.

Test Description

The number(s) below refer to step(s) on the diagnostic table.

2. With the ignition ON and the engine OFF, the manifold absolute pressure (MAP) sensor is reading atmospheric or barometric pressure. If this reading is below 4 volts, the electronic control module (ECM) may prevent the engine from starting.
4. This step checks for a reference voltage and a ground from the ECM.
5. This step is checking the voltage reference and the signal return wire to the ECM. If the ECM recognizes the voltage reference and there is not a problem in the ground side of the circuit, the MAP sensor is faulty.

DTC 34 - Manifold Absolute Pressure Sensor Low (2.0L DOHC)

Step	Action	Value(s)	Yes	No
1	Was the Diagnostic System Check performed?	-	Go to *Step 2*	Go to "Diagnostic System Check"
2	1. Connect the scan tool to the assembly line diagnostic link (ALDL). 2. Turn the ignition ON. Does the scan tool show the manifold absolute pressure (MAP) sensor voltage above the value specified?	4 V	Go to *Step 3*	Go to *Step 4*
3	1. Disconnect the vacuum line from the MAP sensor. 2. Apply 68 kPa (20 in. of Hg) of vacuum to the MAP sensor. Does the scan tool show the MAP sensor voltage within the value specified?	1.0-1.5 V	Go to "Diagnostic Aids"	Go to *Step 4*
4	1. Turn the ignition OFF. 2. Disconnect the MAP sensor connector. 3. Turn the ignition ON. 4. Measure the voltage between the MAP sensor connector terminals A and C. Does the voltage measure within the value specified?	4.5-5.5 V	Go to *Step 5*	Go to *Step 6*
5	Connect a fused jumper between the MAP sensor connector terminals B and C. Does the scan tool show the MAP sensor voltage above the value specified?	4 V	Go to *Step 11*	Go to *Step 9*
6	Measure the voltage between the MAP sensor connector terminal C and ground. Does the voltage measure within the value specified?	4.5-5.5 V	Go to *Step 7*	Go to *Step 8*
7	1. Turn the ignition OFF. 2. Check for an open wire between the MAP sensor connector terminal A and the electronic control module (ECM) connector terminal D15. Is the problem found?	-	Go to *Step 10*	Go to *Step 12*
8	1. Turn the ignition OFF. 2. Check for an open or short to ground in the wire between the MAP sensor connector terminal C and the ECM connector terminal D8. Is the problem found?	-	Go to *Step 10*	Go to *Step 12*
9	1. Turn the ignition OFF. 2. Check for an open or short to ground in the wire between the MAP sensor connector terminal B and the ECM connector terminal A7. Is the problem found?	-	Go to *Step 10*	Go to *Step 12*
10	1. Repair the wire or the connector terminal as needed. 2. Clear any diagnostic trouble code(s) (DTCs) from the ECM. 3. Perform the Diagnostic System Check. Is the repair complete?	-	System OK	-

DTC 34 - Manifold Absolute Pressure Sensor Low (2.0L DOHC) (Cont'd)

Step	Action	Value(s)	Yes	No
11	1. Replace the manifold absolute pressure sensor. 2. Clear any DTCs from the ECM. 3. Perform the Diagnostic System Check. Is the repair complete?	-	System OK	-
12	1. Turn the ignition OFF. 2. Replace the ECM. 3. Perform the Diagnostic System Check. Is the repair complete?	-	System OK	-

BLANK

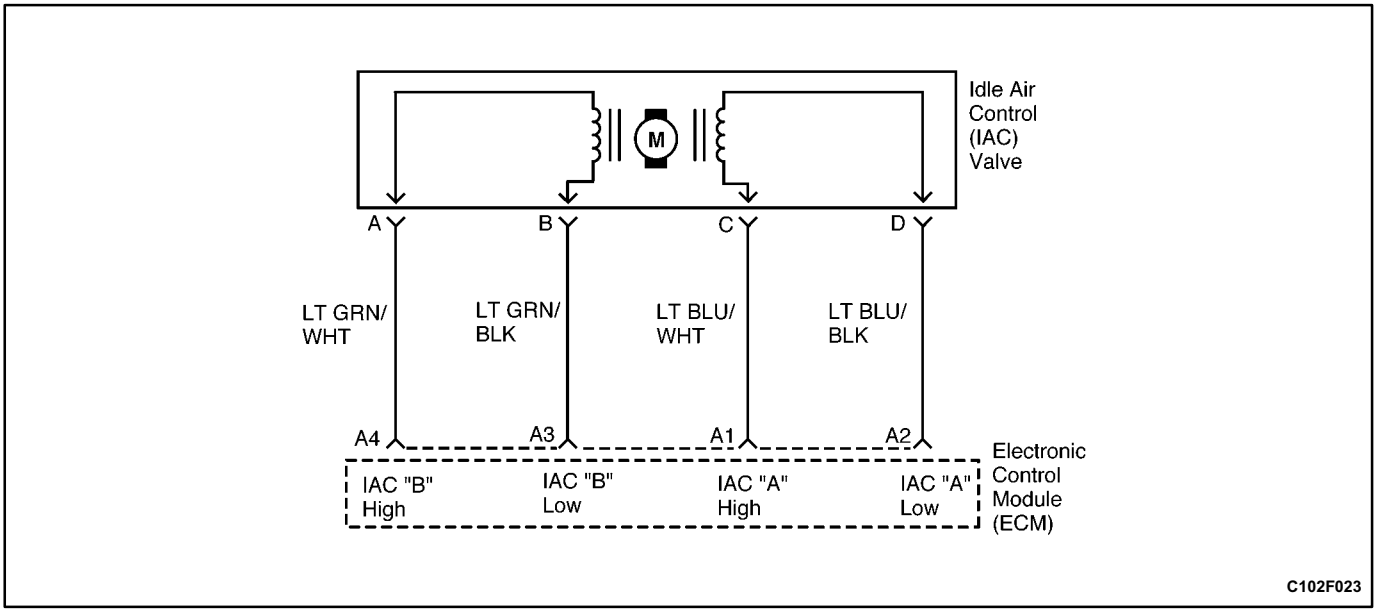

DIAGNOSTIC TROUBLE CODE (DTC) 35
IDLE AIR CONTROL ERROR (2.0L DOHC)

Circuit Description

The electronic control module (ECM) controls the idle speed to a calculated rpm based on inputs and the actual engine rpm. This is determined by the ignition reference pulses received by the ECM from the crankshaft position sensor. The ECM uses four circuits to move the idle air control (IAC) valve. The IAC valve allows varying amounts of air to flow into the intake manifold, controlling the idle speed.

DTC 35 Will Set When

- Diagnostic trouble code (DTC) 21 and 22 are not set.
- DTC 24 is not set.
- The throttle is closed.
- The engine speed is 175 rpm above or below the commanded idle speed for at least 20 seconds.

Diagnostic Aids

- Inspect for vacuum leaks, unconnected or brittle vacuum hoses, cuts, etc.
- Inspect the intake manifold and the throttle body gaskets for proper sealing.
- An idle air control (IAC) valve which does not respond to the electronic control module (ECM), an incorrect base idle adjustment, a damaged throttle body, or damage to the throttle body linkage could create the conditions for setting diagnostic trouble code 35.

DTC 35 - Idle Air Control Error (2.0L DOHC)

Step	Action	Value(s)	Yes	No
1	Was the Diagnostic System Check performed?	-	Go to *Step 2*	Go to "Diagnostic System Check"
2	1. Turn the ignition OFF. 2. Connect the scan tool to the assembly line diagnostic link (ALDL). 3. Monitor the engine rpm. 4. Disconnect the idle air control (IAC) valve connector. 5. Connect the IAC driver to the IAC valve. 6. Start the engine allow the engine to idle in P (PARK) (NEUTRAL for manual transaxle) with the A/C off and the parking brake applied. 7. Using the IAC driver, extend and retract the IAC valve. Does the rpm change as the IAC driver is cycled?	-	Go to *Step 5*	Go to *Step 3*
3	1. Turn the ignition OFF. 2. Disconnect the IAC driver from the IAC valve. 3. Remove the IAC valve from the throttle body. 4. Inspect the IAC passages for restrictions. Are the IAC passages restricted?	-	Go to *Step 4*	Go to *Step 14*
4	1. Clean the IAC passages. 2. Clear any diagnostic trouble code(s) (DTCs) from the electronic control module (ECM). 3. Perform the IAC valve reset procedure. 4. Perform the Diagnostic System Check. Is the repair complete?	-	System OK	-
5	Cycle the IAC driver while monitoring the engine rpm. Does the rpm change smoothly within the value specified with each flash of the IAC driver?	700-1500 rpm	Go to *Step 6*	Go to *Step 3*
6	1. Turn the ignition OFF. 2. Connect the IAC node light to the IAC connector. 3. Start the engine and cycle the IAC driver. Do both lights of the IAC node light cycle red and green but never turn off as the rpm is changed using the IAC driver?	-	Go to *Step 7*	Go to *Step 9*
7	1. Turn the ignition OFF. 2. Disconnect the IAC driver from the IAC valve. 3. Measure the resistance between IAC terminals A and B, then C and D. Is the resistance within the value specified?	40-80 Ω	Go to *Step 8*	Go to *Step 14*
8	Measure the resistance between IAC terminals B and C, then A and D. Does the resistance match the specified value?	∞	Go to "Diagnostic Aids"	Go to *Step 14*
9	1. Turn the ignition OFF. 2. Disconnect the IAC node light from the IAC valve connector. 3. Check for faulty connector terminals. Is the problem found?	-	Go to *Step 13*	Go to *Step 10*

DTC 35 - Idle Air Control Error (2.0L DOHC) (Cont'd)

Step	Action	Value(s)	Yes	No
10	Check for any open circuits, including connections, between the IAC valve connector terminals and the ECM. Is the problem found?	-	Go to *Step 13*	Go to *Step 11*
11	Check for a short to ground between the IAC valve connector terminals and the ECM. Is the problem found?	-	Go to *Step 13*	Go to *Step 12*
12	1. Turn the ignition ON. 2. Check for a short to voltage between the IAC valve connector terminals and the ECM. Is the problem found?	-	Go to *Step 13*	Go to *Step 15*
13	1. Turn the ignition OFF. 2. Repair the wire or the connector terminal as needed. 3. Clear any DTCs from the ECM. 4. Perform the IAC valve reset procedure. 5. Perform the Diagnostic System Check. Is the repair complete?	-	System OK	-
14	1. Replace the idle air control valve. 2. Clear any DTCs from the ECM. 3. Perform the IAC valve reset procedure. 4. Perform the Diagnostic System Check. Is the repair complete?	-	System OK	-
15	1. Replace the ECM. 2. Clear any DTCs from the ECM. 3. Perform the IAC valve reset procedure. 4. Perform the Diagnostic System Check. Is the repair complete?	-	System OK	-

BLANK

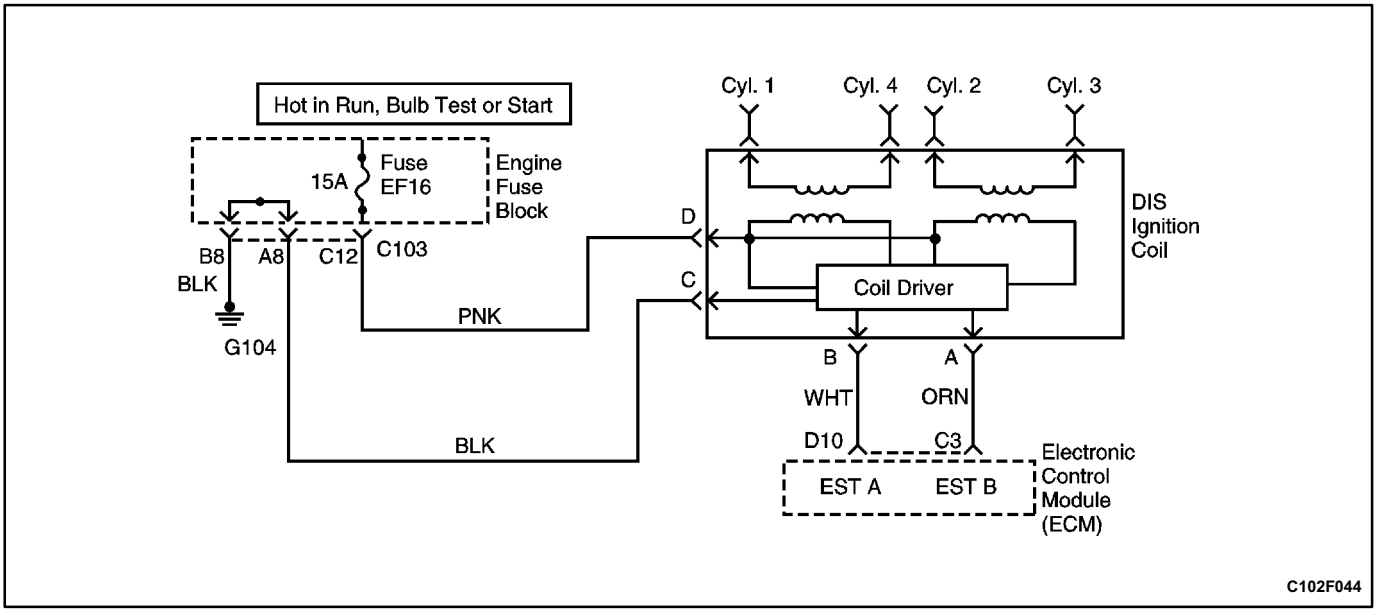

DIAGNOSTIC TROUBLE CODE (DTC) 41 ELECTRONIC SPARK TIMING "B" SHORTED TO BATTERY (2.0L SOHC)

Circuit Description

The direct ignition system (DIS) ignition coil is supplied with battery voltage when the ignition is ON. The electronic control module (ECM) triggers the circuit for the DIS ignition coil. Voltage is then induced in the secondary portion of the DIS ignition coil. Control of the DIS ignition coil is monitored separately for the two electronic spark timing lines.

DTC 41 Will Set When

- The electronic control module (ECM) receives voltage greater than 12 volts through the electronic spark timing (EST) "B" line while reference pulses are received by the ECM from the crankshaft position sensor.
- This error occurs more than 6 times.

Diagnostic Aids

- Inspect the electronic control module (ECM) harness connectors for backed-out terminals, improperly formed or damaged terminals, a poor terminal-to-wire connection, and a damaged wiring harness.
- If the connections and the harness are OK, connect a digital voltmeter or an oscilloscope between the affected terminal and ground while moving the related connectors and the wiring harness. If the fault is induced, the voltage reading or the scope pattern will change.

Test Description

The number(s) below refer to step(s) on the diagnostic table.

3. This step checks both the electronic spark timing (EST) "B" and the ground from the electronic control module (ECM).
6. A short to voltage that is intermittent may be at fault in the EST "B" wire from the ECM.
11. If there are not any problems in the wiring of the circuit, yet no output from the ECM, the ECM is faulty.

DTC 41 - Electronic Spark Timing B" Shorted to Battery (2.0L SOHC)

Step	Action	Value(s)	Yes	No
1	Was the Diagnostic System Check performed?	-	Go to *Step 2*	Go to Diagnostic System Check"
2	1. Disconnect the direct ignition system (DIS) ignition coil connector. 2. Check the DIS ignition coil connector terminals to ensure that the terminals are correctly installed and none of them are touching. Is the problem found?	-	Go to *Step 9*	Go to *Step 3*
3	1. Measure the voltage between terminal A and terminal C of the DIS ignition coil connector. 2. Crank the engine. Does the voltage fluctuate within the value specified?	0.2-2.0 V	Go to *Step 10*	Go to *Step 4*
4	1. Turn the ignition OFF. 2. Disconnect the electronic control module (ECM) white connector. 3. Check for any damaged pins or terminals at the ECM connector terminal C3 or near terminal C3. Is the problem found?	-	Go to *Step 9*	Go to *Step 5*
5	1. Turn the ignition ON. 2. Measure the voltage at the DIS ignition coil connector terminal A. Is any voltage present?	-	Go to *Step 7*	Go to *Step 6*
6	Measure the voltage at the DIS ignition coil connector terminal A while moving the connectors and the wiring harness of the ignition circuit. Is any voltage present?	-	Go to *Step 7*	Go to *Step 8*
7	1. Turn the ignition OFF. 2. Repair the short to voltage between the DIS ignition coil connector terminal A and the ECM connector terminal C3. 3. Clear any diagnostic trouble code(s) (DTCs) from the ECM. 4. Perform the Diagnostic System Check. Is the repair complete?	-	System OK	-
8	1. Turn the ignition OFF. 2. Check the wires and harnesses of the ignition circuit for any damage that could cause an intermittent short to voltage. Is the problem found?	-	Go to *Step 9*	Go to *Step 11*
9	1. Repair any wire or connector terminal as needed. 2. Clear any DTCs from the ECM. 3. Perform the Diagnostic System Check. Is the repair complete?	-	System OK	-
10	1. Turn the ignition OFF. 2. Replace the direct ignition system ignition coil assembly. 3. Clear any DTCs from the ECM. 4. Perform the Diagnostic System Check. Is the repair complete?	-	System OK	-
11	1. Replace the ECM. 2. Perform the Diagnostic System Check. Is the repair complete?	-	System OK	-

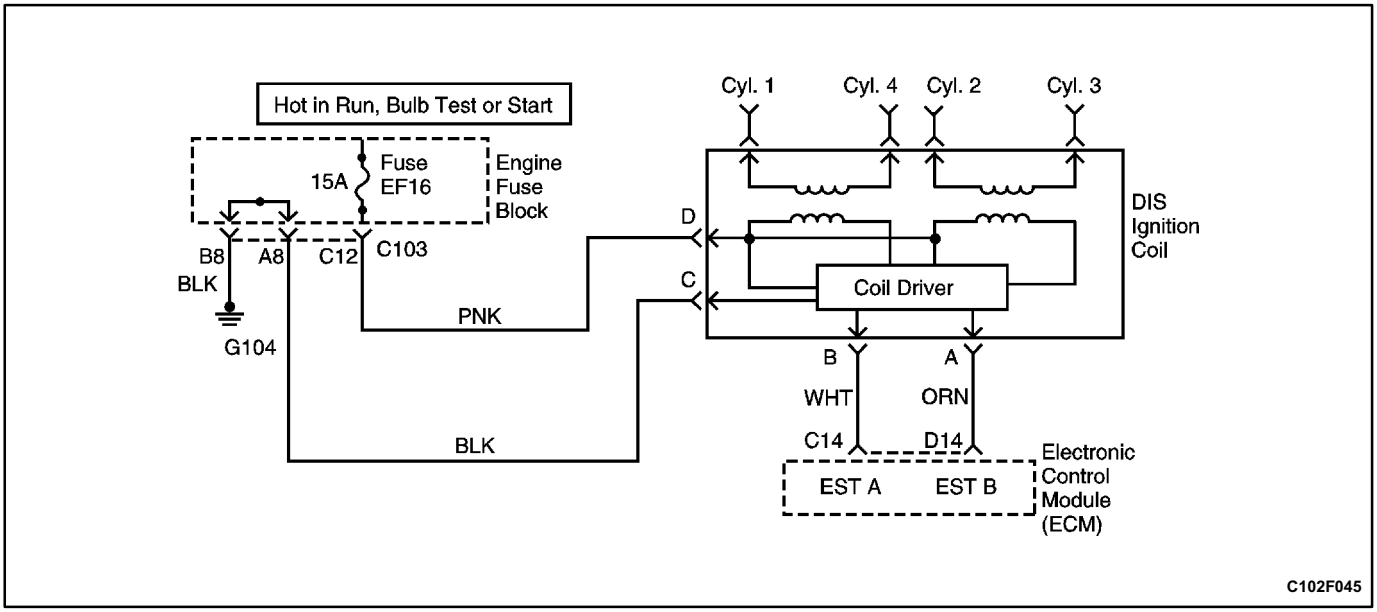

DIAGNOSTIC TROUBLE CODE (DTC) 41 ELECTRONIC SPARK TIMING "B" SHORTED TO BATTERY (2.0L DOHC)

Circuit Description

The direct ignition system (DIS) ignition coil is supplied with battery voltage when the ignition is ON. The electronic control module (ECM) triggers the circuit for the DIS ignition coil. Voltage is then induced in the secondary portion of the DIS ignition coil. Control of the DIS ignition coil is monitored separately for the two electronic spark timing lines.

DTC 41 Will Set When

- The electronic control module (ECM) receives voltage greater than 12 volts through the electronic spark timing (EST) "B" line while reference pulses are received by the ECM from the crankshaft position sensor.
- This error occurs over 6 times.

Diagnostic Aids

- Inspect the electronic control module (ECM) harness connectors for backed-out terminals, improperly formed or damaged terminals, a poor terminal-to-wire connection, and a damaged wiring harness.
- If the connections and the harness are OK, connect a digital voltmeter or an oscilloscope between the affected terminal and ground while moving the related connectors and the wiring harness. If the fault is induced, the voltage reading or the scope pattern will change.

Test Description

The number(s) below refer to step(s) on the diagnostic table.

3. This step checks both the electronic spark timing (EST) "B" and the ground from the electronic control module (ECM).
6. A short to voltage that is intermittent may be at fault in the EST "B" wire from the ECM.
11. If there are not any problems in the wiring of the circuit, yet no output from the ECM, the ECM is faulty.

DTC 41 - Electronic Spark Timing "B" Shorted to Battery (2.0L DOHC)

Step	Action	Value(s)	Yes	No
1	Was the Diagnostic System Check performed?	-	Go to *Step 2*	Go to "Diagnostic System Check"
2	1. Disconnect the direct ignition system (DIS) ignition coil connector. 2. Check the DIS ignition coil connector terminals to ensure that the terminals are correctly installed and none of them are touching. Is the problem found?	-	Go to *Step 9*	Go to *Step 3*
3	1. Measure the voltage between terminal A and terminal C of the DIS ignition coil connector. 2. Crank the engine. Does the voltage fluctuate within the value specified?	0.2-2.0 V	Go to *Step 10*	Go to *Step 4*
4	1. Turn the ignition OFF. 2. Disconnect the electronic control module (ECM) white connector. 3. Check for any damaged pins or terminals at the ECM connector terminal D14 or near terminal D14. Is the problem found?	-	Go to *Step 9*	Go to *Step 5*
5	1. Turn the ignition ON. 2. Measure the voltage at the DIS ignition coil connector terminal A. Is any voltage present?	-	Go to *Step 7*	Go to *Step 6*
6	Measure the voltage at the DIS ignition coil connector terminal A while moving the connectors and the wiring harness of the ignition circuit. Is any voltage present?	-	Go to *Step 7*	Go to *Step 8*
7	1. Turn the ignition OFF. 2. Repair the short to voltage between the DIS ignition coil connector terminal A and the ECM connector terminal D14. 3. Clear any diagnostic trouble code(s) (DTCs) from the ECM. 4. Perform the Diagnostic System Check. Is the repair complete?	-	System OK	-
8	1. Turn the ignition OFF. 2. Check the wires and harnesses of the ignition circuit for any damage that could cause an intermittent short to voltage. Is the problem found?	-	Go to *Step 9*	Go to *Step 11*
9	1. Repair any wire or connector terminal as needed. 2. Clear any DTCs from the ECM. 3. Perform the Diagnostic System Check. Is the repair complete?	-	System OK	-
10	1. Turn the ignition OFF. 2. Replace the direct ignition system ignition coil assembly. 3. Clear any DTCs from the ECM. 4. Perform the Diagnostic System Check. Is the repair complete?	-	System OK	-
11	1. Replace the ECM. 2. Perform the Diagnostic System Check. Is the repair complete?	-	System OK	-

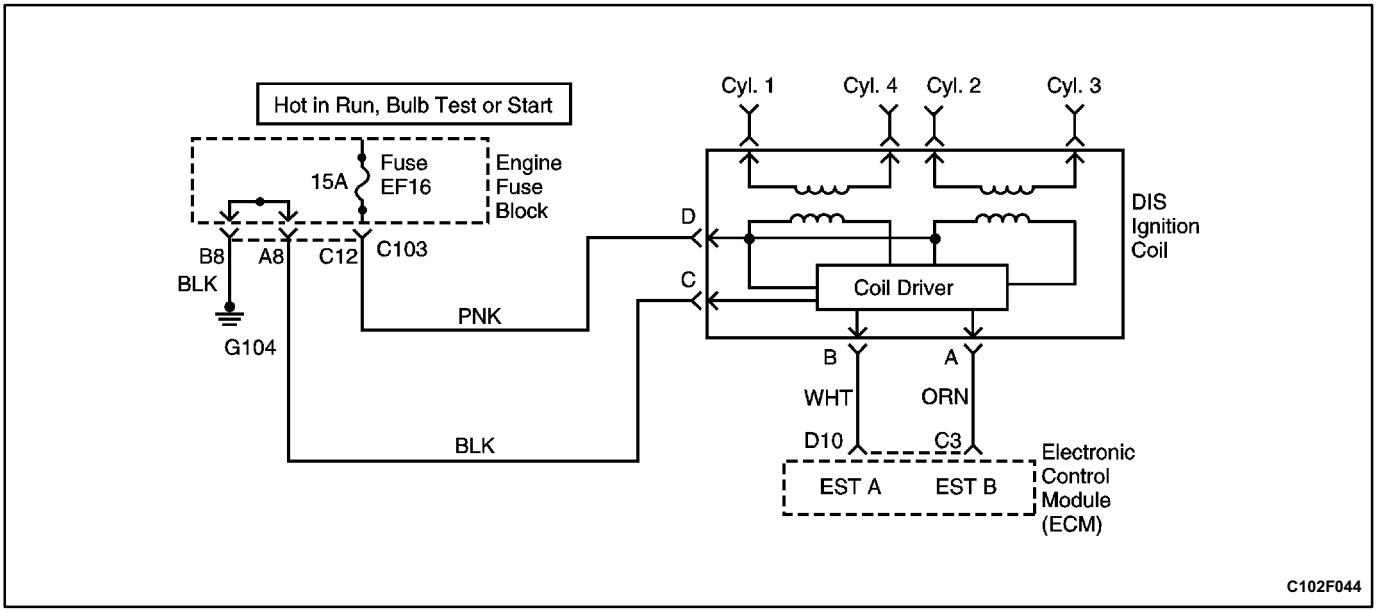

DIAGNOSTIC TROUBLE CODE (DTC) 42 ELECTRONIC SPARK TIMING "A" SHORTED TO BATTERY (2.0L SOHC)

Circuit Description

The direct ignition system (DIS) ignition coil is supplied with battery voltage when the ignition is ON. The electronic control module (ECM) triggers the circuit for the DIS ignition coil. Voltage is then induced in the secondary portion of the DIS ignition coil. Control of the DIS ignition coil is monitored separately for the two electronic spark timing lines.

DTC 42 Will Set When

- The electronic control module (ECM) receives voltage greater than 12 volts through the electronic spark timing (EST) "A" line while reference pulses are received by the ECM from the crankshaft position sensor.
- This error occurs more than 6 times.

Diagnostic Aids

- Inspect the electronic control module (ECM) harness connectors for backedout terminals, improperly formed or damaged terminals, a poor terminaltowire connection, and a damaged wiring harness.
- If the connections and the harness are OK, connect a digital voltmeter or an oscilloscope between the affected terminal and ground while moving the related connectors and the wiring harness. If the fault is induced, the voltage reading or the scope pattern will change.

Test Description

The number(s) below refer to step(s) on the diagnostic table.

3. This step checks both the electronic spark timing (EST) "A" and the ground from the electronic control module (ECM).
6. A short to voltage that is intermittent may be at fault in the EST "A" wire from the ECM.
11. If there are not any problems in the wiring of the circuit, yet no output from the ECM, the ECM is faulty.

DTC 42 - Electronic Spark Timing "A" Shorted to Battery (2.0L SOHC)

Step	Action	Value(s)	Yes	No
1	Was the Diagnostic System Check performed?	-	Go to *Step 2*	Go to "Diagnostic System Check"
2	1. Disconnect the direct ignition system (DIS) ignition coil connector. 2. Check the DIS ignition coil connector terminals to ensure that the terminals are correctly installed and none of them are touching. Is the problem found?	-	Go to *Step 9*	Go to *Step 3*
3	1. Measure the voltage between terminal B and terminal C of the DIS ignition coil connector. 2. Crank the engine. Does the voltage fluctuate within the values specified?	0.2-2.0 V	Go to *Step 10*	Go to *Step 4*
4	1. Turn the ignition OFF. 2. Disconnect the electronic control module (ECM) white connector. 3. Check for any damaged pins or terminals at the ECM connector terminal D10 or near terminal D10. Is the problem found?	-	Go to *Step 9*	Go to *Step 5*
5	1. Turn the ignition ON. 2. Measure the voltage at the DIS ignition coil connector terminal B. Is any voltage present?	-	Go to *Step 7*	Go to *Step 6*
6	Measure the voltage at the DIS ignition coil connector terminal B while moving the connectors and the wiring harness of the ignition circuit. Is any voltage present?	-	Go to *Step 7*	Go to *Step 8*
7	1. Turn the ignition OFF. 2. Repair the short to voltage between the DIS ignition coil connector terminal B and the ECM connector terminal D10. 3. Clear any diagnostic trouble code(s) (DTCs) from the ECM. 4. Perform the Diagnostic System Check. Is the repair complete?	-	System OK	-
8	1. Turn the ignition OFF. 2. Check the wires and the harnesses of the ignition circuit for any damage that could cause an intermittent short to voltage. Is the problem found?	-	Go to *Step 9*	Go to *Step 11*
9	1. Repair any wire or connector terminal as needed. 2. Clear any DTCs from the ECM. 3. Perform the Diagnostic System Check. Is the repair complete?	-	System OK	-
10	1. Turn the ignition OFF. 2. Replace the direct ignition system ignition coil assembly. 3. Clear any DTCs from the ECM. 4. Perform the Diagnostic System Check. Is the repair complete?	-	System OK	-
11	1. Replace the ECM. 2. Perform the Diagnostic System Check. Is the repair complete?	-	System OK	-

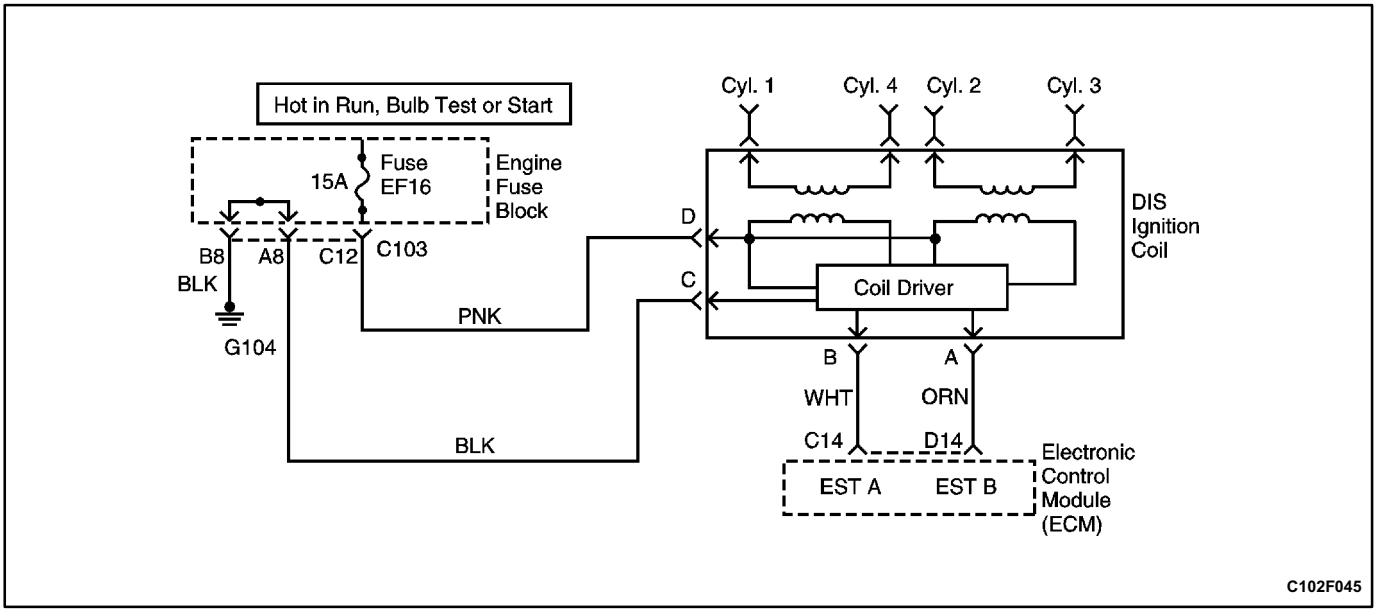

DIAGNOSTIC TROUBLE CODE (DTC) 42 ELECTRONIC SPARK TIMING "A" SHORTED TO BATTERY (2.0L DOHC)

Circuit Description

The direct ignition system (DIS) ignition coil is supplied with battery voltage when the ignition is ON. The electronic control module (ECM) triggers the circuit for the DIS ignition coil. Voltage is then induced in the secondary portion of the DIS ignition coil. Control of the DIS ignition coil is monitored separately for the two electronic spark timing lines.

DTC 42 Will Set When

- The electronic control module (ECM) receives voltage greater than 12 volts through the electronic spark timing (EST) "A" line while reference pulses are received by the ECM from the crankshaft position sensor.
- This error occurs over 6 times.

Diagnostic Aids

- Inspect the electronic control module (ECM) harness connectors for backed-out terminals, improperly formed or damaged terminals, a poor terminal-to-wire connection, and a damaged wiring harness.
- If the connections and the harness are OK, connect a digital voltmeter or an oscilloscope between the affected terminal and ground while moving the related connectors and the wiring harness. If the fault is induced, the voltage reading or the scope pattern will change.

Test Description

The number(s) below refer to step(s) on the diagnostic table.

3. This step checks both the electronic spark timing (EST) "A" and the ground from the electronic control module (ECM).
6. A short to voltage that is intermittent may be at fault in the EST "A" wire from the ECM.
11. If there are not any problems in the wiring of the circuit, yet no output from the ECM, the ECM is faulty.

DTC 42 - Electronic Spark Timing "A" Shorted to Battery (2.0L DOHC)

Step	Action	Value(s)	Yes	No
1	Was the Diagnostic System Check performed?	-	Go to *Step 2*	Go to "Diagnostic System Check"
2	1. Disconnect the direct ignition system (DIS) ignition coil connector. 2. Check the DIS ignition coil connector terminals to ensure that the terminals are correctly installed and none of them are touching. Is the problem found?	-	Go to *Step 9*	Go to *Step 3*
3	1. Measure the voltage between terminal B and terminal C of the DIS ignition coil connector. 2. Crank the engine. Does the voltage fluctuate within the values specified?	0.2-2.0 V	Go to *Step 10*	Go to *Step 4*
4	1. Turn the ignition OFF. 2. Disconnect the electronic control module (ECM) white connector. 3. Check for any damaged pins or terminals at the ECM connector terminal C14 or near terminal C14. Is the problem found?	-	Go to *Step 9*	Go to *Step 5*
5	1. Turn the ignition ON. 2. Measure the voltage at the DIS ignition coil connector terminal B. Is any voltage present?	-	Go to *Step 7*	Go to *Step 6*
6	Measure the voltage at the DIS ignition coil connector terminal B while moving the connectors and the wiring harness of the ignition circuit. Is any voltage present?	-	Go to *Step 7*	Go to *Step 8*
7	1. Turn the ignition OFF. 2. Repair the short to voltage between the DIS ignition coil connector terminal B and the ECM connector terminal C14. 3. Clear any diagnostic trouble code(s) (DTCs) from the ECM. 4. Perform the Diagnostic System Check. Is the repair complete?	-	System OK	-
8	1. Turn the ignition OFF. 2. Check the wires and the harnesses of the ignition circuit for any damage that could cause an intermittent short to voltage. Is the problem found?	-	Go to *Step 9*	Go to *Step 11*
9	1. Repair any wire or connector terminal as needed. 2. Clear any DTCs from the ECM. 3. Perform the Diagnostic System Check. Is the repair complete?	-	System OK	-
10	1. Turn the ignition OFF. 2. Replace the direct ignition system ignition coil assembly. 3. Clear any DTCs from the ECM. 4. Perform the Diagnostic System Check. Is the repair complete?	-	System OK	-
11	1. Replace the ECM. 2. Perform the Diagnostic System Check. Is the repair complete?	-	System OK	-

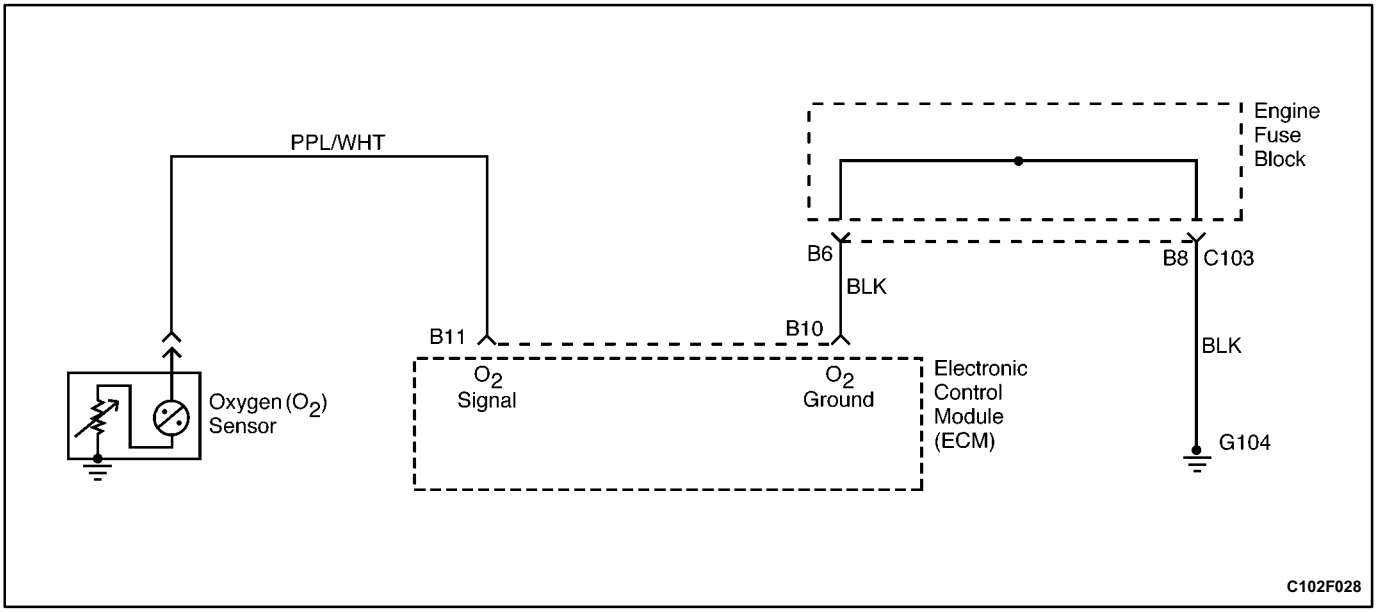

DIAGNOSTIC TROUBLE CODE (DTC) 44 OXYGEN SENSOR LEAN (2.0L SOHC)

Circuit Description

The electronic control module (ECM) supplies a voltage of about 450 millivolts between the ECM terminals B11 and B10. The oxygen (O_2) sensor varies the voltage within a range of about 1 volt if the exhaust is rich, down to about 100 millivolts if the exhaust is lean. The O_2 sensor is like an open circuit and produces no voltage when it is below 360°C (600°F). An open O_2 sensor circuit or a cold O_2 sensor causes open loop" operation.

DTC 44 Will Set When

- The engine has been running for at least 50 seconds.
- Diagnostic trouble code (DTC) 21 has not set.
- DTC 22 has not set.
- DTC 33 has not set.
- DTC 34 has not set.
- The throttle angle is above 5 percent.
- The coolant temperature is above 80°C (176°F).
- The engine controls system is in closed loop.
- The oxygen sensor voltage is below 200 millivolts.
- These conditions are present for 30 seconds.

Diagnostic Aids

- Normal scan tool voltage varies between 100 millivolts and 999 millivolts while in closed loop.
- Inspect the oxygen (O_2) sensor wire. The O_2 sensor pigtail may be positioned incorrectly and contacting the exhaust manifold.
- Check for an intermittent ground in the wire between the O_2 sensor and the electronic control module.
- Perform an injector balance test to determine if a restricted fuel injector may be causing the lean running condition.
- Vacuum or crankcase leaks will cause a lean running condition.
- An exhaust manifold gasket leak or a cracked exhaust manifold may cause outside air to be pulled into the exhaust and past the sensor.

Test Description

The number(s) below refer to step(s) on the diagnostic table.

2. Running the engine at 1,200 rpm keeps the oxygen (O_2) sensor hot so an accurate display voltage can be maintained.
4. If the O_2 sensor voltage stays fixed below 350 millivolts after disconnecting the O_2 sensor, there is either a short to ground in the O_2 sensor wire to the electronic control module (ECM) or a faulty ECM.

DTC 44 - Oxygen Sensor Lean (2.0L SOHC)

Step	Action	Value(s)	Yes	No
1	Was the Diagnostic System Check performed?	-	Go to *Step 2*	Go to "Diagnostic System Check"
2	1. Connect the scan tool to the assembly line diagnostic link (ALDL). 2. Run the engine until it reaches operating temperature. 3. Run the engine at 1,200 rpm. Does the scan tool read the oxygen (O_2) sensor voltage fixed below the value specified?	220 mV	Go to *Step 3*	Go to "Diagnostic Aids"
3	1. Disconnect the O_2 sensor connector. 2. Run the warm engine at idle. Does the scan tool read O_2 sensor voltage within the value specified?	350-550 mV	Go to "Diagnostic Aids"	Go to *Step 4*
4	1. Turn the ignition OFF. 2. Check the O_2 sensor signal wire between the O_2 sensor and electronic control module (ECM) connector terminal B11 for a short to ground. Is the problem found?	-	Go to *Step 5*	Go to *Step 6*
5	1. Repair the wire or the connector terminal as needed. 2. Clear any diagnostic trouble code(s) (DTCs) from the ECM. 3. Road test the vehicle. 4. Perform the Diagnostic System Check. Is the repair complete?	-	System OK	-
6	1. Replace the ECM. 2. Road test the vehicle. 3. Perform the Diagnostic System Check. Is the repair complete?	-	System OK	-

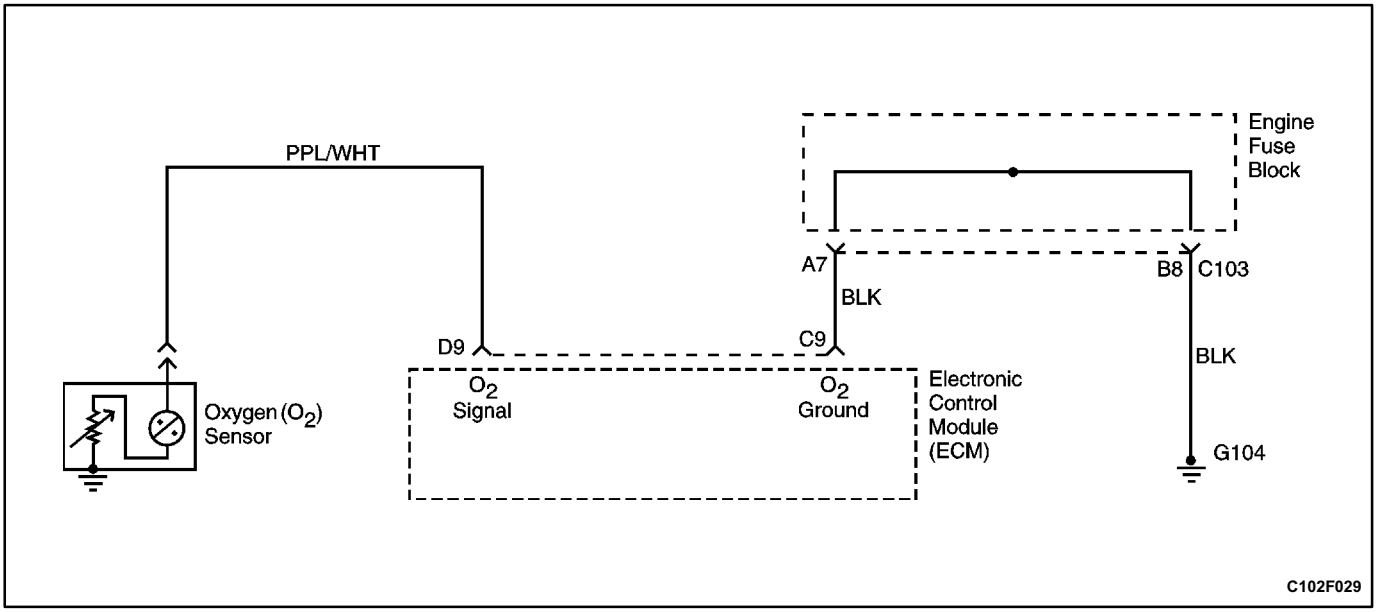

DIAGNOSTIC TROUBLE CODE (DTC) 44
OXYGEN SENSOR LEAN (2.0L DOHC)

Circuit Description

The electronic control module (ECM) supplies a voltage of about 450 millivolts between the ECM terminals D9 and C9. The oxygen (O_2) sensor varies the voltage within a range of about 1 volt if the exhaust is rich, down to about 100 millivolts if the exhaust is lean. The O_2 sensor is like an open circuit and produces no voltage when it is below 360°C (600°F). An open O_2 sensor circuit or a cold O_2 sensor causes open loop" operation.

DTC 44 Will Set When

- The engine controls system is in closed loop.
- The oxygen sensor voltage is below 274 millivolts.
- The engine has been running for at least 60 seconds.
- Diagnostic trouble code (DTC) 21 has not set.
- DTC 22 has not set.
- DTC 33 has not set.
- DTC 34 has not set.
- The throttle angle is above 5 percent.
- The coolant temperature is above 70°C (158°F).
- These conditions are present for at least 40 seconds.

Diagnostic Aids

- Normal scan tool voltage varies between 100 millivolts and 999 millivolts while in closed loop.
- Inspect the oxygen (O_2) sensor wire. The O_2 sensor pigtail may be positioned incorrectly and contacting the exhaust manifold.
- Check for an intermittent ground in the wire between the O_2 sensor and the electronic control module.
- Perform an injector balance test to determine if a restricted fuel injector may be causing the lean running condition.
- Vacuum or crankcase leaks will cause a lean running condition.
- An exhaust manifold gasket leak or a cracked exhaust manifold may cause outside air to be pulled into the exhaust and past the sensor.

Test Description

The number(s) below refer to step(s) on the diagnostic table.

2. Running the engine at 1,200 rpm keeps the oxygen (O_2) sensor hot so an accurate display voltage can be maintained.
4. If the O_2 sensor voltage stays fixed below 350 millivolts after disconnecting the O_2 sensor, there is either a short to ground in the O_2 sensor wire to the electronic control module (ECM) or a faulty ECM.

DTC 44 - Oxygen Sensor Lean (2.0L DOHC)

Step	Action	Value(s)	Yes	No
1	Was the Diagnostic System Check performed?	-	Go to *Step 2*	Go to "Diagnostic System Check"
2	1. Connect the scan tool to the assembly line diagnostic link (ALDL). 2. Run the engine until it reaches operating temperature. 3. Run the engine at 1,200 rpm. Does the scan tool read the oxygen (O_2) sensor voltage fixed below the value specified?	274 mV	Go to *Step 3*	Go to "Diagnostic Aids"
3	1. Disconnect the O_2 sensor connector. 2. Run the warm engine at idle. Does the scan tool read O_2 sensor voltage within the value specified?	350-550 mV	Go to "Diagnostic Aids"	Go to *Step 4*
4	1. Turn the ignition OFF. 2. Check the O_2 sensor signal wire between the O_2 sensor and electronic control module (ECM) connector terminal D9 for a short to ground. Is the problem found?	-	Go to *Step 5*	Go to *Step 6*
5	1. Repair the wire or the connector terminal as needed. 2. Clear any diagnostic trouble code(s) (DTCs) from the ECM. 3. Road test the vehicle. 4. Perform the Diagnostic System Check. Is the repair complete?	-	System OK	-
6	1. Replace the ECM. 2. Road test the vehicle. 3. Perform the Diagnostic System Check. Is the repair complete?	-	System OK	-

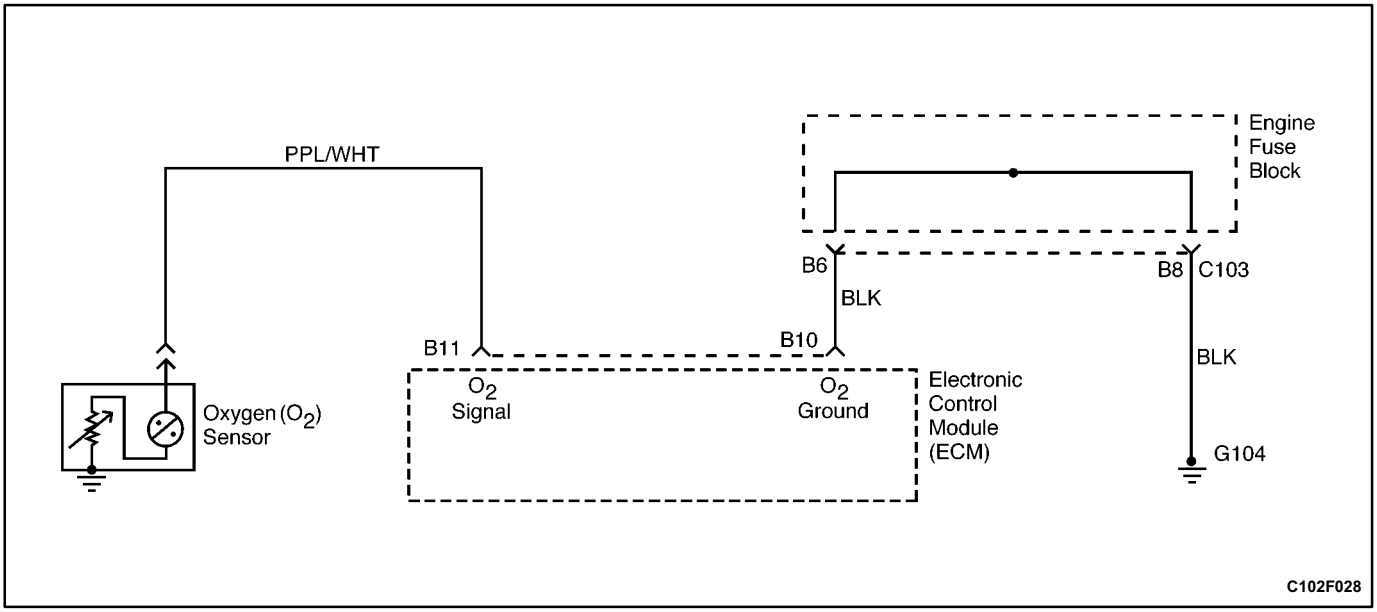

DIAGNOSTIC TROUBLE CODE (DTC) 45 OXYGEN SENSOR RICH (2.0L SOHC)

Circuit Description

The electronic control module (ECM) supplies a voltage of about 450 millivolts between the ECM terminals B11 and B10. The oxygen (O_2) sensor varies the voltage within a range of about 1 volt if the exhaust is rich, down to about 100 millivolts if the exhaust is lean. The O_2 sensor is like an open circuit and produces no voltage when it is below 360°C (600°F). An open O_2 sensor circuit or a cold O_2 sensor causes open loop" operation.

DTC 45 Will Set When

- The engine has been running for at least 50 seconds.
- Diagnostic trouble code (DTC) 21 has not set.
- The DTC 22 has not set.
- The DTC 33 has not set.
- The DTC 34 has not set.
- The throttle angle is above 5 percent.
- The coolant temperature is above 80°C (176°F).
- The engine controls system is in closed loop.
- The oxygen sensor voltage is above 800 millivolts.
- These conditions are present for at least 30 seconds.

Diagnostic Aids

- Normal scan tool voltage varies between 100 millivolts and 999 millivolts while in closed loop.
- Fuel pressure that is too high may cause a rich running condition.
- A leaking fuel pressure regulator diaphragm will cause a rich running condition.
- Check for leaking fuel injectors by performing a fuel injector balance test.
- An intermittent throttle position sensor output will cause a rich running condition due to a false indication of the engine accelerating.
- A false rich indication due to silicone contamination of the oxygen (O_2) sensor. This will be indicated by the presence of the diagnostic trouble code 45 accompanied by lean driveability conditions and a powdery white deposit on the O_2 sensor.

Test Description

The number(s) below refer to step(s) on the diagnostic table.

2. Running the engine at 1,200 rpm keeps the oxygen (O_2) sensor hot so an accurate display voltage can be maintained.
3. This step checks for the electronic control module ability to read a simulated lean O_2 sensor signal.

DTC 45 - Oxygen Sensor Rich (2.0L SOHC)

Step	Action	Value(s)	Yes	No
1	Was the Diagnostic System Check performed?	-	Go to *Step 2*	Go to "Diagnostic System Check"
2	1. Connect the scan tool to the assembly line diagnostic link (ALDL). 2. Run the engine until it reaches operating temperature. 3. Run the engine at 1,200 rpm. Does the scan tool read the oxygen (O_2) sensor voltage fixed above the value specified?	800 mV	Go to *Step 3*	Go to "Diagnostic Aids"
3	1. Disconnect the O_2 sensor connector and jumper the connector terminal to ground on the electronic control module (ECM) side. 2. Run the warm engine at idle. Does the scan tool read the O_2 sensor voltage below the value specified?	350 mV	Go to "Diagnostic Aids"	Go to *Step 4*
4	1. Turn the ignition OFF. 2. Replace the ECM. 3. Road test the vehicle. 4. Perform the Diagnostic System Check. Is the repair complete?	-	System OK	-

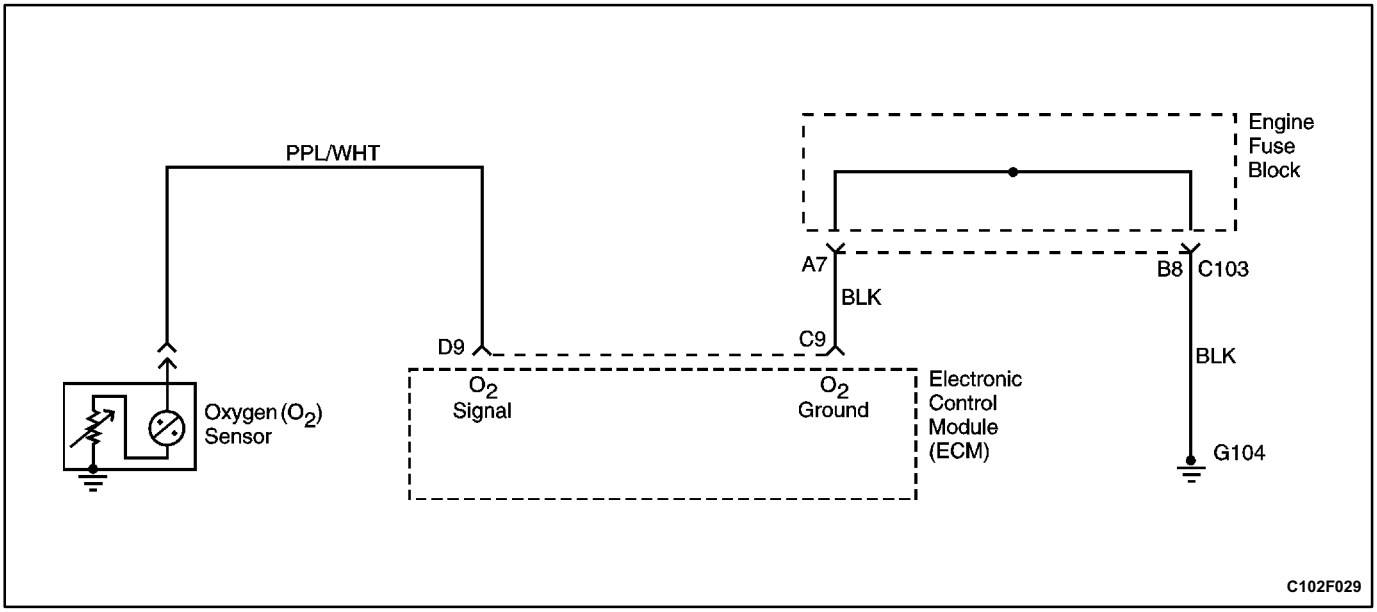

DIAGNOSTIC TROUBLE CODE (DTC) 45 OXYGEN SENSOR RICH (2.0L DOHC)

Circuit Description

The electronic control module (ECM) supplies a voltage of about 450 millivolts between the ECM terminals D9 and C9. The oxygen (O_2) sensor varies the voltage within a range of about 1 volt if the exhaust is rich, down to about 100 millivolts if the exhaust is lean. The O_2 sensor is like an open circuit and produces no voltage when it is below 360°C (600°F). An open O_2 sensor circuit or a cold O_2 sensor causes open loop" operation.

DTC 45 Will Set When

- The engine has been running for at least 60 seconds.
- Diagnostic trouble code (DTC) 21 has not set.
- DTC 22 has not set.
- DTC 33 has not set.
- DTC 34 has not set.
- The throttle angle is above 5 percent.
- The coolant temperature is above 70°C (158°F).
- The engine controls system is in closed loop.
- The oxygen sensor voltage is above 865 millivolts.
- These conditions are present for at least 10 seconds.

Diagnostic Aids

- Normal scan tool voltage varies between 100 millivolts and 999 millivolts while in closed loop.
- Fuel pressure that is too high may cause a rich running condition.
- A leaking fuel pressure regulator diaphragm will cause a rich running condition.
- Check for leaking fuel injectors by performing a fuel injector balance test.
- An intermittent throttle position sensor output will cause a rich running condition due to a false indication of the engine accelerating.
- A false rich indication due to silicone contamination of the oxygen (O_2) sensor. This will be indicated by the presence of the diagnostic trouble code 45 accompanied by lean driveability conditions and a powdery white deposit on the O_2 sensor.

Test Description

The number(s) below refer to step(s) on the diagnostic table.

2. Running the engine at 1,200 rpm keeps the oxygen (O_2) sensor hot so an accurate display voltage can be maintained.
3. This step checks for the electronic control module ability to read a simulated lean O_2 sensor signal.

DTC 45 - Oxygen Sensor Rich (2.0L DOHC)

Step	Action	Value(s)	Yes	No
1	Was the Diagnostic System Check performed?	-	Go to *Step 2*	Go to "Diagnostic System Check"
2	1. Connect the scan tool to the assembly line diagnostic link (ALDL). 2. Run the engine until it reaches operating temperature. 3. Run the engine at 1,200 rpm. Does the scan tool read the oxygen (O_2) sensor voltage fixed above the value specified?	800 mV	Go to *Step 3*	Go to "Diagnostic Aids"
3	1. Disconnect the O_2 sensor connector and jumper the connector terminal to ground on the electronic control module (ECM) side. 2. Run the warm engine at idle. Does the scan tool read the O_2 sensor voltage below the value specified?	350 mV	Go to "Diagnostic Aids"	Go to *Step 4*
4	1. Turn the ignition OFF. 2. Replace the ECM. 3. Road test the vehicle. 4. Perform the Diagnostic System Check. Is the repair complete?	-	System OK	-

DIAGNOSTIC TROUBLE CODE (DTC) 49
BATTERY VOLTAGE TOO HIGH (2.0L DOHC)

Circuit Description

The electronic control module (ECM) monitors the battery voltage at the ECM connector terminal C16. If the ECM detects voltage above the tolerance, the diagnostic trouble code (DTC) 49 will be set.

DTC 49 Will Set When

- The battery voltage is greater than 17.2 volts for more than 2 seconds.

Diagnostic Aids

- Charging the battery with a battery charger and starting the engine may set the diagnostic trouble code (DTC) 49.
- Inspect the electronic control module (ECM) wiring harness connectors for improper mating, broken locks, improperly formed or damaged terminals, poor terminal-to-wire connection, and a damaged harness.
- If the connections and the wiring harness check OK, monitor the battery voltage display on the scan tool while moving related connectors. If the fault is induced, the battery voltage will abruptly change. This may help to isolate the location of the problem.

Test Description

The number(s) below refer to step(s) on the diagnostic table.

3. If the scan tool is showing incorrect battery voltage, the electronic control module (ECM) is at fault.

DTC 49 - Battery Voltage Too High (2.0L DOHC)

Step	Action	Value(s)	Yes	No
1	Was the Diagnostic System Check performed?	-	Go to *Step 2*	Go to "Diagnostic System Check"
2	1. Connect the scan tool to the assembly line diagnostic link (ALDL). 2. Start the engine and raise the engine speed to 1,200 rpm. 3. Monitor the battery voltage on the scan tool. Is the voltage at or above the value specified?	17.2 V	Go to *Step 3*	Go to *Step 4*
3	Measure the voltage across the battery. Is the voltage at or above the value specified?	17.2 V	Go to *Step 5*	Go to *Step 6*
4	1. Turn the headlamps ON. 2. Turn the A/C ON. 3. Turn the blower switch to HIGH. 4. Raise the engine speed to 2,000 rpm. 5. Monitor the battery voltage on the scan tool. Is the voltage at or above the value specified?	17.2 V	Go to *Step 5*	Go to "Diagnostic Aids"
5	1. Turn the ignition OFF. 2. Repair the generator or generator circuit as needed. 3. Clear any diagnostic trouble code(s) (DTCs) from the electronic control module (ECM). 4. Perform the Diagnostic System Check. Is the repair complete?	-	System OK	-
6	1. Turn the ignition OFF. 2. Replace the ECM. 3. Perform the Diagnostic System Check. Is the repair complete?	-	System OK	-

DIAGNOSTIC TROUBLE CODE (DTC) 51 CHECKSUM OR KKPGMID ERROR (2.0L SOHC AND 2.0L DOHC)

DTC Will Set When

- KKPGMID is not set into A7 for SOHC or the calculated CHECKSUM is not consistent with the KKSUM.

Test Description

The number(s) below refer to step(s) on the diagnostic table.

2. A PROM that is incorrectly installed will set the diagnostic trouble code (DTC) 51.

DTC 51 - CHECKSUM or KKPGMID Error (2.0L SOHC and 2.0L DOHC)

Step	Action	Value(s)	Yes	No
1	Was the Diagnostic System Check performed?	-	Go to *Step 2*	Go to "Diagnostic System Check"
2	Check that all of the programmable read-only memory (PROM) pins are fully inserted in the socket. Is the problem found?	-	Go to *Step 3*	Go to *Step 4*
3	1. Install the PROM correctly in the socket. 2. Clear any diagnostic trouble code(s) (DTCs) from the electronic control module (ECM). 3. Check for the presence of any DTCs. Did the DTC 51 reappear?	-	Go to *Step 4*	Go to "Diagnostic System Check"
4	1. Replace the PROM. 2. Clear any DTCs from the ECM. 3. Check for the presence of any DTCs. Did the DTC 51 reappear?	-	Go to *Step 5*	Go to "Diagnostic System Check"
5	1. Replace the ECM. 2. Clear any DTCs from the ECM. 3. Perform the Diagnostic System Check. Is the repair complete?	-	System OK	-

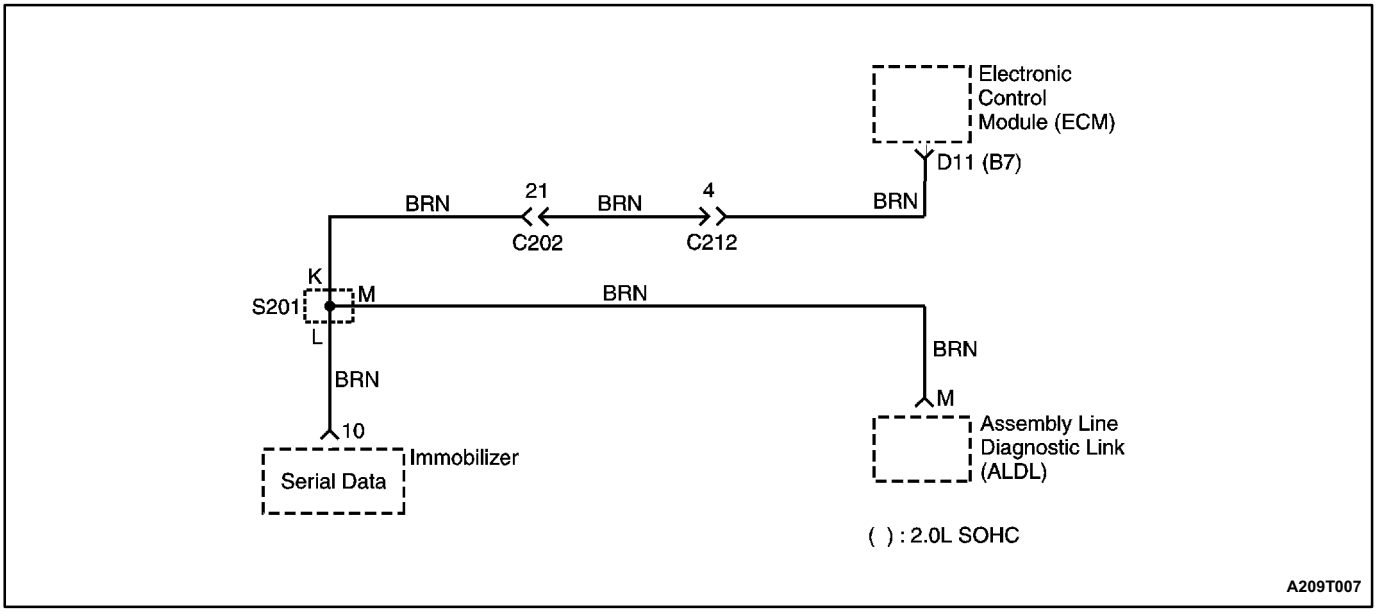

DIAGNOSTIC TROUBLE CODE (DTC) 53
ECM IMMOBILIZER ERROR (2.0L SOHC AND 2.0L DOHC)

Circuit Description

When the ignition is turned ON, the key is tested by the immobilizer anti-theft system. While the key code is being read by the immobilizer control unit, the engine can start and run with any key that will turn the lock cylinder. The key code is read and compared with key codes that have been stored in the memory of the immobilizer control unit. If a valid key is detected, the immobilizer control unit sends a serial data release message to the electronic control module (ECM). Included in the release message is an identification (ID) code which assures that neither the immobilizer control unit nor the ECM have been substituted to defeat the system. If the ECM receives an invalid release message, the ECM performs the following actions:

- Disables the fuel injector circuit.
- Disables the fuel pump circuit.
- Disables the ignition coil.

DTC 53 Will Set When

- The ECM does not receive the signal from the immobilizer control module within 0.9 seconds when the vehicle is stationary, or within 1.8 seconds when the vehicle is moving.
- The ECM receives an incorrect release message from the immobilizer control unit more than five times.

The above conditions will be maintained until the ignition is switched OFF.

DTC 53 Will Clear When

The ignition switch is turned OFF, or the scan tool CLEAR CODES command is issued.

DTC 53 - ECM Immobilizer Error (2.0L SOHC and 2.0L DOHC)

Step	Action	Value(s)	Yes	No
1	Connect the scan tool using the following procedure: 1. Insert the immobilizer data cartridge into the scan tool. 2. Turn the ignition switch OFF. 3. Connect the scan tool to the assembly line diagnostic link (ALDL). 4. Connect the scan tool's power cord to the cigar lighter socket. 5. Turn the ignition ON, but do not start the engine. Is communication established between the scan tool and the immobilizer control unit?	-	Go to *Step 2*	Go to "Communication Between Immobilizer and Test Equipment"
2	Select SYSTEM DIAGNOSIS from the scan tool menu. Does the KEY STATUS message indicate POS NR (position number) 00?	-	Go to "Key Status Errors"	Go to *Step 3*
3	1. Select SYSTEM DIAGNOSIS from the scan tool menu. 2. Read the IMMO & ECM ID CODE message. Does the message ID CODE DIFFERENT appear?	-	Go to "Identification (ID) Code Reprogramming"	Go to *Step 4*
4	Check for an open serial data wire between the immobilizer control unit and the electronic control module (ECM). Is the circuit open?	-	Go to *Step 5*	Go to *Step 6*
5	Repair the open serial data wire between the ECM and the immobilizer control unit. Is the repair complete?	-	System OK	-
6	1. Replace the ECM. 2. Reprogram the identification (ID)code. Refer to *Section 9T, Immobilizer Anti-Theft System.* Is the repair complete?	-	System OK	-

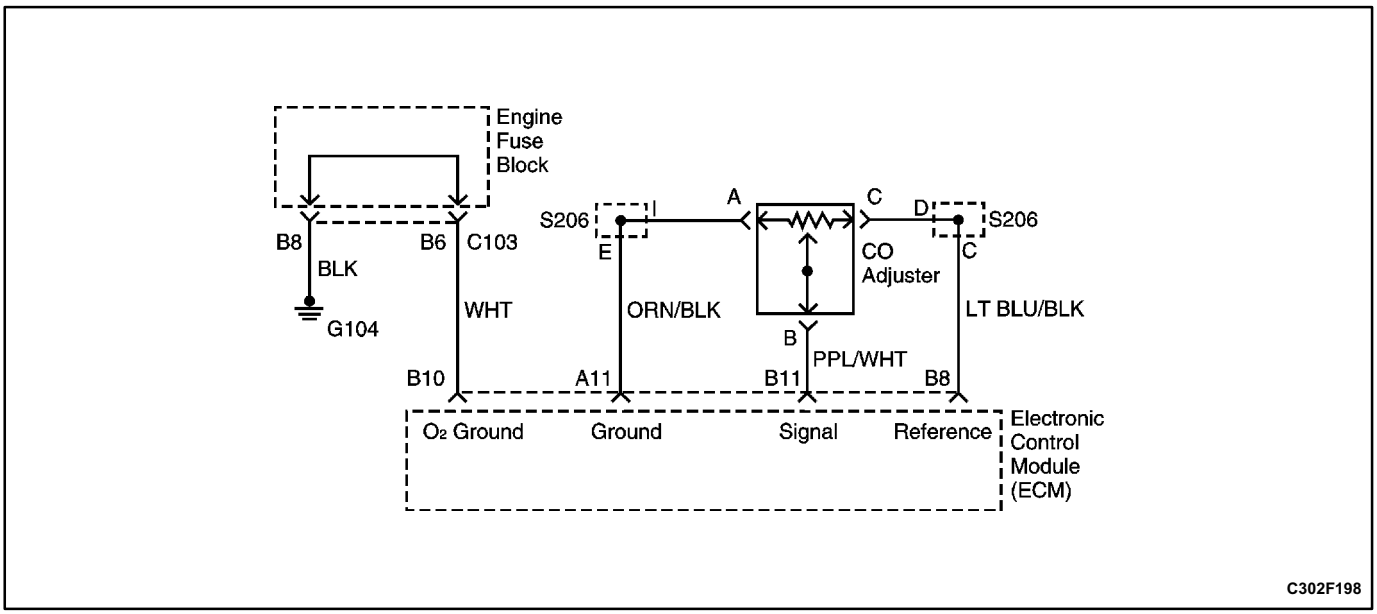

DIAGNOSTIC TROUBLE CODE (DTC) 54
CO ADJUST ERROR (2.0L SOHC - LEADED FUEL ONLY)

Circuit Description

The CO adjuster is only used on vehicles that use leaded fuel. The CO adjuster is used in place of the O_2 sensor.

DTC 54 Will Set When

- The engine control system is in open loop.
- CO potentiometer high limit > 254 counts or CO potentiometer low limit < 4.9 counts.

Diagnostic Aids

- Inspect the electronic control module (ECM) wiring harness connectors for improper mating, broken locks, improperly formed or damaged terminals, a poor terminal-to-wire connection, and a damaged harness.

DTC 54 - CO Adjust Error (2.0L SOHC - Leaded Fuel Only)

Step	Action	Value(s)	Yes	No
1	Determine whether the Diagnostic System Check has been performed. Was the Diagnostic System Check performed?	-	Go to *Step 2*	Go to "Diagnostic System Check"
2	Adjust the CO adjuster. Is the CO adjustable and in proper adjustment?	-	System OK	Go to *Step 3*
3	1. To check the ability of the electronic control module (ECM) to provide a 5 volt supply to the CO adjuster, begin by turning the ignition OFF. 2. Disconnect the electrical connector at the CO adjuster. 3. Turn the ignition ON. 4. Measure the voltage between the CO adjuster terminal A and ground. Does the voltage measure within the value specified?	4.5-5.5 V	Go to *Step 7*	Go to *Step 4*
4	1. Turn the ignition OFF. 2. Check for a short to battery voltage, a short to ground, or an open in the wire between the CO adjuster terminal A and the ECM connector terminal B8. Is the problem found?	-	Go to *Step 8*	Go to *Step 7*

DTC 54 - CO Adjust Error (2.0L SOHC - Leaded Fuel Only) (Cont'd)

Step	Action	Value(s)	Yes	No
5	1. Replace the ECM. 2. Perform the Diagnostic System Check. Is the repair complete?	-	System OK	-
6	Check for a short to battery voltage, a short to ground, or an open in the wire between the CO adjuster terminal C and the ECM connector terminal B11. Is the problem found?	-	Go to *Step 8*	Go to *Step 9*
7	Check for a short to battery voltage, a short to ground, or an open in the wire between the CO adjuster terminal B and the ECM connector terminal A11. Is the problem found?	-	Go to *Step 8*	Go to *Step 6*
8	1. Repair the wire or the connector terminal, as needed. 2. Clear any diagnostic trouble codes (DTCs) from the ECM. 3. Perform the Diagnostic System Check. Is the repair complete?	-	System OK	-
9	1. Disconnect the electrical connector at the CO adjuster. 2. Measure the resistance between terminal A and terminal B of the CO adjuster. Is the resistance the value specified?	12.6 Ω	Go to *Step 10*	Go to *Step 11*
10	To check the ability of the CO adjuster to vary the resistance in the circuit, measure the resistance between terminal A and terminal C of the CO adjuster. Does the resistance vary with the turn of the adjuster screw?	-	Go to *Step 12*	Go to *Step 11*
11	1. Replace the CO adjuster. 2. Clear any DTCs from the ECM. 3. Perform the Diagnostic System Check. Is the repair complete?	-	System OK	-
12	Check for an open or a short to battery voltage between terminal B10 of the ECM and ground. Is the problem found?	-	Go to *Step 8*	Go to *Step 5*

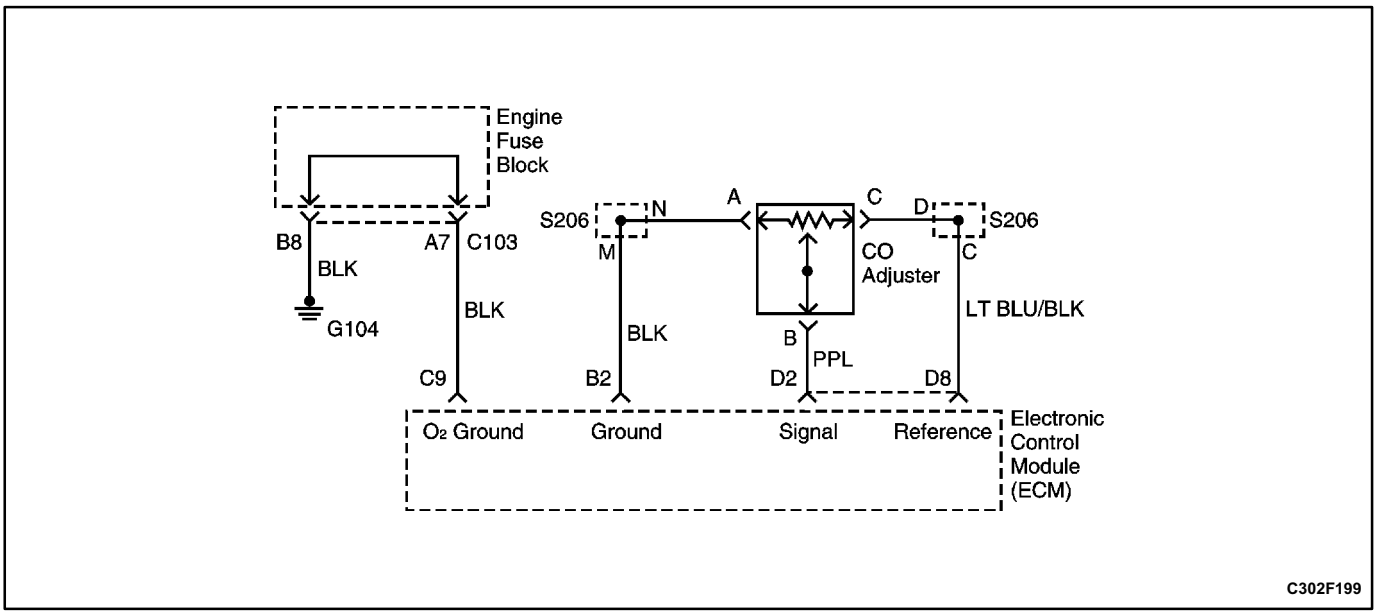

DIAGNOSTIC TROUBLE CODE (DTC) 54
CO ADJUST ERROR (2.0L DOHC - LEADED FUEL ONLY)

Circuit Description

The CO adjuster is only used on vehicles that use leaded fuel. The CO adjuster is used in place of the O_2 sensor.

DTC 54 Will Set When

- The engine control system is in open loop.
- CO potentiometer > 250 counts or CO potentiometer < 5 counts.

Diagnostic Aids

- Inspect the electronic control module (ECM) wiring harness connectors for improper mating, broken locks, improperly formed or damaged terminals, a poor terminal-to-wire connection, and a damaged harness.

DTC 54 - CO Adjust Error (2.0L DOHC - Leaded Fuel Only)

Step	Action	Value(s)	Yes	No
1	Determine whether the Diagnostic System Check has been performed. Was the Diagnostic System Check performed?	-	Go to *Step 2*	Go to "Diagnostic System Check"
2	Adjust the CO adjuster. Is the CO adjustable and in proper adjustment?	-	System OK	Go to *Step 3*
3	1. To check the ability of the electronic control module (ECM) to provide a 5 volt supply to the CO adjuster, begin by turning the ignition OFF. 2. Disconnect the electrical connector at the CO adjuster. 3. Turn the ignition ON. 4. Measure the voltage between the CO adjuster terminal A and ground. Does the voltage measure within the value specified?	4.5-5.5 V	Go to *Step 7*	Go to *Step 4*
4	1. Turn the ignition OFF. 2. Check for a short to battery voltage, a short to ground, or an open in the wire between the CO adjuster terminal A and the ECM connector terminal D8. Is the problem found?	-	Go to *Step 8*	Go to *Step 7*

DTC 54 - CO Adjust Error (2.0L DOHC - Leaded Fuel Only) (Cont'd)

Step	Action	Value(s)	Yes	No
5	1. Replace the ECM. 2. Perform the Diagnostic System Check. Is the repair complete?	-	System OK	-
6	Check for a short to battery voltage, a short to ground, or an open in the wire between the CO adjuster terminal C and the ECM connector terminal D2. Is the problem found?	-	Go to *Step 8*	Go to *Step 9*
7	Check for a short to battery voltage, a short to ground, or an open in the wire between the CO adjuster terminal B and the ECM connector terminal B2. Is the problem found?	-	Go to *Step 8*	Go to *Step 6*
8	1. Repair the wire or the connector terminal, as needed. 2. Clear any diagnostic trouble codes (DTCs) from the ECM. 3. Perform the Diagnostic System Check. Is the repair complete?	-	System OK	-
9	1. Disconnect the electrical connector at the CO adjuster. 2. Measure the resistance between terminal A and terminal B of the CO adjuster. Is the resistance the value specified?	12.6 Ω	Go to *Step 10*	Go to *Step 11*
10	To check the ability of the CO adjuster to vary the resistance in the circuit, measure the resistance between terminal A and terminal C of the CO adjuster. Does the resistance vary with the turn of the adjuster screw?	-	Go to *Step 12*	Go to *Step 11*
11	1. Replace the CO adjuster. 2. Clear any DTCs from the ECM. 3. Perform the Diagnostic System Check. Is the repair complete?	-	System OK	-
12	Check for an open or a short to battery voltage between terminal C9 of the ECM and ground. Is the problem found?	-	Go to *Step 8*	Go to *Step 5*

DIAGNOSTIC TROUBLE CODE (DTC) 55
EEPROM OR CONFIG REG ERROR (2.0L DOHC)

Circuit Description

The electronic control module (ECM) utilizes an electronically erasable programmable read only memory (EEPROM). The EEPROM contains program information and the calibrations required for engine diagnostics operation.

DTC 55 Will Set When

- Microprocessor configuration register is not equal to $OB.

Diagnostic Aids

The diagnostic trouble code (DTC) 55 indicates that the contents of the electronically erasable programmable read only memory (EEPROM) have changed since the electronic control module (ECM) was programmed. The only possible repair is ECM replacement. Remember to program the replacement ECM with the correct software and calibration for the vehicle.

Test Description

The number(s) below refer to step(s) on the diagnostic table.

2. When the electronic control module (ECM) is being replaced, the new ECM must be programmed.

DTC 55 - EEPROM or Config Reg Error (2.0L DOHC)

Step	Action	Value(s)	Yes	No
1	Determine whether the Diagnostic System Check has been performed. Was the Diagnostic System Check performed?	-	Go to *Step 2*	Go to "Diagnostic System Check"
2	1. Replace the electronic control module. 2. Perform the Diagnostic System Check. Is the repair complete?	-	System OK	-

BLANK

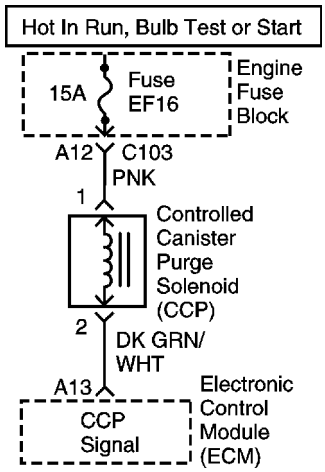

C102F049

DIAGNOSTIC TROUBLE CODE (DTC) 61 CONTROLLED CANISTER PURGE SOLENOID SHORTED TO GROUND (2.0L DOHC)

Circuit Description

Evaporative canister purge is controlled by the electronic control module (ECM). The ECM applies a ground to the controlled canister purge (CCP) solenoid. The ECM determines when to activate the CCP solenoid depending on operating conditions, including throttle position, engine speed, coolant temperature, and ambient temperature.

DTC 61 Will Set When

- A short to ground condition exists and is present for more than 2 seconds.

Diagnostic Aids

- Inspect the electronic control module (ECM) wiring harness connectors for improper mating, broken locks, improperly formed or damaged terminals, a poor terminal-to-wire connection, and a damaged harness.
- If the connections and the wiring harness are in good condition, connect a test light between the CCP solenoid connector terminal 2 and battery positive while moving related connectors. If the fault is induced, the test light will turn on. This may help to isolate the location of an intermittent problem.

Test Description

The number(s) below refer to step(s) on the diagnostic table.

2. With the ignition OFF, the electronic control module (ECM) should not be applying ground to the CCP solenoid.
3. If the test light is still on after disconnecting the ECM red connector, the wire between the CCP solenoid and the ECM is shorted to ground. If the test light goes off, the ECM is at fault.

DTC 61 - Controlled Canister Purge Solenoid Shorted to Ground (2.0L DOHC)

Step	Action	Value(s)	Yes	No
1	Determine whether the Diagnostic System Check has been performed. Was the Diagnostic System Check performed?	-	Go to *Step 2*	Go to "Diagnostic System Check"
2	1. Disconnect the controlled canister purge (CCP) solenoid connector. 2. Connect a test light between the CCP solenoid connector terminal 2 and battery positive. Is the test light on?	-	Go to *Step 3*	Go to "Diagnostic Aids"
3	Disconnect the electronic control module (ECM) red connector. Is the test light on?	-	Go to *Step 4*	Go to *Step 5*
4	1. Repair the short to ground in the wire between the CCP solenoid connector terminal 2 and the ECM connector terminal A13. 2. Clear any diagnostic trouble codes (DTCs) from the ECM. 3. Perform the Diagnostic System Check. Is the repair complete?	-	System OK	-
5	1. Replace the electronic control module. 2. Perform the Diagnostic System Check. Is the repair complete?	-	System OK	-

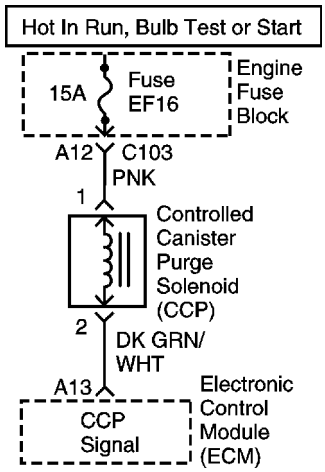

C102F049

DIAGNOSTIC TROUBLE CODE (DTC) 62 CONTROLLED CANISTER PURGE SOLENOID SHORTED TO BATTERY (2.0L DOHC)

Circuit Description

Evaporative canister purge is controlled by the electronic control module (ECM). The ECM applies a ground to the controlled canister purge (CCP) solenoid. The ECM determines when to activate the CCP solenoid depending on operating conditions, including throttle position, engine speed, coolant temperature, and ambient temperature.

DTC 62 Will Set When

- A short to battery voltage condition exists and is present for more than 2 seconds.

Diagnostic Aids

- Inspect the electronic control module (ECM) wiring harness connectors for improper mating, broken locks, improperly formed or damaged terminals, a poor terminal-to-wire connection, and a damaged harness.
- If the connections and the wiring harness are in good condition, connect a test light between the CCP solenoid connector terminal 2 and battery positive while moving related connectors. If the fault is induced, the test light will turn on. This may help to isolate the location of an intermittent problem.

Test Description

The number(s) below refer to step(s) on the diagnostic table.

4. If the test light is still on after disconnecting the ECM red connector, the wire between the CCP solenoid and the ECM is shorted to voltage. If the test light goes off, the ECM is at fault.

DTC 62 - Controlled Canister Purge Solenoid Shorted to Battery (2.0L DOHC)

Step	Action	Value(s)	Yes	No
1	Determine whether the Diagnostic System Check has been performed. Was the Diagnostic System Check performed?	-	Go to *Step 2*	Go to "Diagnostic System Check"
2	1. Disconnect the controlled canister purge (CCP) solenoid connector. 2. Measure the resistance of the CCP solenoid. Does the resistance measure near the value specified?	≈ 0 Ω	Go to *Step 6*	Go to *Step 3*
3	1. Disconnect the CCP solenoid connector. 2. Connect a test light between the CCP solenoid connector terminal 2 and ground. Is the test light on?	-	Go to *Step 4*	Go to "Diagnostic Aids"
4	Disconnect the electronic control module (ECM) red connector. Is the test light on?	-	Go to *Step 5*	Go to *Step 7*
5	1. Repair the short to voltage in the wire between the CCP solenoid connector terminal 2 and the ECM connector terminal A13. 2. Clear any diagnostic trouble codes (DTCs) from the ECM. 3. Perform the Diagnostic System Check. Is the repair complete?	-	System OK	-
6	1. Replace the CCP solenoid. 2. Clear any DTCs from the ECM. 3. Perform the Diagnostic System Check. Is the repair complete?	-	System OK	-
7	1. Replace the electronic control module. 2. Perform the Diagnostic System Check. Is the repair complete?	-	System OK	-

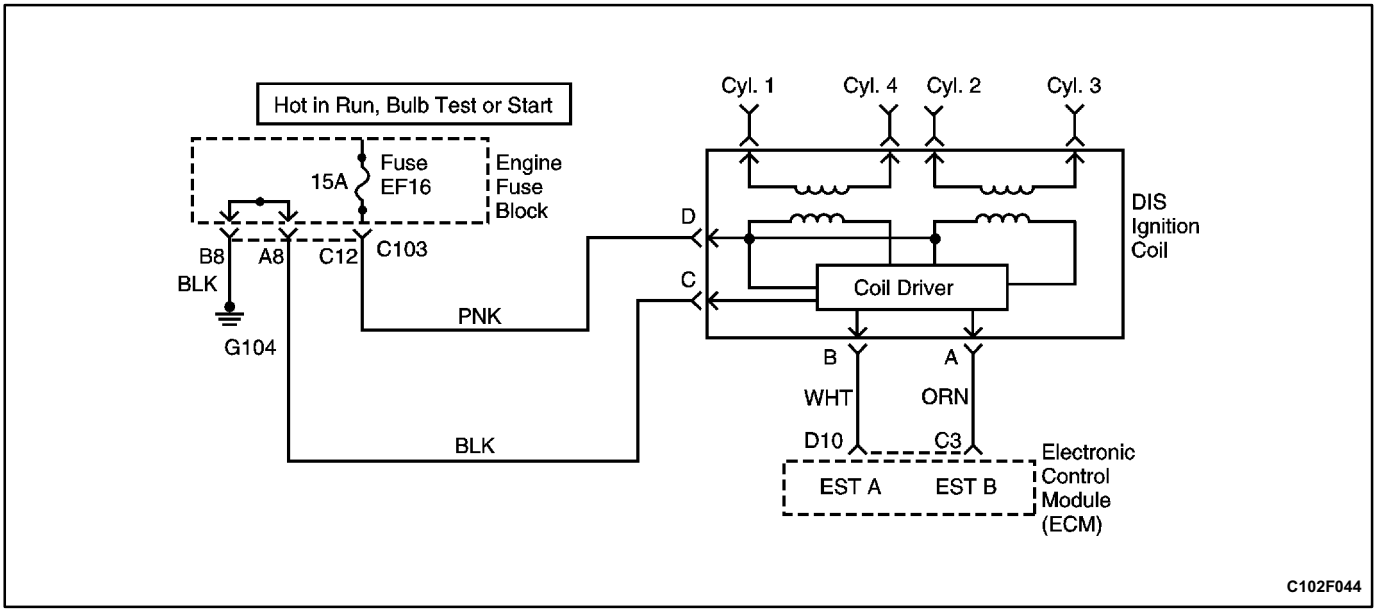

DIAGNOSTIC TROUBLE CODE (DTC) 63 ELECTRONIC SPARK TIMING "B" SHORTED TO GROUND (2.0L SOHC)

Circuit Description

The direct ignition system (DIS) ignition coil is supplied with battery voltage when the ignition is ON. The electronic control module (ECM) triggers the circuit for the DIS ignition coil. Voltage is then induced in the secondary portion of the DIS ignition coil. Control of the DIS ignition coil is monitored separately for the two electronic spark timing lines.

DTC 63 Will Set When

- No voltage is supplied by the electronic control module (ECM) through the electronic spark timing "B" line while reference pulses are received by the ECM from the crankshaft position sensor.
- This error occurs over 16 times.

Diagnostic Aids

- Inspect the electronic control module (ECM) harness connectors for backed-out terminals, improperly formed or damaged terminals, a poor terminal-to-wire connection, and a damaged wiring harness.
- If connections and the harness are OK, connect a digital voltmeter or an oscilloscope between the affected terminal and ground while moving the related connectors and the wiring harness. If the fault is induced, the voltage reading or the scope pattern will change.

Test Description

The number(s) below refer to step(s) on the diagnostic table.

3. This step checks both the electronic spark timing (EST) "B" and the ground from the electronic control module (ECM).
6. An open circuit or short to ground that is intermittent may be at fault in the EST "B" wire from the ECM.
11. If there are not any problems in the wiring of the circuit, yet no output from the ECM, the ECM is faulty.

DTC 63 - Electronic Spark Timing B" Shorted to Ground (2.0L SOHC)

Step	Action	Value(s)	Yes	No
1	Was the Diagnostic System Check performed?	-	Go to *Step 2*	Go to Diagnostic System Check"
2	1. Disconnect the direct ignition system (DIS) ignition coil connector. 2. Check the DIS ignition coil connector terminals to ensure that the terminals are correctly installed and none of them are touching. Is the problem found?	-	Go to *Step 9*	Go to *Step 3*
3	1. Connect a voltmeter between terminal A and terminal C of the DIS ignition coil. 2. Crank the engine. Does the voltage fluctuate within the values specified?	0.2-2.0 V	Go to *Step 4*	Go to *Step 10*
4	1. Turn the ignition OFF. 2. Disconnect the electronic control module (ECM) white connector. 3. Check for any damaged pins or terminals at the ECM connector terminal C3 or near terminal C3. Is the problem found?	-	Go to *Step 9*	Go to *Step 5*
5	Check for an open or short to ground between the DIS ignition coil connector terminal A and the ECM connector terminal C3. Is the problem found?	-	Go to *Step 7*	Go to *Step 6*
6	Check for an open or short to ground between the DIS ignition coil connector terminal A and the ECM connector terminal C3 while moving the connectors and the wiring harness of the ignition circuit. Is the problem found?	-	Go to *Step 7*	Go to *Step 8*
7	1. Repair the open or short to ground between the DIS ignition coil connector terminal A and the ECM connector terminal C3. 2. Clear any DTCs from the ECM. 3. Perform the Diagnostic System Check. Is the repair complete?	-	System OK	-
8	Check the wires and wiring harnesses of the ignition circuit for any damage that could cause an intermittent open or short to ground. Is the problem found?	-	Go to *Step 9*	Go to *Step 11*
9	1. Repair any wire or connector terminal as needed. 2. Clear any DTCs from the ECM. 3. Perform the Diagnostic System Check. Is the repair complete?	-	System OK	-
10	1. Turn the ignition OFF. 2. Replace the direct ignition system ignition coil assembly. 3. Clear any DTCs from the ECM. 4. Perform the Diagnostic System Check. Is the repair complete?	-	System OK	-
11	1. Replace the electronic control module. 2. Perform the Diagnostic System Check. Is the repair complete?	-	System OK	-

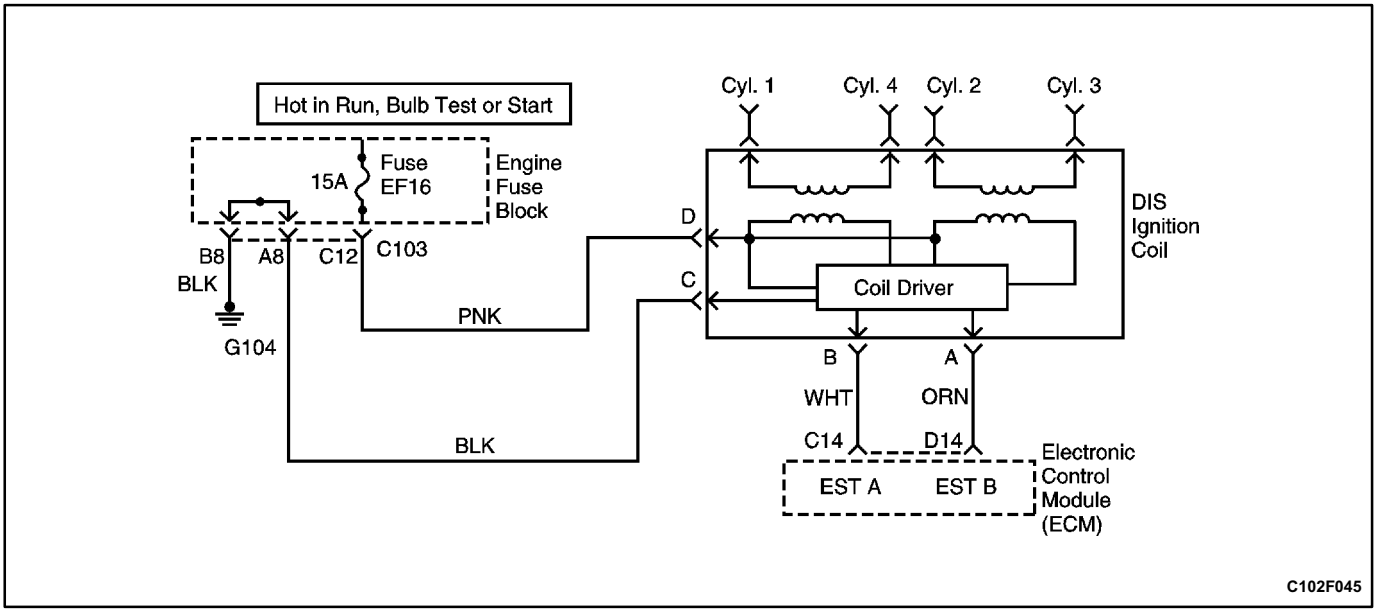

DIAGNOSTIC TROUBLE CODE (DTC) 63 ELECTRONIC SPARK TIMING "B" SHORTED TO GROUND (2.0L DOHC)

Circuit Description

The direct ignition system (DIS) ignition coil is supplied with battery voltage when the ignition is ON. The electronic control module (ECM) triggers the circuit for the DIS ignition coil. Voltage is then induced in the secondary portion of the DIS ignition coil. Control of the DIS ignition coil is monitored separately for the two electronic spark timing lines.

DTC 63 Will Set When

- No voltage is supplied by the electronic control module (ECM) through the electronic spark timing "B" line while reference pulses are received by the ECM from the crankshaft position sensor.
- This error occurs over 6 times.

Diagnostic Aids

- Inspect the electronic control module (ECM) harness connectors for backed-out terminals, improperly formed or damaged terminals, a poor terminal-to-wire connection, and a damaged wiring harness.
- If connections and the harness are OK, connect a digital voltmeter or an oscilloscope between the affected terminal and ground while moving the related connectors and the wiring harness. If the fault is induced, the voltage reading or the scope pattern will change.

Test Description

The number(s) below refer to step(s) on the diagnostic table.

3. This step checks both the electronic spark timing (EST) "B" and the ground from the electronic control module (ECM).
6. An open circuit or short to ground that is intermittent may be at fault in the EST "B" wire from the ECM.
11. If there are not any problems in the wiring of the circuit, yet no output from the ECM, the ECM is faulty.

DTC 63 - Electronic Spark Timing B" Shorted to Ground (2.0L DOHC)

Step	Action	Value(s)	Yes	No
1	Was the Diagnostic System Check performed?	-	Go to *Step 2*	Go to Diagnostic System Check"
2	1. Disconnect the direct ignition system (DIS) ignition coil connector. 2. Check the DIS ignition coil connector terminals to ensure that the terminals are correctly installed and none of them are touching. Is the problem found?	-	Go to *Step 9*	Go to *Step 3*
3	1. Connect a voltmeter between terminal A and terminal C of the DIS ignition coil. 2. Crank the engine. Does the voltage fluctuate within the values specified?	0.2-2.0 V	Go to *Step 4*	Go to *Step 10*
4	1. Turn the ignition OFF. 2. Disconnect the electronic control module (ECM) white connector. 3. Check for any damaged pins or terminals at or near the ECM connector terminal D14. Is the problem found?	-	Go to *Step 9*	Go to *Step 5*
5	Check for an open or short to ground between the DIS ignition coil connector terminal A and the ECM connector terminal D14. Is the problem found?	-	Go to *Step 7*	Go to *Step 6*
6	Check for an open or short to ground between the DIS ignition coil connector terminal A and the ECM connector terminal D14 while moving the connectors and the wiring harness of the ignition circuit. Is the problem found?	-	Go to *Step 7*	Go to *Step 8*
7	1. Repair the open or short to ground between the DIS ignition coil connector terminal A and the ECM connector terminal D14. 2. Clear any DTCs from the ECM. 3. Perform the Diagnostic System Check. Is the repair complete?	-	System OK	-
8	Check the wires and wiring harnesses of the ignition circuit for any damage that could cause an intermittent open or short to ground. Is the problem found?	-	Go to *Step 9*	Go to *Step 11*
9	1. Repair any wire or connector terminal as needed. 2. Clear any DTCs from the ECM. 3. Perform the Diagnostic System Check. Is the repair complete?	-	System OK	-
10	1. Turn the ignition OFF. 2. Replace the direct ignition system ignition coil assembly. 3. Clear any DTCs from the ECM. 4. Perform the Diagnostic System Check. Is the repair complete?	-	System OK	-
11	1. Replace the electronic control module. 2. Perform the Diagnostic System Check. Is the repair complete?	-	System OK	-

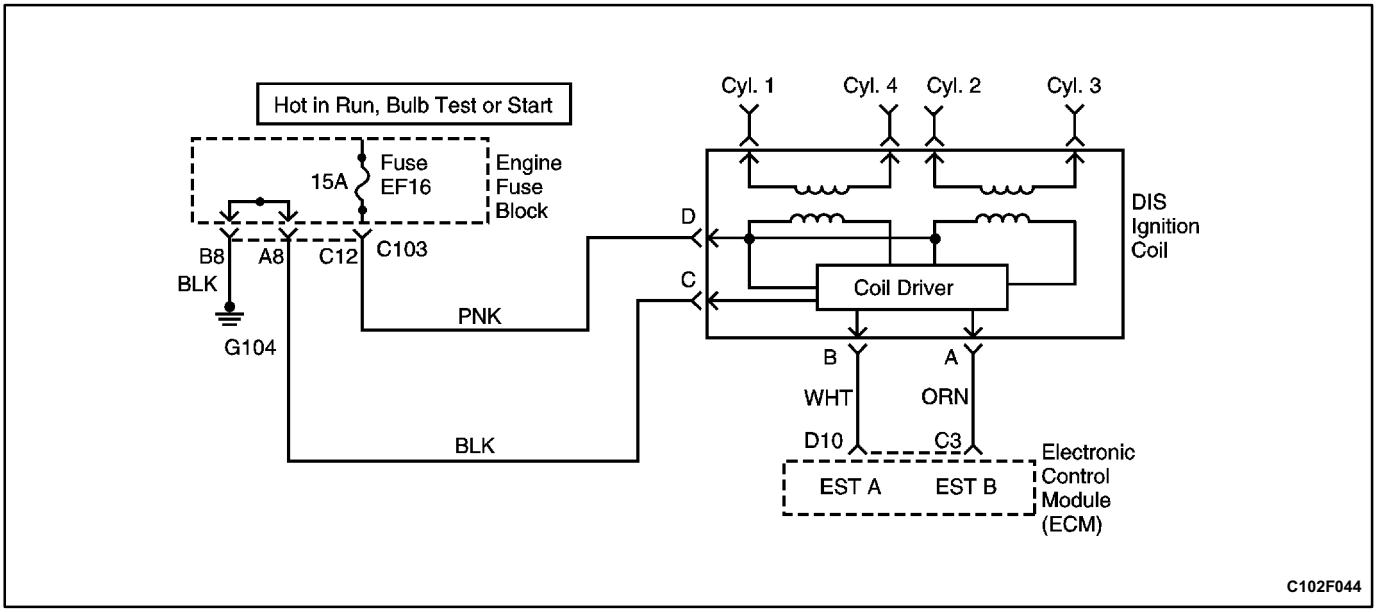

DIAGNOSTIC TROUBLE CODE (DTC) 64 ELECTRONIC SPARK TIMING "A" SHORTED TO GROUND (2.0L SOHC)

Circuit Description

The direct ignition system (DIS) ignition coil is supplied with battery voltage when the ignition is ON. The electronic control module (ECM) triggers the circuit for the DIS ignition coil. Voltage is then induced in the secondary portion of the DIS ignition coil. Control of the DIS ignition coil is monitored separately for the two electronic spark timing lines.

DTC 64 Will Set When

- No voltage is supplied by the electronic control module (ECM) through the electronic spark timing "A" line while reference pulses are received by the ECM from the crankshaft position sensor.
- This error occurs over 16 times.

Diagnostic Aids

- Inspect the electronic control module (ECM) harness connectors for backed-out terminals, improperly formed or damaged terminals, a poor terminal-to-wire connection, and a damaged wiring harness.
- If connections and the harness are OK, connect a digital voltmeter or an oscilloscope between the affected terminal and ground while moving the related connectors and the wiring harness. If the fault is induced, the voltage reading or the scope pattern will change.

Test Description

The number(s) below refer to step(s) on the diagnostic table.

3. This step checks both the electronic spark timing (EST) "A" and the ground from the electronic control module (ECM).
6. An open circuit or short to ground that is intermittent may be at fault in the EST "A" wire from the ECM.
11. If there are not any problems in the wiring of the circuit, yet no output from the ECM, the ECM is faulty.

DTC 64 - Electronic Spark Timing "A" Shorted to Ground (2.0L SOHC)

Step	Action	Value(s)	Yes	No
1	Was the Diagnostic System Check performed?	-	Go to *Step 2*	Go to "Diagnostic System Check"
2	1. Disconnect the direct ignition system (DIS) ignition coil connector. 2. Check the DIS ignition coil connector terminals to ensure that the terminals are correctly installed and none of them are touching. Is the problem found?	-	Go to *Step 9*	Go to *Step 3*
3	1. Connect a voltmeter between terminal B and terminal C of the DIS ignition coil. 2. Crank the engine. Does the voltage fluctuate within the values specified?	0.2-2.0 V	Go to *Step 4*	Go to *Step 10*
4	1. Turn the ignition OFF. 2. Disconnect the electronic control module (ECM) white connector. 3. Check for any damaged pins or terminals at the ECM connector terminal D10 or near terminal D10. Is the problem found?	-	Go to *Step 9*	Go to *Step 5*
5	Check for an open or short to ground between the DIS ignition coil connector terminal B and the ECM connector terminal D10. Is the problem found?	-	Go to *Step 7*	Go to *Step 6*
6	Check for an open or short to ground between the DIS ignition coil connector terminal B and the ECM connector terminal D10 while moving the connectors and the wiring harness of the ignition circuit. Is the problem found?	-	Go to *Step 7*	Go to *Step 8*
7	1. Repair the open or short to ground between the DIS ignition coil connector terminal B and the ECM connector terminal D10. 2. Clear any DTCs from the ECM. 3. Perform the Diagnostic System Check. Is the repair complete?	-	System OK	-
8	Check the wires and wiring harnesses of the ignition circuit for any damage that could cause an intermittent open or short to ground. Is the problem found?	-	Go to *Step 9*	Go to *Step 11*
9	1. Repair any wire or connector terminal as needed. 2. Clear any DTCs from the ECM. 3. Perform the Diagnostic System Check. Is the repair complete?	-	System OK	-
10	1. Turn the ignition OFF. 2. Replace the direct ignition system ignition coil assembly. 3. Clear any DTCs from the ECM. 4. Perform the Diagnostic System Check. Is the repair complete?	-	System OK	-
11	1. Replace the electronic control module. 2. Perform the Diagnostic System Check. Is the repair complete?	-	System OK	-

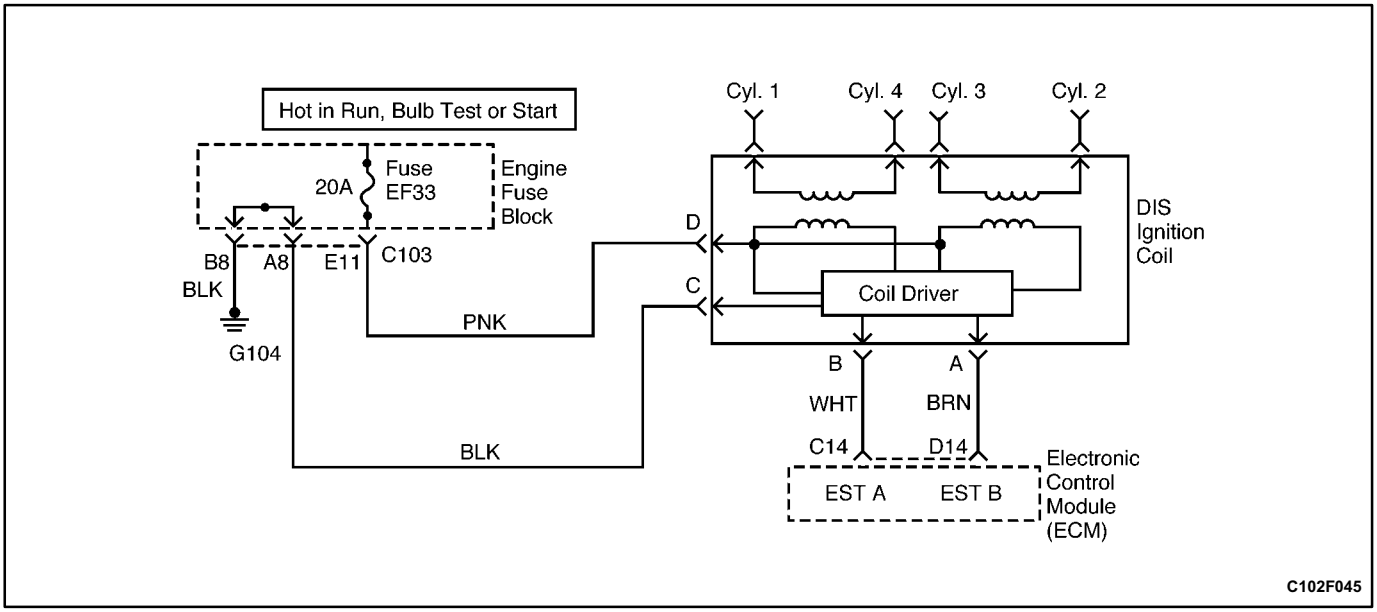

DIAGNOSTIC TROUBLE CODE (DTC) 64 ELECTRONIC SPARK TIMING "A" SHORTED TO GROUND (2.0L DOHC)

Circuit Description

The direct ignition system (DIS) ignition coil is supplied with battery voltage when the ignition is ON. The electronic control module (ECM) triggers the circuit for the DIS ignition coil. Voltage is then induced in the secondary portion of the DIS ignition coil. Control of the DIS ignition coil is monitored separately for the two electronic spark timing lines.

DTC 64 Will Set When

- No voltage is supplied by the electronic control module (ECM) through the electronic spark timing "A" line while reference pulses are received by the ECM from the crankshaft position sensor.
- This error occurs over 6 times.

Diagnostic Aids

- Inspect the electronic control module (ECM) harness connectors for backed-out terminals, improperly formed or damaged terminals, a poor terminal-to-wire connection, and a damaged wiring harness.
- If connections and the harness are OK, connect a digital voltmeter or an oscilloscope between the affected terminal and ground while moving the related connectors and the wiring harness. If the fault is induced, the voltage reading or the scope pattern will change.

Test Description

The number(s) below refer to step(s) on the diagnostic table.

3. This step checks both the electronic spark timing (EST) "A" and the ground from the electronic control module (ECM).
6. An open circuit or short to ground that is intermittent may be at fault in the EST "A" wire from the ECM.
11. If there are not any problems in the wiring of the circuit, yet no output from the ECM, the ECM is faulty.

DTC 64 - Electronic Spark Timing "A" Shorted to Ground (2.0L DOHC)

Step	Action	Value(s)	Yes	No
1	Was the Diagnostic System Check performed?	-	Go to *Step 2*	Go to "Diagnostic System Check"
2	1. Disconnect the direct ignition system (DIS) ignition coil connector. 2. Check the DIS ignition coil connector terminals to ensure that the terminals are correctly installed and none of them are touching. Is the problem found?	-	Go to *Step 9*	Go to *Step 3*
3	1. Connect a voltmeter between terminal B and terminal C of the DIS ignition coil. 2. Crank the engine. Does the voltage fluctuate within the values specified?	0.2-2.0 V	Go to *Step 4*	Go to *Step 10*
4	1. Turn the ignition OFF. 2. Disconnect the electronic control module (ECM) white connector. 3. Check for any damaged pins or terminals at the ECM connector terminal C14 or near terminal C14. Is the problem found?	-	Go to *Step 9*	Go to *Step 5*
5	Check for an open or short to ground between the DIS ignition coil connector terminal B and the ECM connector terminal C14. Is the problem found?	-	Go to *Step 7*	Go to *Step 6*
6	Check for an open or short to ground between the DIS ignition coil connector terminal B and the ECM connector terminal C14 while moving the connectors and the wiring harness of the ignition circuit. Is the problem found?	-	Go to *Step 7*	Go to *Step 8*
7	1. Repair the open or short to ground between the DIS ignition coil connector terminal B and the ECM connector terminal C14. 2. Clear any DTCs from the ECM. 3. Perform the Diagnostic System Check. Is the repair complete?	-	System OK	-
8	Check the wires and wiring harnesses of the ignition circuit for any damage that could cause an intermittent open or short to ground. Is the problem found?	-	Go to *Step 9*	Go to *Step 11*
9	1. Repair any wire or connector terminal as needed. 2. Clear any DTCs from the ECM. 3. Perform the Diagnostic System Check. Is the repair complete?	-	System OK	-
10	1. Turn the ignition OFF. 2. Replace the direct ignition system ignition coil assembly. 3. Clear any DTCs from the ECM. 4. Perform the Diagnostic System Check. Is the repair complete?	-	System OK	-
11	1. Replace the electronic control module. 2. Perform the Diagnostic System Check. Is the repair complete?	-	System OK	-

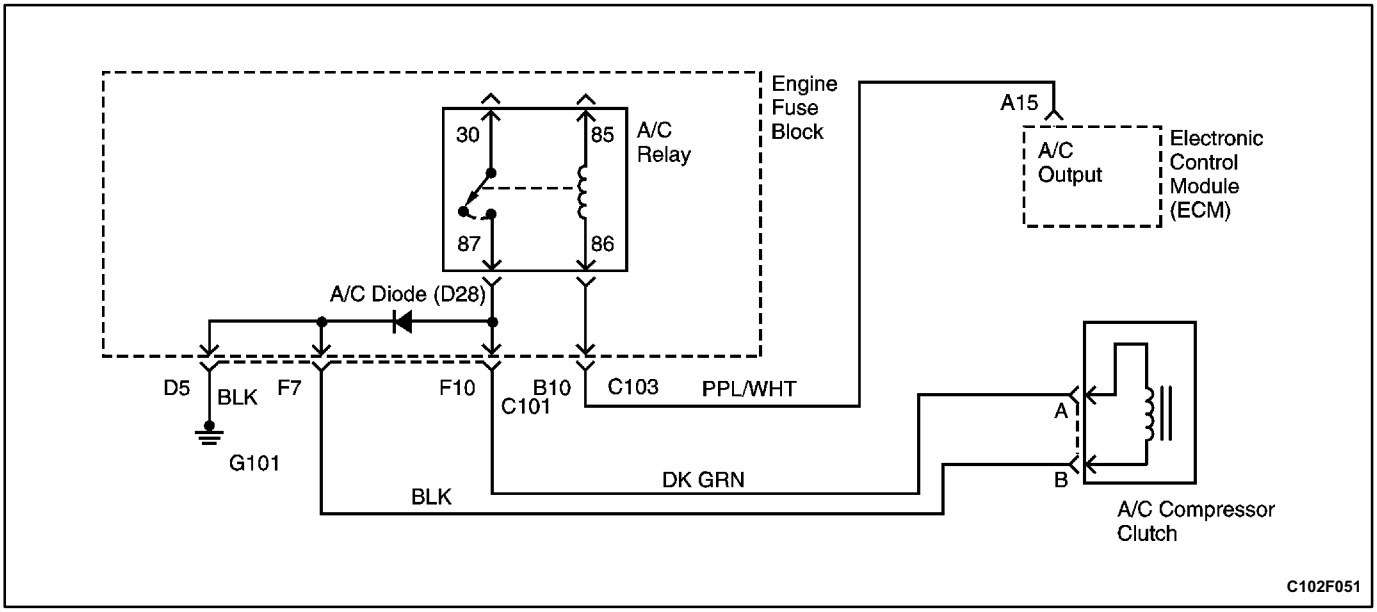

DIAGNOSTIC TROUBLE CODE (DTC) 87 AIR CONDITIONING COMPRESSOR RELAY SHORTED TO GROUND (2.0L DOHC)

Circuit Description

When the A/C switch is turned ON, the electronic control module (ECM) grounds the A/C compressor relay to initiate A/C compressor operation. Under various operating conditions, the ECM will interrupt A/C compressor operation.

DTC 87 Will Set When

- A short to ground condition exists and is present for more than 2 seconds.

Diagnostic Aids

- Inspect the electronic control module (ECM) wiring harness connectors for improper mating, broken locks, improperly formed or damaged terminals, a poor terminal-to-wire connection, and a damaged harness.
- If the connections and the wiring harness are in good condition, connect a test light between the A/C compressor relay connector terminal 85 and battery positive while moving related connectors. If the fault is induced, the test light will turn on. This may help to isolate the location of an intermittent problem.

Test Description

The number(s) below refer to step(s) on the diagnostic table.

2. With the ignition OFF, the electronic control module (ECM) should not be applying ground to the A/C compressor relay.
3. If the test light is still on after disconnecting the ECM red connector, the wire between the A/C compressor relay and the ECM is shorted to ground. If the test light goes off, the ECM is at fault.

DTC 87 - Air Conditioning Compressor Relay Shorted to Ground (2.0L DOHC)

Step	Action	Value(s)	Yes	No
1	Determine whether the Diagnostic System Check has been performed. Was the Diagnostic System Check performed?	-	Go to *Step 2*	Go to "Diagnostic System Check"
2	1. Disconnect the A/C compressor relay. 2. Connect a test light between the A/C compressor relay connector terminal 86 and battery positive. Is the test light on?	-	Go to *Step 3*	Go to "Diagnostic Aids"
3	Disconnect the electronic control module (ECM) red connector. Is the test light on?	-	Go to *Step 4*	Go to *Step 5*
4	1. Repair the short to ground in the wire between the A/C compressor relay connector terminal 86 and the ECM connector terminal A15. 2. Clear any diagnostic trouble codes (DTCs) from the ECM. 3. Perform the Diagnostic System Check. Is the repair complete?	-	System OK	-
5	1. Replace the electronic control module. 2. Perform the Diagnostic System Check. Is the repair complete?	-	System OK	-

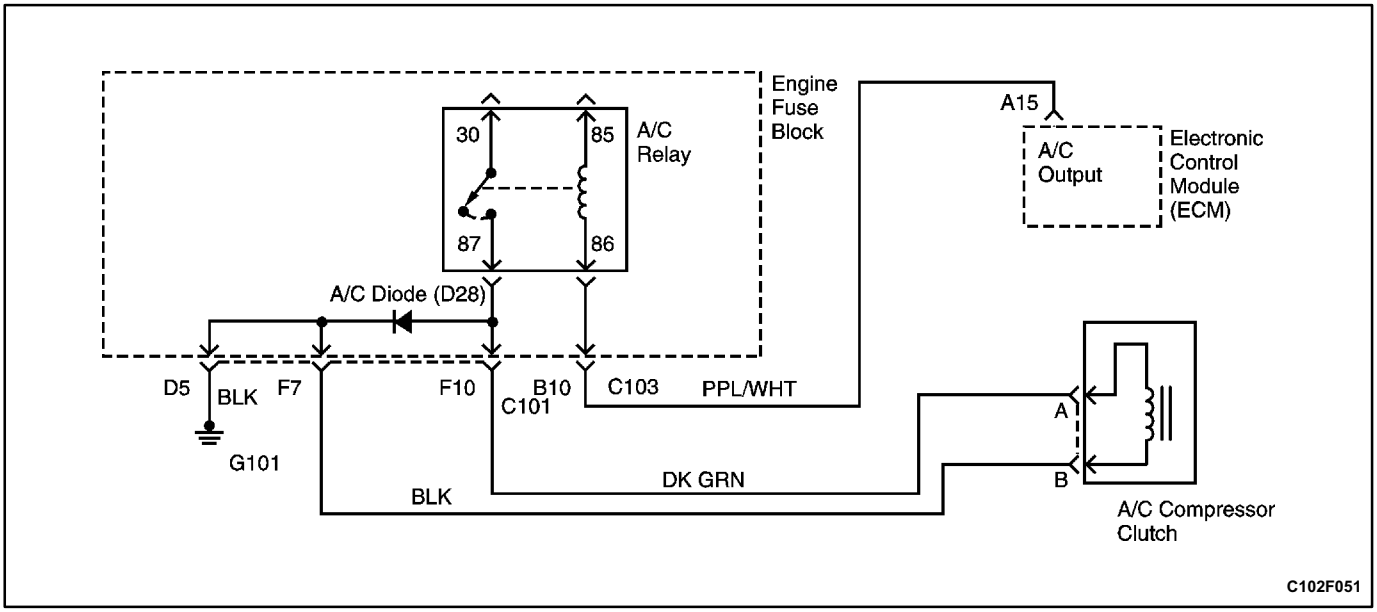

DIAGNOSTIC TROUBLE CODE (DTC) 88
AIR CONDITIONING COMPRESSOR RELAY SHORTED TO BATTERY (2.0L DOHC)

Circuit Description

When the A/C switch is turned ON, the electronic control module (ECM) grounds the A/C compressor relay to initiate A/C compressor operation. Under various operating conditions, the ECM will interrupt A/C compressor operation.

DTC 88 Will Set When

- A short to battery voltage condition exists and is present for more than 2 seconds.

Diagnostic Aids

- Inspect the electronic control module (ECM) wiring harness connectors for improper mating, broken locks, improperly formed or damaged terminals, a poor terminal-to-wire connection, and a damaged harness.
- If the connections and the wiring harness are in good condition, connect a test light between the A/C compressor relay connector terminal 85 and ground while moving related connectors. If the fault is induced, the test light will turn on. This may help to isolate the location of an intermittent problem.

Test Description

The number(s) below refer to step(s) on the diagnostic table.

4. If the test light is still on after disconnecting the ECM red connector, the wire between the A/C compressor relay and the ECM is shorted to voltage. If the test light goes off, the ECM is at fault.

DTC 88 - Air Conditioning Compressor Relay Shorted to Battery (2.0L DOHC)

Step	Action	Value(s)	Yes	No
1	Determine whether the Diagnostic System Check has been performed. Was the Diagnostic System Check performed?	-	Go to *Step 2*	Go to "Diagnostic System Check"
2	1. Disconnect the A/C compressor relay. 2. Measure the resistance between the A/C compressor relay terminals 85 and 86. Does the resistance measure near the value specified?	≈ 0 Ω	Go to *Step 6*	Go to *Step 3*
3	Connect a test light between the A/C compressor relay connector terminal 86 and ground. Is the test light on?	-	Go to *Step 4*	Go to "Diagnostic Aids"
4	Disconnect the electronic control module (ECM) red connector. Is the test light on?	-	Go to *Step 5*	Go to *Step 7*
5	1. Repair the short to voltage in the wire between the A/C compressor relay connector terminal 86 and the ECM connector terminal A15. 2. Clear any diagnostic trouble codes (DTCs) from the ECM. 3. Perform the Diagnostic System Check. Is the repair complete?	-	System OK	-
6	1. Replace the A/C compressor relay. 2. Clear any DTCs from the ECM. 3. Perform the Diagnostic System Check. Is the repair complete?	-	System OK	-
7	1. Replace the electronic control module. 2. Perform the Diagnostic System Check. Is the repair complete?	-	System OK	-

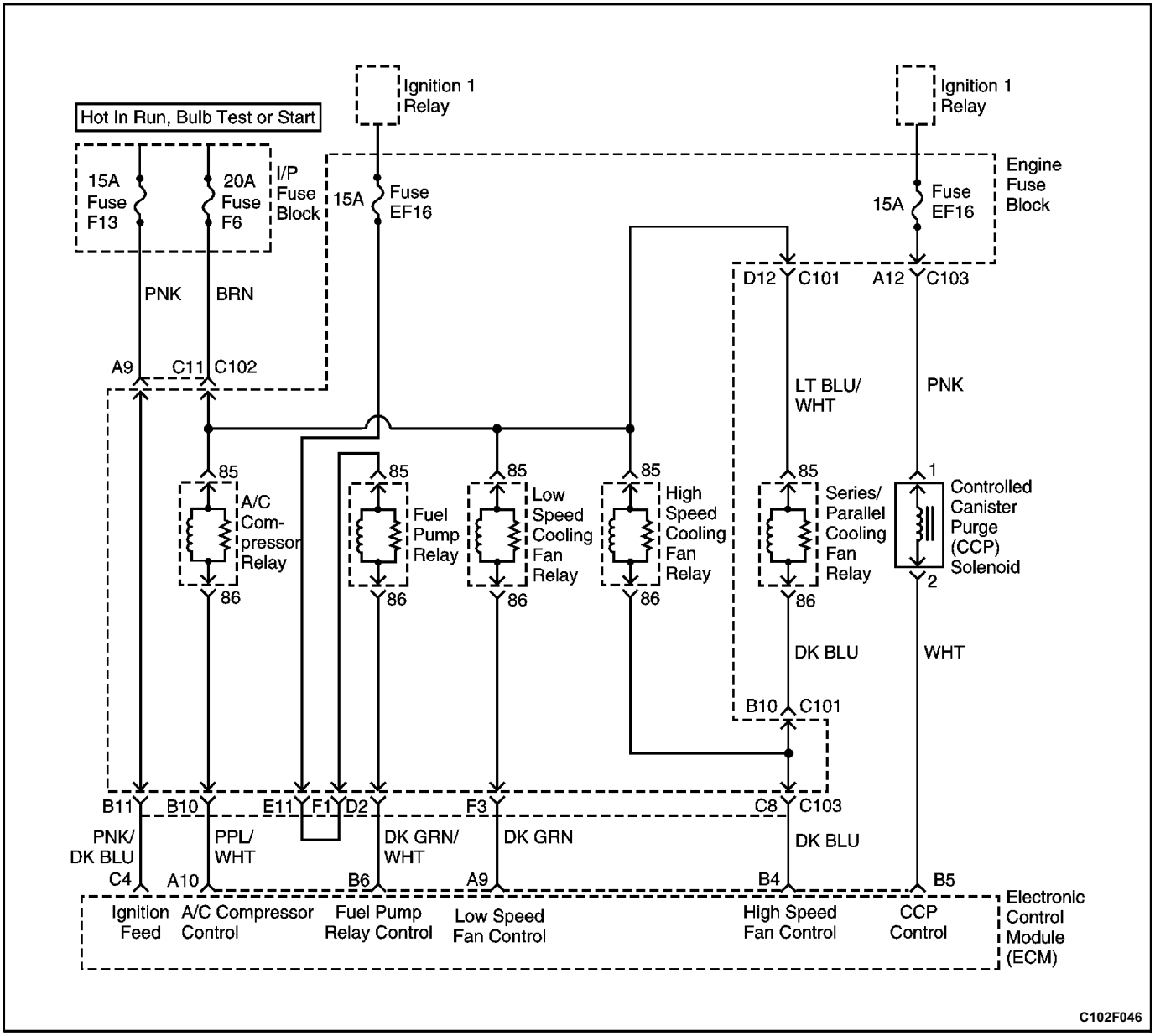

DIAGNOSTIC TROUBLE CODE (DTC) 92
QDM FAILURE (2.0L SOHC)

Circuit Description

The electronic control module (ECM) is used to control several components such as those illustrated above. The ECM controls these devices through the use of a quad driver module (QDM). When the ECM is commanding a component on, the voltage potential of the output circuit will be low" (near 0 volts). When the ECM is commanding the output circuit to a component off, the voltage potential of the circuit will be high" (near battery voltage). The primary function of the QDM is to supply the ground for the component being controlled.

The QDM has a fault line which is monitored by the ECM. This ECM will compare the voltage at the QDM based on accepted values of the fault line. If the QDM fault detection circuit senses a voltage other than the accepted value, the diagnostic trouble code (DTC) 92 will be set.

The ECM has an internally protected QDM. This internal protection can be compared to a circuit breaker. If too much current flows in a controlled circuit, this type of QDM turns itself off. This allows the QDM to survive a shorted relay, solenoid, or wire. Repair the fault in the output circuit and the QDM will return to normal operation. It is not necessary to replace the ECM unless it is determined that the ECM itself is faulty.

DTC Will Set When

- A QDM fault has been detected consecutively three times.

Diagnostic Aids

- Related symptoms of a QDM fault, such components on all the time or never on, will isolate the problem circuit.
- Monitor the voltage at connector terminals shown in the wiring diagram while moving related harness connectors, including the ECM harness. This may help in locating an intermittent condition.
- Check for bent connector terminals at the ECM connectors and the connectors of the relays and solenoids.
- Check for bent pins at the ECM.
- If the DTC 92 reoccurs with no apparent connector problem, replace the ECM.

Test Description

The number(s) below refer to step(s) on the diagnostic table.

2. The electronic control module (ECM) does not know which controlled circuit caused the DTC 92. This step will go through each of the circuits to determine which is at fault.
3. By grounding the assembly line diagnostic link (ALDL), this causes the ECM to actuate all relays and solenoids.
4. By removing the jumper from the ALDL, only the ignition feed should be present to the relay or solenoid. The ECM should no longer be supplying a ground to complete the circuit.
5. With the ECM connectors disconnected, only a short to ground in the wiring between the affected component and the ECM will allow the test light to turn on.
7. If there are no problems found in the wiring and the connections are OK, replace the affected relay or solenoid.
11. If there is no ignition feed to the affected component, check for a blown fuse or open in the wiring. If the fuse is blown, locate and repair the short to ground in that ignition feed circuit.

DTC 92 - QDM Failure (2.0L SOHC)

Step	Action	Value(s)	Yes	No
1	Was the Diagnostic System Check performed?	-	Go to *Step 2*	Go to "Diagnostic System Check"
2	1. Disconnect the electronic control module (ECM) red connector. 2. Turn the ignition ON. 3. Connect an ammeter (set to 2 amp scale) between each of the following ECM connector terminals and ground: ● A10 - Fan low relay. ● A14 - Fan high relay. ● A15 - A/C compressor relay. ● A12 - Fuel pump relay. ● A13 - CCP solenoid (SOHC). Does the amperage of all circuits measure within the value specified?	<0.75 amps but not 0.0 amps	Go to "Diagnostic Aids"	Go to *Step 3*
3	1. Turn the ignition OFF. 2. Connect the ECM red connector. 3. Use the wiring diagram to determine the specific component terminals to be tested. 4. Disconnect the relay/solenoid from the affected circuit. 5. Jumper terminals A and B of the assembly line diagnostic link (ALDL). 6. Turn the ignition ON. 7. Connect a test light between the connector terminals for the component of the affected circuit. Is the test light on?	-	Go to *Step 4*	Go to *Step 8*

DTC 92 - QDM Failure (1.8L and 2.0L SOHC) (Cont'd)

Step	Action	Value(s)	Yes	No
4	Remove the jumper from the ALDL. Is the test light on?	-	Go to *Step 5*	Go to *Step 7*
5	1. Turn the ignition OFF. 2. Disconnect the ECM red connector. 3. Turn the ignition ON. 4. Connect a test light between the connector terminals for the component of the affected circuit. Is the test light on?	-	Go to *Step 6*	Go to *Step 12*
6	1. Turn the ignition OFF. 2. Repair the short to ground between the component of the affected circuit and the ECM. 3. Connect the ECM red connector. 4. Clear any DTCs from the ECM. 5. Perform the Diagnostic System Check. Is the repair complete?	-	System OK	-
7	1. Turn the ignition OFF. 2. Check for poor connections and repair as needed. 3. If the connections are OK, replace the component of the affected circuit. 4. Clear any DTCs from the ECM. 5. Perform the Diagnostic System Check. Is the repair complete?	-	System OK	-
8	Connect the test light between the ignition feed connector terminal for the component of the affected circuit and ground. Is the test light on?	-	Go to *Step 9*	Go to *Step 11*
9	1. Turn the ignition OFF. 2. Check for an open in the wiring between the component of the affected circuit and the ECM. Is the problem found?	-	Go to *Step 10*	Go to *Step 12*
10	1. Repair the open wire. 2. Clear any DTCs from the ECM. 3. Perform the Diagnostic System Check. Is the repair complete?	-	System OK	-
11	1. Repair the open in the affected component ignition feed circuit. 2. Clear any DTCs from the ECM. 3. Perform the Diagnostic System Check. Is the repair complete?	-	System OK	-
12	1. Replace the ECM. 2. Clear any DTCs from the ECM. 3. Perform the Diagnostic System Check. Is the repair complete?	-	System OK	-

BLANK

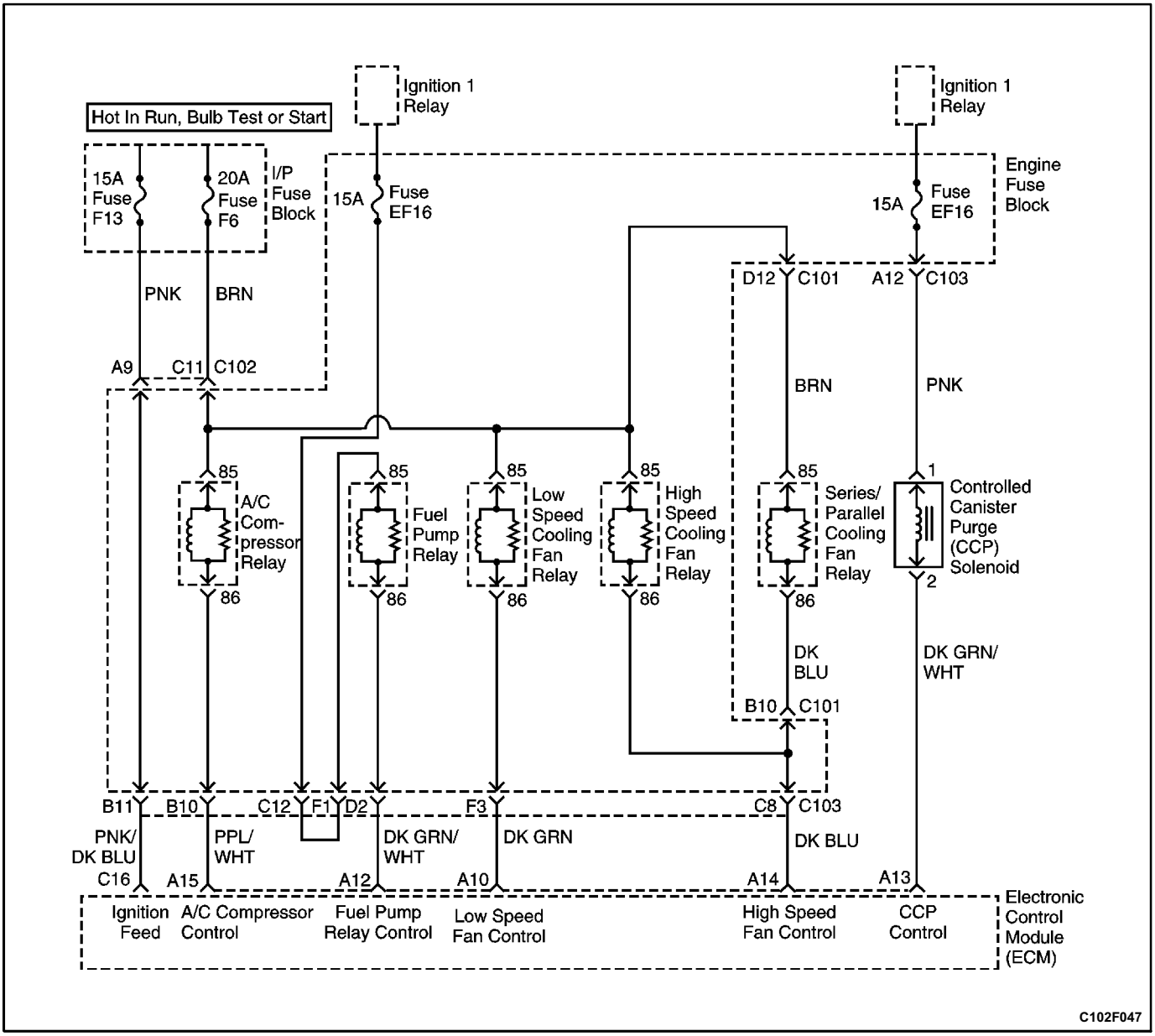

DIAGNOSTIC TROUBLE CODE (DTC) 93
QDM FAILURE (2.0L DOHC)

Circuit Description

The electronic control module (ECM) is used to control several components such as those illustrated above. The ECM controls these devices through the use of a quaddriver module (QDM). When the ECM is commanding a component on, the voltage potential of the output circuit will be low" (near 0 volts). When the ECM is commanding the output circuit to a component off, the voltage potential of the circuit will be high" (near battery voltage). The primary function of the QDM is to supply the ground for the component being controlled.

The ECM has an internally protected QDM. This internal protection can be compared to a circuit breaker. If too much current flows in a controlled circuit, this type of QDM turns itself off. This allows the QDM to survive a shorted relay, solenoid, or wire. Repair the fault in the output circuit and the QDM will return to normal operation. It is not necessary to replace the ECM unless it is determined that the ECM itself is faulty.

Each QDM has a fault line which is monitored by the ECM. The ECM will compare the voltage at the QDM based on accepted values of the fault line. If the QDM fault detection circuit senses a voltage other than the accepted value, the diagnostic trouble code (DTC) 93 will be set.

DTC 93 Will Set When

- A QDM fault has been detected consecutively three times.

Diagnostic Aids

- Related symptoms of a QDM fault, such components on all the time or never on, will isolate the problem circuit.
- Monitor the voltage at connector terminals shown in the wiring diagram while moving related harness connectors, including the ECM harness. This may help in locating an intermittent condition.
- Check for bent connector terminals at the ECM connectors and the connectors of the relays and solenoids.
- Check for bent pins at the ECM.
- If the DTC 93 reoccurs with no apparent connector problem, replace the ECM.

Test Description

The number(s) below refer to step(s) on the diagnostic table.

2. The electronic control module (ECM) does not know which controlled circuit caused the DTC 93. This step will go through each of the circuits to determine which is at fault.
3. By grounding the assembly line diagnostic link (ALDL), this causes the ECM to actuate all relays and solenoids.
4. By removing the jumper from the ALDL, only the ignition feed should be present to the relay or solenoid. The ECM should no longer be supplying a ground to complete the circuit.
5. With the ECM connectors disconnected, only a short to ground in the wiring between the affected component and the ECM will allow the test light to turn on.
7. If there are no problems found in the wiring and the connections are OK, replace the affected relay or solenoid.
11. If there is no ignition feed to the affected component, check for a blown fuse or open in the wiring. If the fuse is blown, locate and repair the short to ground in that ignition feed circuit.

DTC 93 - QDM Failure (2.0L DOHC)

Step	Action	Value(s)	Yes	No
1	Was the Diagnostic System Check performed?	-	Go to *Step 2*	Go to "Diagnostic System Check"
2	1. Disconnect the electronic control module (ECM) red connector. 2. Turn the ignition ON. 3. Connect an ammeter (set to 2 amp scale) between each of the following ECM connector terminals and ground: • A10 - Fan low relay. • A14 - Fan high relay. • A15 - A/C compressor relay. • A12 - Fuel pump relay. • A13 - CCP solenoid. Does the amperage of all circuits measure within the value specified?	<0.75 amps but not 0.0 amps	Go to "Diagnostic Aids"	Go to *Step 3*
3	1. Turn the ignition OFF. 2. Connect the ECM red connector. 3. Use the wiring diagram to determine the specific component terminals to be tested. 4. Disconnect the relay/solenoid from the affected circuit. 5. Jumper terminals A and B of the assembly line diagnostic link (ALDL). 6. Turn the ignition ON. 7. Connect a test light between the connector terminals for the component of the affected circuit. Is the test light on?	-	Go to *Step 4*	Go to *Step 8*

DTC 93 - QDM Failure (2.0L DOHC) (Cont'd)

Step	Action	Value(s)	Yes	No
4	Remove the jumper from the ALDL. Is the test light on?	-	Go to *Step 5*	Go to *Step 7*
5	1. Turn the ignition OFF. 2. Disconnect the ECM red connector. 3. Turn the ignition ON. 4. Connect a test light between the connector terminals for the component of the affected circuit. Is the test light on?	-	Go to *Step 6*	Go to *Step 12*
6	1. Turn the ignition OFF. 2. Repair the short to ground between the component of the affected circuit and the ECM. 3. Connect the ECM red connector. 4. Clear any DTCs from the ECM. 5. Perform the Diagnostic System Check. Is the repair complete?	-	System OK	-
7	1. Turn the ignition OFF. 2. Check for poor connections and repair as needed. 3. If the connections are OK, replace the component of the affected circuit. 4. Clear any DTCs from the ECM. 5. Perform the Diagnostic System Check. Is the repair complete?	-	System OK	-
8	Connect the test light between the ignition feed connector terminal for the component of the affected circuit and ground. Is the test light on?	-	Go to *Step 9*	Go to *Step 11*
9	1. Turn the ignition OFF. 2. Check for an open in the wiring between the component of the affected circuit and the ECM. Is the problem found?	-	Go to *Step 10*	Go to *Step 12*
10	1. Repair the open wire. 2. Clear any DTCs from the ECM. 3. Perform the Diagnostic System Check. Is the repair complete?	-	System OK	-
11	1. Repair the open in the affected component ignition feed circuit. 2. Clear any DTCs from the ECM. 3. Perform the Diagnostic System Check. Is the repair complete?	-	System OK	-
12	1. Replace the ECM. 2. Clear any DTCs from the ECM. 3. Perform the Diagnostic System Check. Is the repair complete?	-	System OK	-

DIAGNOSIS (2.2L DOHC)
SYSTEM DIAGNOSIS

DIAGNOSTIC AIDS

If an intermittent problem is evident, follow the guidelines below.

Preliminary Checks

Before using this section you should have already performed the On-Board Diagnostic System Check."

Perform a thorough visual inspection. This inspection can often lead to correcting a problem without further checks and can save valuable time. Inspect for the following conditions:

- Engine control module (ECM) grounds for being clean, tight, and in their proper location.
- Vacuum hoses for splits, kinks, collapsing and proper connections as shown on the Vehicle Emission Control Information label. Inspect thoroughly for any type of leak or restriction.
- Air leaks at the throttle body mounting area and the intake manifold sealing surfaces.
- Ignition wires for cracks, hardness, proper routing, and carbon tracking.
- Wiring for proper connections.
- Wiring for pinches or cuts.

Diagnostic Trouble Code Tables

Do not use the diagnostic trouble code (DTC) tables to try and correct an intermittent fault. The fault must be present to locate the problem.

Incorrect use of the DTC tables may result in the unnecessary replacement of parts.

Faulty Electrical Connections or Wiring

Most intermittent problems are caused by faulty electrical connections or wiring. Perform a careful inspection of suspect circuits for the following:

- Poor mating of the connector halves.
- Terminals not fully seated in the connector body.
- Improperly formed or damaged terminals. All connector terminals in a problem circuit should be carefully inspected, reformed, or replaced to insure contact tension.
- Poor terminal-to-wire connection. This requires removing the terminal from the connector body.

Road Test

If a visual inspection does not find the cause of the problem, the vehicle can be driven with a voltmeter or a scan tool connected to a suspected circuit. An abnormal voltage or scan tool reading will indicate that the problem is in that circuit.

If there are no wiring or connector problems found and a DTC was stored for a circuit having a sensor, except for DTC P0171 and DTC P0172, replace the sensor.

Fuel System

Some intermittent driveability problems can be attributed to poor fuel quality. If a vehicle is occasionally running rough, stalling, or otherwise performing badly, ask the customer about the following fuel buying habits:

- Do they always buy from the same source? If so, fuel quality problems can usually be discounted.
- Do they buy their fuel from whichever fuel station that is advertising the lowest price? If so, check the fuel tank for signs of debris, water, or other contamination.

IDLE LEARN PROCEDURE

Whenever the battery cables, the engine control module (ECM), or the fuse is disconnected or replaced, the following idle learn procedure must be performed:

1. Turn the ignition ON for 5 seconds.
2. Turn the ignition OFF for 10 seconds.
3. Turn the ignition ON for 5 seconds.
4. Start the engine in park/neutral.
5. Allow the engine to run until the engine coolant is above 85°C (185°F).
6. Turn the A/C ON for 10 seconds, if equipped.
7. Turn the A/C OFF for 10 seconds, if equipped.
8. If the vehicle is equipped with an automatic transaxle, apply the parking brake. While pressing the brake pedal, place the transaxle in D (drive).
9. Turn the A/C ON for 10 seconds, if equipped.
10. Turn the A/C OFF for 10 seconds, if equipped.
11. Turn the ignition OFF. The idle learn procedure is complete.

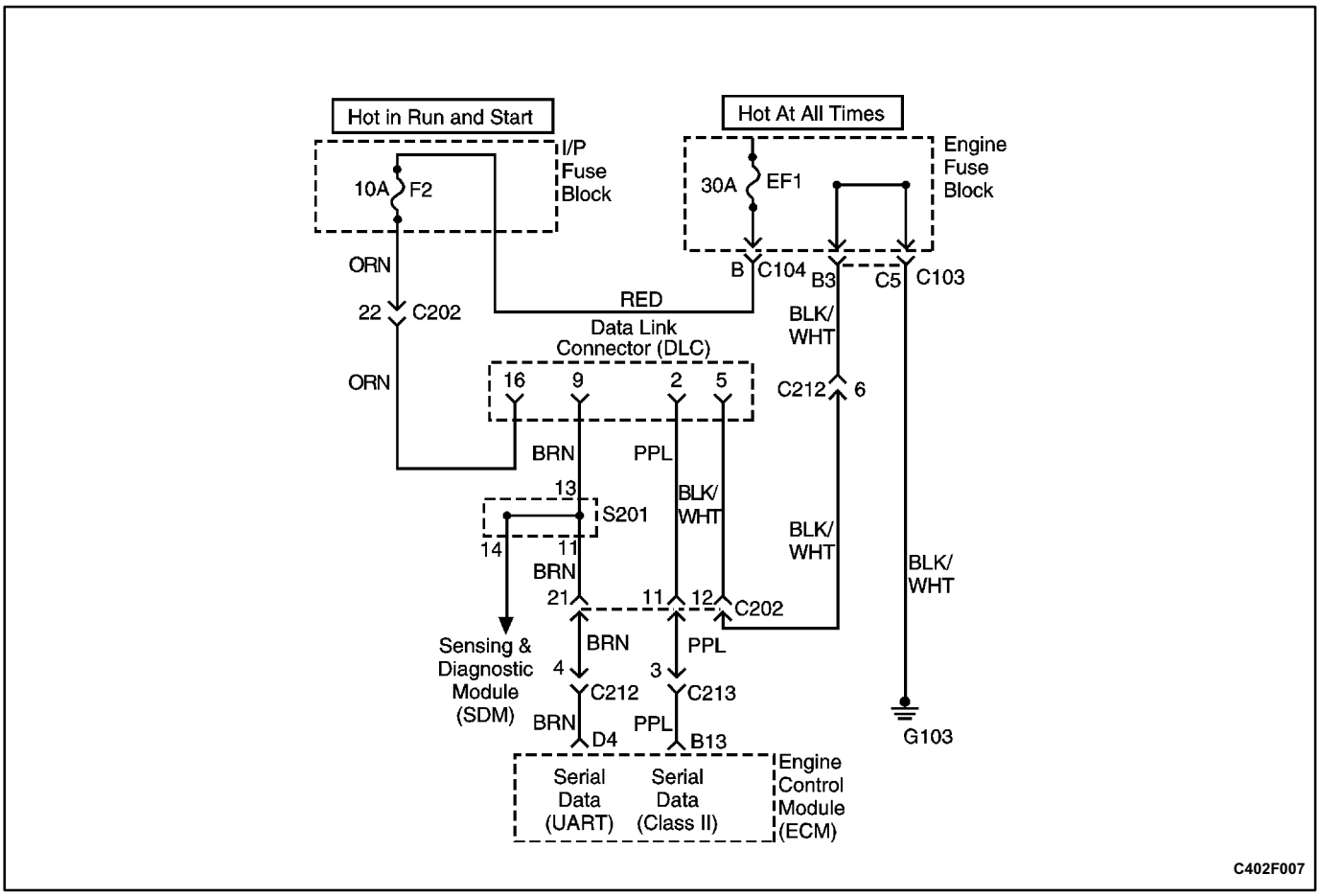

ON-BOARD DIAGNOSTIC (OBD) SYSTEM CHECK

Circuit Description

The OnBoard Diagnostic (OBD) System Check is the starting point for any driveability complaint diagnosis. Before using this procedure, perform a careful visual/physical check of the engine control module (ECM) and the engine grounds for cleanliness and tightness.

The OBD system check is an organized approach to identifying a problem created by an electronic engine control system malfunction.

Diagnostic Aids

An intermittent may be caused by a poor connection, rubbedthrough wire insulation or a wire broken inside the insulation. Check for poor connections or a damaged harness. Inspect the ECM harness and connections for improper mating, broken locks, improperly formed or damaged terminals, poor terminal-to-wire connections, and damaged harness.

Test Description

Numbers below refer to the step number(s) on the Diagnostic Table:

1. The Malfunction Indicator Lamp (MIL) should be on steady with the ignition on and the engine off. If not, go to "Diagnostic Aids."
2. Checks the Class 2 data circuit and ensures that the ECM is able to transmit serial data.
3. This test ensures that the ECM is capable of controlling the MIL, and the MIL driver circuit is not shorted to ground.
4. If the engine will not start, refer to "Engine Cranks But Will Not Run" in this section.
7. A scan tool parameter which is not within the typical range may help to isolate the area which is causing the problem.
10. This vehicle is equipped with an ECM, which utilizes an electrically erasable programmable read only memory (EEPROM). The replacement ECM must be reprogrammed. Refer to the latest Techline procedure for ECM reprogramming.

OnBoard Diagnostic (OBD) System Check

Step	Action	Value(s)	Yes	No
1	1. Turn the ignition ON with the engine OFF. 2. Observe the Malfunction Indicator Lamp (MIL). Is the MIL on?	-	Go to *Step 2*	Go to "No Malfunction Indicator Lamp"
2	1. Turn the ignition OFF. 2. Install the scan tool. 3. Turn the ignition ON. 4. Attempt to display the engine control module (ECM) engine data with the scan tool. Does the scan tool display the ECM engine data?	-	Go to *Step 3*	Go to *Step 8*
3	1. Using the scan tool output test function, select the MIL dash lamp control and command the MIL off. 2. Observe the MIL. Does the MIL turn off?	-	Go to *Step 4*	Go to "Malfunction Indicator Lamp on Steady"
4	Attempt to start the engine. Does the engine start and continue to run?	-	Go to *Step 5*	Go to "Engine Cranks But Will Not Run"
5	Select DISPLAY DTC with the scan tool. Are any Diagnostic Trouble Codes stored?	-	Go to *Step 6*	Go to *Step 7*
6	Check the display for DTCs P0107, P0108, P0113, P0118, P0122, P0123, P0172, P1392. Are two or more of the following DTCs stored?	-	Go to "Multiple ECM Information Sensor DTCs Set"	Go to applicable DTC table
7	Compare the ECM data values displayed on the scan tool to the typical engine scan data values. Are the displayed values normal or close to the typical values?	-	Go to "ECM Output Diagnosis"	Go to indicated component system check
8	1. Turn the ignition OFF and disconnect the ECM. 2. Turn the ignition ON with the engine OFF. 3. Check the class 2 data circuit for an open, short to ground, or short to voltage. Also check the Data Link Connector (DLC) ignition feed circuit for an open or short to ground, and check the DLC ground circuits for an open. Is a problem found?	-	Go to *Step 9*	Go to *Step 10*
9	Repair the open, short to ground, or short to voltage in the class 2 data circuit or the DLC ignition feed circuit. Is the repair complete?	-	System OK	-
10	1. Attempt to reprogram the ECM. 2. Attempt to display the ECM data with the scan tool. Does the scan tool display ECM engine data?	-	Go to *Step 2*	Go to *Step 11*
11	Replace the ECM. Is the repair complete?	-	System OK	-

ECM OUTPUT DIAGNOSIS

Circuit Description

The engine control module (ECM) controls most components with electronic switches which complete a ground circuit when turned on. These switches are arranged in groups of 4 and 7, and they are called either a Surface Mounted Quad Driver Module, which can independently control up to 4 output terminals or an Output Driver Module (ODM), which can independently control up to 7 outputs. Not all of the outputs are always used.

Drivers are fault protected. If a relay or solenoid is shorted, having very low or zero resistance, or if the control side of the circuit is shorted to voltage, it would allow too much current flow into the ECM. The driver senses this and the output is either turned OFF or its internal resistance increases to limit current flow and protect the ECM and driver. The result is high output terminal voltage when it should be low. If the circuit from B+ to the component or the component is open, or the control side of the circuit is shorted to ground, terminal voltage will be low. Either of these conditions is considered to be a driver fault.

Drivers also have a fault line to indicate the presence of a current fault to the ECM's central processor. A scan tool displays the status of the driver fault lines as 0=OK and 1=Fault.

Diagnostic Aids

The scan tool has the ability to command certain components and functions ON and OFF. If a component or function does not have this capability, operate the vehicle during its normal function criteria to check for an open or shorted circuit.

An open or short to ground will appear in the open positions on the scan tool only when it is not commanded by the ECM or the scan tool, while a short to voltage will appear in the short positions on the scan tool only while the component is being commanded by the ECM or scan tool.

Test Description

Number(s) below refer to the step number(s) on the Diagnostic Table.

1. The OnBoard Diagnostic (OBD) System Check prompts the technician to complete some basic checks and store the freeze frame and failure records data on the scan tool if applicable. This creates an electronic copy of the data taken when the malfunction occurred. The information is then stored on the scan tool for later reference.
2. A 1 in any of the positions indicates that an open or short is present in the corresponding circuit for that position.
4. An open or short to ground will appear in the open positions on the scan tool only when it is not commanded by the ECM or scan tool, while a short to voltage will appear in the short positions on the scan tool only while the component is being commanded by the ECM or scan tool.
5. Proper operation of any component of function with no 1 in any operation of the positions indicates that system operation is normal at this time.
6. A component or function that failed to operate at this point indicates that the fault is not on the ECM side of the circuitry.
7. The 1 disappears after disconnecting the component electrical connector. This indicates that the component or component side wiring is at fault. If the scan tool indicates a fault after disconnecting the component electrical connector and verifying that no open or short is present in the circuit, then the ECM is faulty.
8. The replacement ECM must be reprogrammed. Refer to the latest Techline procedure for ECM reprogramming.
9. If no faults have been found at this point, refer to "Diagnostic Aids" in this section for additional checks and information.

ECM Output Diagnosis

Step	Action	Value(s)	Yes	No
1	Perform an On-Board Diagnostic (OBD) System Check. Is the check complete?	-	Go to *Step 2*	Go to "On-Board Diagnostic System Check"
2	Install the scan tool. Is there a number 1 below any of the numbered positions in the OUTPUT DRIVERS?	-	Go to *Step 3*	Go to *Step 4*
3	Check for an open or shorted circuit in any corresponding position (circuit) that contained a number 1 and repair as necessary. Is a repair necessary?	-	Go to *Step 10*	Go to *Step 8*
4	Command the output being checked with a scan tool while watching the corresponding position for each circuit. Do any of the positions change to a 1?	-	Go to *Step 7*	Go to *Step 5*
5	Command the output being checked with a scan tool while watching the corresponding position for each circuit. Does the component or function operate when commanded?	-	Go to *Step 10*	Go to the appropriate component repair
6	Repair the short to voltage in the corresponding circuit for position (circuit) that displayed a 1. Is the repair complete?	-	Go to *Step 10*	-
7	Disconnect the electrical connector to the component connected to the faulty circuit. Is a 1 still displayed in the corresponding OUTPUT DRIVER position?	-	Go to *Step 9*	Go to the appropriate component repair
8	Replace the engine control module (ECM). Is the repair complete?	-	Go to *Step 10*	-
9	Operate the vehicle within the conditions under which the original symptom was noted. Does the system now operate properly?	-	System OK	Go to *Step 2*

MULTIPLE ECM INFORMATION SENSOR DTCS SET

Circuit Description

The engine control module (ECM) monitors various sensors to determine engine operating conditions. The ECM controls fuel delivery, spark advance, transaxle operation, and emission control device operation based on the sensor inputs.

The ECM provides a sensor ground to all of the sensors. The ECM applies 5 volts through a pull-up resistor and monitors the voltage present between the sensor and the resistor to determine the status of the Engine Coolant Temperature Sensor (CTS), the Intake Manifold Air Temperature (MAT) sensor. The ECM provides the Exhaust Gas Recirculation (EGR) Pintle Position Sensor, the Throttle Position Sensor (TPS), the Manifold Absolute Pressure (MAP) sensor, and the Fuel Tank Pressure Sensor with a 5 volt reference and a sensor ground signal. The ECM monitors the separate feedback signals from these sensors to determine their operating status.

Diagnostic Aids

Be sure to inspect the ECM and the engine grounds for being secure and clean.

A short to voltage in one of the sensor circuits can cause one or more of the following DTCs to be set: P0108, P0113, P0118, P0123, P1106, P1111, P1115, P1121, P1625.

If a sensor input circuit has been shorted to voltage, ensure that the sensor is not damaged. A damaged sensor will continue to indicate a high or low voltage after the affected circuit has been repaired. If the sensor has been damaged, replace it.

An open in the sensor ground circuit between the ECM and the splice will cause one or more of the following DTCs to be set: P0108, P0113, P0118, P0123, P1106, P1111, P1115, P1121.

A short to ground in the 5 volt reference circuit or an open in the 5 volt reference circuit between the ECM and the splice will cause one or more of the following DTCs to be set: P0107, P0112, P0117, P0122, P1107, P1112, P1114, P1122.

Check for the following conditions:

- Inspect for a poor connection at the ECM. Inspect harness connectors for backed-out terminals, improper mating, broken locks, improperly formed or damaged terminals, and poor terminal-to-wire connection.
- Inspect the wiring harness for damage. If the harness appears to be OK, observe an affected sensor's displayed value on the scan tool with the ignition ON and the engine OFF while moving connectors and wiring harnesses related to the affected sensors. A change in the affected sensor's displayed value will indicate the location of the fault.

Test Description

Number(s) below refer to the step number(s) on the Diagnostic Table.

1. The On-Board Diagnostic (OBD) System Check prompts the technician to complete some basic checks and store the freeze frame and failure records data on the scan tool if applicable. This creates an electronic copy of the data taken when the malfunction occurred. The information is then stored on the scan tool for later reference.
9. A faulty EGR valve can leak a small amount of current from the ignition feed circuit to the 5 volt reference circuit. If the problem does not exist with the EGR valve disconnected, replace the EGR valve.
12 - 19. If a sensor input circuit has been shorted to voltage, ensure that the sensor has not been damaged. A damaged MAT or CTS sensor will continue to indicate a high voltage or low temperature after the affected circuit has been repaired. A damaged Air Conditioning Pressure (ACP), TP, MAP, Fuel Tank Pressure, or EGR Pintle Position sensor will indicate a high or low voltage or may be stuck at a fixed value after the affected circuit has been repaired. If the sensor has been damaged, replace it.
21. The replacement ECM must be reprogrammed. Refer to the latest Techline procedure for ECM reprogramming.

Multiple ECM Information Sensor DTCs Set

Step	Action	Value(s)	Yes	No
1	Perform an On-Board Diagnostic (OBD) System Check. Is the check performed?	-	Go to *Step 2*	Go to "On-Board Diagnostic System Check"

Multiple ECM Information Sensor DTCs Set (Cont'd)

Step	Action	Value(s)	Yes	No
2	1. Turn the ignition OFF and disconnect the engine control module (ECM). 2. Turn the ignition ON and check the 5 volt reference circuit for the following conditions: ● Poor connection at the ECM. ● Open between the ECM connector affected sensors shorted to ground or voltage. 3. If a problem is found, locate and repair the open or short circuit as necessary. Is a problem found?	-	Go to *Step 19*	Go to *Step 3*
3	1. Check the sensor ground circuit for the following conditions: ● Poor connection at the ECM or affected sensors. ● Open between the ECM connector and the affected sensors. 2. If a problem is found, repair it as necessary. Is a problem found?	-	Go to *Step 19*	Go to *Step 4*
4	Measure the voltage between the Exhaust Gas Recirculation (EGR) Pintle Position Sensor signal circuit at the ECM harness connector and ground. Does the voltage measure near the specified value?	0 V	Go to *Step 5*	Go to *Step 9*
5	Measure the voltage between the Manifold Absolute Pressure (MAP) sensor signal circuit and the ECM harness connector and ground. Does the voltage measure near the specified value?	0 V	Go to *Step 6*	Go to *Step 11*
6	Measure the voltage between the throttle position sensor (TPS) signal circuit and the ECM harness connector and ground. Does the voltage measure near the specified value?	0 V	Go to *Step 7*	Go to *Step 12*
7	Measure the voltage between the Intake Manifold Air Temperature (MAT) Sensor signal circuit and the ECM harness connector and ground. Does the voltage measure near the specified value?	0 V	Go to *Step 8*	Go to *Step 13*
8	Measure the voltage between the Engine Coolant Temperature (CTS) sensor signal circuit and the ECM harness connector and ground. Does the voltage measure near the specified value?	0 V	Go to *Step 16*	Go to *Step 14*
9	1. Disconnect the EGR valve. 2. Measure the voltage between the EGR Pintle Position sensor signal circuit and the ECM harness connector and ground. Does the voltage measure near the specified value?	0 V	Go to *Step 10*	Go to *Step 15*
10	Replace the EGR valve. Is the repair complete?	-	Go to *Step 19*	-
11	Locate and repair the short to voltage in the MAP sensor signal circuit. Is the repair complete?	-	Go to *Step 19*	-

Multiple ECM Information Sensor DTCs Set (Cont'd)

Step	Action	Value(s)	Yes	No
12	Locate and repair the short to voltage in the TPS signal circuit. Is the repair complete?	-	Go to *Step 19*	-
13	Locate and repair the short to voltage in the MAT sensor signal circuit. Is the repair complete?	-	Go to *Step 19*	-
14	Locate and repair the short to voltage in the CTS sensor signal circuit. Is the repair complete?	-	Go to *Step 19*	-
15	Locate and repair the short to voltage in the EGR Pintle Position sensor circuit. Is the repair complete?	-	Go to *Step 19*	-
16	Measure the voltage between the Fuel Tank Pressure sensor signal circuit and the ECM harness connector and ground. Does the voltage measure near the specified value?	0 V	Go to *Step 18*	Go to *Step 17*
17	Locate and repair the short to voltage in the Fuel Tank Pressure sensor signal circuit. Is the repair complete?	-	Go to *Step 19*	-
18	Replace the ECM. Is the repair complete?	-	Go to *Step 19*	-
19	1. Using the scan tool, clear the Diagnostic Trouble Codes (DTCs). 2. Start the engine and idle at normal operating temperature. 3. Operate the vehicle within the conditions for setting the DTCs as specified in the supporting text. Does the scan tool indicate that this diagnostic ran and passed?	-	Go to *Step 20*	Go to *Step 2*
20	Check if any additional DTCs are set. Are any DTCs displayed that have not been diagnosed?	-	Go to applicable DTC table	System OK

BLANK

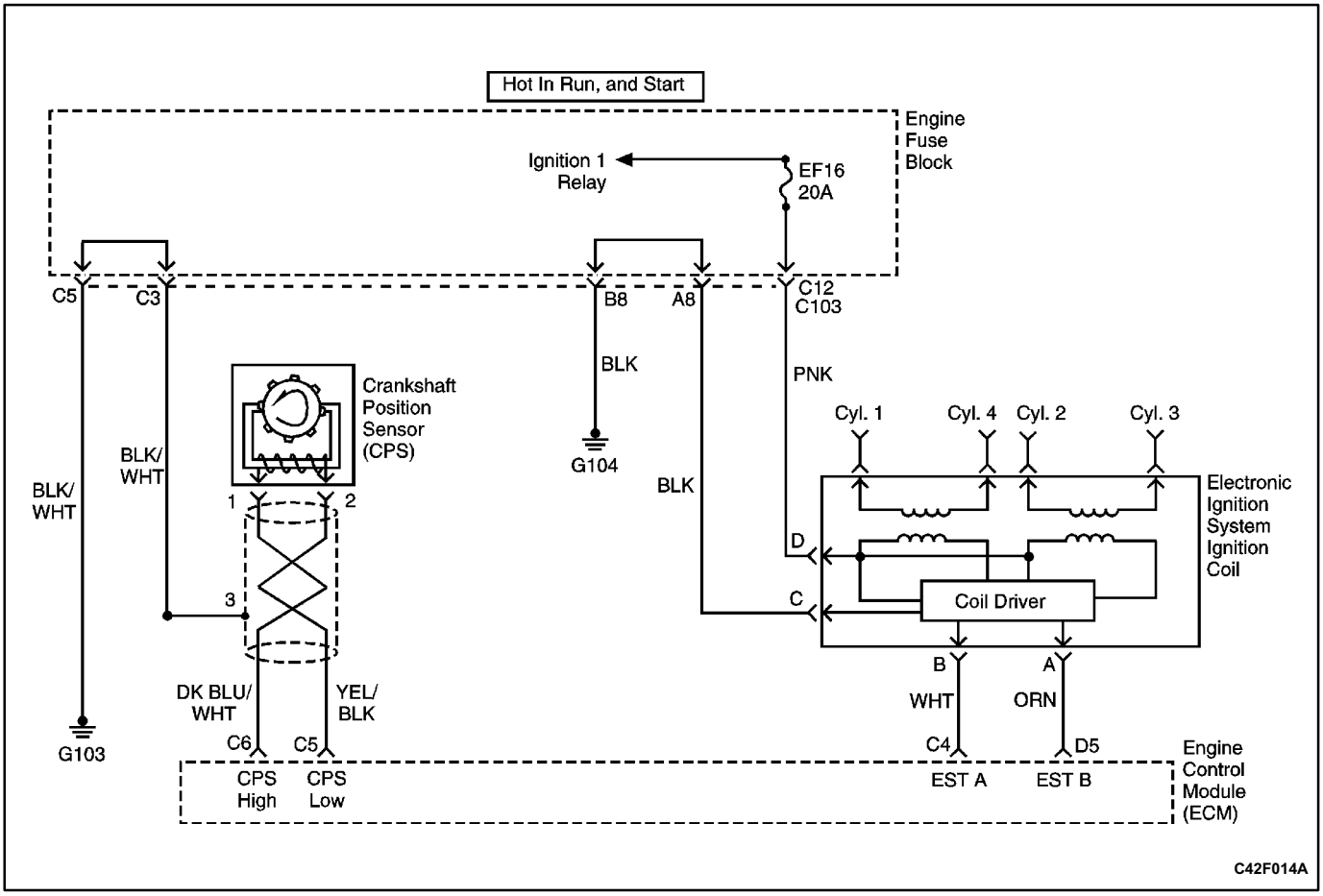
Hot In Run, and Start
Engine Fuse Block
Ignition 1 Relay
EF16 20A
C5
C3
B8
A8
C12 C103
BLK
PNK
Crankshaft Position Sensor (CPS)
Cyl. 1
Cyl. 4
Cyl. 2
Cyl. 3
BLK/ WHT
BLK/ WHT
G104
BLK
Electronic Ignition System Ignition Coil
D
C
Coil Driver
B
A
DK BLU/ WHT
YEL/ BLK
WHT
ORN
G103
C6
C5
C4
D5
CPS High
CPS Low
EST A
EST B
Engine Control Module (ECM)
C42F014A

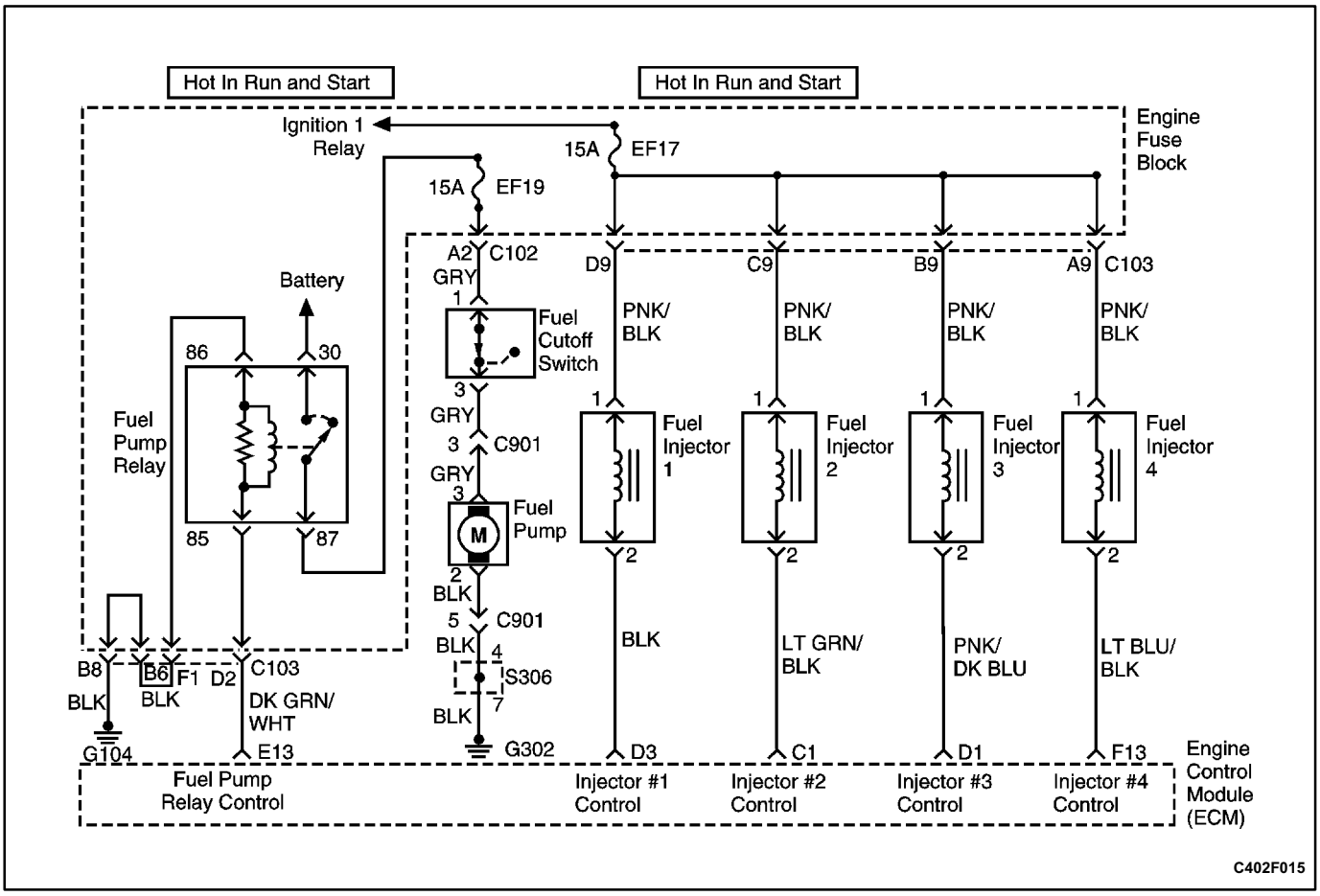
Hot In Run and Start
Hot In Run and Start
Engine Fuse Block
Ignition 1 Relay
15A EF17
15A EF19
A2 C102
D9
C9
B9
A9 C103
GRY
Battery
Fuel Cutoff Switch
PNK/ BLK
PNK/ BLK
PNK/ BLK
PNK/ BLK
86
30
Fuel Pump Relay
GRY
C901
GRY
Fuel Pump
Fuel Injector 1
Fuel Injector 2
Fuel Injector 3
Fuel Injector 4
85
87
BLK
C901
BLK
S306
BLK
B8
B6
F1
D2
C103
BLK
BLK
DK GRN/ WHT
BLK
LT GRN/ BLK
PNK/ DK BLU
LT BLU/ BLK
G104
E13
G302
D3
C1
D1
F13
Fuel Pump Relay Control
Injector #1 Control
Injector #2 Control
Injector #3 Control
Injector #4 Control
Engine Control Module (ECM)
C402F015

ENGINE CRANKS BUT WILL NOT RUN

Test Description

The number(s) below refer to step(s) on the diagnostic table.

3. By performing a compression test, it can be determined if the engine has the mechanical ability to run.
9. It is important to check for the presence of spark from all of the ignition wires. If spark is present from one to three of the ignition coil terminals, the crankshaft position sensor (CPS) is OK.
19. In checking the engine control module (ECM) outputs for the electronic spark timing signal, it is recommended to use an oscilloscope to view the varying voltage signals. In measuring these outputs with a voltmeter, intermittent errors may occur that cannot be seen by a voltmeter.
35. This step checks for proper operation of the ECM's control of the fuel pump circuit.
59. This step checks for a ground signal being supplied by the ECM to operate the fuel injectors. If there is no ground present during the cranking of the engine, and the fuel injector wiring is OK, the ECM is at fault.

Engine Cranks But Will Not Run

Caution: Use only electrically insulated pliers when handling ignition wires with the engine running to prevent an electrical shock.

Caution: Do not pinch or restrict nylon fuel lines. Damage to the lines could cause a fuel leak, resulting in possible fire or personal injury.

Important: If a no start condition exists, ensure the fuel cutoff switch has not been tripped prior to further diagnosis.

Step	Action	Value(s)	Yes	No
1	Perform an On-Board Diagnostic (OBD) System Check. Is the system check complete?	-	Go to *Step 2*	Go to "On-Board Diagnostic System Check"
2	Crank the engine. Does the engine start and continue to run?	-	System OK	Go to *Step 3*
3	Perform a cylinder compression test. Is the cylinder compression for all of the cylinders at or above the value specified?	689 kPa (100 psi)	Go to *Step 7*	Go to *Step 4*
4	Inspect the timing belt alignment. Is the timing belt in alignment?	-	Go to *Step 6*	Go to *Step 5*
5	Align or replace the timing belt as needed. Is the repair complete?	-	Go to *Step 2*	-
6	Repair the internal engine damage as needed. Is the repair complete?	-	Go to *Step 2*	-
7	Inspect the fuel pump fuse. Is the problem found?	-	Go to *Step 8*	Go to *Step 9*
8	Replace the fuse. Is the repair complete?	-	Go to *Step 2*	-
9	Check for the presence of spark from all of the ignition wires while cranking the engine. Is spark present from all of the ignition wires?	-	Go to *Step 34*	Go to *Step 10*
10	1. Measure the resistance of the ignition wires. 2. Replace any of the ignition wire(s) with a resistance above the value specified. 3. Check for the presence of spark from all of the ignition wires. Is spark present from all of the ignition wires?	30,000 Ω	Go to *Step 2*	Go to *Step 11*

Engine Cranks But Will Not Run (Cont'd)

Step	Action	Value(s)	Yes	No
11	1. Turn the ignition OFF. 2. Disconnect the crankshaft position sensor (CPS) connector. 3. Turn the ignition ON. 4. Measure the voltage between the CPS connector terminals 1 and 3. Does the voltage measure near the value specified?	1.08 V	Go to *Step 12*	Go to *Step 13*
12	Measure the voltage between the CPS connector terminals 2 and 3. Does the voltage measure near the value specified?	1.08 V	Go to *Step 19*	Go to *Step 14*
13	Measure the voltage between the CPS connector terminal 1 and ground. Does the voltage measure near the value specified?	1.08 V	Go to *Step 15*	Go to *Step 16*
14	Measure the voltage between the CPS connector terminal 2 and ground. Does the voltage measure near the value specified?	1.08 V	Go to *Step 15*	Go to *Step 17*
15	Check for an open or short in the wire between the CPS connector terminal 3 and ground. Is the problem found?	-	Go to *Step 18*	Go to *Step 33*
16	Check for an open or short in the wire between the CPS connector terminal 1 and the engine control module (ECM) connector terminal C6. Is the problem found?	-	Go to *Step 18*	Go to *Step 33*
17	Check for an open or short in the wire between the CPS connector terminal 2 and the ECM connector terminal C5. Is the problem found?	-	Go to *Step 18*	Go to *Step 33*
18	Repair the wiring as needed. Is the repair complete?	-	Go to *Step 2*	-
19	1. Disconnect the direct ignition system (DIS) ignition coil connector to prevent the vehicle from starting. 2. Measure the voltage at the ECM connector terminal C6 by backprobing the ECM connector. Are the voltage readings near the values specified?	1.08 V with ignition ON, 1.20 V during cranking	Go to *Step 20*	Go to *Step 21*
20	Measure the voltage at the ECM connector terminal C5 by backprobing the ECM connector. Are the voltage readings near the values specified?	1.08 V with ignition ON, 1.20 V during cranking	Go to Step 22	Go to *Step 21*
21	Replace the CPS. Is the repair complete?	-	Go to *Step 2*	-
22	1. Turn the ignition OFF. 2. Disconnect the electrical connector at the DIS ignition coil. 3. Connect a test light between terminal D of the DIS ignition coil connector and ground. 4. Turn the ignition ON. Is the test light on?	-	Go to *Step 23*	Go to *Step 24*

Engine Cranks But Will Not Run (Cont'd)

Step	Action	Value(s)	Yes	No
23	Connect a test light between terminal C of the DIS ignition coil connector and battery positive. Is the test light on?	-	Go to *Step 27*	Go to *Step 25*
24	Check for an open in the wiring between the battery and the DIS ignition coil connector terminal D. Is the problem found?	-	Go to *Step 26*	Go to "Ignition 1 Relay Circuit Check"
25	Check for an open in the wire from the DIS ignition coil to ground. Is the problem found?	-	Go to *Step 26*	-
26	1. Repair the wiring as needed. 2. Connect the DIS ignition coil connector. 3. Check for the presence of spark from all of the ignition wires. Is spark present from all of the ignition wires?	-	Go to *Step 2*	Go to *Step 27*
27	1. Turn the ignition OFF. 2. Disconnect the DIS ignition coil connector. 3. While cranking the engine, measure the voltage at the DIS ignition coil connector terminal B. Does the voltage fluctuate within the values specified?	0.2-2.0 V	Go to *Step 28*	Go to *Step 29*
28	While cranking the engine, measure the voltage at the DIS ignition coil connector terminal A. Does the voltage fluctuate within the values specified?	0.2-2.0 V	Go to *Step 32*	Go to *Step 30*
29	Check for an open in the wire from the DIS ignition coil connector terminal B to the ECM connector terminal C4. Is the problem found?	-	Go to *Step 31*	Go to *Step 33*
30	Check for an open in the wire from the DIS ignition coil connector terminal A to the ECM connector terminal D5. Is the problem found?	-	Go to *Step 31*	Go to *Step 33*
31	1. Repair the wiring as needed. 2. Connect the DIS ignition coil connector. 3. Check for the presence of spark from all of the ignition wires. Is spark present from all of the ignition wires?	-	Go to *Step 2*	Go to *Step 32*
32	Replace the DIS ignition coil. Is the repair complete?	-	Go to *Step 2*	-
33	Replace the ECM. Is the repair complete?	-	Go to *Step 2*	-
34	1. Turn the ignition OFF. 2. Connect a fuel pressure gauge. 3. Crank the engine. Is any fuel pressure present?	-	Go to *Step 37*	Go to *Step 35*

Engine Cranks But Will Not Run (Cont'd)

Step	Action	Value(s)	Yes	No
35	1. Turn the ignition OFF. 2. Disconnect the electrical connector at the fuel pump. 3. Connect a test light between the fuel pump connector terminals 3 and 2. 4. Turn the ignition ON. 5. With the ignition ON, the test light should light for the time specified. Is the test light on?	2 sec	Go to *Step 36*	Go to *Step 46*
36	Replace the fuel pump. Is the repair complete?	-	Go to *Step 2*	-
37	Is the fuel pressure within the value specified?	283-324 kPa (41-47 psi)	Go to *Step 41*	Go to *Step 38*
38	1. Check the fuel filter for a restriction. 2. Inspect the fuel lines for kinks and restrictions. Is the problem found?	-	Go to *Step 39*	Go to *Step 40*
39	1. Replace the fuel filter and/or the fuel lines as needed. 2. Connect a fuel pressure gauge. 3. Crank the engine. Is the fuel pressure within the value specified?	283-324 kPa (41-47 psi)	Go to *Step 2*	Go to *Step 40*
40	1. Disconnect the vacuum line from the fuel pressure regulator. 2. Inspect the vacuum line for the presence of fuel. 3. Inspect the fuel pressure regulator vacuum port for the presence of fuel. Is any fuel present?	-	Go to *Step 43*	Go to *Step 44*
41	Check the fuel for contamination. Is the fuel contaminated?	-	Go to *Step 42*	Go to *Step 64*
42	1. Remove the contaminated fuel from the fuel tank. 2. Clean the fuel tank as needed. Is the repair complete?	-	Go to *Step 2*	-
43	Replace the fuel pressure regulator. Is the repair complete?	-	Go to *Step 2*	-
44	1. Remove the fuel pump assembly from the fuel tank. 2. Inspect the fuel pump sender and the fuel coupling hoses for a restriction. 3. Inspect the intank fuel filter for a restriction. Is the problem found?	-	Go to *Step 45*	Go to *Step 36*
45	Replace the fuel pump sender, the intank fuel filter, and/or the fuel coupling hoses as needed. Is the repair complete?	-	Go to *Step 2*	-

Engine Cranks But Will Not Run (Cont'd)

Step	Action	Value(s)	Yes	No
46	1. Turn the ignition OFF. 2. Disconnect the electrical connector at the fuel pump. 3. Connect a test light between the fuel pump connector terminal 3 and a known good ground. 4. Turn the ignition ON. 5. With the ignition ON, the test light should light for the time specified. Is the test light on?	2 sec	Go to *Step 47*	Go to *Step 48*
47	Repair the open wire between the fuel pump connector terminal 2 and ground. Is the repair complete?	-	Go to *Step 2*	-
48	1. Turn the ignition OFF. 2. Disconnect the fuel pump relay. 3. Connect a test light between the fuel pump relay connector terminal 86 and battery positive. 4. Turn the ignition ON. Is the test light on?	-	Go to *Step 49*	Go to *Step 60*
49	1. Turn the ignition OFF. 2. Connect a test light between the fuel pump relay connector terminal 85 and ground. 3. Turn the ignition ON. 4. With the ignition ON, the test light should light for the time specified. Is the test light on?	2 sec	Go to *Step 50*	Go to *Step 61*
50	1. Turn the ignition OFF. 2. Connect a test light between the fuel pump relay connector terminal 30 and ground. Is the test light on?	-	Go to *Step 51*	Go to *Step 63*
51	1. Turn the ignition ON. 2. Measure the voltage at the fuse EF19 connection. Is the voltage within the specified value?	11-14 V	Go to *Step 53*	Go to *Step 52*
52	Replace the fuel pump relay. Is the repair complete?	-	Go to *Step 2*	-
53	Measure the voltage at the fuse EF19 again. Is the voltage within the specified value	11-14 V	Go to *Step 55*	Go to *Step 54*
54	Replace the engine fuse block. Is the repair complete?	-	Go to *Step 2*	-
55	1. Disconnect the fuel cutoff switch connector. 2. Measure the voltage at terminal 1 of the fuel cutoff switch connector. Is the repair complete?	-	Go to *Step 57*	Go to *Step 56*
56	Repair the open or short between the fuel cutoff switch and fuse EF19. Is the repair complete?	-	Go to *Step 2*	-
57	1. Reconnect the fuel cutoff switch. 2. Measure the voltage at terminal 3 of the fuel cutoff switch connector. Is the voltage within the specified value?	11-14 V	Go to *Step 58*	Go to *Step 59*

Engine Cranks But Will Not Run (Cont'd)

Step	Action	Value(s)	Yes	No
58	Repair the short or opening the circuit between the fuel cutoff switch and the fuel pump. Is the repair complete?	-	Go to *Step 2*	-
59	Replace the fuel cutoff switch. Is the repair complete?	-	Go to *Step 2*	-
60	Check for an open or short to voltage in the circuit between the fuel pump relay terminal 86 and ground. Is a problem found and corrected?	-	Go to *Step 2*	Go to *Step 61*
61	Check the wire between the fuel pump relay connector terminal 85 to the ECM connector terminal E13 for an open. Is the problem found?	-	Go to *Step 62*	Go to *Step 33*
62	Repair the wire between the fuel pump relay connector terminal 85 to the ECM connector terminal E13. Is the repair complete?	-	Go to *Step 2*	-
63	Repair the wire between the fuel pump relay connector terminal 30 and the battery. Is the repair complete?	-	Go to *Step 2*	-
64	1. Turn the ignition OFF. 2. Disconnect the fuel injector harness connectors from all of the fuel injectors. 3. Turn the ignition ON. 4. Connect a test light between the fuel injector harness connector 1 and ground. 5. Repeat step 4 for each of the remaining fuel injectors. Is the test light on at all of the fuel injectors?	-	Go to *Step 65*	Go to *Step 68*
65	1. Turn the ignition OFF. 2. Connect a test light between the fuel injector harness connector terminal 2 and battery positive. 3. Crank the engine. 4. Repeat steps three and four for each of the remaining fuel injectors. Does the test light flash for all of the fuel injectors?	-	Go to *Step 66*	Go to *Step 69*
66	Measure the resistance of each fuel injector. Is the resistance within the value specified (the resistance will increase slightly at higher temperatures)?	11.6-12.4 Ω	System OK	Go to *Step 67*
67	Replace any of the fuel injectors with a resistance out of specification. Is the repair complete?	-	Go to *Step 2*	-
68	Repair the open wire(s) between the fuel injector harness connector(s) terminal 1 and the battery. Is the repair complete?	-	Go to *Step 2*	-

Engine Cranks But Will Not Run (Cont'd)

Step	Action	Value(s)	Yes	No
69	1. Check for an open between the fuel injector 1 harness connector terminal 2 and the ECM connector terminal D3. 2. Check for an open between the fuel injector 2 harness connector terminal 2 and the ECM connector terminal C1. 3. Check for an open between the fuel injector 3 harness connector terminal 2 and the ECM connector terminal D1. 4. Check for an open between the fuel injector 4 harness connector terminal 2 and the ECM connector terminal F13. Is the problem found?	-	Go to *Step 70*	Go to *Step 72*
70	Repair the open fuel injector harness wire(s). Is the repair complete?	-	Go to *Step 2*	-
71	Replace the fuse or repair the wiring as needed. Is the repair complete?	-	Go to *Step 2*	-
72	1. Inspect the engine fuse block fuse EF17. 2. Check for an open between the circuit from terminal 1 for each of the four fuel injectors and the ignition 1 relay connector terminal 87. Is the problem found?	-	Go to *Step 65*	Go to "Ignition 1 Relay Circuit Check"

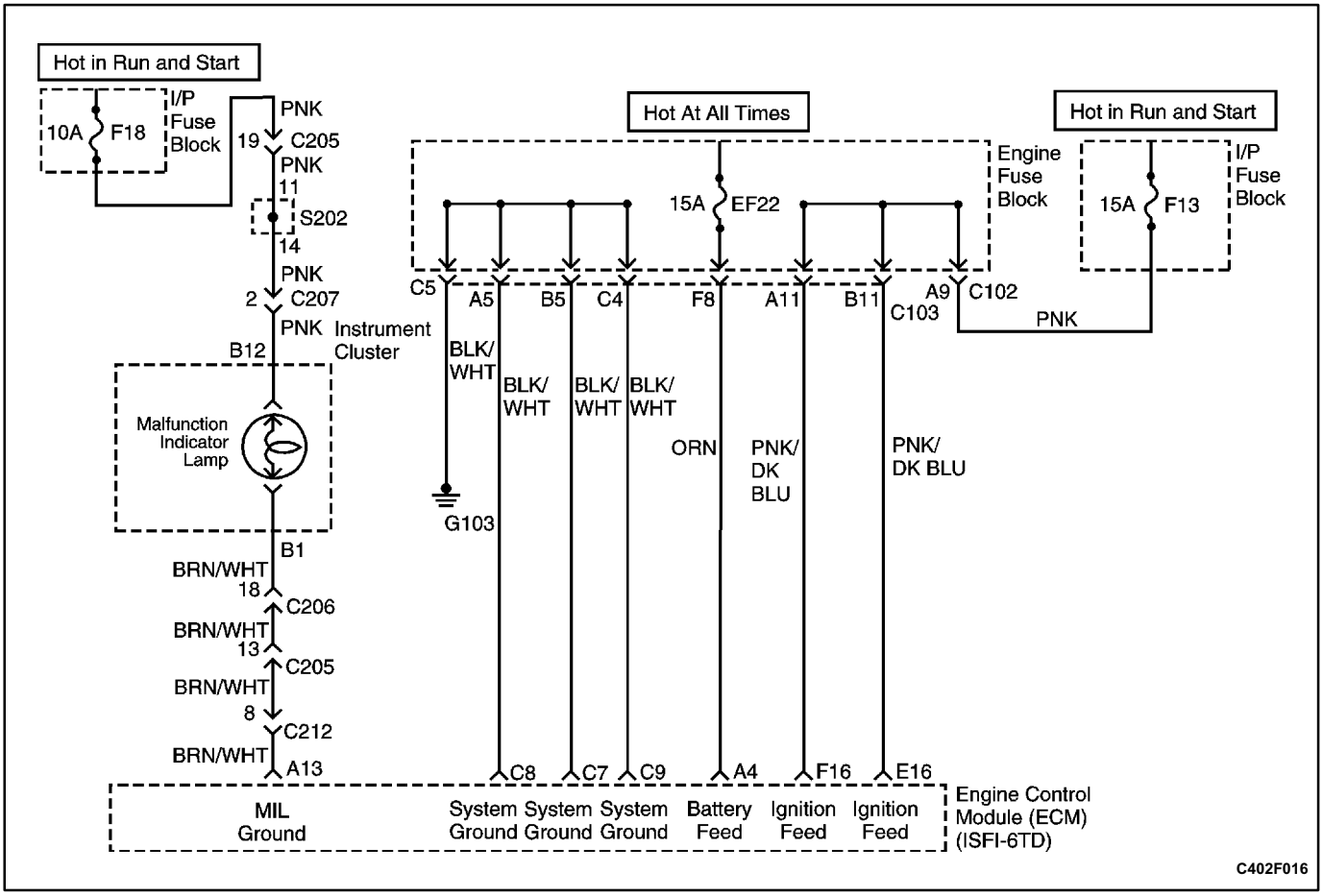

NO MALFUNCTION INDICATOR LAMP

Circuit Description

When the ignition is turned ON, the Malfunction Indicator Lamp (MIL) will momentarily flash ON then OFF and remain ON until the engine is running, if no Diagnostic Trouble Codes (DTCs) are stored. Battery voltage is supplied through the ignition switch directly to the MIL telltale. The engine control module (ECM) controls the MIL by providing a ground path through the MIL control circuit to turn ON the MIL.

Diagnostic Aids

An open ignition #5 fuse will cause the entire cluster to be inoperative, and may set DTC P1625.

Check the battery and ignition feed circuits for poor connections if the MIL is intermittent.

Any circuitry, that is suspected as causing an intermittent complaint, should be thoroughly checked for backedout terminals, improper mating, broken locks, improperly formed or damaged terminals, poor terminaltowiring connections or physical damage to the wiring harness.

Test Description

Number(s) below refer to the step number(s) on the diagnostic table.

1. The OnBoard Diagnostic (OBD) System Check prompts the technician to complete some basic checks and store the freeze frame and failure records data on then scan tool, if applicable. This creates an electronic copy of the data taken when the malfunction occurred. The information is stored in the scan tool for later reference.
3. Connections that are suspected of being faulty should be thoroughly checked as described in the diagnostic aids.
4. If the engine fails to start and the MIL is inoperative, then the fault can be isolated to either the ECM ignition feed, the battery feed, or a poor ground at the engine block or the ECM.
6. Probing the MIL circuit with a test light to ground stimulates the ECM's control of the MIL. If the MIL illuminates, then the malfunction can be isolated to the control of the MIL or a poor connection at the MIL terminal to the ECM. Connections that are suspected of being faulty should be thoroughly checked as described in the diagnostic aids.
8. It takes very little resistance for the battery and ignition feed circuits to cause an intermittent condition and should also be checked for a poor connection as described in diagnostic aids.
11. Before replacing the ECM, check for backedout terminals, improper mating, broken locks, improperly formed or damaged terminals, poor

terminal-to-wiring harness. Replacement ECMs must be reprogrammed. Refer to the latest Techline information for reprogramming procedures.

20. ECM grounds will only cause a problem if all of the grounds are not making a good connection. If an ECM ground problem is suspected, the most probable place to check is where all the grounds meet, at the engine block.
22. If not faults have been found at this point and no DTCs were set, refer to the diagnostic aids for additional checks and information.

No Malfunction Indicator Lamp

Step	Action	Value(s)	Yes	No
1	Perform an On-Board Diagnostic (OBD) System Check. Is the check complete?	-	Go to *Step 2*	Go to "On-Board Diagnostic System Check"
2	Turn the ignition switch ON with the engine OFF. Is the Malfunction Indicator Lamp (MIL) on?	-	Go to *Step 3*	Go to *Step 4*
3	Check for a poor connection at the battery feed terminal A4 or ignition feed terminal F16. Is the problem found and repaired?	-	Go to *Step 22*	Go to *Step 5*
4	Attempt to start the engine. Does the engine start?	-	Go to *Step 6*	Go to *Step 5*
5	Check for a faulty engine control module (ECM) ground connection at the engine block or ECM connector ground terminals and repair as necessary. Is the repair complete?	-	Go to *Step 22*	-
6	1. Turn the ignition OFF. 2. Disconnect the ECM connectors from the ECM. 3. Turn the ignition switch ON. Is the MIL ON?	-	Go to *Step 8*	Go to *Step 9*
7	Inspect the ignition and battery feed fuses. Are the fuses OK?	-	Go to *Step 10*	Go to *Step 11*
8	Check for a poor connection in the battery feed terminal A4, ignition feed terminal F16 or the MIL control circuits and repair as necessary. Is a repair necessary?	-	Go to *Step 22*	Go to *Step 12*
9	Probe the MIL control circuit with a test light connected to ground. Is the test light illuminated?	-	Go to *Step 13*	Go to *Step 14*
10	1. Turn the ignition switch OFF. 2. Disconnect the ECM connectors from the ECM. 3. Turn the ignition switch ON. 4. Probe the ignition feed terminal F16 with a test light connected to ground. Does the test light illuminate?	-	Go to *Step 15*	Go to *Step 16*
11	1. Check for a short to ground in the circuit of the fuse that was open and repair if necessary. 2. Replace the open fuse. Is the repair complete?	-	Go to *Step 22*	-

No Malfunction Indicator Lamp (Cont'd)

Step	Action	Value(s)	Yes	No
12	Replace the ECM. Is the repair complete?	-	Go to *Step 22*	-
13	Repair the short to voltage in the MIL control circuit. Is the repair complete?	-	Go to *Step 22*	-
14	Check for an open or a poor connection in the MIL control circuit and repair as necessary. Is a repair necessary?	-	Go to *Step 22*	Go to *Step 17*
15	With a test light still connected to the ground, probe the ignition feed terminal F16. Does the test light illuminate?	-	Go to *Step 18*	Go to *Step 19*
16	Repair the open battery feed circuit. Is the repair complete?	-	Go to *Step 22*	-
17	Check for an open ignition feed circuit or fuse to the MIL and repair as necessary. Is a repair necessary?	-	Go to *Step 22*	Go to *Step 20*
18	Check for a poor connection in the battery feed terminal A4 or the ignition feed terminal F16 and repair as necessary. Is a repair necessary?	-	Go to *Step 22*	Go to *Step 21*
19	Repair the open in the ignition feed circuit from terminal F16. Is the repair complete?	-	Go to *Step 22*	-
20	Replace the instrument panel cluster. Refer to *Section 9E, Instrumentation/Driver Information*. Is the repair complete?	-	Go to *Step 22*	-
21	Check for a faulty ECM ground connection at the engine block or ECM connector and repair as necessary. Is the repair necessary?	-	Go to *Step 22*	Go to *Step 12*
22	1. Allow the engine to idle until normal operating temperature is reached. 2. Check if any DTCs are set. Are any DTCs displayed that have not been diagnosed?	-	Go to the applicable DTC table	System OK

BLANK

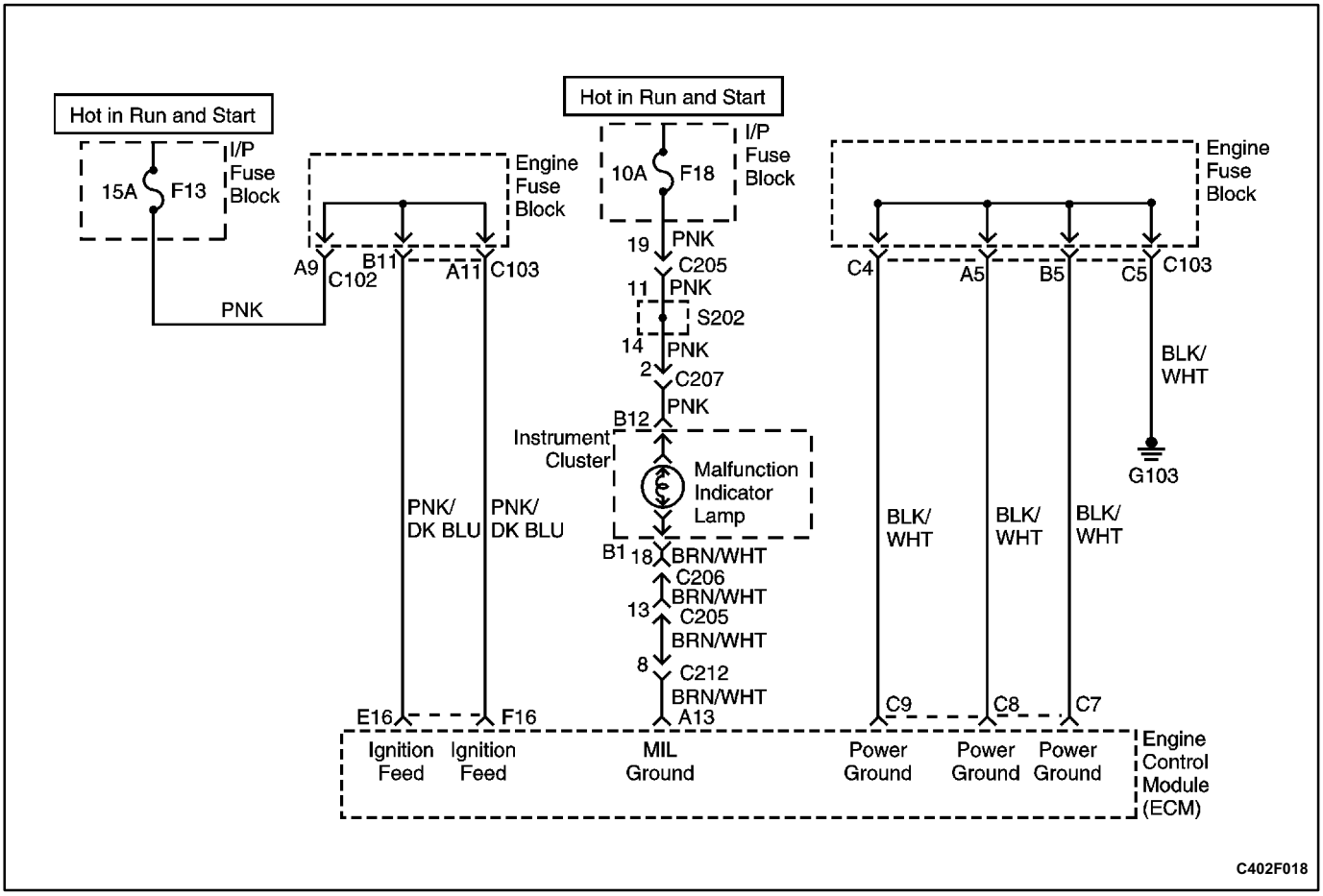

MALFUNCTION INDICATOR LAMP ON STEADY

Circuit Description

When the ignition is turned ON, the Malfunction Indicator Lamp (MIL) will momentarily flash ON then OFF and remain ON until the engine is running if no Diagnostic Trouble Codes (DTCs) are stored. Battery voltage is supplied through the ignition switch directly to the MIL telltale. The engine control module (ECM) controls the MIL by providing a ground path through the MIL control circuit to turn ON the MIL.

Test Description

Number(s) below refer to the step number(s) on the diagnostic table.

1. The OnBoard Diagnostic (OBD) System Check prompts the technician to complete some basic checks and store the freeze frame and failure records data on then scan tool, if applicable. This creates an electronic copy of the data taken when the malfunction occurred. The information is stored in the scan tool for later reference.
2. When the ignition is turned on, the MIL should momentarily flash ON and OFF then remain ON until the engine is running or if an emission related DTC is stored.
3. This step checks the ability of the ECM to control the MIL. The scan tool has the ability to command the MIL ON and OFF.
5. A shorted MIL circuit can be diagnosed with a scan tool.
7. The replacement ECM must be reprogrammed. Refer to the latest Techline information for reprogramming procedures.

Malfunction Indicator Lamp On Steady

Step	Action	Value(s)	Yes	No
1	Perform an On-Board Diagnostic (OBD) System Check. Is the check complete?	-	Go to *Step 2*	Go to "On-Board Diagnostic System Check"
2	Turn the ignition switch ON with the engine OFF. Is the Malfunction Indicator Lamp (MIL) ON?	-	Go to *Step 3*	Go to "No Malfunction Indicator Lamp"
3	1. Install the scan tool. 2. Command the MIL On and OFF. Does the MIL turn ON and OFF when commanded?	-	Go to *Step 8*	Go to *Step 4*
4	1. Turn the ignition switch OFF. 2. Disconnect the engine control module (ECM) connectors. 3. Turn the ignition switch ON. Is the MIL OFF?	-	Go to *Step 7*	Go to *Step 5*
5	Check the MIL control circuit for a short to ground and repair if necessary. Is a repair necessary?	-	Go to *Step 8*	Go to *Step 6*
6	Replace the instrument panel cluster. Refer to *Section 9E, Instrumentation/Driver Information*. Is the repair complete?	-	Go to *Step 8*	-
7	Replace the ECM. Is the repair complete?	-	Go to *Step 8*	-
8	1. Using the scan tool, clear the Diagnostic Trouble Codes (DTCs). 2. Attempt to start the engine. Does the engine start and continue to run?	-	Go to *Step 9*	Go to *Step 1*
9	1. Allow the engine to idle until normal operating temperature is reached. 2. Check if any DTCs are set. Are any DTCs displayed that have not been diagnosed?	-	Go to the applicable DTC table	System OK

FUEL SYSTEM DIAGNOSIS

Circuit Description

The fuel pump is an in-tank fuel pump mounted to a fuel sender assembly. The fuel pump will remain on as long as the engine is cranking or running and the engine control module (ECM) is receiving reference pulses from the crankshaft position sensor (CPS). If there are no reference pulses, the ECM will turn off the fuel pump two seconds after the ignition switch is turned ON or two seconds after the engine stops running. The fuel pump delivers fuel to the fuel rail and the fuel injectors, where the fuel system pressure is controlled from 284 to 325 kPa (41 to 47 psi) by the fuel pressure regulator. The excess fuel is returned to the fuel tank.

Test Description

The number(s) below refer to step(s) on the diagnostic table.

2. When the engine is idling, the intake manifold vacuum is high. This vacuum is applied to the fuel pressure regulator diaphragm, offsetting the spring pressure inside the fuel pressure regulator and lowering the fuel pressure.
10. If there is fuel bleeding back through the fuel return outlet, this is due to a faulty fuel pressure regulator.
14. Another symptom often present when the fuel injectors are leaking is hard starting. Leaking fuel injectors can cause a flooding condition.
23. Fuel leaking from the fuel pump inlet is due to a faulty one-way check valve in the fuel pump.

Caution: The fuel system is under pressure. To avoid fuel spillage and the risk of personal injury or fire, it is necessary to relieve the fuel system pressure before disconnecting the fuel lines.

Caution: Do not pinch or restrict nylon fuel lines. Damage to the lines could cause a fuel leak, resulting in possible fire or personal injury.

Fuel Pressure Relief Procedure

1. Remove the fuel cap.
2. Remove the fuel pump fuse EF19 from the engine fuse box.
3. Start the engine and allow the engine to stall.
4. Crank the engine for an additional 10 seconds.

Fuel System Diagnosis

Step	Action	Value(s)	Yes	No
1	1. Relieve the fuel system pressure. 2. Install a fuel pressure gauge. 3. Turn the ignition ON. Is the fuel pressure within the values specified and holding steady?	284-325 kPa (41-47 psi)	Go to *Step 2*	Go to *Step 5*
2	1. Disconnect the fuel pressure regulator vacuum hose. 2. Start the engine. 3. Allow the engine to idle. 4. Connect the fuel pressure regulator vacuum hose. Did the fuel pressure decrease?	-	System OK	Go to *Step 3*
3	1. Allow the engine to idle. 2. Disconnect the vacuum hose from the fuel pressure regulator. 3. Connect a vacuum pump with a gauge to the fuel pressure regulator vacuum port. 4. Apply 41-47 kPa (12-14 in. Hg) of vacuum to the fuel pressure regulator. Did the fuel pressure decrease?	-	Go to *Step 4*	Go to *Step 16*
4	1. Locate and correct the cause of the vacuum restriction to the fuel pressure regulator. 2. Confirm the operation of the fuel pressure regulator. Is the repair complete?	-	System OK	-

Fuel System Diagnosis (Cont'd)

Step	Action	Value(s)	Yes	No
5	1. Relieve the fuel system pressure. 2. Install a fuel pressure gauge. 3. Turn the ignition ON. Is the fuel pressure within the values specified but not holding steady?	284-325 kPa (41-47 psi)	Go to *Step 6*	Go to *Step 17*
6	Inspect the fuel lines for a leak. Is the problem found?	-	Go to *Step 7*	Go to *Step 8*
7	1. Replace the fuel line(s) as needed. 2. Install a fuel pressure gauge. 3. Turn the ignition ON. Is the fuel pressure within the values specified and holding steady?	284-325 kPa (41-47 psi)	System OK	-
8	1. Remove the fuel pump assembly. 2. With the fuel pump under pressure, inspect the fuel pump coupling hoses for leaking. Is the problem found?	-	Go to *Step 9*	Go to *Step 10*
9	1. Tighten or replace the fuel pump coupling hoses as needed. 2. Install a fuel pressure gauge. 3. Turn the ignition ON. Is the fuel pressure within the values specified and holding steady?	284-325 kPa (41-47 psi)	System OK	-
10	With the fuel system under pressure, inspect the fuel return outlet for leaking. Is the problem found?	-	Go to *Step 11*	Go to *Step 12*
11	1. Replace the fuel pressure regulator. 2. Install a fuel pressure gauge. 3. Turn the ignition ON. Is the fuel pressure within the values specified and holding steady?	284-325 kPa (41-47 psi)	System OK	-
12	With the fuel system under pressure, inspect the fuel inlet for leaking. Is the problem found?	-	Go to *Step 13*	Go to *Step 14*
13	1. Replace the fuel pump assembly. 2. Install a fuel pressure gauge. 3. Turn the ignition ON. Is the fuel pressure within the values specified and holding steady?	284-325 kPa (41-47 psi)	System OK	-
14	1. Remove the fuel rail and the fuel injectors as an assembly. 2. With the fuel system under pressure, inspect all of the fuel injectors for leaking. Is the problem found?	-	Go to *Step 15*	-
15	1. Replace the leaking fuel injector(s). 2. Install a fuel pressure gauge. 3. Turn the ignition ON. Is the fuel pressure within the values specified and holding steady?	284-325 kPa (41-47 psi)	System OK	-

Fuel System Diagnosis (Cont'd)

Step	Action	Value(s)	Yes	No
16	1. Replace the fuel pressure regulator. 2. Disconnect the fuel pressure regulator vacuum hose. 3. Start the engine. 4. Allow the engine to idle. 5. Connect the fuel pressure regulator vacuum hose. Did the fuel pressure decrease?	-	System OK	-
17	1. Relieve the fuel system pressure. 2. Install a fuel pressure gauge. 3. Turn the ignition ON. Is the fuel system pressure below the values speci□ fied and holding steady?	284-325 kPa (41-47 psi)	Go to *Step 13*	Go to *Step 18*
18	1. Relieve the fuel system pressure. 2. Install a fuel pressure gauge. 3. Turn the ignition ON. Is the fuel system pressure below the values speci□ fied and not holding steady?	284-325 kPa (41-47 psi)	Go to *Step 19*	-
19	Inspect the fuel lines for leaks. Is the problem found?	-	Go to *Step 7*	Go to *Step 20*
20	1. Remove the fuel pump assembly. 2. With the fuel pump under pressure, inspect the fuel pump coupling hoses for leaking. Is the problem found?	-	Go to *Step 9*	Go to *Step 21*
21	1. Remove the fuel pump assembly. 2. With the fuel system under pressure, inspect the fuel return outlet for leaking. Is the problem found?	-	Go to *Step 11*	Go to *Step 22*
22	1. Remove the fuel pump assembly. 2. With the fuel system under pressure, inspect the fuel inlet for leaking. Is the problem found?	-	Go to *Step 13*	Go to *Step 23*
23	1. Remove the fuel rail and the fuel injectors as an assembly. 2. With the fuel system under pressure, inspect all of the fuel injectors for leaking. Is the problem found?	-	Go to *Step 15*	Go to *Step 13*

BLANK

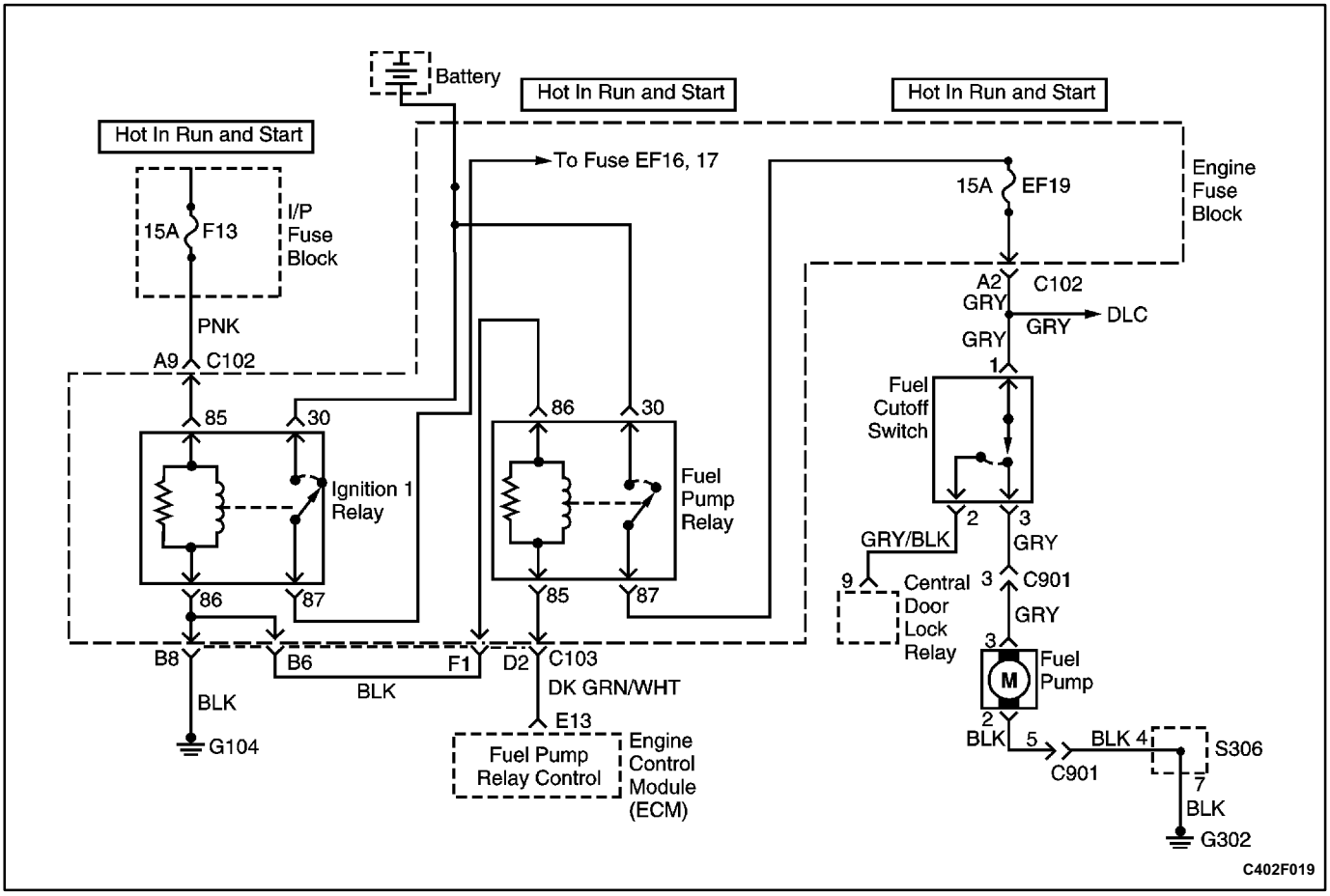

FUEL PUMP RELAY CIRCUIT CHECK

Circuit Description

When the ignition switch is turned ON, the engine control module (ECM) will activate the fuel pump relay and run the in-tank fuel pump. The fuel pump will operate as long as the engine is cranking or running and the ECM is receiving ignition reference pulses.

If there are no reference pulses, the ECM will shut off the fuel pump within 2 seconds after the ignition switch is turned ON.

Diagnostic Aids

An intermittent problem may be caused by a poor connection, rubbed through wire insulation, or a broken wire inside the insulation.

Test Description

The number(s) below refer to step(s) on the diagnostic table.

3. This step checks for the engine control module (ECM) providing a ground for the operation of the fuel pump relay.
7. By confirming that the wiring is OK using steps 2 through 6, it can be determined that the fuel pump relay is at fault.
9. After determining that there is no ground being provided by the ECM to the fuel pump relay, the fault is either the ECM or the wiring between the ECM and the fuel pump relay.

Fuel Pump Relay Circuit Check

Step	Action	Value(s)	Yes	No
1	1. Turn the ignition OFF for 10 seconds. 2. Turn the ignition ON. 3. Listen for intank fuel pump operation. Does the fuel pump operate for the time specified?	2 sec	System OK	Go to *Step 2*
2	1. Turn the ignition OFF. 2. Disconnect the fuel pump relay. 3. Connect a test light between the fuel pump relay connector terminal 86 and battery positive. 4. Turn the ignition ON. Is the test light on?	-	Go to *Step 3*	Go to *Step 8*
3	1. Turn the ignition OFF. 2. Connect a test light between the fuel pump relay connector terminal 85 and ground. 3. Turn the ignition ON. 4. With the ignition ON, the test light should light for the time specified. Is the test light on?	2 sec	Go to *Step 4*	Go to *Step 9*
4	1. Turn the ignition OFF. 2. Connect a test light between the fuel pump relay connector terminal 30 and ground. Is the test light on?	-	Go to *Step 5*	Go to *Step 11*
5	Check for an open or short to ground in the wire between the fuel pump relay connector terminal 87 and the fuel cutoff switch terminal 1. Is the problem found?	-	Go to *Step 6*	Go to *Step 7*
6	1. Repair the wire between the fuel pump relay connector terminal 87 and the fuel cutoff switch terminal 1. 2. Install the fuel pump relay. 3. Turn the ignition OFF for 10 seconds. 4. Turn the ignition ON. Does the fuel pump operate for the time specified?	2 sec	System OK	-
7	1. Replace the fuel pump relay. 2. Turn the ignition OFF for 10 seconds. 3. Turn the ignition ON. Does the fuel pump operate for the time specified?	2 sec	System OK	-
8	Check for an open wire between the fuel pump relay connector terminal 86 and the ignition 1 relay con nector terminal 86. Is the problem found?	-	Go to *Step 13*	Go to "Ignition 1 Relay Circuit Check"
9	Check for an open wire between the fuel pump relay connector terminal 85 to the engine control module (ECM) connector terminal E13. Is the problem found?	-	Go to *Step 10*	Go to *Step 12*
10	1. Repair the wire between the fuel pump relay connector terminal 85 to the ECM connector terminal E13. 2. Install the fuel pump relay. 3. Turn the ignition OFF for 10 seconds. 4. Turn the ignition ON. Does the fuel pump operate for the time specified?	2 sec	System OK	-

Fuel Pump Relay Circuit Check (Cont'd)

Step	Action	Value(s)	Yes	No
11	1. Repair the wire between the fuel pump relay connector terminal 30 and the battery. 2. Install the fuel pump relay. 3. Turn the ignition OFF for 10 seconds. 4. Turn the ignition ON. Does the fuel pump operate for the time specified?	2 sec	System OK	-
12	1. Replace the ECM. 2. Turn the ignition OFF for 10 seconds. 3. Turn the ignition ON. Does the fuel pump operate for the time specified?	2 sec	System OK	-
13	Repair the wire between the fuel pump relay connector terminal 86 and the ignition 1 relay connector terminal 86. Is the repair complete?	-	System OK	-

BLANK

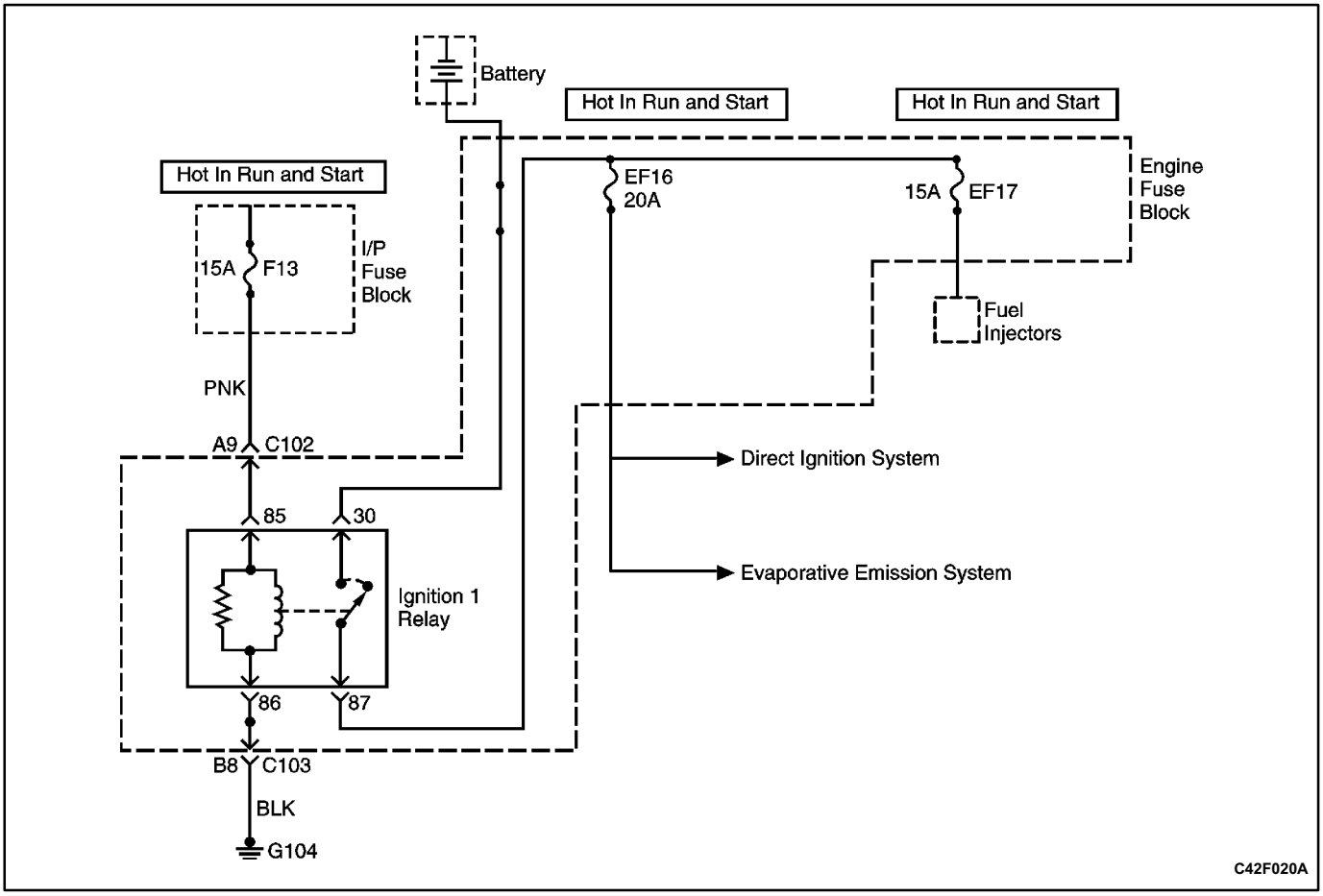

IGNITION 1 RELAY CIRCUIT CHECK

Circuit Description

When the ignition is turned ON or to the START position, the ignition 1 relay is energized. The ignition 1 relay then supplies voltage to the engine fuse box fuse EF16 and the engine fuse box fuse EF17. The direct ignition system (DIS) ignition coil, and the evaporative emission canister purge solenoid are supplied voltage through the engine fuse box fuse EF16. The fuel injectors are supplied voltage through the engine fuse box fuse EF17.

Diagnostic Aids

- An intermittent problem may be caused by a poor connection, rubbed through wire insulation, or a broken wire inside the insulation.
- A faulty ignition 1 relay will cause a no start condition. There will be no voltage supplied to the DIS ignition coil, or the fuel injectors. Without voltage supplied to these components, they will not operate.

Test Description

The number(s) below refer to specific step(s) on the diagnostic table.

1. If the test light is on at both of the fuse terminals, the ignition 1 relay is OK.
5. This step, along with steps 6, 7, and 8, checks for correct voltage and ground to the ignition 1 relay terminals.
14. After confirming correct voltage and ground to the ignition 1 relay terminals, it can be determined that the ignition 1 relay is faulty.

Ignition 1 Relay Circuit Check

Step	Action	Value(s)	Yes	No
1	1. Turn the ignition OFF. 2. Disconnect the engine fuse block fuses EF16 and EF17. 3. Turn the ignition ON. 4. With a test light connected to ground, probe the fuse terminals nearest the ignition 1 relay for fuses EF16 and EF17. Is the test light on at both terminals?	-	System OK	Go to *Step 2*
2	Check the test light. Is the test light on at only one terminal?	-	Go to *Step 9*	Go to *Step 3*
3	Check the test light. Is the test light off at both terminals?	-	Go to *Step 4*	-
4	1. Turn the ignition OFF. 2. Inspect the instrument panel fuse block fuse F13. Is the fuse OK?	-	Go to *Step 5*	Go to *Step 10*
5	1. Disconnect the ignition 1 relay. 2. Connect a test light between the ignition 1 relay connector terminal 85 and ground. 3. Turn the ignition ON. Is the test light on?	-	Go to *Step 6*	Go to *Step 11*
6	Connect a test light between the ignition 1 relay connector terminal 86 and battery voltage. Is the test light on?	-	Go to *Step 7*	Go to *Step 12*
7	Connect a test light between the ignition 1 relay connector terminal 30 and ground. Is the test light on?	-	Go to *Step 8*	Go to *Step 13*
8	Check for an open in the wiring between the ignition 1 relay connector terminal 87 and the engine fuse block terminals for fuses EF16 and EF17. Is the problem found?	-	Go to *Step 9*	Go to *Step 14*
9	Repair the open in the wiring between the ignition 1 relay connector terminal 87 and the engine fuse block terminal(s) for fuses EF16 and EF17. Is the repair complete?	-	System OK	-
10	Replace the instrument panel fuse block fuse F13. Is the repair complete?	-	System OK	-
11	Repair the open in the wiring between the ignition 1 relay connector terminal 85 and the ignition switch. Is the repair complete?	-	System OK	-
12	Repair the open in the wiring between the ignition 1 relay connector terminal 86 and ground. Is the repair complete?	-	System OK	-
13	Repair the open in the wiring between the ignition 1 relay connector terminal 30 and the battery. Is the repair complete?	-	System OK	-
14	Replace the ignition 1 relay. Is the repair complete?	-	System OK	-

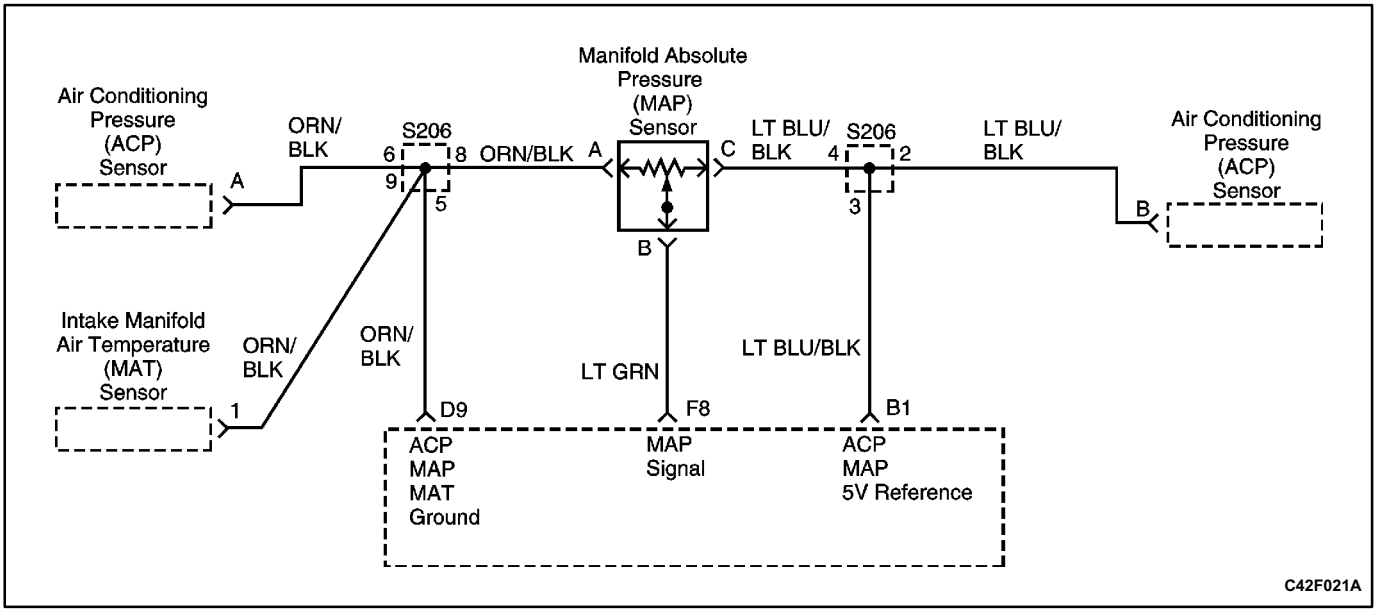

MANIFOLD ABSOLUTE PRESSURE CHECK

Circuit Description

The manifold absolute pressure (MAP) sensor measures the changes in the intake manifold pressure which result from engine load (intake manifold vacuum) and rpm changes. The MAP sensor converts these changes into a voltage output. The engine control module (ECM) sends a 5 volt reference voltage to the MAP sensor. As the intake manifold pressure changes, the output voltage of the MAP sensor also changes. A low voltage (high vacuum) output of 1 to 2 volts is present at idle. A high voltage (low vacuum) output of 4.0 to 4.8 volts is present at wide open throttle. The MAP sensor is also used under certain conditions to measure barometric pressure. This allows the ECM to make adjustments for altitude changes. The ECM uses the MAP sensor for fuel delivery and ignition timing changes.

Test Description

The number(s) below refer to step(s) on the diagnostic table.

2. Applying 34 kPa (10 inches Hg) of vacuum to the manifold absolute pressure (MAP) sensor should cause the voltage to change. Subtract the second voltage reading from the first. That voltage value should be more than 1.5 volts. When applying vacuum to the MAP sensor, the change in the voltage should happen instantly. A slow voltage change indicates a faulty MAP sensor.
3. Disconnect the MAP sensor from the bracket and twist the MAP sensor. Output changes more than 0.1 volt indicate a faulty connector or connection.

Manifold Absolute Pressure Check

Step	Action	Value(s)	Yes	No
1	1. Turn the ignition OFF. 2. Connect a scan tool to the data link connector (DLC). 3. Turn the ignition ON. 4. Compare the manifold absolute pressure (MAP) sensor voltage reading from the scanner with that from a known good vehicle. Is the difference in the two voltage readings less than the value specified?	0.4 V	Go to *Step 2*	Go to *Step 5*
2	1. Turn the ignition OFF. 2. Connect a scan tool to the DLC. 3. Disconnect the MAP sensor vacuum line. 4. Connect a hand vacuum pump to the MAP sensor. 5. Turn the ignition ON. 6. Note the MAP sensor voltage. 7. Apply 34 kPa (10 in. Hg) of vacuum to the MAP sensor and note the voltage change. Is the difference in voltage readings more than the value specified?	1.5 V	System OK	Go to *Step 3*
3	Inspect the MAP sensor connector terminals. Is the problem found?	-	Go to *Step 4*	Go to *Step 5*
4	Repair the MAP sensor connector terminals as needed. Is the repair complete?	-	System OK	-
5	Replace the manifold absolute pressure sensor. Is the repair complete?	-	System OK	-

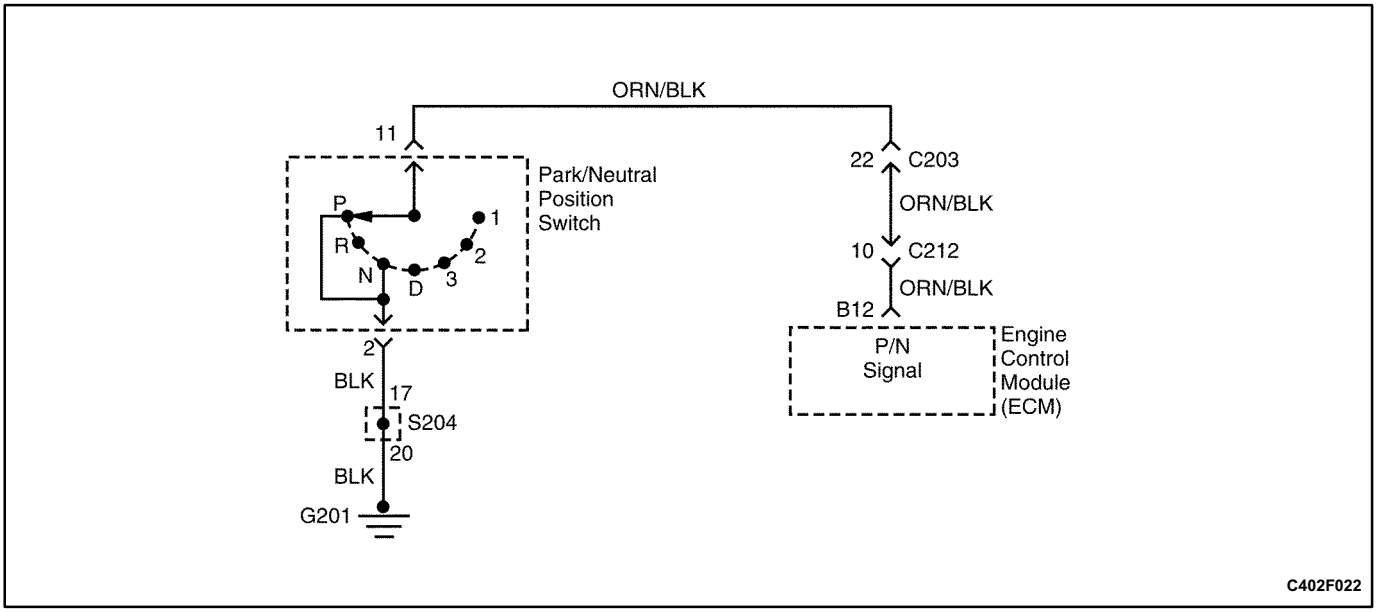

PARK/NEUTRAL POSITION SWITCH

Circuit Description

The park/neutral position (PNP) switch contacts are a part of the selector position switch. The contacts are closed to ground in park and neutral and open in the drive ranges.

The engine control module (ECM) supplies ignition voltage through a current limiting resistor to the signal wire and senses a closed switch when the voltage on the signal wire drops to less than 1 volt. The ECM uses the PNP signal as one of the inputs to control idle air and spark timing.

Test Description

The number(s) below refer to step(s) on the diagnostic table.

1. Checks for the park/neutral position (PNP) switch closed to ground in the park position. Different makes of scan tools will read park/neutral differently. Refer to the tool operations manual for the type of display used.
2. Checks for an open PNP switch in the drive range.

Park/Neutral Position Switch

Step	Action	Value(s)	Yes	No
1	1. Connect a scan tool to the data link connector (DLC). 2. Place the transaxle in P (Park). 3. Turn the ignition ON. Does the scan tool indicate park or neutral?	-	Go to *Step 2*	Go to *Step 10*
2	Place the transaxle in D (Drive). Does the scan tool indicate drive?	-	System OK	Go to *Step 3*
3	Disconnect the park/neutral position (PNP) switch. Does the scan tool indicate drive?	-	Go to *Step 4*	Go to *Step 7*
4	Check the PNP switch adjustment. Is the problem found?	-	Go to *Step 5*	Go to *Step 6*
5	Adjust the PNP switch. Is the repair complete?	-	System OK	-
6	Replace the PNP switch. Is the repair complete?	-	System OK	-
7	Check for an open or short to ground in the wire between the PNP switch connector terminal 11 and the engine control module (ECM) connector terminal B12. Is the problem found?	-	Go to *Step 8*	Go to *Step 9*
8	Repair the open or short to ground in the wire between the PNP switch connector terminal 11 and the ECM connector terminal B12. Is the repair complete?	-	System OK	-
9	Replace the ECM. Is the repair complete?	-	System OK	-
10	1. Disconnect the PNP switch. 2. Jumper the PNP switch connector terminals 11 and 2. 3. Turn the ignition ON. Does the scan tool indicate park?	-	Go to *Step 4*	Go to *Step 11*
11	Jumper the PNP switch connector terminal 11 to ground. Does the scan tool indicate park?	-	Go to *Step 12*	Go to *Step 7*
12	Repair the open wire between the PNP switch connector terminal 2 and ground. Is the repair complete?	-	System OK	-

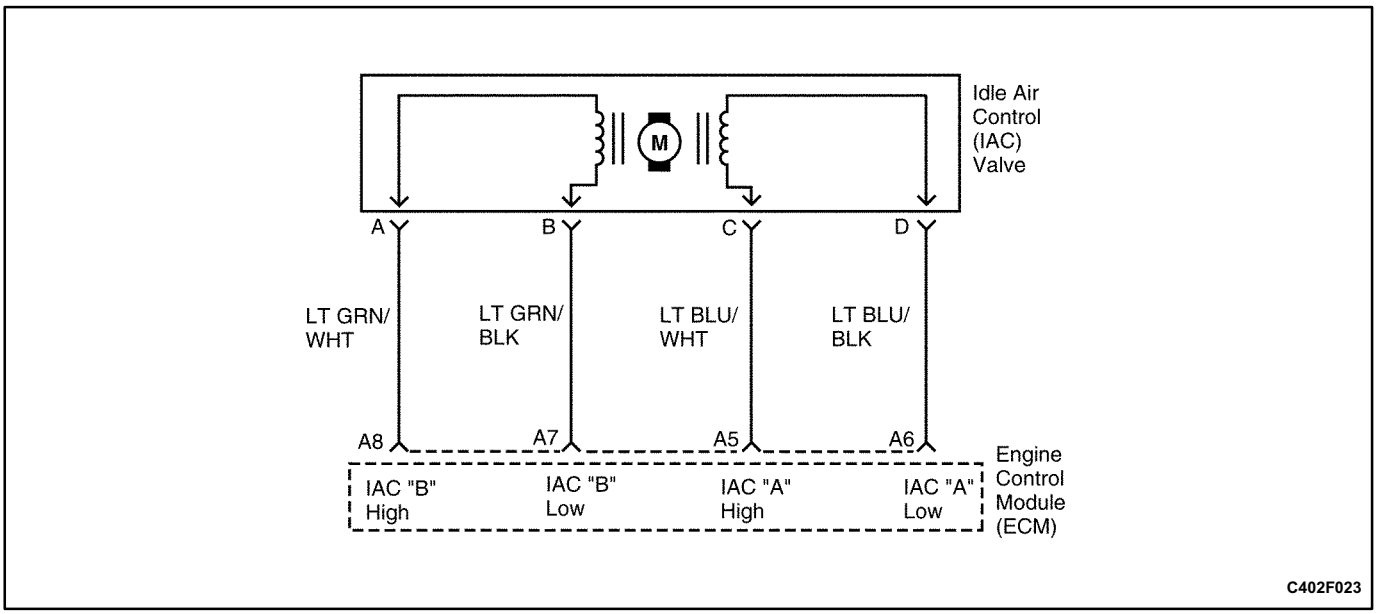

IDLE AIR CONTROL SYSTEM CHECK

Circuit Description

The engine control module (ECM) controls the engine idle speed with the idle air control (IAC) valve. To increase the idle speed, the ECM pulls the IAC pintle away from its seat, allowing more air to pass by the throttle bore. To decrease the idle speed, it extends the IAC valve pintle toward its seat, reducing bypass air flow. A scan tool will read the ECM commands to the IAC valve in counts. The higher counts indicate more air bypass (higher idle). The lower counts indicate less air is allowed to bypass (lower idle).

Diagnostic Aids

If the idle is too high, stop the engine. Fully extend the idle air control (IAC) valve with a IAC tester. Start the engine. If the idle speed is above 800 rpm, locate and repair the vacuum leak. Also, check for a binding throttle plate or throttle linkage or an incorrect base idle setting.

Test Description

The number(s) below refer to step(s) on the diagnostic table.

2. The idle air control (IAC) valve is extended and retracted by the IAC driver. IAC valve movement is verified by an engine speed change. If no change in engine speed occurs, the valve can be removed from the throttle body and tested. Connect the IAC driver to the removed IAC valve and turn the ignition ON. Do not start the engine.
5. This step checks the quality of the IAC valve movement in step 2. Fully extending the IAC valve may cause an engine stall. This may be normal.
6. Steps 2 and 5 verify proper IAC valve operation. This step checks the IAC circuit for a wiring or engine control module (ECM) fault.

Idle Air Control Valve Reset Procedure

Whenever the battery cable or the engine control module (ECM) connector or the ECM fuse EF22 is disconnected or replaced, the following idle learn procedure must be performed:

1. Turn the ignition ON for 5 seconds.
2. Turn the ignition OFF for 10 seconds.
3. Turn the ignition ON for 5 seconds.
4. Start the engine in park/neutral.
5. Allow the engine to run until the engine coolant is above 85°C (185°F).
6. Turn the A/C ON for 10 seconds, if equipped.
7. Turn the A/C OFF for 10 seconds, if equipped.
8. If the vehicle is equipped with an automatic transaxle, apply the parking brake. While pressing the brake pedal, place the transaxle in D (drive).
9. Turn the A/C ON for 10 seconds, if equipped.
10. Turn the A/C OFF for 10 seconds, if equipped.
11. Turn the ignition OFF. The idle learn procedure is complete.

Idle Air Control System Check

Step	Action	Value(s)	Yes	No
1	Perform an On-Board Diagnostic (OBD) System Check. Was the check performed?	-	Go to *Step 2*	Go to "On-Board Diagnostic System Check"
2	1. Turn the ignition OFF. 2. Connect the idle air control driver to the idle air control (IAC) valve. 3. Connect a scan tool to the data link connector (DLC). 4. Start the engine. 5. With the IAC driver, extend and retract the IAC valve. Engine rpm should increase and decrease as the IAC valve is cycled. Does the engine rpm change?	-	Go to *Step 5*	Go to *Step 3*
3	1. Remove the IAC valve. 2. Inspect the IAC passages for restrictions. Is the problem found?	-	Go to *Step 4*	Go to *Step 19*
4	Clean the IAC passages. Is the repair complete?	-	System OK	-
5	1. Turn the ignition OFF. 2. Start the engine. 3. Using the IAC driver, extend and retract the IAC valve. Engine rpm should increase and decrease as the IAC valve is cycled. Does the rpm change smoothly within the value specified with each flash of the IAC driver?	700-1500 rpm	Go to *Step 6*	Go to *Step 3*
6	1. Turn the ignition OFF. 2. Connect the IAC driver to the IAC valve. 3. Install an IAC node light to the IAC valve connector. 4. Start the engine. 5. Cycle the IAC driver. 6. Watch the node lights of the IAC driver. Do both lights cycle red and green but never off as the rpm is changed?	-	Go to *Step 7*	Go to *Step 9*
7	1. Measure the resistance of the IAC valve between terminals A and B. 2. Measure the resistance of the IAC valve between terminals C and D. Does the resistance measure within the value specified?	40-80 Ω	Go to *Step 8*	Go to *Step 19*
8	1. Measure the resistance of the IAC valve between terminals B and C. 2. Measure the resistance of the IAC valve between terminals A and D. Does the ohmmeter show the specified value?	∞	Go to "Diagnostic Aids"	Go to *Step 19*
9	Inspect the IAC connector terminals. Is the problem found?	-	Go to *Step 10*	Go to *Step 11*
10	Repair or replace the IAC connector terminals as needed. Is the repair complete?	-	System OK	-

Idle Air Control System Check (Cont'd)

Step	Action	Value(s)	Yes	No
11	Check for an open or short in the wire between the IAC connector terminal A and the engine control module (ECM) connector terminal A8. Is the problem found?	-	Go to *Step 15*	Go to *Step 12*
12	Check for an open or short in the wire between the IAC connector terminal B and the ECM connector terminal A7. Is the problem found?	-	Go to *Step 15*	Go to *Step 13*
13	Check for an open or short in the wire between the IAC connector terminal C and the ECM connector terminal A5. Is the problem found?	-	Go to *Step 15*	Go to *Step 14*
14	Check for an open or short in the wire between the IAC connector terminal D and the ECM connector terminal A6. Is the problem found?	-	Go to *Step 15*	Go to *Step 16*
15	Repair the wire as needed. Is the repair complete?	-	System OK	-
16	Inspect the ECM connector terminals. Is the problem found?	-	Go to *Step 17*	Go to *Step 18*
17	Repair the ECM connector terminals as needed. Is the repair complete?	-	System OK	-
18	Replace the ECM. Is the repair complete?	-	System OK	-
19	Replace the idle air control valve. Is the repair complete?	-	System OK	-

BLANK

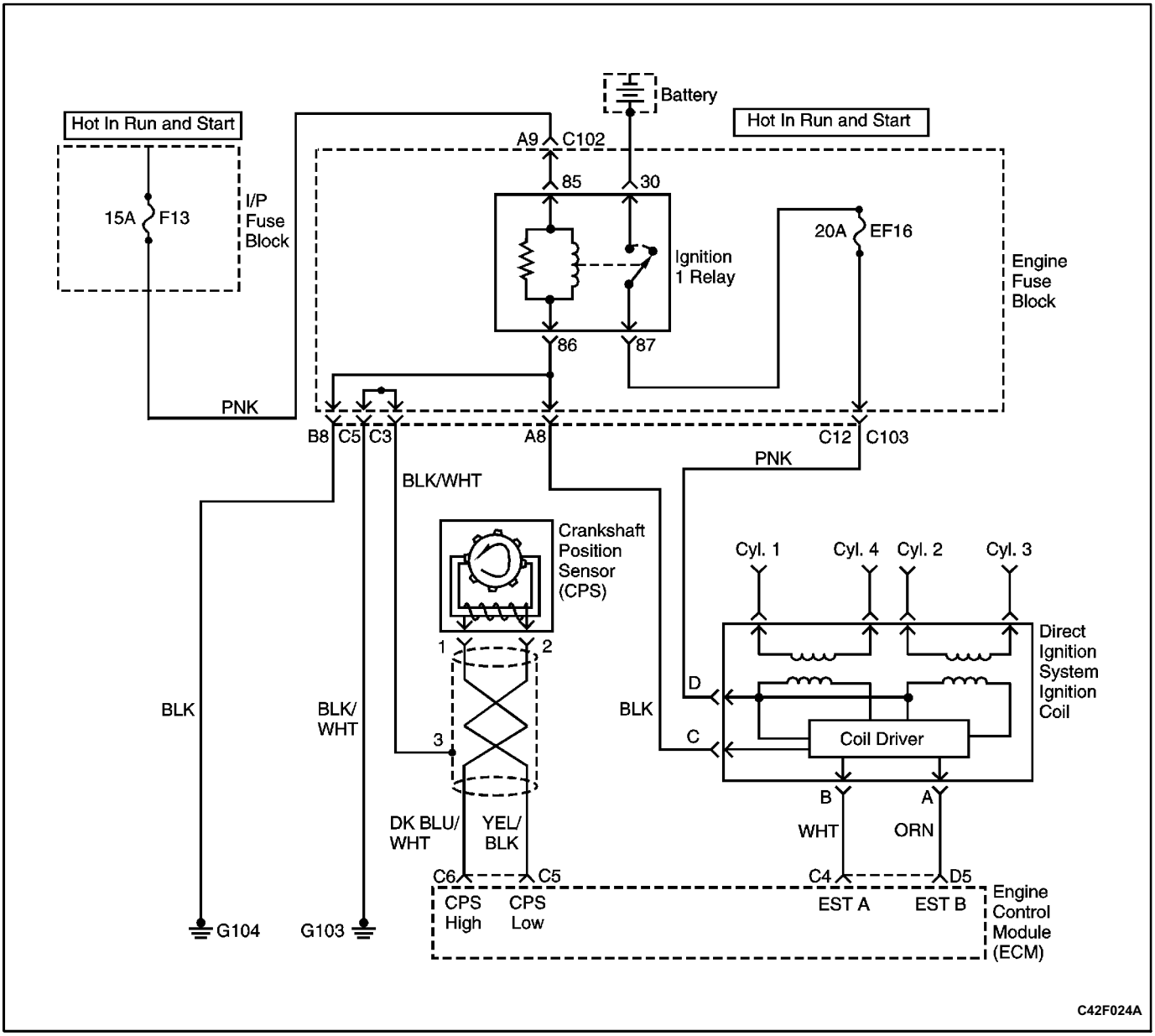

IGNITION SYSTEM CHECK

Circuit Description

The direct ignition system (DIS) uses a waste spark method of spark distribution. In this type of DIS system, the crankshaft position sensor (CPS) is mounted to the oil pump near a slotted wheel that is a part of the crankshaft pulley. The CPS sends reference pulses to the engine control module (ECM). The ECM then triggers the DIS ignition coil. Once the ECM triggers the DIS ignition coil, both of the connected spark plugs fire at the same time. One cylinder is on its compression stroke at the same time that the other is on the exhaust stroke, resulting in lower energy needed to fire the spark plug in the cylinder on its exhaust stroke. This leaves the remainder of the high voltage to be used to fire the spark plug in the cylinder on its compression stroke. Since the CPS is in a fixed position, timing adjustments are not possible or needed.

Test Description

The number(s) below refer to step(s) on the diagnostic table.

2. It is important to check for the presence of spark to all of the cylinders to isolate the problem to either direct ignition system (DIS) ignition coil inputs or outputs.

5. In checking the engine control module (ECM) outputs for the electronic spark timing signal, it recommended to use an oscilloscope to view the varying voltage signals. In measuring these outputs with a voltmeter, intermittent errors may occur that cannot be seen by a voltmeter.
6. After confirming ECM inputs for the electronic spark timing to the DIS ignition coil are OK, it can be determined that a faulty DIS ignition coil is at fault.
11. After confirming proper crankshaft position sensor inputs to the ECM and no wiring problems present, it can be determined that the ECM is at fault.
24. This step, along with step 25, checks for battery voltage and a ground to the DIS ignition coil.
26. If the wiring between the DIS ignition coil and the ignition 1 relay connector terminal 87 is OK, the problem is in the ignition 1 relay circuit.

Ignition System Check

Caution: Use only electrically insulated pliers when handling ignition wires with the engine running to prevent an electrical shock.

Step	Action	Value(s)	Yes	No
1	1. Remove the spark plugs. 2. Inspect for wet spark plugs, cracks, wear, improper gap, burned electrodes, or heavy deposits. 3. Replace the spark plugs as needed. Is the repair complete?	-	System OK	Go to *Step 2*
2	Check for the presence of spark from all of the igni□ tion wires while cranking the engine. Is spark present from all of the ignition wires?	-	System OK	Go to *Step 3*
3	1. Measure the resistance of the ignition wires. 2. Replace any ignition wire(s) with a resistance above the value specified. 3. Check for the presence of spark from all of the ignition wires. Is spark present from all of the ignition wires?	30,000 Ω	System OK	Go to *Step 4*
4	Is spark present from at least one of the ignition wires, but not all of the ignition wires?	-	Go to *Step 5*	Go to *Step 12*
5	1. Turn the ignition OFF. 2. Disconnect the direct ignition system (DIS) ignition coil connector. 3. While cranking the engine, measure the voltage at the DIS ignition coil connector terminal B. Does the voltage fluctuate within the values specified?	0.2-2.0 V	Go to *Step 6*	Go to *Step 7*
6	While cranking the engine, measure the voltage at the DIS ignition coil connector terminal A. Does the voltage fluctuate within the values specified?	0.2-2.0 V	Go to *Step 10*	Go to *Step 8*
7	Check for an open in the wire from the DIS ignition coil connector terminal B to the engine control module (ECM) connector terminal C4. Is the problem found?	-	Go to *Step 9*	Go to *Step 11*
8	Check for an open in the wire from the DIS ignition coil connector terminal A to the ECM connector terminal D5. Is the problem found?	-	Go to *Step 9*	Go to *Step 11*

Ignition System Check (Cont'd)

Step	Action	Value(s)	Yes	No
9	1. Repair the wiring as needed. 2. Connect the DIS ignition coil connector. 3. Check for the presence of spark from all of the ignition wires. Is spark present from all of the ignition wires?	-	System OK	-
10	1. Replace the DIS ignition coil. 2. Connect the DIS ignition coil connector. 3. Check for the presence of spark from all of the ignition wires. Is spark present from all of the ignition wires?	-	System OK	-
11	1. Replace the ECM. 2. Connect the DIS ignition coil connector. 3. Check for the presence of spark from all of the ignition wires. Is spark present from all of the ignition wires?	-	System OK	-
12	1. Turn the ignition OFF. 2. Disconnect the crankshaft position sensor (CPS) connector. 3. Measure the resistance between the CPS terminals 1 and 2. Is the resistance within the value specified?	400-600 Ω	Go to *Step 13*	Go to *Step 28*
13	1. Measure the resistance between the CPS terminals 1 and 3. 2. Measure the resistance between the CPS terminals 2 and 3. Is the resistance infinite (open circuit)?	-	Go to *Step 14*	Go to *Step 28*
14	1. Turn the ignition ON. 2. Measure the voltage between the CPS connector terminals 1 and 3. Is the voltage within the value specified?	0.95-1.10 V	Go to *Step 20*	Go to *Step 15*
15	Measure the voltage between the CPS connector terminal 1 and ground. Is the voltage within the value specified?	0.95-1.10 V	Go to *Step 17*	Go to *Step 16*
16	Check the wire between the CPS connector terminal 1 and the ECM connector terminal C6 for an open or short. Is the problem found?	-	Go to *Step 18*	Go to *Step 11*
17	Check the wire between the CPS connector terminal 3 and ground for an open or short. Is the problem found?	-	Go to *Step 19*	Go to *Step 11*
18	Repair the wire between the CPS connector terminal 1 and the ECM connector terminal C6. Is the repair complete?	-	System OK	-
19	Repair the wire between the CPS connector terminal 3 and ground. Is the repair complete?	-	System OK	-

Ignition System Check (Cont'd)

Step	Action	Value(s)	Yes	No
20	1. Turn the ignition ON. 2. Measure the voltage between the CPS connector terminals 2 and 3. Is the voltage within the value specified?	0.95-1.10 V	Go to *Step 24*	Go to *Step 21*
21	Measure the voltage between the CPS connector terminal 2 and ground. Is the voltage within the value specified?	0.95-1.10 V	Go to *Step 17*	Go to *Step 22*
22	Check the wire between the CPS connector terminal 2 and the ECM connector terminal C5 for an open or short. Is the problem found?	-	Go to *Step 23*	Go to *Step 11*
23	Repair the wire between the CPS connector terminal 2 and the ECM connector terminal C5. Is the repair complete?	-	System OK	-
24	1. Turn the ignition OFF. 2. Connect a test light between the DIS ignition coil connector terminal D and ground. 3. Turn the ignition ON. Is the test light on?	-	Go to *Step 25*	Go to *Step 26*
25	Connect a test light between the DIS ignition coil connector terminal C and battery positive. Is the test light on?	-	Go to *Step 5*	Go to *Step 27*
26	Check for an open in the wiring between the DIS ignition coil connector, terminal D and the ignition 1 relay connector terminal 87. Is the problem found?	-	Go to *Step 29*	Go to "Ignition 1 Relay Circuit Check"
27	Repair the wire between the DIS ignition coil connector terminal C and ground. Is the repair complete?	-	System OK	-
28	Replace the crankshaft position sensor. Is the repair complete?	-	System OK	-
29	Repair the open in the wiring between the DIS ignition coil connector terminal D and the ignition 1 relay connector terminal 87. Is the repair complete?	-	System OK	-

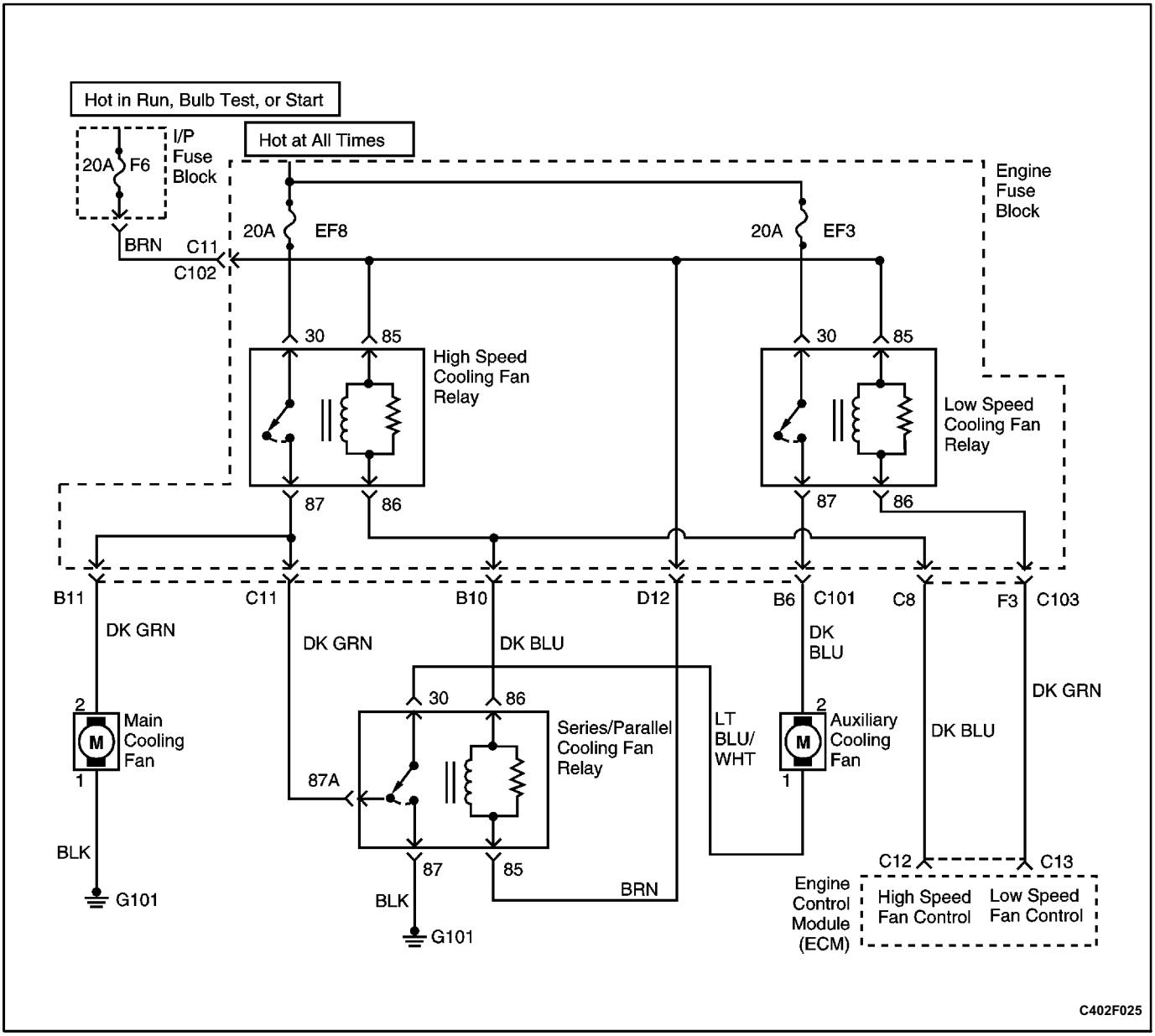

ENGINE COOLING FAN CIRCUIT CHECK

Circuit Description

The engine cooling fan circuit operates the main cooling fan and the auxiliary cooling fan. The cooling fans are controlled by the engine control module (ECM) based on inputs from the engine coolant temperature sensor (CTS) and the air conditioning pressure (ACP) sensor. The ECM controls the low speed cooling fan operation by internally grounding the ECM connector terminal C13. This energizes the low speed cooling fan relay and operates the main cooling fan and the auxiliary cooling fan at low speed as the cooling fans are connected in a series circuit. The ECM controls the high speed cooling fan operation by internally grounding the ECM connector terminal C13 and the ECM connector terminal C12 at the same time. This energizes the low speed cooling fan relay, the high speed cooling fan relay, and the series/parallel cooling fan relay resulting in high speed fan operation as the cooling fans are now connected in a parallel circuit.

Diagnostic Aids

- If the owner complained of an overheating problem, it must be determined if the complaint was due to an actual boil over, or the engine coolant temperature gauge indicated overheating. If the engine is overheating and the cooling fans are on, the cooling system should be checked.
- If the engine fuse block fuses EF3 or EF8 become open (blown) immediately after installation, inspect for a short to ground in the wiring of the appropriate circuit. If the fuses become open (blown) when the cooling fans are to be turned on by the engine control module (ECM), suspect a faulty cooling fan motor.
- The ECM will turn the cooling fans on at low speed when the coolant temperature is 93°C (199°F). The ECM will turn the cooling fans off when the coolant temperature is 90°C (194°F).

- The ECM will turn the cooling fans on at high speed when the coolant temperature is 97°C (207°F). The ECM will change the cooling fans from high speed to low speed when the coolant temperature is 94°C (201°F).
- The ECM will turn the cooling fans on at low speed when the A/C system is on. The ECM will change the cooling fans from low speed to high speed when the high side A/C pressure is 1,859 kPa (269 psi) then return to low speed when the high side A/C pressure is 1,449 kPa (210 psi).
- The cooling fan circuit can be checked quickly by disconnecting the ECM white connector and grounding the connector terminal C13. This should create low speed cooling fan operation with the ignition ON. By grounding the ECM connector terminals C13 and C12 and turning the ignition ON, high speed cooling fan operation should be achieved.

Test Description

The number(s) below refer to step(s) on the diagnostic table.

4. This step, along with step 5, checks for the ability of the engine control module (ECM) to operate the cooling fans.
8. This step, along with step 9, checks for the ability of the ECM to operate the cooling fans in response to A/C pressure readings.
16. After confirming battery voltage and the ECM supplying a ground to the coil side of the low speed cooling fan relay, by jumpering connector terminals 30 and 87 it will be determined if the relay is at fault or a wiring problem is present.
31. This step checks for the presence of battery voltage to the main cooling fan when the A/C is on. If battery voltage is present and the cooling fans are not operating, the problem is in the ground side of the cooling fan circuit.
37. By directly grounding the ECM connector terminals C13 and C12, the main and auxiliary cooling fans should run at high speed.

Engine Cooling Fan Circuit Check

Step	Action	Value(s)	Yes	No
1	Perform an On-Board Diagnostic (OBD) System Check. Was the check performed?	-	Go to *Step 2*	Go to "On-Board Diagnostic System Check"
2	1. Check the engine fuse block fuse EF3. 2. Replace the fuse as needed. Is the fuse OK?	-	Go to *Step 3*	Go to "Diagnostic Aids"
3	1. Check the engine fuse block fuse EF8. 2. Replace the fuse as needed. Is the fuse OK?	-	Go to *Step 4*	Go to "Diagnostic Aids"
4	1. Turn the ignition OFF. 2. Turn the A/C switch OFF. 3. Connect a scan tool to the data link connector (DLC). 4. Start the engine. 5. The cooling fans should run at low speed when the coolant temperature reaches 93°C (199°F). Do the cooling fans run at low speed?	-	Go to *Step 5*	Go to *Step 10*

Engine Cooling Fan Circuit Check (Cont'd)

Step	Action	Value(s)	Yes	No
5	1. Turn the ignition OFF. 2. Turn the A/C switch OFF. 3. Connect a scan tool to the DLC. 4. Start the engine. 5. The cooling fans should run at high speed when the coolant temperature reaches 97°C (207°F). Do the cooling fans run at high speed?	-	Go to *Step 6*	Go to *Step 33*
6	1. Turn the ignition OFF. 2. Start the engine. 3. Turn the A/C switch ON. Does the A/C compressor clutch engage?	-	Go to *Step 8*	Go to *Step 7*
7	1. Diagnose the A/C compressor clutch circuit. 2. Repair the A/C compressor clutch circuit as needed. 3. Start the engine. 4. Turn the A/C switch ON. Does the A/C compressor clutch engage?	-	Go to *Step 8*	-
8	Do the cooling fans run at low speed?	-	Go to *Step 9*	Go to *Step 31*
9	1. Turn the ignition OFF. 2. Connect the A/C pressure gauges. 3. Start the engine. 4. Turn the A/C switch ON. 5. The cooling fans should run at high speed when the high side A/C pressure reaches 1 882 kPa (273 psi). Do the cooling fans run at high speed?	-	System OK	-
10	1. Turn the ignition OFF. 2. Connect a scan tool to the DLC. 3. The coolant temperature should be above 93°C (199°F). 4. Disconnect the auxiliary cooling fan connector. 5. Turn the ignition ON. 6. Connect a test light between the auxiliary cooling fan connector terminal 2 and ground. Is the test light on?	-	Go to *Step 11*	Go to *Step 12*
11	1. Turn the ignition OFF. 2. Connect a scan tool to the DLC. 3. The coolant temperature should be above 93°C (199°F). 4. Disconnect the auxiliary cooling fan connector. 5. Connect a test light between the auxiliary cooling fan connector terminal 1 and battery positive. Is the test light on?	-	Go to *Step 28*	Go to *Step 17*
12	1. Turn the ignition OFF. 2. Disconnect the low speed cooling fan relay. 3. Connect a test light between the low speed cooling fan relay connector terminal 85 and ground. 4. Turn the ignition ON. Is the test light on?	-	Go to *Step 13*	Go to *Step 24*

Engine Cooling Fan Circuit Check (Cont'd)

Step	Action	Value(s)	Yes	No
13	1. Turn the ignition OFF. 2. Connect the low speed cooling fan relay. 3. Disconnect the engine control module (ECM) red connector. 4. Connect a fused jumper between the ECM connector terminal C13 and ground. 5. Turn the ignition ON. Do the cooling fans run at low speed?	-	Go to *Step 30*	Go to *Step 14*
14	Check for an open wire between the low speed cooling fan relay connector terminal 86 and the ECM connector terminal C13. Is the problem found?	-	Go to *Step 25*	Go to *Step 15*
15	1. Turn the ignition OFF. 2. Disconnect the low speed cooling fan relay. 3. Connect a test light between the low speed cooling fan relay connector terminal 30 and ground. Is the test light on?	-	Go to *Step 16*	Go to *Step 23*
16	Connect a fused jumper between the low speed cooling fan relay connector terminals 30 and 87. Do the cooling fans run at low speed?	-	Go to *Step 26*	Go to *Step 17*
17	1. Disconnect the series/parallel cooling fan relay. 2. Connect a fused jumper between the low speed cooling fan relay connector terminals 30 and 87. 3. Connect a fused jumper between the series/parallel cooling fan relay connector terminals 30 and 87. Do the cooling fans run at low speed?	-	Go to *Step 27*	Go to *Step 18*
18	Check the wire between the low speed cooling fan relay connector terminal 87 to the auxiliary cooling fan connector terminal 2 for an open. Is the problem found?	-	Go to *Step 22*	Go to *Step 19*
19	Check the wire between the auxiliary cooling fan connector terminal 1 and the series/parallel cooling fan relay connector terminal 30 for an open. Is the problem found?	-	Go to *Step 22*	Go to *Step 20*
20	Check the wire between the series/parallel cooling fan relay connector terminal 87 and the main cooling fan connector terminal 2 for an open. Is the problem found?	-	Go to *Step 22*	Go to *Step 21*
21	Check for an open wire between the main cooling fan connector terminal 1 and ground. Is the problem found?	-	Go to *Step 22*	Go to *Step 29*
22	Repair the open wire as needed. Is the repair complete?	-	System OK	-
23	Repair the open between the low speed cooling fan relay connector terminal 30 and the battery. Is the repair complete?	-	System OK	-

Engine Cooling Fan Circuit Check (Cont'd)

Step	Action	Value(s)	Yes	No
24	Repair the open between the low speed cooling fan relay connector terminal 85 and the ignition switch. Is the repair complete?	-	System OK	-
25	Repair the open wire between the low speed cooling fan relay connector terminal 86 and the ECM connector terminal C13. Is the repair complete?	-	System OK	-
26	Replace the low speed cooling fan relay. Is the repair complete?	-	System OK	-
27	Replace the series/parallel cooling fan relay. Is the repair complete?	-	System OK	-
28	Replace the auxiliary cooling fan. Is the repair complete?	-	System OK	-
29	Replace the main cooling fan. Is the repair complete?	-	System OK	-
30	Replace the ECM. Is the repair complete?	-	System OK	-
31	1. Turn the ignition OFF. 2. Disconnect the auxiliary cooling fan connector. 3. Connect a test light between the auxiliary cooling fan connector terminal B and ground. 4. Turn the A/C switch ON. 5. Start the engine. Is the test light on?	-	Go to *Step 32*	Go to *Step 12*
32	1. Turn the ignition OFF. 2. Connect a test light between the main cooling fan connector terminal A and battery positive. 3. Turn the A/C switch ON. 4. Start the engine. Is the test light on?	-	Go to *Step 28*	Go to *Step 17*
33	1. Turn the ignition OFF. 2. Disconnect the high speed cooling fan relay. 3. Connect a test light between the high speed cooling fan relay connector terminal 85 and ground. 4. Turn the ignition ON. Is the test light on?	-	Go to *Step 34*	Go to *Step 44*
34	1. Turn the ignition OFF. 2. Connect a test light between the high speed cooling fan relay connector terminal 30 and ground. Is the test light on?	-	Go to *Step 35*	Go to *Step 45*
35	1. Disconnect the series/parallel cooling fan relay. 2. Connect a test light between the series/parallel cooling fan relay connector terminal 85 and ground. 3. Turn the ignition ON. Is the test light on?	-	Go to *Step 36*	Go to *Step 46*

Engine Cooling Fan Circuit Check (Cont'd)

Step	Action	Value(s)	Yes	No
36	1. Turn the ignition OFF. 2. Connect a test light between the series/parallel cooling fan relay connector terminal 87 and battery positive. Is the test light on?	-	Go to *Step 37*	Go to *Step 47*
37	1. Connect the auxiliary cooling fan connector. 2. Connect the high speed cooling fan relay. 3. Connect the series/parallel cooling fan relay. 4. Disconnect the ECM white connector. 5. Connect a fused jumper between the ECM connector terminal C13 and ground. 6. Connect a fused jumper between the ECM connector terminal C12 and ground. 7. Turn the ignition ON. Do the cooling fans run at high speed?	-	Go to *Step 30*	Go to *Step 38*
38	1. Turn the ignition OFF. 2. Check for an open wire between the high speed cooling fan relay connector terminal 86 and the ECM connector terminal C12. Is the problem found?	-	Go to *Step 22*	Go to *Step 39*
39	1. Disconnect the high speed cooling fan relay. 2. Connect a test light between the high speed cooling fan relay connector terminal 87 and battery positive. Is the test light on?	-	Go to *Step 40*	Go to *Step 48*
40	1. Disconnect the ECM red connector. 2. Connect a fused jumper between the ECM connector terminal C12 and ground. 3. Disconnect the series/parallel cooling fan relay. 4. Connect a test light between the series/parallel cooling fan relay connector terminal 86 and battery positive. Is the test light on?	-	Go to *Step 41*	Go to *Step 49*
41	1. Connect the series/parallel cooling fan relay. 2. Connect a fused jumper between the ECM connector terminal C12 and ground. 3. Disconnect the high speed cooling fan relay. 4. Connect a fused jumper between the high speed cooling fan relay connector terminals 30 and 87. 5. Disconnect the low speed cooling fan relay. 6. Connect a fused jumper between the low speed cooling fan relay connector terminals 30 and 87. 7. Turn the ignition ON. Do the cooling fans run at high speed?	-	Go to *Step 43*	Go to *Step 42*

Engine Cooling Fan Circuit Check (Cont'd)

Step	Action	Value(s)	Yes	No
42	1. Turn the ignition OFF. 2. Connect a fused jumper between the ECM connector terminal C12 and ground. 3. Disconnect the series/parallel cooling fan relay. 4. Connect a fused jumper between the series/parallel cooling fan relay connector terminals 30 and 87. 5. Connect a fused jumper between the low speed cooling fan relay connector terminals 30 and 87. 6. Turn the ignition ON. Do the cooling fans run at high speed?	-	Go to *Step 27*	-
43	Replace the high speed cooling fan relay. Is the repair complete?	-	System OK	-
44	Repair the open wire between the high speed cooling fan relay connector terminal 85 and the ignition switch. Is the repair complete?	-	System OK	-
45	Repair the open wire between the high speed cooling fan relay connector terminal 30 and the battery. Is the repair complete?	-	System OK	-
46	Repair the open wire between the series/parallel cooling fan relay connector terminal 85 and the ignition switch. Is the repair complete?	-	System OK	-
47	Repair the open wire between the series/parallel cooling fan relay connector terminal 87 and ground. Is the repair complete?	-	System OK	-
48	Repair the open wire between the high speed cooling fan relay connector terminal 87 and the main cooling fan connector terminal 2. Is the repair complete?	-	System OK	-
49	Repair the open wire between the series/parallel cooling fan relay connector terminal 86 and the ECM connector terminal C12. Is the repair complete?	-	System OK	-

BLANK

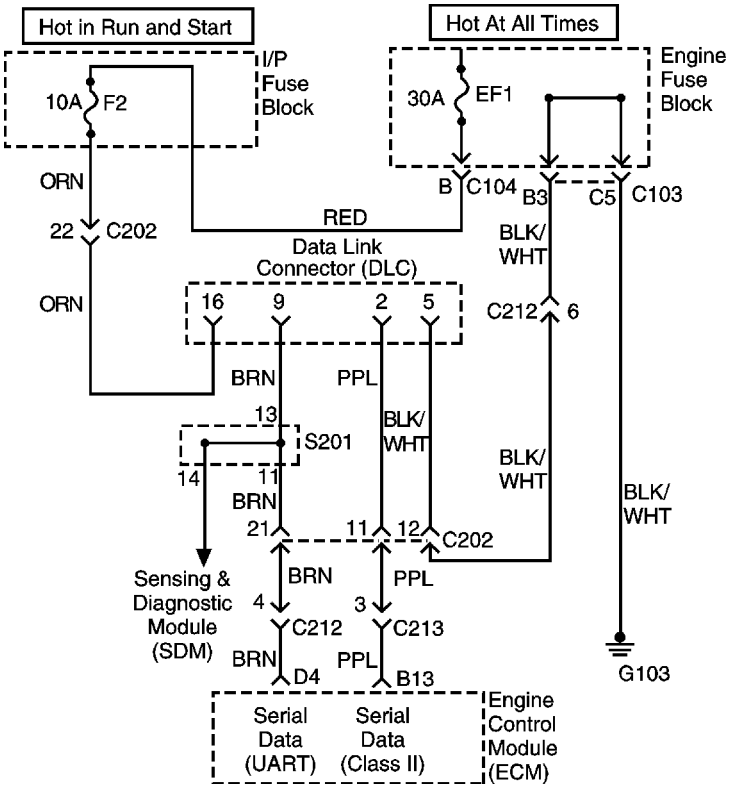

C402F007

DATA LINK CONNCTSOR DIAGNOSIS

Circuit Description

The provision for communicating with the engine control module (ECM) is the Data Link Connector (DLC). It is located under the instrument panel. The DLC is used to connect the scan tool. Battery power and ground is supplied for the scan tool through the DLC. The Class II serial data circuit to the DLC allows the ECM to communicate with the scan tool. A Universal Asynchronous Receiver Transmitter (UART) serial data line is used to communicate with the other modules such as the Electronic Brake Control Module (EBCM), the Supplemental Inflatable Restraint (SIR) system and the Instrument Panel Cluster (IPC).

Diagnostic Aids

Ensure that the correct application (model line, car year, etc.) has been selected on the scan tool. If communication still cannot be established, try the scan tool on another vehicle to ensure that the scan tool or cables are not the cause of the condition.

An intermittent may be caused by a poor connection, rubbed through wire insulation, or a broken wire inside the insulation.

Any circuitry that is suspected of causing an intermittent complaint should be thoroughly checked for the following conditions:

- Backed-out terminals.
- Improper mating of terminals.
- Broken locks.
- Improperly formed or damaged terminals.
- Poor terminal-to-wiring connection.
- Physical damage to the wiring harness.
- Corrosion.

Test Description

Number(s) below refer to the step number(s) on the Diagnostic Table.

1. The OnBoard Diagnostic (OBD) System Check prompts the technician to complete some basic checks and store the freeze frame and failure records data on the scan tool if applicable. This creates an electronic copy of the data taken when the malfunction occurred. The information is then stored on the scan tool for later reference.
3. Unlike the UART serial data circuit, the only time a Class II serial data circuit has any voltage on it is when a scan tool asks the ECM for information and sends the information out.
8. Locate and repair any shorts that may have caused the fuse to open before replacement, if the no voltage condition was due to an open fuse.
11. The replacement ECM must be reprogrammed. Refer to the latest Techline procedure for ECM reprogramming.
16. The scan tool or associated cables could be malfunctioning. Refer to the scan tool's manual for repair information.

Data Link Connector Diagnosis

Step	Action	Value(s)	Yes	No
1	Perform an OnBoard Diagnostic (OBD) System Check. Was the check performed?	-	Go to *Step 2*	Go to "OnBoard Diagnostic System Check"
2	1. Turn the ignition ON, engine OFF. 2. Install the scan tool. Does the scan tool power up?	-	Go to *Step 3*	Go to *Step 4*
3	1. Disconnect the scan tool. 2. With a test light connected to ground, probe the Class II serial data terminal 2 at the Data Link Connector (DLC). Does the test light remain OFF?	-	Go to *Step 5*	Go to *Step 6*
4	With the test light connected to ground, probe the DLC battery feed circuit terminal 16. Does the test light remain OFF?	-	Go to *Step 7*	Go to *Step 8*
5	With the test light connected to B+, probe the Class II serial data terminal 2 at the DLC. Does the test light remain OFF?	-	Go to *Step 9*	Go to *Step 10*
6	Check the Class II serial data circuit for a short to voltage and repair as necessary. Is a repair necessary?	-	Go to *Step 17*	Go to *Step 11*
7	With the test light connected to B+, probe the DLC ground circuit terminals 4. Does the test light illuminate for both circuits?	-	Go to *Step 15*	Go to *Step 12*
8	Repair the open or short to ground in the DLC battery feed circuit. Is the repair complete?	-	Go to *Step 17*	-
9	Check the Class II serial data circuit for an open or a poor connection and repair as necessary. Is a repair necessary?	-	Go to *Step 17*	Go to *Step 13*
10	Check the Class II serial data circuit for short to ground and repair as necessary. Is a repair necessary?	-	Go to *Step 17*	Go to *Step 11*
11	Replace the engine control module (ECM). Is the repair complete?	-	Go to *Step 17*	-

Data Link Connector Diagnosis (Cont'd)

Step	Action	Value(s)	Yes	No
12	Repair the open or poor connection(s) in the DLC ground circuit(s). Is the repair complete?	-	Go to *Step 17*	-
13	Reinstall the scan tool. Can the scan tool communicate with the ECM?	-	Go to *Step 17*	Go to *Step 14*
14	Install the scan tool on another vehicle with a Class II serial data terminal and check for proper operation. Does the scan tool work properly on a different vehicle?	-	Go to *Step 11*	Go to *Step 16*
15	Check the DLC electrical terminals for proper tension or excessive resistance and repair as necessary. Is a repair necessary?	-	Go to *Step 17*	Go to *Step 16*
16	1. The scan tool is malfunctioning. 2. Refer to the scan tool's manual for repair. Is the repair complete?	-	Go to *Step 17*	-
17	1. Using the scan tool, clear the Diagnostic Trouble Codes (DTCs). 2. Attempt to start the engine. Does the engine start and continue to run?	-	Go to *Step 18*	Go to *Step 1*
18	1. Allow the engine to idle until normal operation temperature is reached. 2. Check if any DTCs are set. Are any DTCs displayed that have not been diagnosed?	-	Go to applicable DTC table	System OK

BLANK

FUEL INJCTSOR BALANCE TEST

A fuel injector tester is used to energize the injector for a precise amount of time, thus spraying a measured amount of fuel into the intake manifold. This causes a drop in the fuel rail pressure that can be recorded and used to compare each of the fuel injectors. All of the fuel injectors should have the same pressure drop 10 kPa (1.5 psi).

Injector Balance Test Example

Cylinder	1	2	3	4
First Reading	296 kPa (43 psi)	296 kPa (43 psi)	296 kPa (43 psi)	296 kPa (43 psi)
Second Reading	131 kPa (19 psi)	117 kPa (17 psi)	124 kPa (18 psi)	145 kPa (21 psi)
Amount Of Drop	165 kPa (24 psi)	179 kPa (26 psi)	172 kPa (25 psi)	151 kPa (22 psi)
Average Range: 156-176 kPa (22.525.5 psi)	Injector OK	Faulty Injector - Too Much Pressure Drop	Injector OK	Faulty Injector - Too Little Pressure Drop

Caution: The fuel system is under pressure. To avoid fuel spillage and the risk of personal injury or fire, it is necessary to relieve the fuel system pressure before disconnecting the fuel lines.

Caution: Do not pinch or restrict nylon fuel lines. Damage to the lines could cause a fuel leak, resulting in possible fire or personal injury.

Notice: In order to prevent flooding of the engine, do not perform the Injector Balance Test more than once (including any retest on faulty fuel injectors) without running the engine.

Test

1. An engine cool down period of 10 minutes is necessary in order to avoid irregular readings due to hot soak fuel boiling.
2. Connect the fuel pressure gauge carefully to avoid any fuel spillage.
3. The fuel pump should run about 2 seconds after the ignition is turned to the ON position.
4. Insert a clear tube attached to the vent valve of the fuel pressure gauge into a suitable container.
5. Bleed the air from the fuel pressure gauge and hose until all of the air is bled from the fuel pressure gauge.
6. The ignition switch must be in the OFF position at least 10 seconds in order to complete the engine control module (ECM) shutdown cycle.
7. Turn the ignition ON in order to get the fuel pressure to its maximum level.
8. Allow the fuel pressure to stabilize and then record this initial pressure reading. Wait until there is no movement of the needle on the fuel pressure gauge.
9. Follow the manufacturer's instructions for the use of the adapter harness. Energize the fuel injector tester once and note the fuel pressure drop at its lowest point. Record this second reading. Subtract it from the first reading to determine the amount of the fuel pressure drop.
10. Disconnect the fuel injector tester from the fuel injector.
11. After turning the ignition ON, in order to obtain maximum pressure once again, make a connection at the next fuel injector. Energize the fuel injector tester and record the fuel pressure reading. Repeat this procedure for all the injectors.
12. Retest any of the fuel injectors that the pressure drop exceeds the 10 kPa (1.5 psi) specification.
13. Replace any of the fuel injectors that fail the retest.
14. If the pressure drop of all of the fuel injectors is within 10 kPa (1.5 psi), then the fuel injectors are flowing normally and no replacement should be necessary.
15. Reconnect the fuel injector harness and review the symptom diagnostic tables.

BLANK

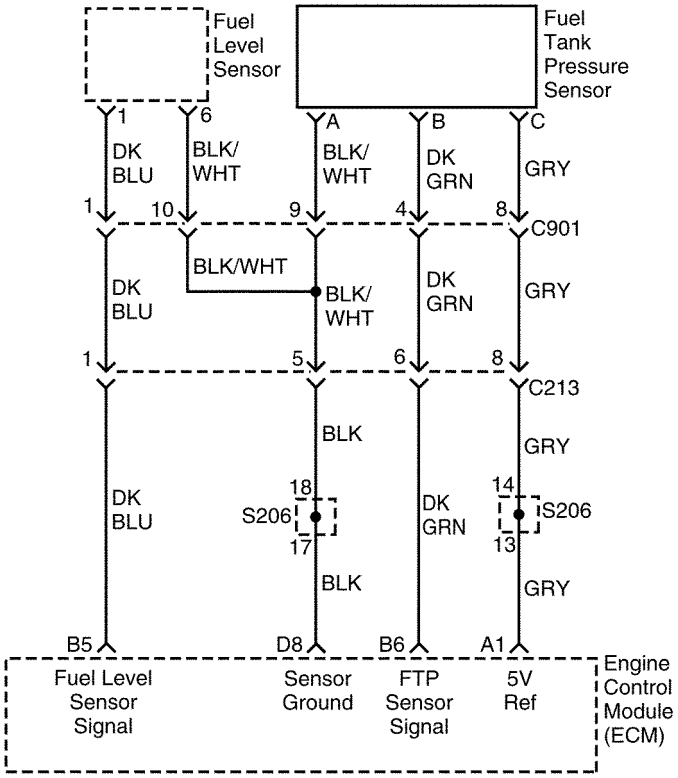

EVAP CONTROL SYSTEM DIAGNOSIS

Circuit Description

The evaporative emission (EVAP) system is checked by applying vacuum to the EVAP system and monitoring for a vacuum decay. The engine control module (ECM) monitors the vacuum level through the fuel tank pressure sensor signal. At an appropriate time, the EVAP canister purge valve and the EVAP vent solenoid are turned on, allowing the engine to draw a small vacuum on the entire evaporative emission system. After the desired vacuum level has been achieved, the EVAP canister purge valve is turned off, sealing the system. A leak is detected by monitoring for a decrease in vacuum level over a given time period, when all other variables remain constant. A leak, blockage or faulty component in the system will cause a Diagnostic Trouble Code (DTC) to be set.

Diagnostic Aids

Check for the following conditions:

- Poor connection at the ECM. Inspect harness connectors for the following conditions:
  - Backedout terminals.
  - Improper mating.
  - Broken locks.
  - Damaged terminals.
  - Poor terminaltowire connection.
- Damaged harness. Inspect the wiring harness for damage. If the harness appears to be OK, observe the Fuel Tank Vacuum Pressure display on the scan tool while moving connectors and wiring harnesses related to the sensor. A change in the display will indicate the location of the fault.
- Incorrect purge or vacuum source line routing. Verify that the source vacuum and purge lines to the EVAP canister purge valve are not switched.

EVAP Control System Diagnosis

Step	Action	Value(s)	Yes	No
1	Perform an On-Board Diagnostic (OBD) System Check. Is the check complete?	-	Go to *Step 2*	Go to "On-Board Diagnostic System Check"
2	1. Turn the ignition OFF. 2. Install the scan tool. 3. Turn the ignition ON. Are any Diagnostic Trouble Codes (DTCs) set?	-	Go to applicable DTC table	Go to *Step 3*
3	1. Disconnect the fuel tank pressure sensor electrical connector. 2. Using a digital voltmeter (DVM), measure the voltage between the 5 volt reference circuit and the sensor ground circuit at the fuel tank pressure sensor harness connector. Is the voltage near the specified value?	5 V	Go to *Step 6*	Go to *Step 4*
4	Check the 5 volt reference circuit for a poor terminal connection at the engine control module (ECM). Is a problem found?	-	Go to *Step 12*	Go to *Step 5*
5	Check for an open 5 volt reference circuit to the fuel tank pressure sensor harness connector. Is a problem found?	-	Go to *Step 11*	Go to *Step 9*
6	1. Remove the fuel cap. 2. Connect a jumper between terminal A at the fuel tank pressure sensor pigtail and terminal A at the harness connector on the ECM side. 3. Connect a jumper between terminal C at the fuel tank pressure sensor pigtail and terminal C at the harness connector on the ECM side. 4. Using a DVM, measure voltage at terminal B at the fuel tank pressure sensor pigtail. Is the voltage between the specified values?	1.3-1.7 V	Go to *Step 7*	Go to *Step 14*
7	Check the fuel tank pressure sensor signal circuit for a poor terminal connection at the ECM and repair as necessary. Is a repair necessary?	-	Go to *Step 12*	Go to *Step 8*
8	Check the fuel tank pressure sensor signal circuit between the fuel tank pressure sensor connector and the ECM for an open, short to ground, or short to voltage and repair as necessary. Is a repair necessary?	-	Go to *Step 13*	Go to *Step 15*
9	Check the sensor ground circuit for a poor terminal connection at the ECM and repair as necessary. Is a repair necessary?	-	Go to *Step 12*	Go to *Step 10*
10	Check for an open in the sensor ground circuit. Is a problem found?	-	Go to *Step 13*	Go to *Step 15*
11	Check for a poor circuit terminal connection at the fuel tank pressure sensor connector and repair as necessary. Is a repair necessary?	-	Go to *Step 12*	Go to *Step 14*
12	Replace the malfunctioning harness connector terminals. Is the repair complete?	-	System OK	-

EVAP Control System Diagnosis (Cont'd)

Step	Action	Value(s)	Yes	No
13	Locate and repair the open/short circuit in the wiring harness. Is the repair complete?	-	System OK	-
14	Replace the fuel tank pressure sensor. Is the repair complete?	-	System OK	-
15	Replace the ECM. Is the repair complete?	-	System OK	-

TROUBLE CODE DIAGNOSIS

CLEARING TROUBLE CODES

Notice: To prevent engine control module (ECM) damage, the key must be OFF when disconnecting or reconnecting the power to the ECM (for example battery cable, ECM pigtail connector, ECM fuse, jumper cables, etc.).

When the ECM sets a diagnostic trouble code (DTC). The Malfunction Indicator Lamp (MIL) lamp will be turned on only for type A and B but a DTC will be stored in the ECM's memory for all type of DTC. If the problem is intermittent, the MIL will go out after 10 seconds if the fault is no longer present. The DTC will stay in the ECM's memory until cleared by scan tool. Removing battery voltage for 10 seconds will clear some stored DTCs.

DTCs should be cleared after repairs have been completed. Some diagnostic tables will tell you to clear the codes before using the chart. This allows the ECM to set the DTC while going through the chart, which will help to find the cause of the problem more quickly.

DIAGNOSTIC TROUBLE CODES

DTC	Description	Type	Illuminate MIL
P0106	Manifold Absolute Pressure Rationality	B	Yes
P0107	Manifold Absolute Pressure Low Voltage	A	Yes
P0108	Manifold Absolute Pressure High Voltage	A	Yes
P0112	Intake Air Temperature Low Voltage	A	Yes
P0113	Intake Air Temperature High Voltage	A	Yes
P0117	Engine Coolant Temperature Low Voltage	A	Yes
P0118	Engine Coolant Temperature High Voltage	A	Yes
P0122	Throttle Position Sensor Low Voltage	A	Yes
P0123	Throttle Position Sensor High Voltage	A	Yes
P0131	O2 Bank 1 Sensor 1 Low Voltage	A	Yes
P0132	O2 Bank 1 Sensor 1 High Voltage	A	Yes
P0134	O2 Bank 1 Sensor 1 No Activity	A	Yes
P0137	O2 Bank 1 Sensor 2 Low Voltage	A	Yes
P0138	O2 Bank 1 Sensor 2 High Voltage	A	Yes
P0140	O2 Bank 1 Sensor 2 No Activity	A	Yes
P0141	O2 Bank 1 Sensor 2 Heater	B	Yes
P0201	Injector 1 Circuit Fault	A	Yes
P0202	Injector 2 Circuit Fault	A	Yes
P0203	Injector 3 Circuit Fault	A	Yes
P0204	Injector 4 Circuit Fault	A	Yes

Diagnostic Trouble Codes (Cont'd)

DTC	Description	Type	Illuminate MIL
P0325	Knock Sensor SNEF Internal Malfunction	B	Yes
P0327	Knock Sensor Circuit Fault	B	Yes
P0336	58X Crank Position Extra/Missing Pulses	B	Yes
P0337	58X Crank Position No Signal	A	Yes
P0351	Ignition Control A Circuit Fault	A	Yes
P0352	Ignition Control B Circuit Fault	A	Yes
P0404	Exhaust Gas Recirculation Open Valve Position Error	B	Yes
P0405	Exhaust Gas Recirculation Pintle Position Low Voltage	A	Yes
P0406	Exhaust Gas Recirculation Pintle Position High Voltage	A	Yes
P0443	Evaporative Emission System Purge Control Circuit	A	Yes
P0480	Cooling Fan Relay 1 Fan Control Circuit Fault	D	No
P0481	Cooling Fan Relay 2 Fan Control Circuit Fault	D	No
P0502	Vehicle Speed (Engine Side) No Signal	B	Yes
P0506	Idle Speed RPM Lower Than Desired Idle Speed	B	Yes
P0507	Idle Speed RPM Higher Than Desired Idle Speed	B	Yes
P0562	System Voltage (Engine Side) Too Low	D	No
P0563	System Voltage (Engine Side) Too High	D	No
P0601	ECM (Engine Side) Checksum Fault	A	Yes
P1106	Manifold Absolute Pressure Intermittent High Voltage	D	No
P1107	Manifold Absolute Pressure Intermittent Low Voltage	D	No
P1109	Variable Geometry Induction Solenoid Electrical Fault	D	No
P1111	Intake Air Temperature Intermittent High Voltage	D	No
P1112	Intake Air Temperature Intermittent Low Voltage	D	No
P1114	Engine Coolant Temperature Intermittent Low Voltage	D	No
P1115	Engine Coolant Temperature Intermittent High Voltage	D	No
P1121	Throttle Position Sensor Intermittent High Voltage	D	No
P1122	Throttle Position Sensor Intermittent Low Voltage	D	No
P1404	Exhaust Gas Recirculation Closed Valve Pintle Error	B	Yes
P1509	Idle Air Control Counts Too High	D	No
P1520	Park/Neutral Discrete Fault	D	No
P1625	ECM Internal System Reset	D	No
P1640	ODM Internal SPI Communication	A	Yes

BLANK

DIAGNOSTIC TROUBLE CODE (DTC) P0106

MANIFOLD ABSOLUTE PRESSURE RATIONALITY

Circuit Description

The engine control module (ECM) uses the Manifold Absolute Pressure (MAP) sensor to control the fuel delivery and the ignition timing. The MAP sensor measures the changes in the intake manifold pressure which results from engine load (intake manifold vacuum) and the rpm changes, and it converts these into voltage outputs. The ECM can detect if the MAP sensor is not responding to the TP changes by comparing the actual MAP change to a predicted MAP change based on the amount of TP change that occurs. If the ECM does not see the expected MAP change or more, DTC P0106 will set.

Conditions for Setting the DTC

- DTCs P0107, P0108, P0117, P0118, P0122, P0123, P0201, P0202, P0203, P0204, P0300, P0351, P0352, P0402, P0404, P0405, P0406, P0443, P0506, P0507, P1404, P1441, P1627 not set.
- Engine running.
- Valid barometric pressure (BARO) update.
- A/C steady state.
- No power steering cramp.
- No TPS fail conditions present.
- No MAP fail conditions present.
- Change in Idle Air Control (IAC) is less than 4 counts.
- Coolant temperature is greater than 10°C (14°F).
- Change in rpm is less than 200.
- Change in TPS is less than 6%.
- The rpm is between 1300 and 4500.
- All of the above are stabilized for 0.5 seconds.

Action Taken When the DTC Sets

- The Malfunction Indicator Lamp (MIL) will illuminate.
- The ECM will record operating conditions at the time the diagnostic fails. This information will be stored in the Freeze Frame and Failure Records buffers.
- A history DTC is stored.
- The Coolant fan turns on.
- The ECM will substitute a fixed MAP value and use TP to control the fuel delivery. (The scan tool will not show defaulted value.)

Conditions for Clearing the MIL/DTC

- The MIL will turn off after three consecutive ignition cycles in which the diagnostic runs without a fault.
- A history DTC will clear after 40 consecutive warm-up cycles without a fault.
- DTC(s) can be cleared by using the scan tool.

Diagnostic Aids

With the ignition ON and the engine stopped, the manifold pressure is equal to atmospheric pressure and the signal voltage will be high. This information is used by the ECM as an indication of vehicle altitude. Comparison of this reading with a known good vehicle with the same sensor is a good way to check the accuracy of a suspect sensor. Readings should be the same ±0.4 volts.

The MAP sensor vacuum source should be thoroughly checked for restrictions at the intake manifold.

Test Description

Numbers below refer to the step numbers on the Diagnostic Table.

1. The On-Board Diagnostic (OBD) System Check prompts the technician to complete some basic checks and store the freeze frame and failure records data on the scan tool if applicable. This creates an electronic copy of the data taken when the malfunction occurred. The information is then stored on the scan tool for later reference.
2. A sensor that displays an ignition ON, engine OFF BARO value that does not appear normal for the altitude the vehicle is in should be considered to be malfunctioning.
3. While starting the engine, the MAP sensor should detect any changes in the manifold pressure. This test is to determine if the sensor is stuck at a valve.
4. A normal MAP sensor will react as quickly to the throttle changes as they can be made. A sensor should not appear to be lazy or catch up with the throttle movements.
5. This step checks if the reason for no MAP change was due to a faulty sensor or vacuum source to the sensor.
7. The MAP sensor vacuum source should be thoroughly checked for restrictions. A drill bit can be used to clean out any casting flash that may exist in the vacuum port.
9. The MAP Sensor System Performance diagnostic may have to complete several tests before determining if the diagnostic has passed or failed the last test. Operate the vehicle in the Conditions for Setting the DTC several times to ensure that the diagnostic runs enough tests to pass or fail.
10. If no faults have been found at this point and no additional DTCs are set, refer to "Diagnostic Aids" in this section for additional checks and information.

DTC P0106 Manifold Absolute Pressure Rationality

Step	Action	Value(s)	Yes	No
1	Perform an On-Board Diagnostic (OBD) System Check. Is the system check complete?	-	Go to *Step 2*	Go to "On-Board Diagnostic System Check"
2	1. Install a scan tool. 2. Turn the ignition switch ON with the engine not running. 3. Compare the barometric pressure (BARO) reading with a known good vehicle. Is the BARO reading normal for your altitude?	0.25 V	Go to *Step 3*	Go to *Step 8*
3	Start the engine while watching the Manifold Absolute Pressure (MAP) sensor value. Does the MAP sensor value change while starting the engine?	4.7 V	Go to *Step 4*	Go to *Step 5*
4	With the engine still running, snap the throttle while watching the MAP sensor display on the scan tool. Does the MAP sensor value change rapidly with the throttle position changes?	0.25 V	Go to *Step 9*	Go to *Step 6*
5	1. Disconnect the MAP sensor vacuum hose and install a vacuum gauge to the MAP sensor. 2. Turn the ignition switch ON, with the engine OFF. 3. Apply 15 in HG to the MAP sensor. Does the MAP sensor value on the scan tool change?	-	Go to *Step 7*	Go to *Step 8*
6	1. Remove the MAP sensor hose from the manifold port. 2. Inspect the port and the hose for restrictions and repair as necessary. Is the action complete?	4.0 V	Go to *Step 9*	Go to *Step 8*
7	Repair the restriction in the MAP sensor vacuum port or hose. Is the action complete?	-	Go to *Step 9*	-
8	Replace the MAP sensor. Is the action complete?	-	Go to *Step 9*	-
9	1. Using the scan tool, clear the Diagnostic Trouble Codes (DTCs). 2. Start the engine and idle at normal operating temperature. 3. Operate the vehicle within the Conditions for setting this DTC as specified in the supporting text. Does the scan tool indicate that this diagnostic has run and passed?	-	Go to *Step 10*	Go to *Step 2*
10	Check if any additional DTCs are set. Are any DTCs displayed that have not been diagnosed?	-	Go to applicable DTC table	System OK

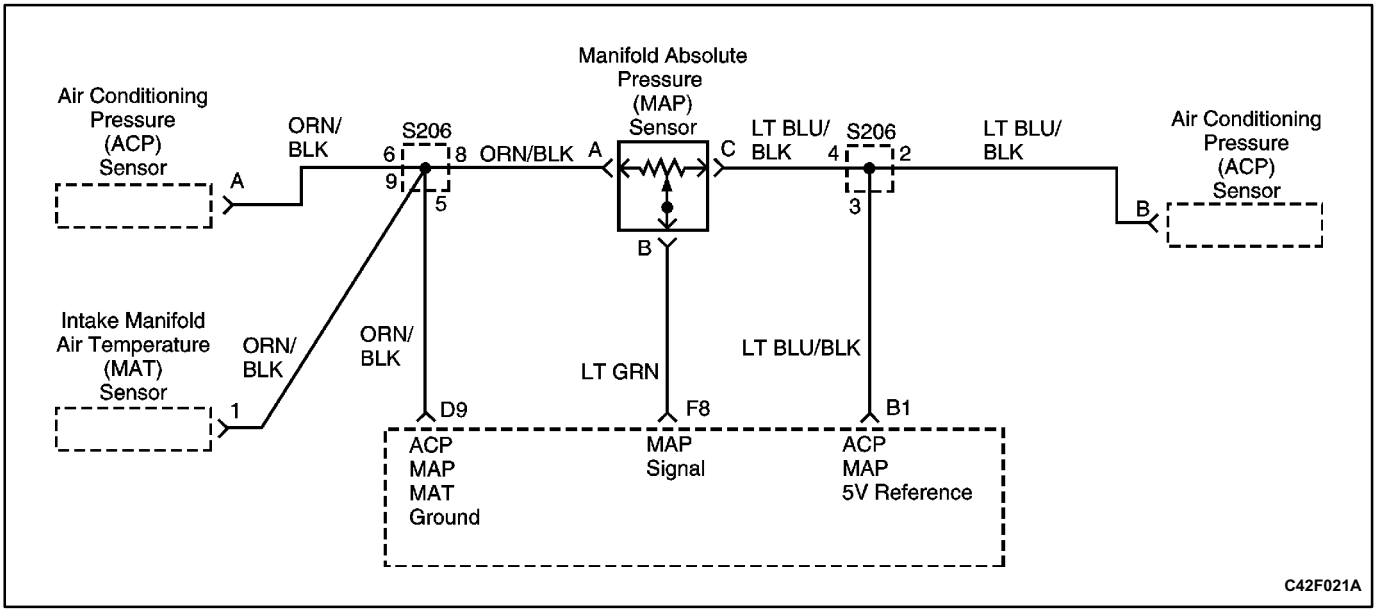

DIAGNOSTIC TROUBLE CODE (DTC) P0107 MANIFOLD ABSOLUTE PRESSURE LOW VOLTAGE

Circuit Description

The engine control module (ECM) uses the Manifold Absolute Pressure (MAP) sensor to control the fuel delivery and the ignition timing. The MAP sensor measures the changes in the intake manifold pressure which results from engine load (intake manifold vacuum) and the rpm changes, and it converts these into voltage outputs. The ECM sends a 5 volt reference voltage to the MAP sensor. As the manifold pressure changes, the output voltage of the MAP sensor also changes. By monitoring the MAP sensor output voltage, the ECM knows the manifold pressure. A low pressure (low voltage) output voltage will be about 1.0 to 1.5 volts at idle, while higher pressure (high voltage) output voltage will be about 4.5 to 4.8 at Wide Open Throttle (WOT). The MAP sensor is also used, under certain conditions, to measure barometric pressure (BARO), allowing the ECM to make adjustments for different altitudes.

Conditions for Setting the DTC

- No Throttle Position Sensor (TPS) fail conditions present.
- Engine running.
- MAP is less than 12 kPa.
- The TPS is greater than or equal to 2.0% if the rpm is less than or equal to 2000.
- The TPS is greater than 5.0% if the rpm is greater than 2000.

Action Taken When the DTC Sets

- The Malfunction Indicator Lamp (MIL) will illuminate.
- The ECM will record operating conditions at the time the diagnostic fails. This information will be stored in the Freeze Frame and Failure Records buffers.
- A history DTC is stored.
- The Coolant fan turns on.
- The ECM will substitute a fixed MAP value and use TP to control the fuel delivery. (The scan tool will not show defaulted 0.)

Conditions for Clearing the MIL/DTC

- The MIL will turn off after three consecutive ignition cycles in which the diagnostic runs without a fault.
- A history DTC will clear after 40 consecutive warmup cycles without a fault.
- DTC(s) can be cleared by using the scan tool.

Diagnostic Aids

With the ignition ON and the engine stopped, the manifold pressure is equal to atmospheric pressure and the signal voltage will be high. This information is used by the ECM as an indication of vehicle altitude. Comparison of this reading with a known good vehicle with the same sensor is a good way to check the accuracy of a suspect sensor. Readings should be the same ±0.4 volt.

If a DTC P0107 is intermittent, refer to "Manifold Absolute Pressure Check" in this section for further diagnosis.

Important: After repairs, use the scan tool FUEL TRIM RESET function to reset longterm fuel trim to 128 (0%).

Test Description

Numbers below refer to the step numbers on the Diagnostic Table.

1. The OnBoard Diagnostic (OBD) System Check prompts the technician to complete some basic checks and store the freeze frame and failure records data on the scan tool if applicable. This creates an electronic copy of the data taken when the

malfunction occurred. The information is then stored on the scan tool for later reference.

2. This step will determine if DTC P0107 is the result of a hard failure or an intermittent condition.
3. Jumpering harness terminal B to C (signal circuit to 5 volts) will determine if the sensor is malfunctioning or if there is a problem with the ECM or wiring.
6. The scan tool may not display 5 volts. The important thing is that the ECM recognizes the voltage as more than 4 volts, indicating that the ECM and the signal circuit are OK. A test light that illuminates indicates a short to ground in the signal circuit.
7. A short to ground in the 5 volt reference circuit could also set additional DTCs.
11. The replacement ECM must be reprogrammed. Refer to the latest Techline procedure for the ECM reprogramming.

DTC P0107 Manifold Absolute Pressure Low Voltage

Step	Action	Value(s)	Yes	No
1	Perform an OnBoard Diagnostic (OBD) System Check. Is the system check complete?	-	Go to *Step 2*	Go to "OnBoard Diagnostic System Check"
2	With engine idling, install a scan tool. Does the scan tool display Manifold Absolute Pressure (MAP) voltage below the specified value?	0.25 V	Go to *Step 3*	Go to *Step 4*
3	1. Turn the ignition switch OFF. 2. Disconnect the MAP sensor electrical connector. 3. Jumper the MAP signal circuit at terminal B to the 5 volt reference circuit at terminal C. 4. Turn the ignition switch on. Does the MAP voltage read more than the specified value?	4.7 V	Go to *Step 5*	Go to *Step 6*
4	1. Turn the ignition switch ON with the engine OFF, review the Freeze Frame data, and note the parameters. 2. Operate the vehicle within the freeze frame conditions and Conditions For Setting the DTC as noted. Does the scan tool display MAP voltage below the specified value?	0.25 V	Go to *Step 3*	Go to "Diagnostic Aids"
5	Inspect the MAP sensor harness electrical connector terminals for the following conditions: ● Poor connections. ● Proper contact tension. ● Poor terminal to wire connection. Is a problem found?	-	Go to *Step 8*	Go to *Step 9*
6	1. Turn the ignition switch OFF. 2. Remove the jumper wire. 3. Probe the MAP sensor signal circuit terminal F8 with a test light to B+. 4. Turn the ignition switch ON. Does the scan tool read over the specified value?	4.0 V	Go to *Step 7*	Go to *Step 12*
7	Check the MAP sensor 5 volt reference circuit at terminal B1 for an open or short to ground. Is a problem found?	-	Go to *Step 10*	Go to *Step 11*

DTC P0107 Manifold Absolute Pressure Low Voltage (Cont'd)

Step	Action	Value(s)	Yes	No
8	Repair the connection terminals as necessary. Is the action complete?	-	Go to *Step 14*	-
9	Replace the MAP sensor. Is the action complete?	-	Go to *Step 14*	-
10	Repair the MAP sensor 5 volt reference circuit. Is the action complete?	-	Go to *Step 14*	-
11	Replace the engine control module (ECM). Is the action complete?	-	Go to *Step 14*	-
12	Check the MAP sensor signal circuit for the following conditions: ● Open. ● Short to ground. ● Short to sensor ground. Is a problem found?	-	Go to *Step 13*	Go to *Step 11*
13	Repair the MAP sensor signal circuit. Is the action complete?	-	Go to *Step 14*	-
14	1. Using the scan tool, clear the Diagnostic Trouble Codes (DTCs). 2. Start the engine and idle at normal operating temperature. 3. Operate the vehicle within the Conditions for setting this DTC as specified in the supporting text. Does the scan tool indicate that this diagnostic has run and passed?	-	Go to *Step 15*	Go to *Step 2*
15	Check if any additional DTCs are set. Are any DTCs displayed that have not been diagnosed?	-	Go to applicable DTC table	System OK

BLANK

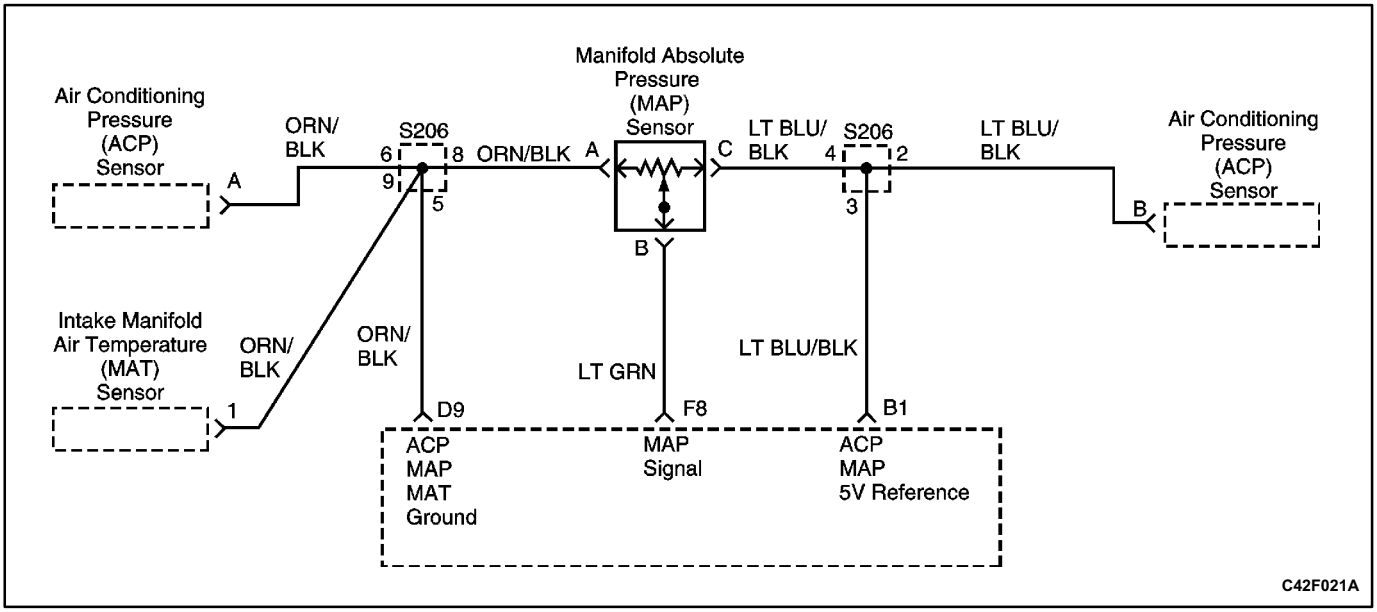

DIAGNOSTIC TROUBLE CODE (DTC) P0108 MANIFOLD ABSOLUTE PRESSURE HIGH VOLTAGE

Circuit Description

The engine control module (ECM) uses the Manifold Absolute Pressure (MAP) sensor to control the fuel delivery and the ignition timing. The MAP sensor measures the changes in the intake manifold pressure which results from engine load (intake manifold vacuum) and the rpm changes; and converts these into voltage outputs. The ECM sends a 5 volt reference voltage to the MAP sensor. As the manifold pressure changes, the output voltage of the MAP sensor also changes. By monitoring the MAP sensor output voltage, the ECM knows the manifold pressure. A low pressure (low voltage) output voltage will be about 1.0 to 1.5 volts at idle, while higher pressure (high Voltage) output voltage will be about 4.5 to 4.8 at Wide Open Throttle (WOT). The MAP sensor is also used, under certain conditions, to measure barometric pressure, allowing the ECM to make adjustments for different altitudes.

Conditions for Setting the DTC

- No Throttle Position Sensor (TPS) fail conditions present.
- Engine running.
- MAP is greater than 12 kPa.
- The TPS is less than 37% if the rpm is less than or equal to 2500.
- The TPS is less than 56% if the rpm is greater than 2500.

Action Taken When the DTC Sets

- The Malfunction Indicator Lamp (MIL) will illuminate.
- The ECM will record operating conditions at the time the diagnostic fails. This information will be stored in the Freeze Frame and Failure Records buffers.
- A history DTC is stored.
- Coolant fan turns on.
- The ECM will substitute a fixed MAP value and use TP to control the fuel delivery. (The scan tool will not show defaulted 0.)

Conditions for Clearing the MIL/DTC

- The MIL will turn off after three consecutive ignition cycles in which the diagnostic runs without a fault.
- A history DTC will clear after 40 consecutive warmup cycles without a fault.
- DTC(s) can be cleared by using the scan tool.

Diagnostic Aids

With the ignition ON and the engine stopped, the manifold pressure is equal to atmospheric pressure, and the signal voltage will be high. This information is used by the ECM as an indication of vehicle altitude. Comparison of this reading with a known good vehicle with the same sensor is a good way to check the accuracy of a suspect sensor. Readings should be the same ±0.4 volt.

If a DTC P0108 is intermittent, refer to MAP Sensor Output Check for further diagnosis.

DTC P0108 may set as a result of a misfire. If misfire is present, repair the cause of misfire before using this table. The misfire counters may be used to determine which cylinder(s) is misfiring.

Important: After repairs, use the scan tool FUEL TRIM RESET function to reset longterm fuel trim to 128 (0%).

If DTC P0172 is also set, check the 5 volt reference circuit for a short to voltage.

Test Description

Numbers below refer to the step numbers on the Diagnostic Table.

1. The OnBoard Diagnostic (OBD) System Check prompts the technician to complete some basic checks and store the freeze frame and failure records data on the scan tool if applicable. This creates an electronic copy of the data taken when the malfunction occurred. The information is then stored on the scan tool for later reference.
2. This step will determine if DTC P0108 is the result of a hard failure or an intermittent condition.
3. This step simulates conditions for a DTC P0107. If the ECM recognizes the change, the ECM, the 5 volt reference and the sensor signal circuits are OK.
5. This step also looks for an open in the sensor ground circuit. If the circuit is open, additional DTCs will also be set. If no other DTCs are set and the circuit is found to be open, then the open must be between the MAP sensor and the electrical connector ground splice.
6. When the sensor signal circuit is shorted to battery voltage, the TP will be displayed above 0% at all times and A/C High Side will be displayed high. The vehicle will also remain in Open Loop.
8. The MAP sensor vacuum source should only supply vacuum to the MAP sensor. Check the vacuum port for a restriction caused by casting flash.
9. Disconnect all sensors that use a 5 volt reference one at a time while monitoring the short on the 5 volt reference circuit. Replace any sensor that may have caused the short on the 5 volt reference circuit.
11. The replacement ECM must be reprogrammed. Refer to the latest Techline procedure for the ECM reprogramming.

DTC P0108 Manifold Absolute Pressure High Voltage

Step	Action	Value(s)	Yes	No
1	Perform an OnBoard Diagnostic (OBD) System Check. Is the system check complete?	-	Go to *Step 2*	Go to "OnBoard Diagnostic System Check"
2	1. Install a scan tool. 2. Idle the engine. Does the scan tool display a Manifold Absolute Pressure (MAP) voltage of the specified value or less?	4.0 V	Go to *Step 3*	Go to *Step 4*
3	1. Turn the ignition switch OFF. 2. Disconnect the MAP sensor electrical connector. 3. Turn the ignition switch on. Does the scan tool display a MAP voltage of the specified value or less?	1.0 V	Go to *Step 5*	Go to *Step 6*
4	1. Turn the ignition switch ON, with the engine OFF, review the Freeze Frame data and note the parameters. 2. Operate the vehicle within the freeze frame conditions and Conditions For Setting the DTC as noted. Does the scan tool display a MAP voltage equal to or greater than the specified value?	4.0 V	Go to *Step 3*	Go to "Diagnostic Aids"
5	Probe the MAP sensor signal ground circuit at terminal F8 with a test light connected to battery voltage. Does the test light illuminate?	-	Go to *Step 7*	Go to *Step 11*

DTC P0108 Manifold Absolute Pressure High Voltage (Cont'd)

Step	Action	Value(s)	Yes	No
6	Check the MAP sensor signal circuit at terminal F8 for a short to voltage and repair as necessary. Is a repair necessary?	-	Go to *Step 14*	Go to *Step 12*
7	With a digital volt meter (DVM) connected to ground, probe the 5 volt reference circuit at terminal B1. Does the DVM display near the specified value?	5 V	Go to *Step 8*	Go to *Step 9*
8	Check the MAP sensor vacuum source for being plugged or leaking. Is a problem found?	-	Go to *Step 10*	Go to *Step 13*
9	Check the 5 volt reference circuit at terminal B1 for a short to voltage and repair as necessary. Is a repair necessary?	-	Go to *Step 14*	Go to *Step 12*
10	Repair the vacuum source as necessary. Is the action complete?	-	Go to *Step 14*	-
11	Check for an open in the MAP sensor ground circuit at terminal D9 and repair as necessary. Is a repair necessary?	-	Go to *Step 14*	Go to *Step 12*
12	Replace the engine control module (ECM). Is the action complete?	-	Go to *Step 14*	-
13	Replace the MAP sensor. Is the action complete?	-	Go to *Step 14*	-
14	1. Using the scan tool, clear the Diagnostic Trouble Codes (DTCs). 2. Start the engine and idle at normal operating temperature. 3. Operate the vehicle within the Conditions for setting this DTC as specified in the supporting text. Does the scan tool indicate that this diagnostic has ran and passed?	-	Go to *Step 15*	Go to *Step 2*
15	Check if any additional DTCs are set. Are any DTCs displayed that have not been diagnosed?	-	Go to applicable DTC table	System OK

BLANK

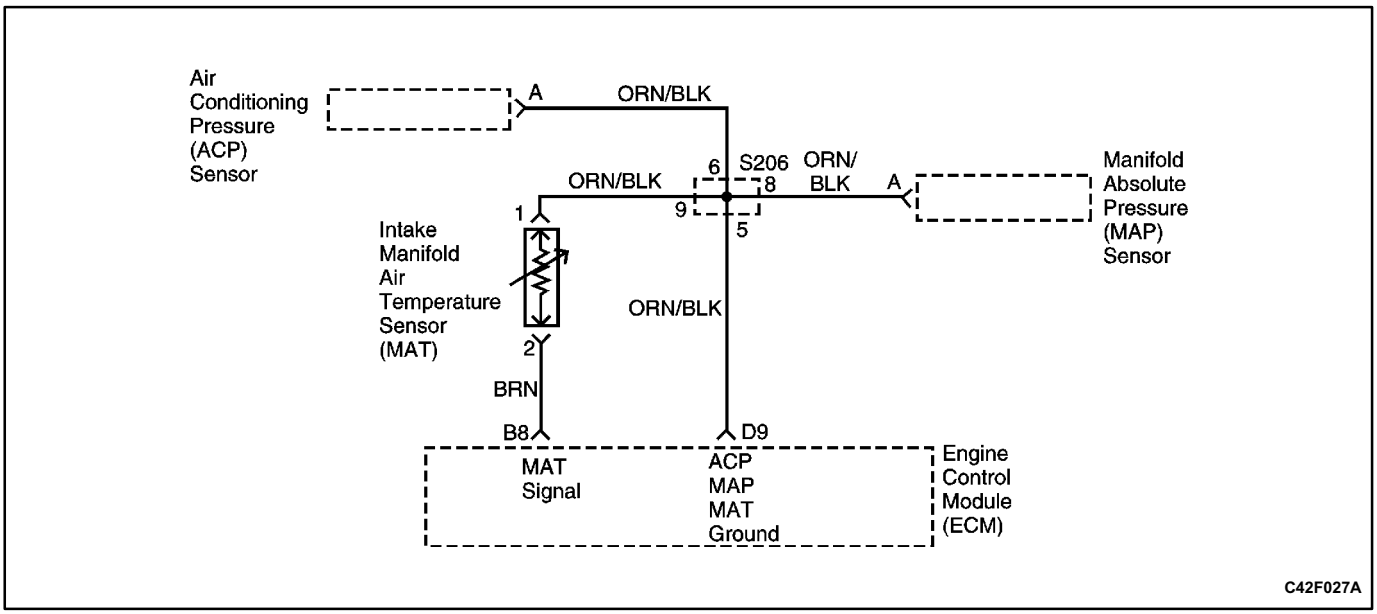

DIAGNOSTIC TROUBLE CODE (DTC) P0112
INTAKE AIR TEMPERATURE LOW VOLTAGE

Circuit Description

The Intake Manifold Air Temperature (MAT) Sensor uses a thermistor to control the signal voltage to the engine control module (ECM). The ECM supplies a 5 volt reference and a ground to the sensor. When the air is cold, the resistance is high; therefore the MAT signal voltage will be high. If the intake air is warm, resistance is low; therefore the MAT signal voltage will be low.

Conditions for Setting the DTC

- Engine run time is greater than 3 seconds.
- Vehicles speed is greater than 25 mph.
- DTC P0502 not set.

Action Taken When the DTC Sets

- The Malfunction Indicator Lamp (MIL) will illuminate.
- The ECM will record operating conditions at the time the diagnostic fails. This information will be stored in the Freeze Frame and Failure Records buffers.
- A history DTC is stored.
- The Coolant fan turns on.
- The ECM will default to 60°C (140°F) for intake air temperature. The scan tool will not show the defaulted value.

Conditions for Clearing the MIL/DTC

- The MIL will turn off after three consecutive ignition cycles in which the diagnostic runs without a fault.
- A history DTC will clear after 40 consecutive warm-up cycles without a fault.
- DTC(s) can be cleared by using the scan tool.

Diagnostic Aids

If the vehicle is at ambient temperature, compare the MAT sensor to the Engine Coolant Temperature (CTS) sensor. The MAT sensor and the CTS sensor should be relatively close to each other.

Use the Temperature vs. Resistance Values table to evaluate the possibility of a skewed sensor. Refer to "Temperature vs. Resistance" in this section.

Test Description

Number(s) below refer to the step number(s) on the Diagnostic Table.

1. The OnBoard Diagnostic (OBD) System Check prompts the technician to complete some basic checks and store the freeze frame and failure records data on the scan tool if applicable. This creates an electronic copy of the data taken when the malfunction occurred. The information is then stored on the scan tool for later reference.
4. This step simulates a DTC P0113 condition. If the scan tool displays the specified value, the MAT signal circuit and the ECM are OK.
8. The replacement ECM must be reprogrammed. Refer to the latest Techline procedure for ECM reprogramming.

DTC P0112 Intake Air Temperature Low Voltage

Step	Action	Value(s)	Yes	No
1	Perform an OnBoard Diagnostic (OBD) System Check. Is the system check complete?	-	Go to *Step 2*	Go to "OnBoard Diagnostic System Check"
2	1. Turn the ignition switch ON with the engine OFF. 2. Install a scan tool Is the Intake Air Temperature (MAT) value greater than the specified value?	128°C (262°F)	Go to *Step 4*	Go to *Step 3*
3	1. Turn the ignition switch ON with the engine OFF, review Freeze Frame data, and note the parameters. 2. Operate the vehicle within the Freeze Frame conditions and Conditions for Setting The DTC as noted. Is the MAT sensor value greater than the specified value?	128°C (262°F)	Go to *Step 4*	Go to "Diagnostic Aids"
4	Disconnect the MAT sensor electrical connector. Is the MAT sensor value below the specified value?	30°C (22°F)	Go to *Step 5*	Go to *Step 6*
5	Replace the MAT sensor. Is the action complete?	-	Go to *Step 9*	-
6	With a test light connected to B+, probe the MAT sensor signal circuit, terminal 2 at the MAT sensor electrical connector. Does the test light illuminate?	-	Go to *Step 9*	-
7	Repair the short to ground in the MAT sensor signal circuit. Is the action complete?	-	Go to *Step 13*	Go to *Step 11*
8	Replace the engine control module (ECM). Is the action complete?	-	Go to *Step 9*	-
9	1. Using the scan tool, clear the Diagnostic Trouble Codes (DTCs). 2. Start the engine and idle at normal operating temperature. 3. Operate the vehicle within the conditions for setting this DTC as specified in the supporting text. Does the scan tool indicate that this diagnostic ran and passed?	-	Go to *Step 10*	Go to *Step 2*
10	Check if any DTCs are set. Are any DTCs displayed that have not been diagnosed?	-	Go to the applicable DTC table	System OK

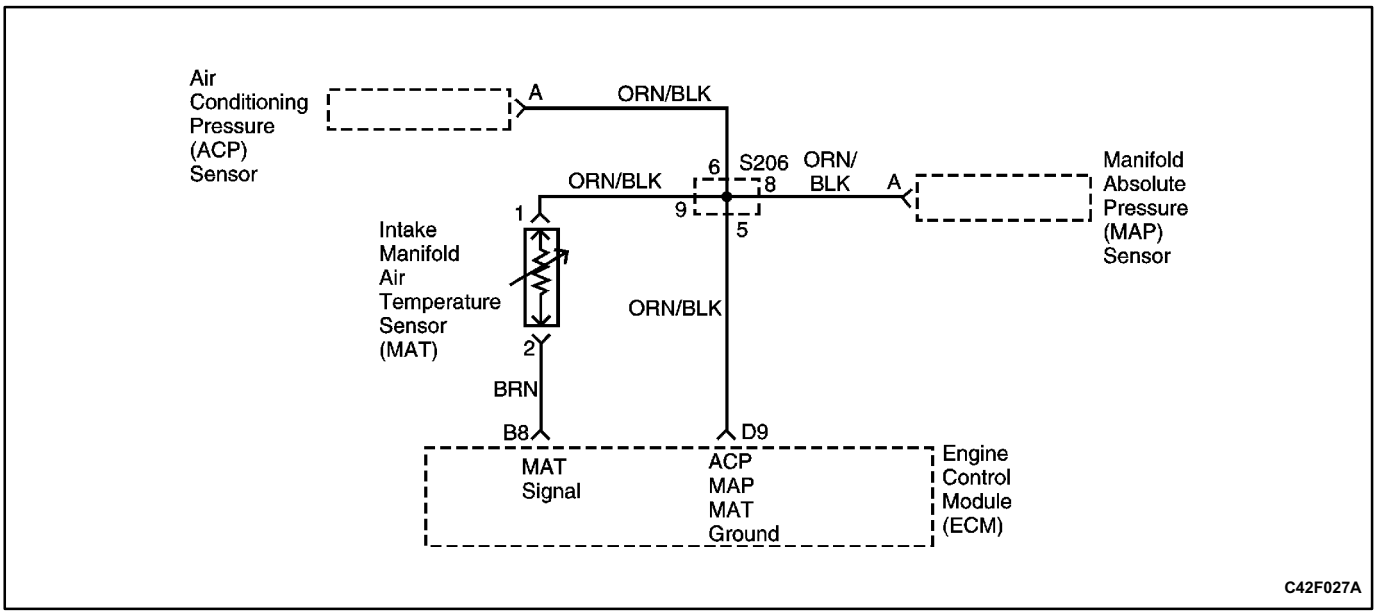

DIAGNOSTIC TROUBLE CODE (DTC) P0113
INTAKE AIR TEMPERATURE HIGH VOLTAGE

Circuit Description

The Intake Manifold Air Temperature (MAT) Sensor uses a thermistor to control the signal voltage to the engine control module (ECM). The ECM supplies a 5 volt reference and a ground to the sensor. When the air is cold, the resistance is high; therefore the MAT signal voltage will be high. If the intake air is warm, resistance is low; therefore the MAT signal voltage will be low.

Conditions for Setting the DTC

- Engine run time is greater than 120 seconds.
- Vehicles speed is less than 113 km/h (70 mph).
- Coolant temperature is greater than 8°C. (17.6°F).
- Airflow is less than 30 g/s.
- DTC P0502 not set.

Action Taken When the DTC Sets

- The Malfunction Indicator Lamp (MIL) will illuminate.
- The ECM will record operating conditions at the time the diagnostic fails. This information will be stored in the Freeze Frame and Failure Records buffers.
- A history DTC is stored.
- The coolant fan turns on.
- The ECM will default to 60°C (140°F) for MAT. The scan tool will not show the defaulted value.

Conditions for Clearing the MIL/DTC

- The MIL will turn OFF after three consecutive ignition cycles in which the diagnostic runs without a fault.
- The ECM will record operating conditions at the time the diagnostic fails. This information will be stored in the Freeze Frame and Failure Records buffers.
- A history DTC will clear after 40 consecutive warmup cycles without a fault.
- The DTCs can be cleared by using the scan tool.

Diagnostic Aids

- If the vehicle is at ambient temperature, compare the MAT sensor to the Engine Coolant Temperature (CTS) sensor. The MAT sensor and the CTS sensor should be relatively close to each other.
- Use the Temperature vs. Resistance Values table to evaluate the possibility of a skewed sensor. Refer to "Temperature vs. Resistance" in this section.

Test Description

Number(s) below refer to the step number(s) on the Diagnostic Table.

1. The On-Board Diagnostic (OBD) System Check prompts the technician to complete some basic checks and store the freeze frame and failure records data on the scan tool if applicable. This creates an electronic copy of the data taken when the malfunction occurred. The information is then stored on the scan tool for later reference.

4. This step simulates a DTC P0112. If the ECM senses the change, the ECM and wiring are OK.

5. This step will determine if the reason the ECM did not sense the change was due to a open ground or signal circuit or malfunctioning ECM.

11. The replacement ECM must be reprogrammed. Refer to the latest Techline procedure for ECM reprogramming.

DTC P0113 Intake Air Temperature High Voltage

Step	Action	Value(s)	Yes	No
1	Perform an OnBoard Diagnostic (OBD) System Check. Is the system check complete?	-	Go to *Step 2*	Go to "On-Board Diagnostic System Check"
2	1. Turn the ignition switch ON, with the engine OFF. 2. Install a scan tool. Is the Intake Air Temperature (MAT) value less than the specified value?	30°C (22°F)	Go to *Step 4*	Go to *Step 3*
3	1. Turn the ignition switch ON, with the engine OFF, review Freeze Frame data and note the parameters. 2. Operate the vehicle within the Freeze Frame conditions and Conditions for Setting The DTC as noted. Is the MAT sensor value less than the specified value?	30°C (22°F)	Go to *Step 4*	Go to "Diagnostic Aids"
4	1. Disconnect the MAT sensor electrical connector. 2. Jumper the MAT sensor signal circuit at terminal 2 and the MAT sensor ground circuit at terminal 1 together at the MAT sensor electrical connector. Is the MAT sensor value greater than the specified value?	130°C (266°F)	Go to *Step 7*	Go to *Step 8*
5	Jumper the MAT sensor signal circuit at terminal 2 to ground. Is the MAT sensor value greater than the value specified?	130°C (266°F)	Go to *Step 7*	Go to *Step 8*
6	Check for a poor connection at the MAT sensor electrical connector and replace any malfunctioning terminals if necessary. Is a repair necessary?	-	Go to *Step 12*	Go to *Step 10*
7	Check the MAT sensor ground circuit for an open and repair as necessary. Is a repair necessary?	-	Go to *Step 12*	Go to *Step 9*
8	Check the MAT sensor signal circuit for an open and repair as necessary. Is a repair necessary?	-	Go to *Step 12*	Go to *Step 9*
9	Check for a poor MAT sensor ground circuit at terminal D9 or a poor MAT sensor signal circuit terminal B8 connection at the engine control module (ECM) and repair if necessary. Is a repair necessary?	-	Go to *Step 12*	Go to *Step 11*
10	Replace the MAT sensor. Is the action complete?	-	Go to *Step 12*	-
11	Replace the ECM. Is the action complete?	-	Go to *Step 12*	-

DTC P0113 Intake Air Temperature High Voltage (Cont'd)

Step	Action	Value(s)	Yes	No
12	1. Using the scan tool, clear the Diagnostic Trouble Codes (DTCs). 2. Start the engine and idle at normal operating temperature. 3. Operate the vehicle within the conditions for setting this DTC as specified in the supporting text. Does the scan tool indicate that this diagnostic has run and passed?	-	Go to *Step 13*	Go to *Step 2*
13	Check if any additional DTCs are set. Are any DTCs displayed that have not been diagnosed?	-	Go to applicable DTC table	System OK

BLANK

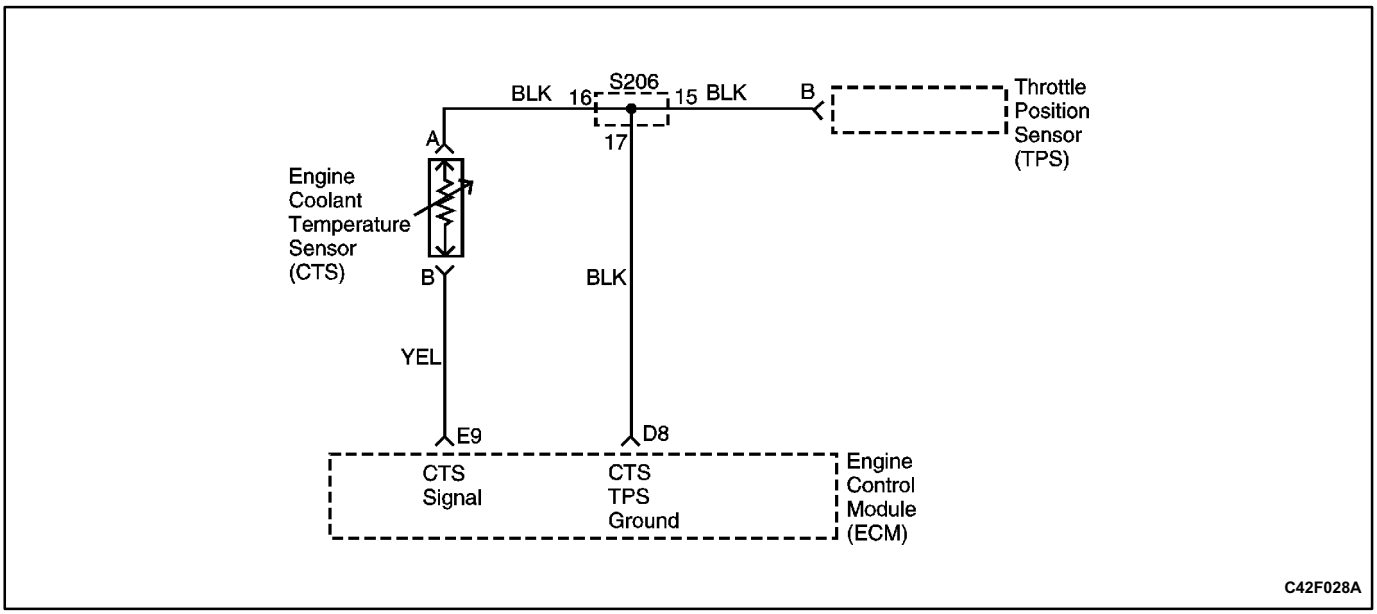

DIAGNOSTIC TROUBLE CODE (DTC) P0117
ENGINE COOLANT TEMPERATURE LOW VOLTAGE

Circuit Description

The Engine Coolant Temperature Sensor (CTS) uses a thermistor to control the signal voltage to the engine control module (ECM). The ECM supplies a voltage on the signal circuit to the sensor. When the air is cold, the resistance is high; therefore the CTS signal voltage will be high.

As the engine warms, the sensor resistance becomes less, and the voltage drops. At normal engine operating temperature, the voltage will be between 1.5 and 2.0 volts at the CTS signal terminal.

The CTS sensor is used to control the following items:

- Fuel delivery.
- Ignition
- Evaporative Emission (EVAP) canister purge valve.
- Idle Air Control (IAC) valve.
- Electric cooling fan.

Conditions for Setting the DTC

- Engine run time is greater than 120 seconds.

Action Taken When the DTC Sets

- The Malfunction Indicator Lamp (MIL) will illuminate.
- The ECM will record operating conditions at the time the diagnostic fails. This information will be stored in the Freeze Frame and Failure Records buffers.
- A history DTC is stored.
- The coolant fan turns on.
- The ECM will default to 20°C (68°F) for the first 60 seconds of engine run time, and then to 92°C (198°F). The scan tool may not show the defaulted value.

Conditions for Clearing the MIL/DTC

- The MIL will turn off after three consecutive ignition cycles in which the diagnostic runs without a fault.
- A history DTC will clear after 40 consecutive warm-up cycles without a fault.
- DTC(s) can be cleared by using the scan tool.

Diagnostic Aids

After the engine has started, the CTS should rise steadily to about 90°C (194°F) then stabilize when the thermostat opens.

Use the Temperature vs. Resistance Values table to evaluate the possibility of a skewed sensor. Refer to Temperature vs. Resistance" in this section.

Test Description

Number(s) below refer to the step number(s) on the Diagnostic Table.

1. The OnBoard Diagnostic (OBD) System Check prompts the technician to complete some basic checks and store the freeze frame and failure records data on the scan tool if applicable. This creates an electronic copy of the data taken when the malfunction occurred. The information is then stored on the scan tool for later reference.
4. This step simulates a DTC P0118 condition. If the ECM senses the change, then the ECM and the CTS wiring are OK.
7. The replacement ECM must be reprogrammed. Refer to the latest Techline procedure for ECM reprogramming.

DTC P0117 Engine Coolant Temperature Low Voltage

Step	Action	Value(s)	Yes	No
1	Perform an OnBoard Diagnostic (OBD) System Check. Is the system check complete?	-	Go to *Step 2*	Go to "OnBoard Diagnostic System Check"
2	1. Turn the ignition switch ON, with the engine OFF. 2. Install a scan tool. Is the engine coolant temperature sensor (CTS) value greater than the specified value?	130°C (266°F)	Go to *Step 4*	Go to *Step 3*
3	1. Turn the ignition switch ON with the engine OFF. 2. Review Freeze Frame data and note the parameters. 3. Operate the vehicle within the Freeze Frame conditions and Conditions for Setting The DTC as noted. Is the CTS sensor value greater than the specified value?	130°C (266°F)	Go to *Step 4*	Go to "Diagnostic Aids"
4	Disconnect the CTS sensor electrical connector. Is the CTS sensor value less than the specified value?	30°C (22°F)	Go to *Step 6*	Go to *Step 5*
5	Check the CTS sensor signal circuit at terminal B for a short to ground and repair as necessary. Is a repair necessary?	-	Go to *Step 8*	Go to *Step 7*
6	Replace the CTS sensor. Is the action complete?	-	Go to *Step 8*	-
7	Replace the engine control module (ECM). Is the action complete?	-	Go to *Step 8*	-
8	1. Using the scan tool, clear the Diagnostic Trouble Codes (DTCs). 2. Start the engine and idle at normal operating temperature. 3. Operate the vehicle within the conditions for setting this DTC as specified in the supporting text. Does the scan tool indicate that this diagnostic ran and passed?	-	Go to *Step 9*	Go to *Step 2*
9	Check if any additional DTCs are set. Are any DTCs displayed that have not been diagnosed?	-	Go to applicable DTC table	System OK

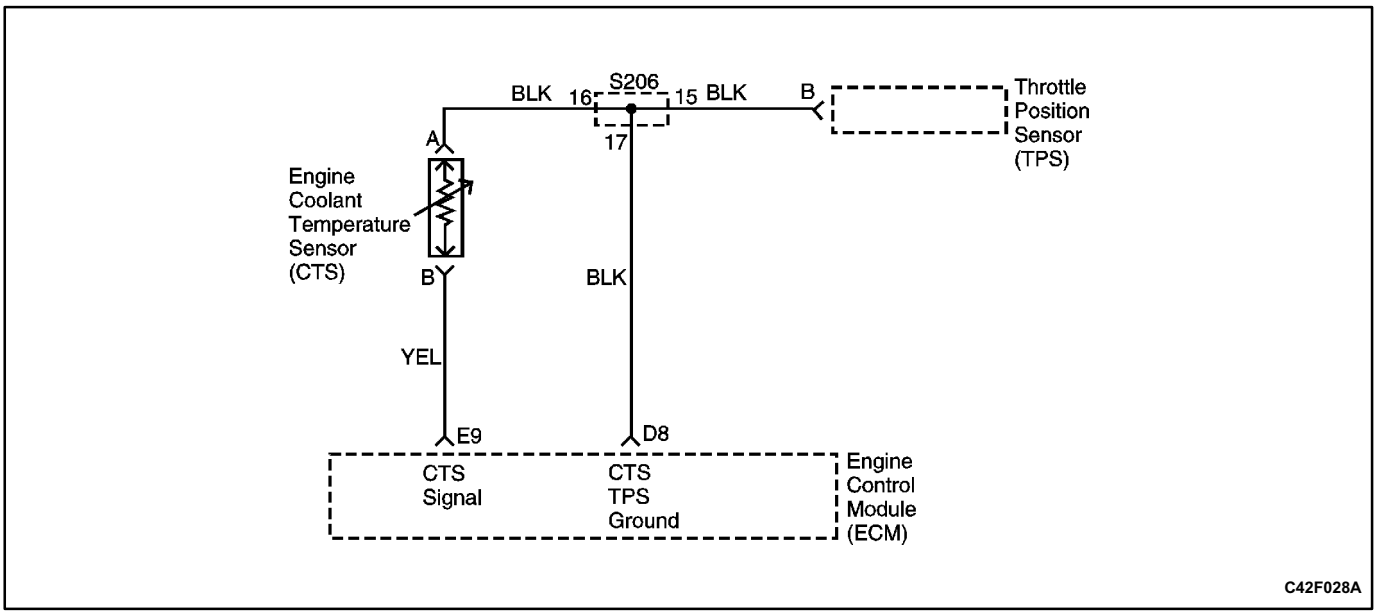

DIAGNOSTIC TROUBLE CODE (DTC) P0118
ENGINE COOLANT TEMPERATURE HIGH VOLTAGE

Circuit Description

The Engine Coolant Temperature Sensor (CTS) uses a thermistor to control the signal voltage to the engine control module (ECM). The ECM supplies a voltage on the signal circuit to the sensor. When the air is cold, the resistance is high; therefore the CTS signal voltage will be high. As the engine warms, the sensor resistance becomes less and the voltage drops. At normal engine operating temperature, the voltage will be between 1.5 and 2.0 volts at the CTS signal terminal.

The CTS sensor is used to control the following items:

- Fuel delivery.
- Ignition.
- Evaporative Emission (EVAP) canister purge valve.
- Idle Air Control (IAC) valve.
- Electric cooling fan.

Conditions for Setting the DTC

- Engine run time is greater 120 seconds.

Action Taken When the DTC Sets

- The Malfunction Indicator Lamp (MIL) will illuminate.
- The ECM will record operating conditions at the time the diagnostic fails. This information will be stored in the Freeze Frame and Failure Records buffers.
- A history DTC is stored.
- Coolant fan turns on.
- The ECM will default to 20°C (68°F) for the first 60 seconds of engine run time, and then to 92°C (198°F). The scan tool may show the defaulted value.

Conditions for Clearing the MIL/DTC

- The MIL will turn off after three consecutive ignition cycles in which the diagnostic runs without a fault.
- A history DTC will clear after 40 consecutive warmup cycles without a fault.
- DTC(s) can be cleared by using the scan tool.

Diagnostic Aids

Normal operating temperature for the engine cooling system is between 90°C (194°F) and 95°C (203°F).

Use the Temperature vs. Resistance Values table to evaluate the possibility of a skewed sensor. Refer to "Temperature vs. Resistance" in this section.

Test Description

Number(s) below refer to the step number(s) on the Diagnostic Table.

1. The On-Board Diagnostic (OBD) System Check prompts the technician to complete some basic checks and store the freeze frame and failure records data on the scan tool if applicable. This creates an electronic copy of the data taken when the malfunction occurred. The information is then stored on the scan tool for later reference.

4. This step simulates a DTC P0117 condition. If the ECM senses the change, then the ECM and the CTS wiring are OK.

11. The replacement ECM must be reprogrammed. Refer to the latest Techline procedure for ECM reprogramming.

DTC P0118 Engine Coolant Temperature High Voltage

Step	Action	Value(s)	Yes	No
1	Perform an OnBoard Diagnostic (OBD) System Check. Is the system check complete?	-	Go to *Step 2*	Go to "OnBoard Diagnostic System Check"
2	1. Turn the ignition switch ON, with the engine OFF. 2. Install a scan tool. Is the Engine Coolant Temperature (CTS) sensor value less than the specified value?	30°C (22°F)	Go to *Step 4*	Go to *Step 3*
3	1. Turn the ignition switch ON with the engine OFF. 2. Review Freeze Frame data and note the parameters. 3. Operate the vehicle within the Freeze Frame conditions and Conditions for Setting The DTC as noted. Is the CTS sensor value less than the specified value?	30°C (22°F)	Go to *Step 4*	Go to "Diagnostic Aids"
4	1. Disconnect the CTS sensor electrical connector. 2. Jumper the CTS sensor signal circuit at terminal B and the CTS sensor ground circuit at terminal A together at the CTS electrical connector. Is the CTS sensor value greater than the specified value?	130°C (266°F)	Go to *Step 6*	Go to *Step 5*
5	Jumper the CTS sensor signal circuit at terminal B to chassis ground. Is the CTS sensor value greater than the specified value?	130°C (266°F)	Go to *Step 7*	Go to *Step 8*
6	Check for poor connections at the CTS sensor and repair as necessary. Is a repair necessary?	-	Go to *Step 12*	Go to *Step 10*
7	Check the CTS sensor ground circuit for an open and repair as necessary. Is a repair necessary?	-	Go to *Step 12*	Go to *Step 9*
8	Check the CTS sensor signal circuit for an open and repair as necessary. Is a repair necessary?	-	Go to *Step 12*	Go to *Step 9*
9	Check for a poor CTS sensor ground circuit at terminal D8 or a poor CTS sensor signal circuit at terminal E9 connection at the engine control module (ECM) and replace the terminals if necessary. Do any of the terminal(s) need to be replaced?	-	Go to *Step 12*	Go to *Step 11*
10	Replace the CTS sensor. Is the action complete?	-	Go to *Step 12*	-
11	Replace the ECM. Is the action complete?	-	Go to *Step 12*	-

DTC P0118 Engine Coolant Temperature High Voltage (Cont'd)

Step	Action	Value(s)	Yes	No
12	1. Using the scan tool, clear the Diagnostic Trouble Codes (DTCs). 2. Start the engine and idle at normal operating temperature. 3. Operate the vehicle within the conditions for setting this DTC as specified in the supporting text. Does the scan tool indicate that this diagnostic ran and passed?	-	Go to *Step 13*	Go to *Step 2*
13	Check if any additional DTCs are set. Are any DTCs displayed that have not been diagnosed?	-	Go to applicable DTC table	System OK

BLANK

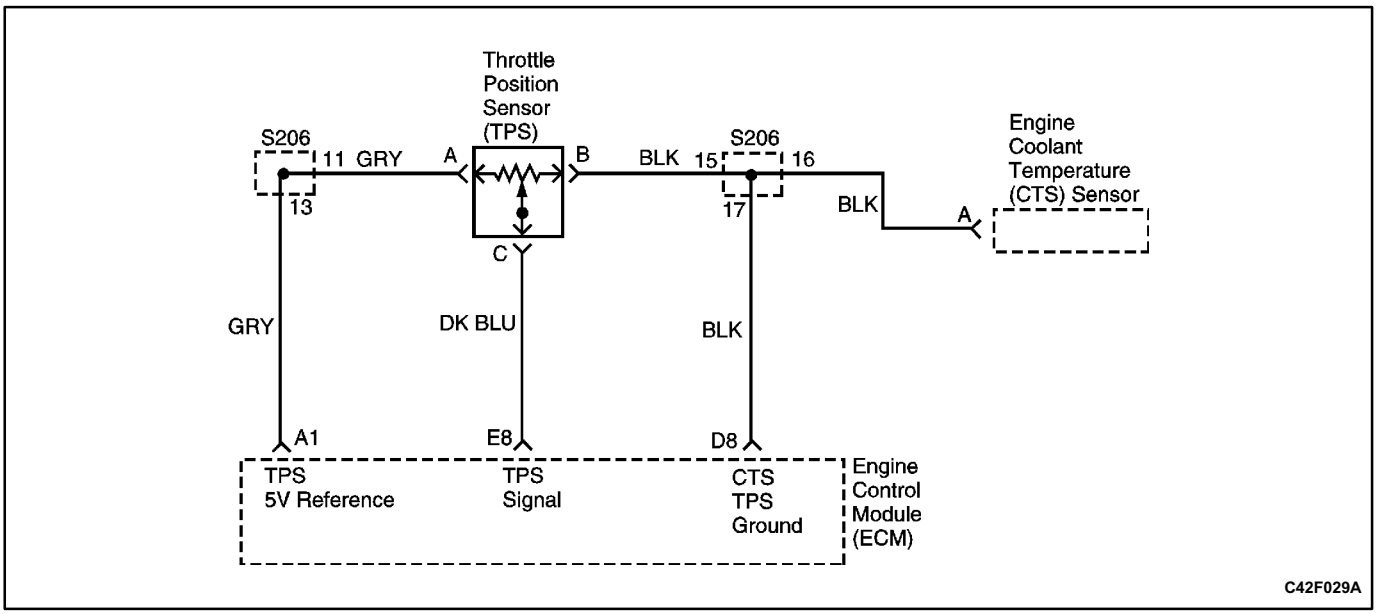

DIAGNOSTIC TROUBLE CODE (DTC) P0122
THROTTLE POSITION SENSOR LOW VOLTAGE

Circuit Description

The engine control module (ECM) supplies a 5 volt reference signal and a ground to the Throttle Position Sensor (TPS). The TPS sends a voltage signal back to the ECM relative to the throttle plate opening. The voltage signal will vary from approximately 0.1 volts at closed throttle, to over 4.9 volts at wide open throttle (WOT).

Conditions for Setting the DTC

- Ignition ON.
- TPS is less than 0.14 v.

Action Taken When the DTC Sets

- The Malfunction Indicator Lamp (MIL) will illuminate.
- The ECM will record operating conditions at the time the diagnostic fails. This information will be stored in the Freeze Frame and Failure Records buffers.
- A history DTC is stored.
- The Coolant fan turns on.
- The TP angle will default to 0% when the vehicle speed is less than 2 mph (3 km/h) and 10% when the vehicle speed is greater than 2 mph (3 km/h). (The scan tool will display the defaulted value.)

Conditions for Clearing the MIL/DTC

- The MIL will turn off after three consecutive ignition cycles in which the diagnostic runs without a fault.
- A history DTC will clear after 40 consecutive warmup cycles without a fault.
- The DTC(s) can be cleared using the scan tool.

Diagnostic Aids

If a DTC P0122 cannot be duplicated, the information included in the Freeze Frame data can be useful. Use the scan tool information data to determine the status of the DTC. If the DTC occurs intermittently, using the Diagnostic table may help isolate the problem.

Test Description

Number(s) below refer to the step number(s) on the Diagnostic Table.

1. The OnBoard Diagnostic (OBD) System Check prompts the technician to complete some basic checks and store the freeze frame and failure records data on the scan tool if applicable. This creates an electronic copy of the data taken when the malfunction occurred. The information is then stored on the scan tool for later reference.
2. The TPS has an auto zeroing feature. If the voltage reading is between 0.2 to 0.9 volts, the ECM will assume the TPS is at a closed throttle position (0%).
4. Simulates a high voltage signal which will identify an open in the signal circuit.
5. If additional DTCs are set, check the 5 volt reference circuits for a short to ground.
6. If the test light illuminates while probing the TP signal circuit, then the TP signal circuit is shorted to ground.
8. The replacement ECM must be reprogrammed. Refer to the latest Techline procedure for ECM reprogramming.
11. If no faults have been found at this point and no additional DTCs were set, refer to "Diagnostic Aids" in this section for additional checks and information.

DTC P0122 Throttle Position Sensor Low Voltage

Step	Action	Value(s)	Yes	No
1	Perform an OnBoard Diagnostic (OBD) System Check. Is the system check complete?	-	Go to *Step 2*	Go to "On-Board Diagnostic System Check"
2	1. Turn the ignition switch ON with the engine OFF. 2. Install a scan tool. Is the throttle position sensor (TPS) voltage below the specified value?	0.2 V	Go to *Step 4*	Go to *Step 3*
3	1. Turn the ignition switch ON, with the engine OFF. 2. Review the Freeze Frame data and note the parameters. 3. Operate the vehicle within the Freeze Frame conditions and Conditions for Setting The DTC as noted. Is the TPS voltage below the specified value?	0.2 V	Go to *Step 4*	Go to *Step 12*
4	1. Disconnect the TPS electrical connector. 2. Jumper the 5 volt reference circuit, terminal A and the TPS signal circuit, terminal C together at the TPS electrical connector. Is the TPS voltage below the specified value.	-	Go to *Step 10*	Go to *Step 5*
5	Connect a test light between B+ and the TPS signal circuit at terminal C. Is the TPS voltage greater than the specified value?	4 V	Go to *Step 6*	Go to *Step 8*
6	Check the 5 volt reference circuit for an open or short to ground and repair as necessary. Is the action complete?	-	Go to *Step 12*	Go to *Step 7*
7	Check the 5 volt reference circuit for a poor connection at the engine control module (ECM), terminal A1 and repair the terminal as necessary. Is the action complete?	-	Go to *Step 12*	Go to *Step 11*
8	Check the TPS signal circuit, terminal E8 for an open or a short to ground and repair as necessary. Is the action complete?	-	Go to *Step 12*	Go to *Step 9*
9	Check the TPS signal circuit, terminal E8 for a poor connection at the ECM and repair as necessary. Is the action complete?	-	Go to *Step 12*	Go to *Step 11*
10	Replace the TPS. Is the action complete?	-	Go to *Step 12*	-
11	Replace the ECM. Is the action complete?	-	Go to *Step 12*	-

DTC P0122 Throttle Position Sensor Low Voltage (Cont'd)

Step	Action	Value(s)	Yes	No
12	1. Using the scan tool, clear the Diagnostic Trouble Codes (DTCs). 2. Start the engine and idle at normal operating temperature. 3. Operate the vehicle within the conditions for setting this DTC as specified in the supporting text. Does the scan tool indicate that this diagnostic ran and passed?	-	Go to *Step 13*	Go to *Step 2*
13	Check if any additional DTCs are set. Are any DTCs displayed that have not been diagnosed	-	Go to applicable DTC table	System OK

BLANK

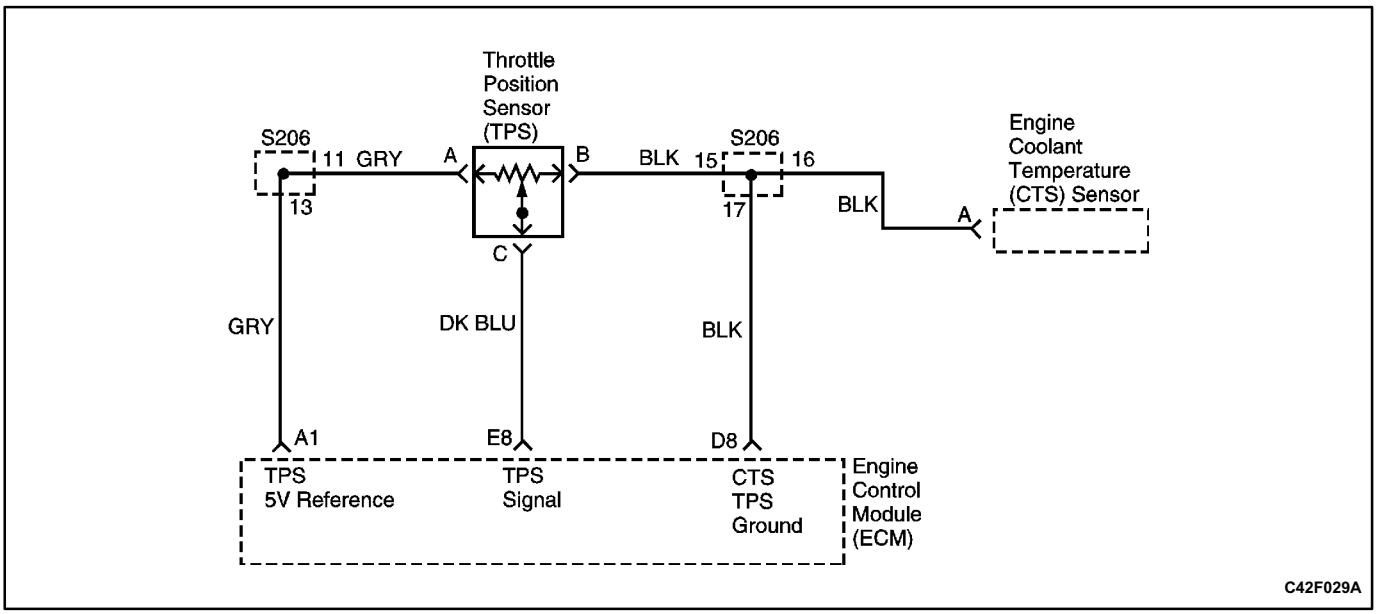

DIAGNOSTIC TROUBLE CODE (DTC) P0123
THROTTLE POSITION SENSOR HIGH VOLTAGE

Circuit Description

The engine control module (ECM) supplies a 5 volt reference signal and a ground to the Throttle Position Sensor (TPS). The TPS sends a voltage signal back to the ECM relative to the throttle plate opening. The voltage signal will vary from approximately 0.1 volts at closed throttle, to over 4.9 volts at wide open throttle (WOT).

Conditions for Setting the DTC

- The ignition is ON.
- TPS voltage is greater than 4.9 v.

Action Taken When the DTC Sets

- The Malfunction Indicator Lamp (MIL) will illuminate.
- The ECM will record operating conditions at the time the diagnostic fails. This information will be stored in the Freeze Frame and Failure Records buffers.
- A history DTC is stored.
- The Coolant fan turns on.
- The TP angle will default to 0% when the vehicle speed is less than 2 mph (3 km/h) and 10% when the vehicle speed is greater than 2 mph (3 km/h). (The scan tool will display the defaulted value.)

Conditions for Clearing the MIL/DTC

- The MIL will turn off after three consecutive ignition cycles in which the diagnostic runs without a fault.
- A history DTC will clear after 40 consecutive warmup cycles without a fault.
- The DTC(s) can be cleared by using the scan tool.

Diagnostic Aids

If a DTC P0123 cannot be duplicated, the information included in the Freeze Frame data can be useful. Use the scan tool information data to determine the status of the DTC. If the DTC occurs intermittently, using the diagnostic table may help isolate the problem.

With the ignition ON and the throttle at closed position, the voltage should read between 0.20 v and 0.90 v and increase steadily to over 4.5 v at WOT.

DTCs P0123 and P0113 stored at the same time could be the result of an open sensor ground circuit.

Test Description

Number(s) below refer to the step number(s) on the Diagnostic Table.

1. The OnBoard Diagnostic (OBD) System Check prompts the technician to complete some basic checks and store the freeze frame and failure records data on the scan tool if applicable. This creates an electronic copy of the data taken when the malfunction occurred. The information is then stored on the scan tool for later reference.
2. With the throttle closed, the TPS voltage should read less than 0.90 v. If the TPS voltage does not read less than 0.90 v, check for a binding or sticking throttle cable.
4. With the TPS disconnected, the TPS voltage should be less than 0.2 v if the ECM and wiring are OK.
5. Probing the ground circuit with a test light checks the circuit for high resistance which will cause a DTC P0123 to set.
7. A shorted 5 volt reference circuit will also set additional DTCs.
11. The replacement ECM must be reprogrammed. Refer to the latest Techline procedure for ECM reprogramming.

DTC P0123 Throttle Position Sensor High Voltage

Step	Action	Value(s)	Yes	No
1	Perform an OnBoard Diagnostic (OBD) System Check. Is the system check performed?	-	Go to *Step 2*	Go to "On-Board Diagnostic System Check"
2	1. Turn the ignition switch ON, with the engine OFF. 2. Install a scan tool. Is the throttle position sensor (TPS) voltage greater than the specified value?	1 V	Go to *Step 4*	Go to *Step 3*
3	1. Turn the ignition switch ON with the engine OFF. 2. Review the Freeze Frame data and note the parameters. 3. Operate the vehicle within the Freeze Frame conditions and Conditions for Setting The DTC as noted. Is the TPS voltage greater than the specified value?	3.9 V	Go to *Step 4*	Go to *Step 12*
4	Disconnect the TPS electrical connector. Is the TPS voltage less than the specified value?	0.2 V	Go to *Step 5*	Go to *Step 6*
5	Probe the TPS ground circuit, terminal B at the TPS harness connector with a test light connected to B+. Does the test light illuminate?	-	Go to *Step 7*	Go to *Step 9*
6	Check the TPS signal circuit, terminal C for a short to voltage and repair as necessary. Is a repair necessary?	-	Go to *Step 12*	Go to *Step 11*
7	Check the 5 v reference circuit, terminal A1 for a short to B+ and repair as necessary. Is a repair necessary?	-	Go to *Step 12*	Go to *Step 8*
8	Check the TPS electrical connector for a poor connection and repair the terminals as necessary. Is a repair necessary?	-	Go to *Step 12*	Go to *Step 10*
9	Check the TPS ground circuit for an open and repair as necessary?. Is a repair necessary?	-	Go to *Step 12*	Go to *Step 11*
10	Replace the TPS. Is the action complete?	-	Go to *Step 12*	-
11	Replace the engine control module (ECM). Is the action complete?	-	Go to *Step 12*	-

DTC P0123 Throttle Position Sensor High Voltage (Cont'd)

Step	Action	Value(s)	Yes	No
12	1. Using the scan tool, clear the Diagnostic Trouble Codes (DTCs). 2. Start the engine and idle at normal operating temperature. 3. Operate the vehicle within the conditions for setting this DTC as specified in the supporting text. Does the scan tool indicate that this diagnostic ran and passed?	-	Go to *Step 13*	Go to *Step 2*
13	Check if any additional DTCs are set. Are any DTCs displayed that have not been diagnosed	-	Go to applicable DTC table	System OK

BLANK

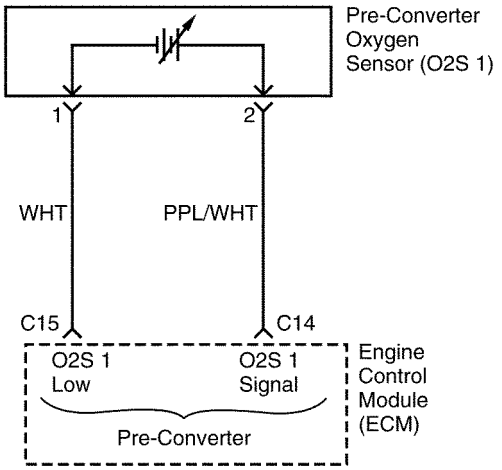

DIAGNOSTIC TROUBLE CODE (DTC) P0131
O2 BANK 1 SENSOR 1 LOW VOLTAGE

Circuit Description

The engine control module (ECM) supplies a voltage of about 0.45 volts between terminals C15 and C14 (if measured with a 10 megohm digital voltmeter, this may read as low as 0.32 volts). The Oxygen Sensor (O2S 1) varies the voltage within a range of about 1 volt if the exhaust is rich, down through about 0.10 volts if the exhaust is lean.

The sensor is like an open circuit and produces no voltage when it is below 315°C (600°F). An open sensor circuit or cold sensor causes Open Loop operation.

If the O2S 1 pigtail wiring, connector, or terminal is damaged, the entire O2S 1 assembly must be replaced. Do not attempt to repair the wiring, connector, or terminals. In order for the sensor to function properly, it must have a clean air reference provided to it. This clean air reference is obtained by way of the O2S 1 wire(s). Any attempt to repair the wires, connector or terminals could result in the obstruction of the air reference and degrade the O2S 1 performance. Refer to "Oxygen Sensor" in this section.

Conditions for Setting the DTC

- O2S 1 voltage is less than 0.1 volts or less than 0.4 volts in Power Enrichment (PE).
- Closed loop stoichiometry.
- Engine coolant temperature (CTS) is greater than 60°C (140°F).
- Air/fuel ratio is between 14.5:1 and 14.8:1.
- Throttle Position Sensor (TPS) is between 5% and 50%.
- No related malfunctions.
- Delay 2 seconds.
- After conditions met.

Action Taken When the DTC Sets

- The Malfunction Indicator Lamp (MIL) will illuminate.
- The ECM will record operating conditions at the time the diagnostic fails. This information will be stored in the Freeze Frame and Failure Records buffers.
- A history DTC is stored.
- The coolant fan turns on.
- The vehicle will operate in Open Loop.

Conditions for Clearing the MIL/DTC

- The MIL will turn off after three consecutive ignition cycles in which the diagnostic runs without a fault.
- A history DTC will clear after 40 consecutive warmup cycles without a fault.
- The DTC(s) can be cleared by using the scan tool.

Diagnostic Aids

Fuel pressure - The system will be lean if the fuel pressure is too low. It may be necessary to monitor the fuel pressure while driving the vehicle at various road speeds and/or loads to confirm. Refer to "Fuel System Diagnosis" in this section.

MAP sensor - An output that causes the ECM to sense a lower than normal manifold pressure (high vacuum) can cause the system to go lean. Disconnecting the Manifold Absolute Pressure (MAP) sensor will allow the ECM to substitute a fixed (default) value for the MAP sensor. If the lean condition is gone when the sensor is disconnected, substitute a known good sensor and recheck.

Fuel contamination - Water, in even small amounts near the intank fuel pump inlet can be delivered to the

injector. The water causes a lean exhaust and can set DTC P0131.

Sensor harness - The O2S 1 sensor pigtail may be mispositioned and contacting the exhaust manifold.

Engine misfire - A misfiring cylinder will result in unburned oxygen in the exhaust, which could cause DTC P0131 to set. Refer to DTC P0300 Engine Misfire in this section.

Cracked Oxygen sensor - A cracked O2S 1 or poor ground at the sensor could cause DTC P0131. Refer to "Symptoms Diagnosis" in this section.

Plugged fuel filter - A plugged fuel filter can cause a lean condition and cause a DTC P0131 to set.

Plugged Oxygen Sensor - A plugged reference port on the O2S 1 will indicate a lowerthannormal voltage output from the O2S 1.

Test Description

Number(s) below refer to the step number(s) on the Diagnostic Table.

1. The On-Board Diagnostic (OBD) System Check prompts the technician to complete some basic checks and store the freeze frame and failure records data on the scan tool if applicable. This creates an electronic copy of the data taken when the malfunction occurred. The information is then stored on the scan tool for later reference.
2. This step determines if DTC P0131 is the result of a hard failure or an intermittent condition. It may be necessary to operate the vehicle within the Freeze Frame conditions and Conditions for Setting the DTC in order to duplicate the malfunction detected by the ECM.
4. This step simulates DTC P0134. If the ECM senses the change, the ECM and the wiring are OK.
6. The replacement ECM must be reprogrammed. Refer to the latest Techline procedure for ECM reprogramming.
8. If no malfunctions have been found at this point and no additional DTCs were set, refer to "Diagnostic Aids" for additional checks and information.

DTC P0131 O2 Bank 1 Sensor 1 Low Voltage

Step	Action	Value(s)	Yes	No
1	Perform an OnBoard Diagnostic (OBD) System Check. Is the system check complete?	-	Go to *Step 2*	Go to "OnBoard Diagnostic System Check"
2	1. Turn the ignition ON with the engine OFF. 2. Install a scan tool. 3. Engine at operating temperature. Does the Oxygen Sensor (O2S 1) voltage remain below the specified value?	44 mV	Go to *Step 4*	Go to *Step 3*
3	1. Review the Freeze Frame data and note the parameters. 2. Operate the vehicle within the Freeze Frame conditions and Conditions For Setting The DTC as noted? Does the O2S 1 voltage stay below the specified value?	44 mV	Go to *Step 4*	Go to *Step 7*
4	1. Turn the ignition switch ON, with the engine OFF. 2. Disconnect the O2S 1 electrical connector. Does the scan tool indicate the O2S 1 voltage within the specified values?	407-509 mV	Go to "Diagnostic Aids"	Go to *Step 5*
5	Check the O2S 1 sensor signal circuit, terminal 2 for a short to ground and repair as necessary. Is a repair necessary.	-	Go to *Step 7*	Go to *Step 6*
6	Replace the engine control module (ECM). Is the action complete?	-	Go to *Step 7*	-
7	1. If disconnected, reconnect the O2S 1 electrical connector. 2. Using the scan tool, clear the Diagnostic Trouble Codes (DTCs). 3. Start the engine and idle at normal operating temperature. 4. Operate the vehicle within the conditions for setting this DTC as specified in the supporting text. Does the scan tool indicate that this diagnostic ran and passed?	-	Go to *Step 8*	Go to *Step 2*
8	Check if any additional DTCs are set. Are any DTCs displayed that have not been diagnosed?	-	Go to applicable DTC table	System OK

BLANK

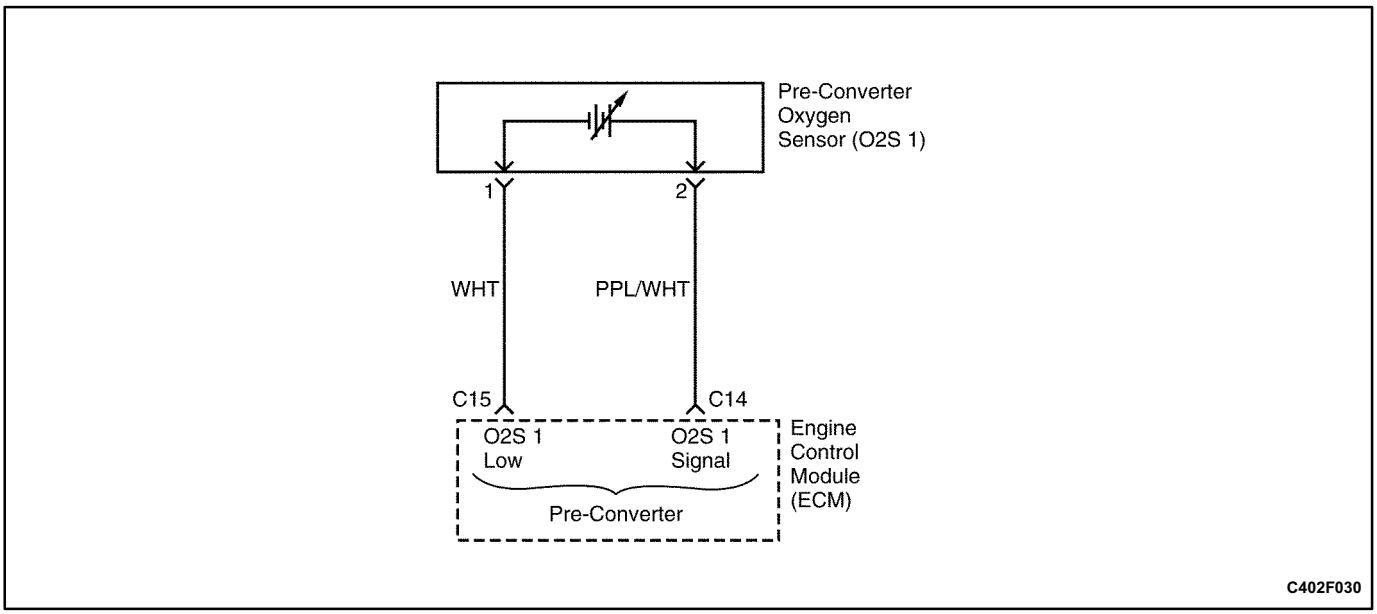

DIAGNOSTIC TROUBLE CODE (DTC) P0132
O2 BANK 1 SENSOR 1 HIGH VOLTAGE

Circuit Description

The engine control module (ECM) supplies a voltage of about 0.45 volts between terminals C15 and C14 (if measured with a 10 megohm digital voltmeter, this may read as low as 0.32 volts). The Oxygen Sensor (O2S 1) varies the voltage within a range of about 1 volt if the exhaust is rich, down through about 0.10 volts if the exhaust is lean.

The sensor is like an open circuit and produces no voltage when it is below 315°C (600°F). An open sensor circuit or cold sensor causes Open Loop operation.

If the O2S 1 pigtail wiring, connector, or terminal is damaged, the entire O2S 1 assembly must be replaced. Do not attempt to repair the wiring, connector, or terminals. In order for the sensor to function properly, it must have a clean air reference provided to it. This clean air reference is obtained by way of the O2S 1 wire(s). Any attempt to repair the wires, connector, or terminals could result in the obstruction of the air reference and degrade the O2S 1 performance. Refer to Oxygen Sensor" in this section.

Conditions for Setting the DTC

- O2S 1 voltage is less than 0.952 volts or greater than 0.448 volts in Decel Fuel Cutoff (DFCO) mode.
- Closed loop stoichiometry.
- Engine coolant temperature (CTS) is greater than 60°C (140°F).
- Air/fuel ratio is between 14.5:1 and 14.8:1.
- Throttle Position Sensor (TPS) is between 0% and 95%.
- No related malfunctions.
- 2 second delay in decel for DFCO.
- 2 second delay for closed loop.

Action Taken When the DTC Sets

- The Malfunction Indicator Lamp (MIL) will illuminate.
- The ECM will record operating conditions at the time the diagnostic fails. This information will be stored in the Freeze Frame and Failure Records buffers.
- A history DTC is stored.
- The coolant fan turns on.
- The vehicle will operate in Open Loop.

Conditions for Clearing the MIL/DTC

- The MIL will turn off after three consecutive ignition cycles in which the diagnostic runs without a fault.
- A history DTC will clear after 40 consecutive warmup cycles without a fault.
- DTC(s) can be cleared by using the scan tool.

Diagnostic Aids

The DTC P0132 or rich exhaust is most likely caused by one of the following items:

Fuel pressure - System will go rich if fuel pressure is too high. The ECM can compensate for some increase, but if it gets too high, a DTC P0132 will be set.

Leaking injector - A leaking or malfunctioning injector can cause the system to go rich causing a DTC P0132.

Manifold absolute pressure (MAP) sensor - An output that causes the ECM to sense a higher than normal manifold pressure (low vacuum) can cause the system to go rich. Disconnecting the MAP sensor will allow the ECM to substitute a fixed value for the MAP sensor. Substitute a different a MAP sensor, if the rich condition is gone while the sensor is disconnected.

Pressure regulator - Check for a leaking fuel pressure regulator diaphragm by checking for the presence of liquid fuel in the vacuum line to the regulator.

TPS - An intermittent TPS output will cause the system to go rich due to a false indication of the engine accelerating.

O2S 1 contamination - Inspect the O2S 1 for silicone contamination from fuel or the use of improper room temperature vulcanizing (RTV) sealant. The sensor may have a white powdery coating which may result in a high but false voltage signal (rich exhaust indication). The ECM will then reduce the amount of fuel delivered to the engine, causing a severe surge or driveability problem.

Test Description

Number(s) below refer to the step number(s) on the Diagnostic Table.

1. The OnBoard Diagnostic (OBD) System Check prompts the technician to complete some basic checks and store the freeze frame and failure records data on the scan tool if applicable. This creates an electronic copy of the data taken when the malfunction occurred. The information is then stored on the scan tool for later reference.
2. This step determines if DTC P0132 is the result of a hard failure or an intermittent condition. It may be necessary to operate the vehicle within the Freeze Frame conditions and Conditions for Setting the DTC in order to duplicate the malfunction detected by the ECM.
4. This step simulates a DTC P0131. If the ECM senses the change, the ECM and the wiring are OK.
6. The replacement ECM must be programmed. Refer to the latest Techline procedure for ECM reprogramming.
8. If no malfunctions have been found at this point and no additional DTCs were set, refer to "Diagnostic Aids" in this section for additional checks and information.

DTC P0132 O2 Bank 1 Sensor 1 High Voltage

Step	Action	Value(s)	Yes	No
1	Perform an OnBoard Diagnostic (OBD) System Check. Is the system check complete?	-	Go to *Step 2*	Go to "OnBoard Diagnostic System Check"
2	1. With the ignition ON and the engine OFF, install a scan tool. 2. Engine at operating temperature. Does the oxygen sensor (O2S 1) voltage remain above the specified value?	1042 mV	Go to *Step 4*	Go to *Step 3*
3	1. Review the Freeze Frame data and note the parameters. 2. Operate the vehicle within the Freeze Frame conditions and Conditions For Setting The DTC as noted? Does the O2S 1 voltage stay Above the specified value?	1042 mV	Go to *Step 4*	Go to *Step 8*
4	1. Disconnect the O2S 1 electrical connector. 2. Jumper the O2S 1 electrical connector (engine control module [ECM] side) to ground. Does the scan tool indicate the O2S 1 voltage below the specified value?	500 mV (0.50 V)	Go to "Diagn-stic Aids"	Go to *Step 5*
5	Check the O2S 1 sensor signal circuit, terminal 2 for a short to voltage and repair as necessary. Is a repair necessary.	-	Go to *Step 7*	Go to *Step 6*
6	Replace the ECM. Is the action complete?	-	Go to *Step 7*	-
7	1. If disconnected, reconnect the O2S 1 electrical connector. 2. Using the scan tool, clear the Diagnostic Trouble Codes (DTCs). 3. Start the engine and idle at normal operating temperature. 4. Operate the vehicle within the conditions for setting this DTC as specified in the supporting text. Does the scan tool indicate that this diagnostic ran and passed?	-	Go to *Step 8*	Go to *Step 2*
8	Check if any additional DTCs are set. Are any DTCs displayed that have not been diagnosed?	-	Go to applicable DTC table	System OK

BLANK

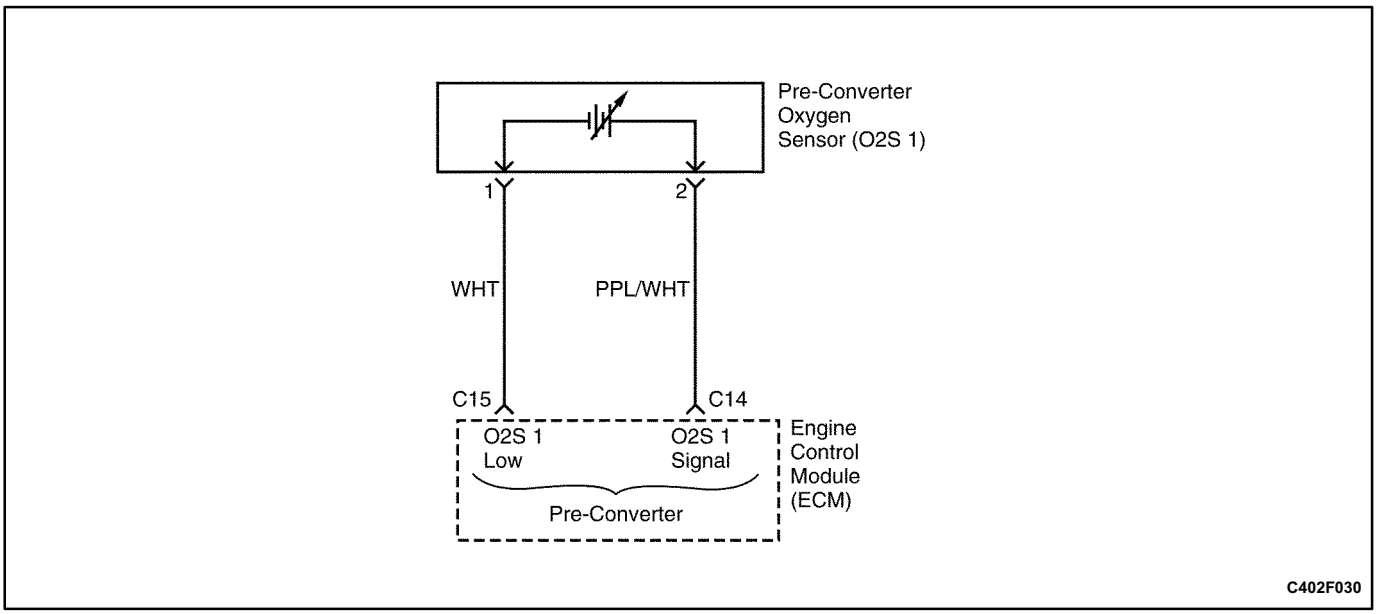

DIAGNOSTIC TROUBLE CODE (DTC) P0134
O2 BANK 1 SENSOR 1 NO ACTIVITY

Circuit Description

The engine control module (ECM) supplies a voltage of about 0.45 volts between terminals C14 and C15 (if measured with a 10 megohm digital voltmeter, this may read as low as 0.32 volts). The Oxygen Sensor (O2S 1) varies the voltage within a range of about 1 volt if the exhaust is rich, down through about 0.10 volts if the exhaust is lean.

The sensor is like an open circuit and produces no voltage when it is below 315°C (600°F). An open sensor circuit or cold sensor causes Open Loop operation.

If the O2S 1 pigtail wiring, connector, or terminal is damaged, the entire O2S 1 assembly must be replaced. Do not attempt to repair the wiring, connector, or terminals. In order for the sensor to function properly, it must have a clean air reference provided to it. This clean air reference is obtained by way of the O2S 1 wire(s). Any attempt to repair the wires, connector, or terminals could result in the obstruction of the air reference and degrade the O2S 1 performance. Refer to Oxygen Sensor" in this section.

Conditions for Setting the DTC

- O2S 1 voltage is between 374 mv and 522 mv.
- Engine run time is greater than 60 seconds.
- No related malfunctions.
- Oxygen sensor nat heated.

Action Taken When the DTC Sets

- The Malfunction Indicator Lamp (MIL) will illuminate.
- The ECM will record operating conditions at the time the diagnostic fails. This information will be stored in the Freeze Frame and Failure Records buffers.
- A history DTC is stored.
- The coolant fan turns on.
- The vehicle will operate in Open Loop.

Conditions for Clearing the MIL/DTC

- The MIL will turn off after three consecutive ignition cycles in which the diagnostic runs without a fault.
- A history DTC will clear after 40 consecutive warmup cycles without a fault.
- The DTC(s) can be cleared by using the scan tool.

Diagnostic Aids

Normal scan tool voltage varies between 150 mv to 850 mv (0.15 volts to 0.85 volts) while in Closed Loop. If DTC P0134 is intermittent, refer to Intermittents" in this section.

Test Description

Number(s) below refer to the step number(s) on the Diagnostic Table.

1. The OnBoard Diagnostic (OBD) System Check prompts the technician to complete some basic checks and store the freeze frame and failure records data on the scan tool if applicable. This creates an electronic copy of the data taken when the malfunction occurred. The information is then stored on the scan tool for later reference.
2. During engine warm-up, the O2S 1 should warm up, and its voltage output should vary between 150 mv and 850 mv. When the O2S 1 voltage varies, the engine will go into Closed Loop. This determines if the O2S 1 is operating properly.
4. This will determine if the sensor is malfunctioning or the wiring or ECM is the cause of the DTC P0134.
6. Use only a high impedance digital voltmeter (DVM) for this test. The test checks the continuity of the O2S 1 signal and the ground circuits; if the ground circuit is open, the ECM voltage on the circuit will be over 0.6 volts (600 mv).

DTC P0134 O2 Bank 1 Sensor 1 No Activity

Step	Action	Value(s)	Yes	No
1	Perform an OnBoard Diagnostic (OBD) System Check. Is the system check complete?	-	Go to *Step 2*	Go to "On-Board Diagnostic System Check"
2	1. Run the engine to above the specified operating temperature. 2. Install a scan tool. 3. Operate the engine above the specified rpm for 2 minutes. Does the scan tool indicate CLOSED LOOP?	80°C (176°F) 1200 rpm	Go to *Step 3*	Go to *Step 4*
3	1. Turn the ignition ON, with the engine OFF. 2. Review the Freeze Frame data and note the parameters. 3. Operate the vehicle within the Freeze Frame conditions and Conditions For Setting The DTC as noted? Does the scan tool indicate CLOSED LOOP?	-	Go to *Step 12*	Go to *Step 4*
4	Disconnect the O2S 1 electrical connector and jumper the O2S 1 sensor low circuit, terminal 1 to ground. Is the O2S 1 voltage below the specified value and does the scan tool indicate the Heated oxygen sensor (HO2S 2) voltage within the specified value?	500 mV (0.5 V)	Go to *Step 5*	Go to *Step 6*
5	Check the O2S 1 electrical connector (engine control module [ECM] side) for malfunctioning terminals or poor connection and repair as necessary. Is a repair necessary.	-	Go to *Step 12*	Go to *Step 9*
6	1. Turn the ignition switch ON with the engine OFF. 2. Remove the jumper wire. 3. Using a digital voltmeter (DVM), measure the voltage between the O2S 1 sensor signal circuit, terminal C14 and the ground. Does the O2S 1 voltage measure above the specified value?	600 mV (0.6 V)	Go to *Step 10*	Go to *Step 7*
7	Does the O2S 1 voltage measure below the specified value?	300 mV (0.3 V)	Go to *Step 11*	Go to *Step 8*
8	Replace the ECM. Is the action complete?	-	Go to *Step 12*	-
9	Replace the O2S 1 sensor. Is the action complete?	-	Go to *Step 12*	-
10	Check the O2S 1 sensor ground circuit, terminal C15 for an open or poor connection and repair as necessary. Is a repair necessary?	-	Go to *Step 12*	Go to *Step 8*

DTC P0134 O2 Bank 1 Sensor 1 No Activity (Cont'd)

Step	Action	Value(s)	Yes	No
11	Check the O2S 1 sensor signal circuit, terminal C14 for an open or poor connection and repair as necessary. Is a repair necessary?	-	Go to *Step 12*	Go to *Step 8*
12	1. If disconnected, reconnect the O2S 1 electrical connector. 2. Using the scan tool, clear the Diagnostic Trouble Codes (DTCs). 3. Start the engine and idle at normal operating temperature. 4. Operate the vehicle within the conditions for setting this DTC as specified in the supporting text. Does the scan tool indicate that this diagnostic has run and passed?	-	Go to *Step 13*	Go to *Step 2*
13	Check if any additional DTCs are set. Are any DTCs displayed that have not been diagnosed?	-	Go to applicable DTC table	System OK

BLANK

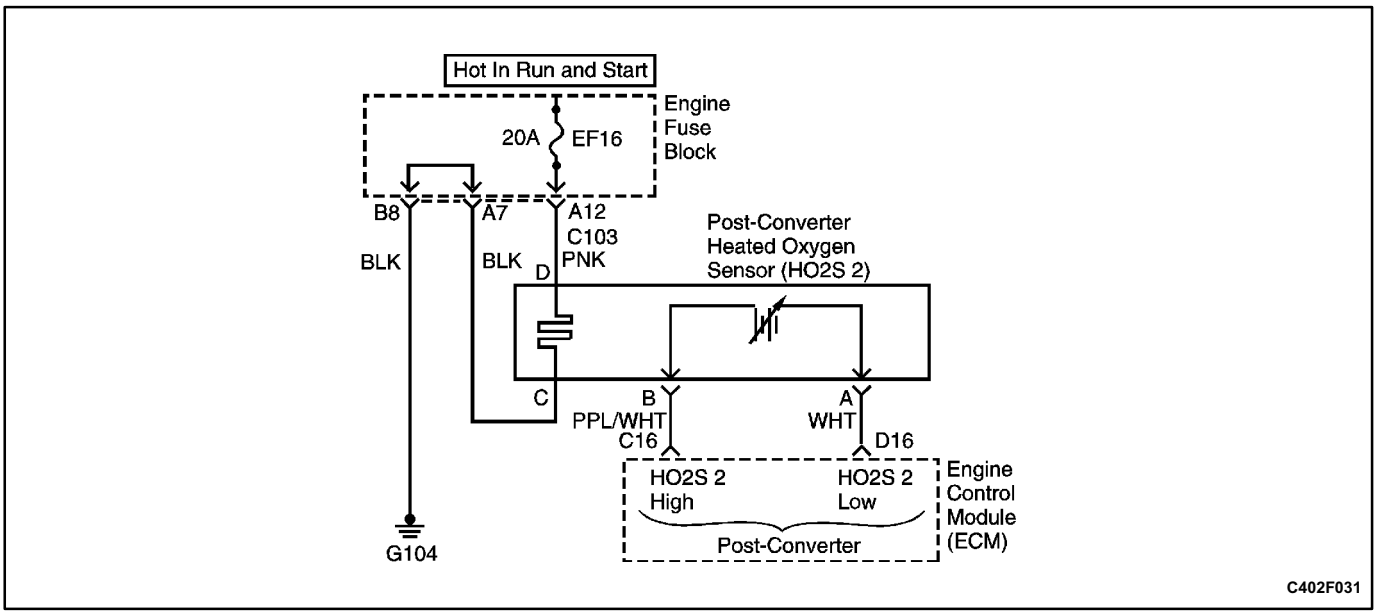

DIAGNOSTIC TROUBLE CODE (DTC) P0137
O2 BANK 1 SENSOR 2 LOW VOLTAGE

Circuit Description

In order to control emissions, a catalytic converter is used to convert harmful emissions into harmless water vapor and carbon dioxide.

The engine control module (ECM) has the ability to monitor this process by using a Heated Oxygen Sensor (HO2S 2). The HO2S 2, located in the exhaust stream past the catalytic converter, produces an output signal which indicates the storage capacity of the catalyst; this in turn indicates the catalyst's ability to convert exhaust emissions effectively. If the catalyst is functioning properly, the HO2S 2 signal will be far less active than the signal produced by the Oxygen Sensor (O2S 1).

If the HO2S 2 pigtail wiring, connector, or terminal is damaged, the entire HO2S 2 assembly must be replaced. Do not attempt to repair the wiring, connector, or terminals. In order for the sensor to function properly, it must have a clean air reference provided to it. This clean air reference is obtained by way of the HO2S 2 wire(s). Any attempt to repair the wires, connector, or terminals could result in the obstruction of the air reference and degrade the HO2S 2 performance.

Conditions for Setting the DTC

- O2S 2 voltage is less than 0.05 volt or less than 0.4 volt in Power Enrichment (PE) mode.
- Closed Loop stoichiometry.
- Engine coolant temperature (CTS) is greater than 60°C (140°F).
- Air/fuel ratio is between 14.5:1 and 14.8:1.
- Throttle Position Sensor (TPS) is between 5% and 50% or in PE mode.
- 2 second delay after the conditions have been met.

Action Taken When the DTC Sets

- The Malfunction Indicator Lamp (MIL) will illuminate.
- The ECM will record operating conditions at the time the diagnostic fails. This information will be stored in the Freeze Frame and Failure Records buffers.
- A history DTC is stored.
- The coolant fan turns on.

Conditions for Clearing the MIL/DTC

- The MIL will turn off after three consecutive ignition cycles in which the diagnostic runs without a fault.
- A history DTC will clear after 40 consecutive warmup cycles without a fault.
- The DTC(s) can be cleared by using the scan tool.

Diagnostic Aids

An intermittent may be caused by rubbedthrough wire insulation or a wire contacting the exhaust.

Check for the following conditions:

- Exhaust system - Inspect the exhaust system for leaks. Check the exhaust between the threeway catalytic converter and the flange for leaks, corrosion, or for loose or missing hardware and repair as necessary.
- Poor connection or damaged harness - Ensure that the HO2S 2 pigtail is not contacting the exhaust. Check for the following conditions:
  - Improper mating
  - Broken locks
  - Improperly formed
  - Damaged terminals
  - Poor terminal-to-wire connection
  - Damaged harness
- Intermittent test - Observe the HO2S 2 on the scan tool while moving related connections and the wiring harness with the ignition ON. If the failure is induced,

the HO2S 2 display will change. This may help isolate the location of the malfunction.

Test Description

Number(s) below refer to the step number(s) on the Diagnostic Table.

1. The OnBoard diagnostic (OBD) System Check prompts the technician to complete some basic checks and store the freeze frame and failure records data on the scan tool if applicable. This creates an electronic copy of the data taken when the malfunction occurred. The information is then stored on the scan tool for later reference.
2. This step determines if DTC P0137 is the result of a hard failure or an intermittent condition.
4. Jumping the HO2S 2 high circuit, terminal B to ground is necessary to allow the ECM to display the supplied bias voltage. If the voltage is between 0.35 and 0.55 volts, then the wiring and the are OK.
6. The replacement ECM must be reprogrammed. Refer to the latest Techline procedure for reprogramming.

DTC P0137 O2 Bank 1 Sensor 2 Low Voltage

Step	Action	Value(s)	Yes	No
1	Perform an OnBoard Diagnostic (OBD) System Check. Is the system check complete?	-	Go to *Step 2*	Go to "OnBoard Diagnostic System Check"
2	1. Turn the ignition ON, with the engine OFF. 2. Install a scan tool. Is the heated oxygen sensor (HO2S 2) voltage less than the specified value?	200 mV (0.20 V)	Go to *Step 4*	Go to *Step 3*
3	1. Turn the ignition ON with the engine OFF. 2. Review the Freeze Frame data and note the parameters. 3. Operate the vehicle within the Freeze Frame conditions and Conditions For Setting The DTC as noted? Is the HO2S 2 voltage less than the specified value?	400 mV (0.40 V)	Go to *Step 4*	Go to *Step 8*
4	1. Disconnect the HO2S 2 electrical connector 2. Connect a jumper wire between HO2S 2 terminal B and ground. Does the scan tool indicate that the HO2S 2 voltage is within the specified value?	350 mV-550 mv (0.35 V-0.55 V)	Go to *Step 7*	Go to *Step 5*
5	1. Turn the ignition switch OFF. 2. Disconnect the engine control module (ECM) electrical connectors and check the HO2S 2 high circuit, terminal C16 for a short to ground or short to the HO2S 2 low circuit terminal D16 and repair as necessary. Is a repair necessary?	-	Go to *Step 8*	Go to *Step 6*
6	Replace the ECM. Is the action complete?	-	Go to *Step 8*	-
7	Replace the HO2S 2. Is the action complete?	-	Go to *Step 8*	-
8	1. Using the scan tool, clear the Diagnostic Trouble Codes (DTCs). 2. Start the engine and idle at normal operating temperature. 3. Operate the vehicle within the Conditions for Setting the DTC as specified in the supporting text. Does the scan tool indicate that this diagnostic has ran and passed?	-	Go to *Step 9*	Go to *Step 2*
9	Check if any additional DTCs are set. Are any DTCs displayed that have not been diagnosed?	-	Go to applicable DTC table	System OK

BLANK

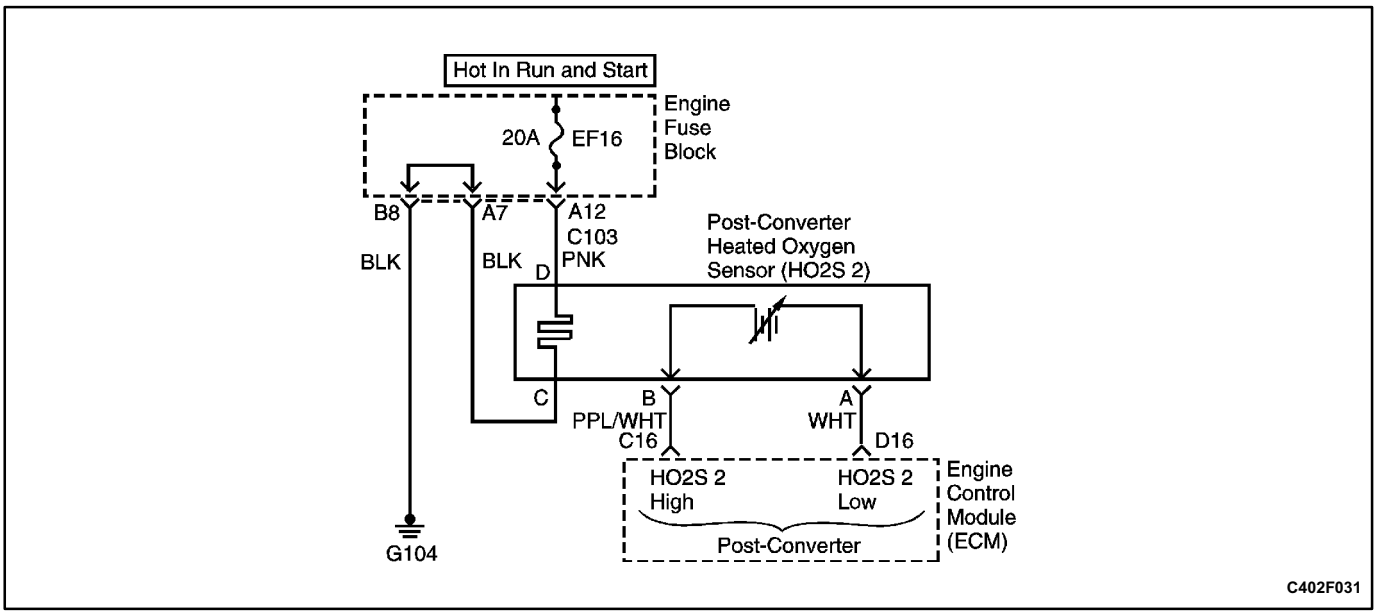

DIAGNOSTIC TROUBLE CODE (DTC) P0138
O2 BANK 1 SENSOR 2 HIGH VOLTAGE

Circuit Description

In order to control emissions, a catalytic converter is used to convert harmful emissions into harmless water vapor and carbon dioxide.

The engine control module (ECM) has the ability to monitor this process by using a Heated Oxygen Sensor (HO2S 2). The HO2S 2, located in the exhaust stream past the catalytic converter, produces an output signal which indicates the storage capacity of the catalyst. This in turn indicates the catalyst's ability to convert exhaust emissions effectively. If the catalyst is functioning properly, the HO2S 2 signal will be far less active than the signal produced by the Oxygen Sensor (O2S 1).

If the HO2S 2 pigtail wiring, connector, or terminal is damaged, the entire HO2S 2 assembly must be replaced. Do not attempt to repair the wiring, connector, or terminals. In order for the sensor to function properly, it must have a clean air reference provided to it. This clean air reference is obtained by way of the HO2S 2 wire(s). Any attempt to repair the wires, connector, or terminals could result in the obstruction of the air reference and degrade the HO2S 2 performance.

Conditions for Setting the DTC

- HO2S voltage is above than 0.952 volt or above than 0.478 volt in Decel Fuel Cutoff (DFCO) mode.
- Closed loop stoichiometry.
- Engine coolant temperature (CTS) is greater than 60°C (140°F).
- Air/fuel ratio is between 14.5:1 and 14.8:1.
- Throttle Position Sensor (TPS) is between 0% and 95% or in Decel Fuel Cutoff (DFCO) mode.
- 2 second delay in DFCO.
- 0.2 second delay after conditions are met in closed loop.

Action Taken When the DTC Sets

- The Malfunction Indicator Lamp (MIL) will illuminate.
- The ECM will record operating conditions at the time the diagnostic fails. This information will be stored in the Freeze Frame and Failure Records buffers.
- A history DTC is stored.
- The coolant fan turns on.

Conditions for Clearing the MIL/DTC

- The MIL will turn off after three consecutive ignition cycles in which the diagnostic runs without a fault.
- A history DTC will clear after 40 consecutive warmup cycles without a fault.
- The DTC(s) can be cleared by using the scan tool.

Diagnostic Aids

- Rich exhaust - An overly rich exhaust may load the catalyst, causing high HO2S 2 signal voltages.
- Silicone contamination - A false rich condition may be caused by silicone contamination of the HO2S 2. This will be indicated by a powdery white deposit on the sensor.
- Faulty HO2S 2 - If HO2S 2 is internally shorted, the HO2S 2 voltage displayed on a scan tool will be over 1 volt. Disconnect the HO2S 2 and jumper the sensor low circuit to engine ground; if the displayed voltage goes from over 1000 mv to around 450 mv, replace the HO2S 2.
- Intermittent test - Observe HO2S 2 on Tech 1 while moving related connectors and the wiring harness with the key in the ON position. If the failure is induced, the HO2S 2 display will change. This may help isolate the location of the malfunction.

Test Description

Number(s) below refer to the step number(s) on the Diagnostic Table.

1. The OnBoard Diagnostic (OBD) System Check prompts the technician to complete some basic checks and to store the freeze frame and failure records data on the scan tool if applicable. This creates an electronic copy of the data taken when the malfunction occurred. The information is then stored on the scan tool for later reference.
2. This step determines if DTC P0138 is the result of a hard failure or an intermittent condition.
5. Disconnecting the HO2S 2 and jumpering the sensor signal circuit and the sensor low circuit to ground should cause the scan tool to display HO2S 2 voltage below 100 mv (0.1 v). If the signal voltage is still high, the ECM is malfunctioning.
8. The replacement ECM must be reprogrammed. Refer to the latest Techline procedure for ECM reprogramming.

DTC P0138 O2 Bank 1 Sensor 2 High Voltage

Step	Action	Value(s)	Yes	No
1	Perform an On-Board Diagnostic (OBD) System Check. Is the system check complete?	-	Go to *Step 2*	Go to "On-Board Diagnostic System Check"
2	1. Turn the ignition ON with the engine OFF. 2. Install a scan tool. Is the heated oxygen sensor (HO2S 2) voltage above the specified value?	1042 mV (1.042 V)	Go to *Step 4*	Go to *Step 3*
3	1. Turn the ignition ON with the engine OFF. 2. Review the Freeze Frame data and note the parameters. 3. Operate the vehicle within the Freeze Frame conditions and Conditions For Setting The DTC as noted. Is the HO2S 2 voltage above the specified value?	1042 mV (1.042 V)	Go to *Step 4*	Go to *Step 9*
4	1. Turn the ignition switch OFF. 2. Disconnect the HO2S 2 electrical connector. 3. Disconnect the engine control module (ECM) electrical connector. 4. With a digital voltmeter (DVM) connected to ground, probe the HO2S 2 high signal circuit, terminal C16. Does the DVM indicate a voltage of the specified value?	0 V (±0.5 V)	Go to *Step 5*	Go to *Step 6*
5	1. Reconnect the ECM electrical connectors. 2. Turn the ignition switch ON, with the engine OFF. 3. Jumper the high and low circuits at the HO2S 2 electrical connector, terminals A and B to ground. Does the scan tool indicate the HO2S 2 voltage below the specified value?	100 mV (0.10 V)	Go to *Step 7*	Go to *Step 8*
6	Repair the short to voltage in the HO2S 2 high circuit. Is the action complete?	-	Go to *Step 9*	-
7	Replace the HO2S 2. Is the action complete?	-	Go to *Step 9*	-
8	Replace the ECM. Is the action complete?	-	Go to *Step 9*	-
9	1. Using the scan tool, clear the Diagnostic Trouble Codes (DTCs). 2. Start the engine and idle at normal operating temperature. 3. Operate the vehicle within the Conditions for setting this DTC as specified in the supporting text. Does the scan tool indicate that this diagnostic has run and passed?	-	Go to *Step 10*	Go to *Step 2*
10	Check if any additional DTCs are set. Are any DTCs displayed that have not been diagnosed?	-	Go to applicable DTC table	System OK

BLANK

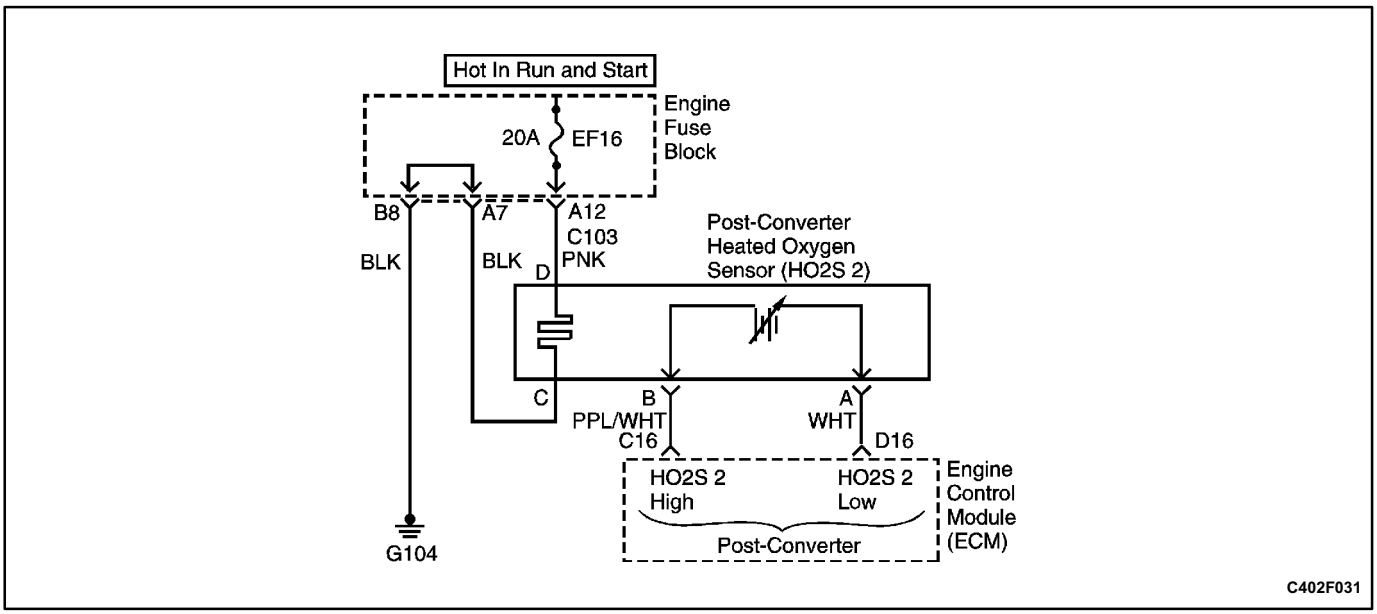

DIAGNOSTIC TROUBLE CODE (DTC) P0140
O2 BANK 1 SENSOR 2 NO ACTIVITY

Circuit Description

In order to control emissions, a catalytic converter is used to convert harmful emissions into harmless water vapor and carbon dioxide.

The engine control module (ECM) has the ability to monitor this process by using a Heated Oxygen Sensor (HO2S 2). The HO2S 2, located in the exhaust stream past the catalytic converter, produces an output signal which indicates the storage capacity of the catalyst. This in turn indicates the catalyst's ability to convert exhaust emissions effectively. If the catalyst is functioning properly, the HO2S 2 signal will be far less active than the signal produced by the Oxygen Sensor (O2S 1).

If the HO2S 2 pigtail wiring, connector, or terminal is damaged, the entire HO2S 2 assembly must be replaced. Do not attempt to repair the wiring, connector, or terminals. In order for the sensor to function properly, it must have a clean air reference provided to it. This clean air reference is obtained by way of the HO2S 2 wire(s). Any attempt to repair the wires, connector, or terminals could result in the obstruction of the air reference and degrade the HO2S 2 performance.

Conditions for Setting the DTC

- HO2S 2 voltage is between 0.422 and 0.478 volts.
- Engine run time is greater than 60 seconds.
- Oxygen sensor heated.
- Closed loop stoichiometry.
- No related malfunctions.

Action Taken When the DTC Sets

- The Malfunction Indicator Lamp (MIL) will illuminate.
- The ECM will record operating conditions at the time the diagnostic fails. This information will be stored in the Freeze Frame and Failure Records buffers.
- A history DTC is stored.
- The coolant fan turns on.

Conditions for Clearing the MIL/DTC

- The MIL will turn off after three consecutive ignition cycles in which the diagnostic runs without a fault.
- A history DTC will clear after 40 consecutive warmup cycles without a fault.
- The DTC(s) can be cleared by using the scan tool.

Diagnostic Aids

An intermittent may be caused by a rubbedthrough wire insulation or a wire contacting the exhaust.

Check for the following conditions:

- A poor connection or a damaged harness - Inspect the harness for a short to ground in the sensor signal circuit. Ensure that the HO2S 2 pigtail is not contacting the exhaust. Check for the following conditions:
  - Improper mating
  - Broken locks
  - Improperly formed
  - Damaged terminals
  - Poor terminal-to-wire connection
  - Damaged harness
- Intermittent test - Observe HO2S 2 on the scan tool while moving the related connections and the wiring harness with the ignition ON. If the failure is induced, the HO2S 2 display will change. This may help isolate the location of the malfunction.

Test Description

Number(s) below refer to the step number(s) on the Diagnostic Table.

1. The On-Board Diagnostic (OBD) System Check prompts the technician to complete some basic

checks and to store the freeze frame and failure records data on the scan tool if applicable. This creates an electronic copy of the data taken when the malfunction occurred. The information is then stored on the scan tool for later reference.

2. This step determines if DTC P0140 is the result of a hard failure or an intermittent condition.

4. Disconnecting the HO2S 2 and jumpering the sensor signal circuit and the sensor low circuit to ground will determine if the ECM or wiring or HO2S 2 is malfunctioning.

6. Determines which circuit the malfunction is in. If the sensor signal circuit and the sensor low circuit are OK, then the ECM connection or ECM is malfunctioning.

10. The replacement ECM must be reprogrammed. Refer to the latest Techline procedure for ECM reprogramming.

DTC P0140 O2 Bank 1 Sensor 2 No Activity

Step	Action	Value(s)	Yes	No
1	Perform an OnBoard Diagnostic (OBD) System Check. Is the system check complete?	-	Go to *Step 2*	Go to "OnBoard Diagnostic System Check"
2	1. Install a scan tool with the engine above normal specified operating temperature. 2. Run the engine above the specified rpm for two minutes. Does the scan tool display a heated oxygen sensor (HO2S 2) voltage between the specified value?	80°C (176°F) 1200 rpm 425 mV-460 mV (0.425 V-0.460 V)	Go to *Step 4*	Go to *Step 3*
3	1. Turn the ignition ON with the engine OFF. 2. Review the Freeze Frame data and note the parameters. 3. Operate the vehicle within the Freeze Frame conditions and Conditions For Setting The DTC as noted? Does the scan tool display the HO2S 2 voltage steady around the specified value?	425 mV-460 mV (0.425 V-0.460 V)	Go to *Step 4*	Go to *Step 11*
4	1. Turn the ignition on, with the engine OFF. 2. Disconnect the HO2S 2 electrical connector. 3. Jumper the HO2S 2 high and low circuits, terminals A and B to ground. Does the scan tool indicate the HO2S 2 voltage below the specified value?	100 mV (0.10 V)	Go to *Step 5*	Go to *Step 6*
5	1. Turn the ignition OFF. 2. Check for a malfunctioning connection at the HO2S 2 engine control module [ECM] side) and repair as necessary. Is a repair necessary?	-	Go to *Step 11*	Go to *Step 7*
6	1. Turn the ignition switch OFF. 2. Remove the jumpers and reconnect the HO2S 2 electrical connector. 3. Disconnect the ECM connector. 4. Probe the HO2S 2 low circuit, terminal D16 with a test light to B+. Does the test light illuminate?	-	Go to *Step 8*	Go to *Step 9*
7	Replace the HO2S 2 Sensor. Is the action complete?	-	Go to *Step 11*	-

DTC P0140 O2 Bank 1 Sensor 2 No Activity (Cont'd)

Step	Action	Value(s)	Yes	No
8	Check for an open in the HO2S 2 high circuit or poor connection and repair as necessary. is a repair necessary?	-	Go to *Step 11*	Go to *Step 10*
9	Repair the open in the HO2S 2 low circuit. Is the action complete?	-	Go to *Step 11*	-
10	Replace the ECM. Is the action complete?	-	Go to *Step 11*	-
11	1. Using the scan tool, clear the Diagnostic Trouble Codes (DTCs). 2. Start the engine and idle at normal operating temperature. 3. Operate the vehicle within the Conditions for setting this DTC as specified in the supporting text. Does the scan tool indicate that this diagnostic has run and passed?	-	Go to *Step 12*	Go to *Step 2*
12	Check if any additional DTCs are set. Are any DTCs displayed that have not been diagnosed?	-	Go to applicable DTC table	System OK

BLANK

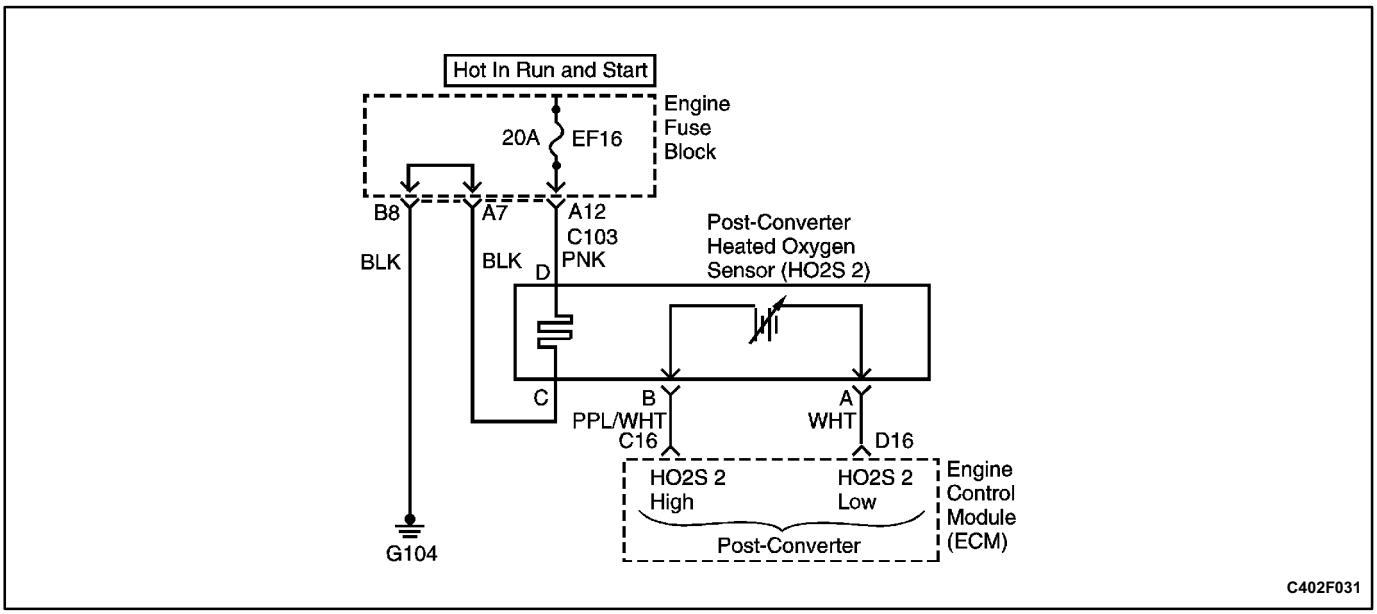

DIAGNOSTIC TROUBLE CODE (DTC) P0141
O2 BANK 1 SENSOR 2 HEATER

Circuit Description

In order to control emissions, a catalytic converter is used to convert harmful emissions into harmless water vapor and carbon dioxide.

The engine control module (ECM) has the ability to monitor this process by using a Heated Oxygen Sensor (HO2S 2). The HO2S 2, located in the exhaust stream past the catalytic converter, produces an output signal which indicates the storage capacity of the catalyst; this in turn indicates the catalyst's ability to convert exhaust emissions effectively. If the catalyst is functioning properly, the HO2S 2 signal will be far less active than the signal produced by the Oxygen Sensor (O2S 1).

If the HO2S 2 pigtail wiring, connector, or terminal is damaged, the entire HO2S 2 assembly must be replaced. Do not attempt to repair the wiring, connector, or terminals. In order for the sensor to function properly, it must have a clean air reference provided to it. This clean air reference is obtained by way of the HO2S 2 wire(s). Any attempt to repair the wires, connector, or terminals could result in the obstruction of the air reference and degrade the HO2S 2 performance.

Conditions for Setting the DTC

- Engine coolant temperature (CTS) is less than 40°C (40°F).
- Intake Air Temperature (MAT) less than 40°C (40°F).
- Ignition voltage is between 11 and 16 volts.
- Average airflow is less than 16 g/sec.
- Test between 400 mv and 500 mv.
- Throttle Position Sensor (TPS) is greater than 40% with a 0.4 second delay.

Action Taken When the DTC Sets

- The Malfunction Indicator Lamp (MIL) will illuminate.
- The ECM will record operating conditions at the time the diagnostic fails. This information will be stored in the Freeze Frame and Failure Records buffers.
- A history DTC is stored.
- The coolant fan turns on.

Conditions for Clearing the MIL/DTC

- The MIL will turn off after three consecutive ignition cycles in which the diagnostic runs without a fault.
- A history DTC will clear after 40 consecutive warmup cycles without a fault.
- The DTC(s) can be cleared by using the scan tool.

Diagnostic Aids

An intermittent may be caused by a rubbedthrough wire insulation or a wire contacting the exhaust.

Check for a poor connection or a damaged harness - inspect the harness connectors for the following conditions:

- Improper mating
- Broken locks
- Improperly formed
- Damaged terminals
- Poor terminaltowire connection
- Damaged harness

Test Description

Number(s) below refer to the step number(s) on the Diagnostic Table.

1. The On-Board Diagnostic (OBD) System Check prompts the technician to complete some basic checks and to store the freeze frame and failure records data on the scan tool if applicable. This creates an electronic copy of the data taken when the

malfunction occurred. The information is then stored on the scan tool for later reference.

2. This step determines if DTC P0141 is the result of a hard failure or an intermittent condition. With the ignition ON, engine OFF, the HO2S 2 voltage displayed on the scan tool should change within several minutes towards 0 or 1 volt, indicating that the heater is working properly.
3. Probing terminal D of the HO2S 2 connector verifies if voltage is available to the HO2S 2 heater.
4. If voltage is available at the connector, it becomes a good voltage source to check for a ground at terminal C.
5. Determines if voltage is not available at the HO2S 2 due to an open O2 fuse or open ignition feed circuit. If the fuse is open, determine if it was due to a short in the ignition feed circuit before replacing the fuse.

DTC P0141 O2 Bank 1 Sensor 2 Heater

Step	Action	Value(s)	Yes	No
1	Perform an OnBoard Diagnostic (OBD) System Check. Is the system check complete?	-	Go to *Step 2*	Go to "OnBoard Diagnostic System Check"
2	**Notice:** If the engine has just been operating, allow the engine to cool for about one half hour before proceeding. 1. Turn the ignition switch ON with the engine OFF. 2. Install a scan tool. Does the Heated Oxygen Sensor (HO2S 2) voltage gradually change towards the specified voltage?	0 V or 1 V	Go to *Step 13*	Go to *Step 3*
3	1. Disconnect the HO2S 2 electrical connector. 2. With a test light connected to ground, probe the ignition feed circuit, terminal D of the connector. Does the test light illuminate?	-	Go to *Step 4*	Go to *Step 5*
4	Connect a test light between the ignition feed and ground circuits, terminals D and C of the connector. Does the test light illuminate?	-	Go to *Step 6*	Go to *Step 6*
5	Inspect the fuse in the Instrument Panel (I/P) fuse block. Is the fuse open?	-	Go to *Step 8*	Go to *Step 9*
6	Check the connections at the HO2S 2 connector and repair as necessary. Is a repair necessary?	-	Go to *Step 13*	Go to *Step 10*
7	Check the connections at the HO2S 2 connector and repair as necessary. Is a repair necessary?	-	Go to *Step 13*	Go to *Step 11*
8	1. Check for a short to ground in the HO2S 2 ignition feed circuit and repair as necessary? 2. Replace open fuse. Is the action complete?	-	Go to *Step 13*	-
9	Check the connections at the HO2S 2 connector and repair as necessary. Is a repair necessary?	-	Go to *Step 13*	Go to *Step 12*
10	Replace the HO2S 2 sensor. Is the action complete?	-	Go to *Step 13*	-
11	Repair the open in the ground circuit. Is the action complete?	-	Go to *Step 13*	-

DTC P0141 O2 Bank 1 Sensor 2 Heater (Cont'd)

Step	Action	Value(s)	Yes	No
12	Repair the open in the ignition feed circuit. Is the action complete?	-	Go to *Step 13*	-
13	1. Using the scan tool, clear the Diagnostic Trouble Codes (DTCs). 2. Start the engine and idle at normal operating temperature. 3. Operate the vehicle within the conditions for setting this DTC as specified in the supporting text. Does the scan tool indicate that this diagnostic has run and passed?	-	Go to *Step 14*	Go to *Step 2*
14	Check if any additional DTCs are set. Are any DTCs displayed that have not been diagnosed?	-	Go to applicable DTC table	System OK

BLANK

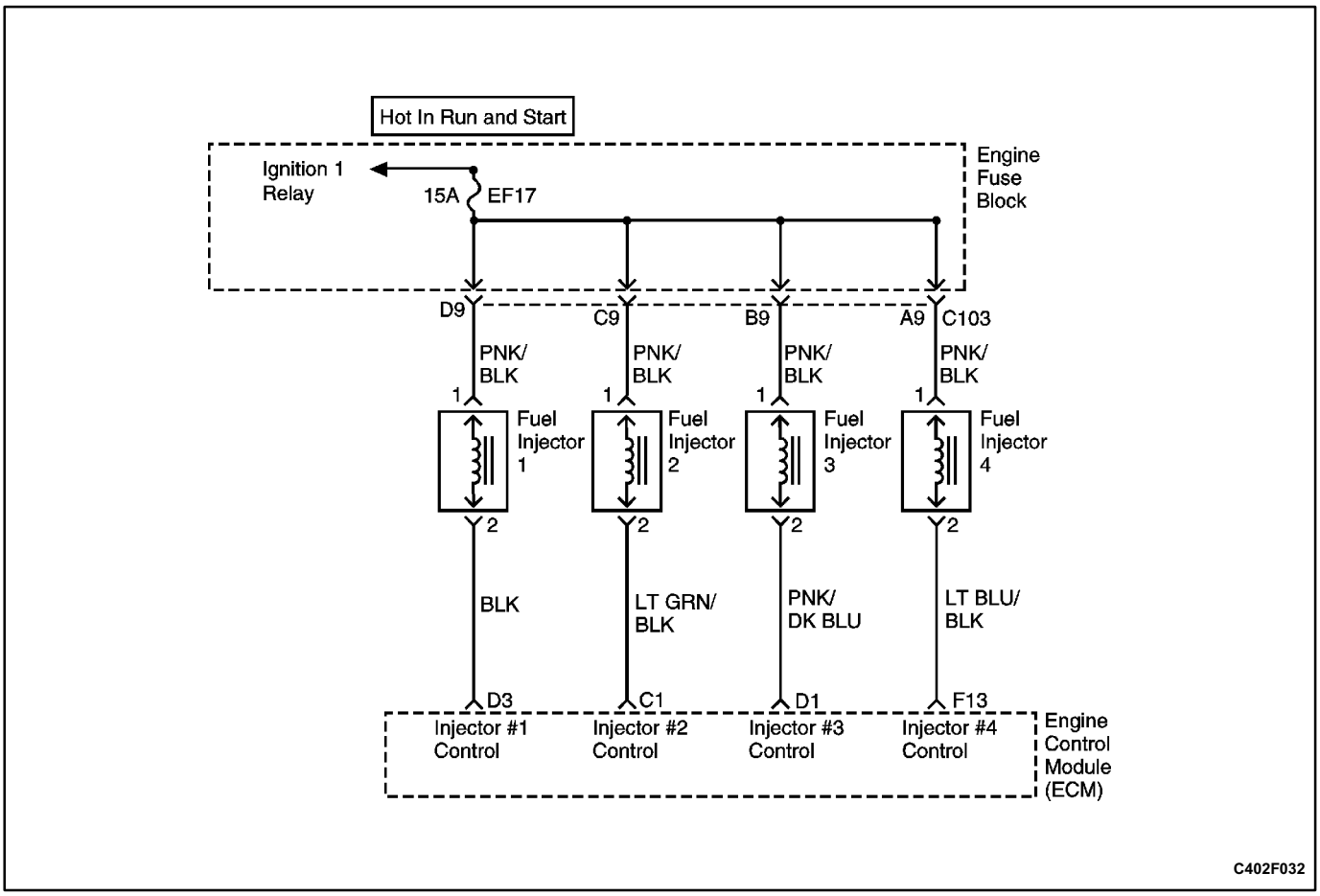

DIAGNOSTIC TROUBLE CODE (DTC) P0201
INJECTOR 1 CIRCUIT FAULT

Circuit Description

The engine control module (ECM) has four individual injector driver circuits, each of which controls an injector. When a driver circuit is grounded by the ECM, the injector is activated. The ECM monitors the current in each driver circuit. The ECM measures a voltage drop through a fixed resistor and controls it. The voltage on each driver is monitored to detect a fault. If the voltage is not what the ECM expects to monitor on the circuit, a Diagnostic Trouble Code (DTC) is set. This DTC detects a short to ground and/or an open circuit and short to battery conditions for lowside drive injector outputs.

Conditions for Setting the DTC

- Engine is in run mode.
- Battery voltage is more than 9 volts.
- Above conditions are met for 5 seconds.

Action Taken When the DTC Sets

- The ECM will illuminate the Malfunction Indicator Lamp (MIL) the first time the fault is Detected.
- The ECM will store conditions which were present when the DTC was set as Freeze Frame and in the Failure Records data.

Conditions for Clearing the MIL/DTC

- The ECM will turn off the MIL on the third consecutive trip cycle in which the diagnostic has been run and the fault is no longer present.
- A history DTC P0201 will clear after 40 consecutive warmup cycles without a fault.
- DTC P0201 can be cleared by using the scan tool Clear Info function or by disconnecting the ECM battery feed.

Diagnostic Aids

An injector driver circuit that is open or shorted to voltage will cause a DTC P0201 to set. It will also cause a misfire due to an inoperative injector. A misfire DTC should also be set indicating which injector is inoperative.

Longterm and shortterm fuel trims that are excessively high or low are a good indication that an injector is malfunctioning. Refer to Fuel Injector Balance Test" in this section to check for malfunctioning injectors.

The injector resistance tested at the ECM connection is slightly more than if tested directly at the injector

because it includes resistance of the harness wires. The normal value is about 13.5 Ω.

Test Description

Number(s) below refer to the step number(s) on the Diagnostic Table.

1. The OnBoard Diagnostic (OBD) System Check prompts the technician to complete some basic checks and store the freeze frame and failure records data on the scan tool if applicable. This creates an electronic copy of the data taken when the malfunction occurred. The information is then stored on the scan tool for later reference.
3. This step determines if DTC P0201 is the result of a hard failure or an intermittent condition.
5. This step tests the wiring harness and the ECM control of the injectors using a test light.
7. This step determines if the circuitry is shorted to voltage or if the ECM is faulty.
9. The replacement ECM must be reprogrammed. Refer to the latest Techline procedure for ECM reprogramming.

DTC P0201 Injector 1 Circuit Fault

Step	Action	Value(s)	Yes	No
1	Perform an On-Board Diagnostic (OBD) System Check. Is the system check complete?	-	Go to *Step 2*	Go to "On-Board Diagnostic System Check"
2	Will the engine start?	-	Go to *Step 3*	Go to "Engine Cranks But Will Not Run"
3	1. Install a scan tool and clear the Diagnostic Trouble Codes (DTCs). 2. Idle the engine for one minute. Does DTC P0201 reset?	-	Go to *Step 5*	Go to *Step 4*
4	1. Review the Freeze Frame data with the ignition ON and the engine OFF and note the parameters. 2. Operate the vehicle within the Freeze Frame conditions as noted. Does DTC P0201 reset?	-	Go to *Step 5*	Go to "Diagnostic Aids"
5	1. Disconnect the engine control module (ECM) connector for injector 1. 2. With a test light connected to ground, probe the driver circuit, terminal D3. Does the test light illuminate?	-	Go to *Step 7*	Go to *Step 6*
6	Repair the short to ground or open in the injector driver circuit. Is the action complete?	-	Go to *Step 10*	-
7	1. Disconnect the injector 1 wiring connection. 2. With a test light connected to ground, probe the driver circuit, terminal 2. Does the test light illuminate?	-	Go to *Step 8*	Go to *Step 9*
8	Repair the short to voltage in the injector driver circuit. Is the repair complete?	-	Go to *Step 10*	-
9	Replace the ECM. Is the action complete?	-	Go to *Step 10*	-
10	1. Using the scan tool, clear the DTCs. 2. Start the engine and idle at normal operating temperature. 3. Operate the vehicle within the conditions for setting this DTC as specified in the supporting text. Does the scan tool indicate that this diagnostic ran and passed?	-	Go to *Step 11*	Go to *Step 3*
11	Check if any additional DTCs are set. Are any DTCs displayed that have not been diagnosed?	-	Go to applicable DTC table	System OK

BLANK

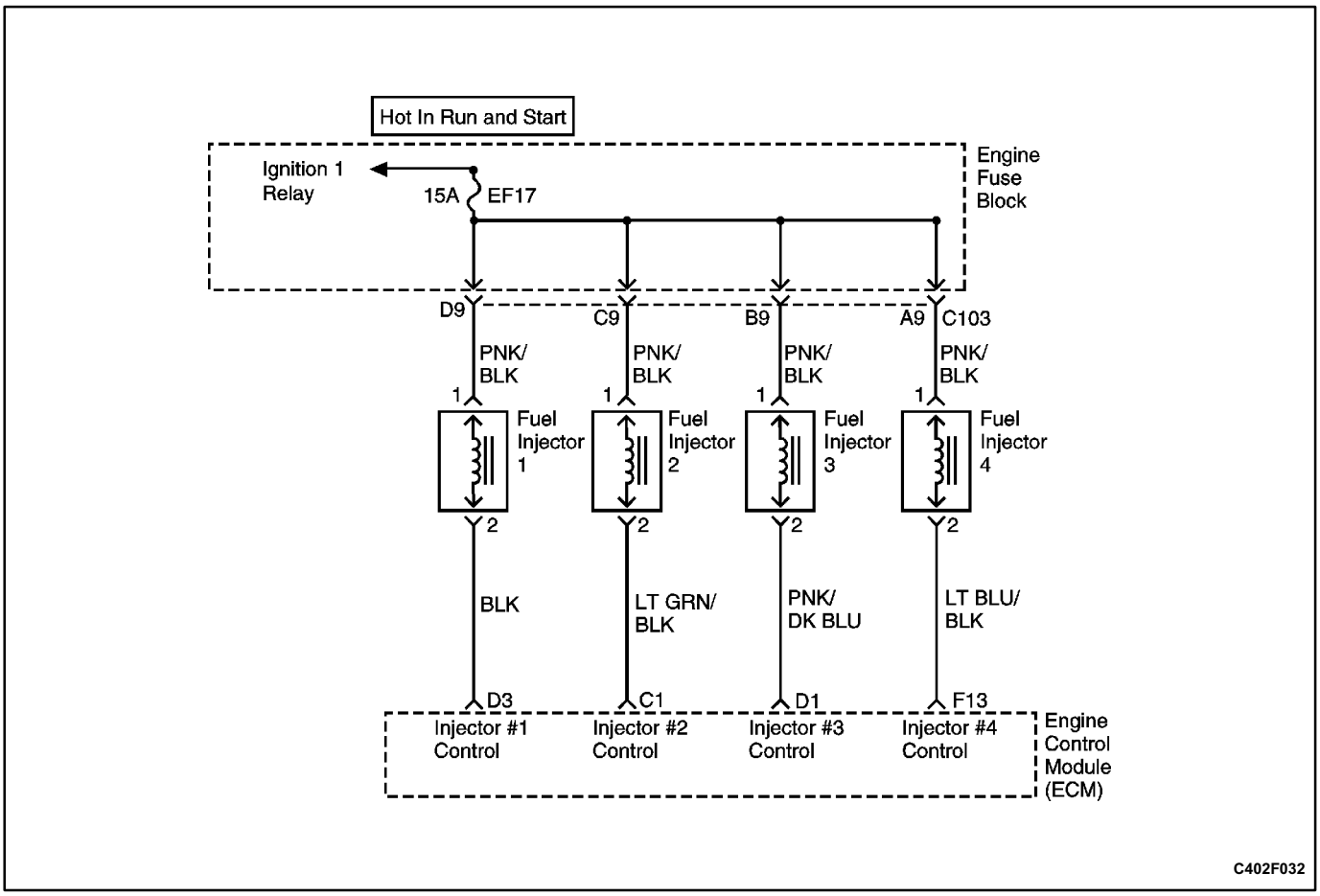

DIAGNOSTIC TROUBLE CODE (DTC) P0202
INJECTOR 2 CIRCUIT FAULT

Circuit Description

The engine control module (ECM) has four individual injector driver circuits, each of which controls an injector. When a driver circuit is grounded by the ECM, the injector is activated. The ECM monitors the current in each driver circuit. The ECM measures a voltage drop through a fixed resistor and controls it. The voltage on each driver is monitored to detect a fault. If the voltage is not what the ECM expects to monitor on the circuit, a Diagnostic Trouble Code (DTC) is set. This DTC detects a short to ground and/or an open circuit and a short to battery conditions for low-side drive injector outputs.

Conditions for Setting the DTC

- Engine is in run mode.
- Battery voltage is more than 9 volts.
- Above conditions are met for 5 seconds.

Action Taken When the DTC Sets

- The ECM will illuminate the Malfunction Indicator Lamp (MIL) the first time the fault is detected.
- The ECM will store conditions which were present when the DTC was set as Freeze Frame and in the Failure Records data.

Conditions for Clearing the MIL/DTC

- The ECM will turn off the MIL on the third consecutive trip cycle in which the diagnostic has been run and the fault is no longer present.
- A history DTC P0202 will clear after 40 consecutive warmup cycles without a fault.
- DTC P0202 can be cleared by using the scan tool Clear Info function or by disconnecting the ECM battery feed.

Diagnostic Aids

An injector driver circuit that is open or shorted to voltage will cause a DTC P0202 to set. It will also cause a misfire due to an inoperative injector. A misfire DTC should also be set indicating which injector is inoperative.

Long-term and short-term fuel trims that are excessively high or low are a good indication that an injector is malfunctioning. Use Fuel Injector Balance Test to check for malfunctioning injectors.

Injector resistance tested at the ECM connection is slightly more than if tested directly at the injector

because it includes resistance of the harness wires. The normal value is about 13.5 Ω.

Test Description

Number(s) below refer to the step number(s) on the Diagnostic Table.

1. The OnBoard Diagnostic (OBD) System Check prompts the technician to complete some basic checks and store the freeze frame and failure records data on the scan tool if applicable. This creates an electronic copy of the data taken when the malfunction occurred. The information is then stored on the scan tool for later reference.
3. This step determines if DTC P0202 is the result of a hard failure or an intermittent condition.
5. This step tests the wiring harness and the ECM control of the injectors using a test light.
7. This step determines if the circuitry is shorted to voltage or if the ECM is faulty.
9. The replacement ECM must be reprogrammed. Refer to the latest Techline procedure for ECM reprogramming.

DTC P0202 Injector 2 Circuit Fault

Step	Action	Value(s)	Yes	No
1	Perform an On-Board Diagnostic (OBD) System Check. Is the system check complete?	-	Go to *Step 2*	Go to "On-Board Diagnostic System Check"
2	Will engine start?	-	Go to *Step 3*	Go to "Engine Cranks But Will Not Run"
3	1. Install a scan tool and clear the Diagnostic Trouble Codes (DTC). 2. Idle the engine for one minute. Does DTC P0202 reset?	-	Go to *Step 5*	Go to *Step 4*
4	1. Review the Freeze Frame data with the ignition ON and the engine OFF and note the parameters. 2. Operate the vehicle within the Freeze Frame conditions as noted. Does DTC P0202 reset?	-	Go to *Step 5*	Go to "Diagnostic Aids"
5	1. Disconnect the engine control module (ECM) connector for injector 2. 2. With a test light connected to ground, probe the driver circuit, terminal C1. Does the test light illuminate?	-	Go to *Step 7*	Go to *Step 6*
6	Repair the short to ground or open in the injector driver circuit. Is the action complete?	-	Go to *Step 10*	-
7	1. Disconnect the injector 2 wiring connection. 2. With a test light connected to ground, probe the driver circuit, terminal 2. Does the test light illuminate?	-	Go to *Step 8*	Go to *Step 9*
8	Repair the short to voltage in the injector driver circuit. Is the repair complete?	-	Go to *Step 10*	-
9	Replace the ECM. Is the action complete?	-	Go to *Step 10*	-
10	1. Using the scan tool, clear the DTCs. 2. Start the engine and idle at normal operating temperature. 3. Operate the vehicle within the conditions for setting this DTC as specified in the supporting text. Does the scan tool indicate that this diagnostic ran and passed?	-	Go to *Step 11*	Go to *Step 3*
11	Check if any additional DTCs are set. Are any DTCs displayed that have not been diagnosed?	-	Go to applicable DTC table	System OK

BLANK

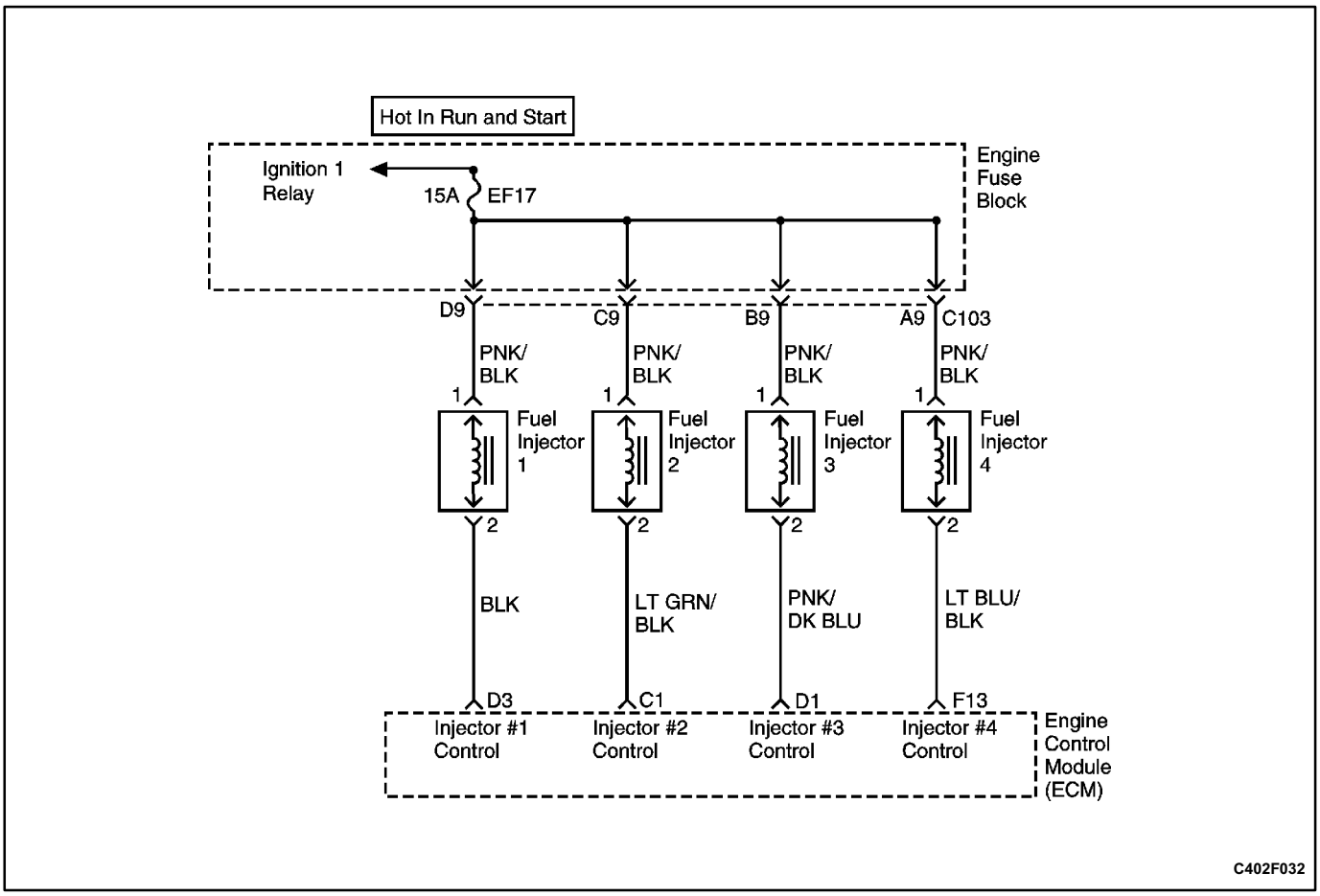

DIAGNOSTIC TROUBLE CODE (DTC) P0203
INJECTOR 3 CIRCUIT FAULT

Circuit Description

The engine control module (ECM) has four individual injector driver circuits, each of which controls an injector. When a driver circuit is grounded by the ECM, the injector is activated. The ECM monitors the current in each driver circuit. The ECM measures a voltage drop through a fixed resistor and controls it. The voltage on each driver is monitored to detect a fault. If the voltage is not what the ECM expects to monitor on the circuit, a Diagnostic Trouble Code (DTC) is set. This DTC detects a short to ground and/or an open circuit and a short to battery conditions for low-side drive injector outputs.

Conditions for Setting the DTC

- Engine is in run mode.
- Battery voltage is more than 9 volts.
- Above conditions are met for 5 seconds.

Action Taken When the DTC Sets

- The ECM will illuminate the Malfunction Indicator Lamp (MIL) the first time the fault is Detected.
- The ECM will store conditions which were present when the DTC was set as Freeze Frame and in the Failure Records data.

Conditions for Clearing the MIL/DTC

- The ECM will turn OFF the MIL on the third consecutive trip cycle in which the diagnostic has been run and the fault is no longer present.
- A history DTC P0203 will clear after 40 consecutive warm-up cycles without a fault.
- DTC P0203 can be cleared by using the scan tool Clear Info function or by disconnecting the ECM battery feed.

Diagnostic Aids

An injector driver circuit that is open or shorted to voltage will cause a DTC P0203 to set. It will also cause a misfire due to an inoperative injector. A misfire DTC should also be set indicating which injector is inoperative.

Longterm and shortterm fuel trims that are excessively high or low are a good indication that an injector is malfunctioning. Refer to Fuel Injector Balance Test" in this section to check for malfunctioning injectors.

Injector resistance tested at the ECM connection is slightly more than if tested directly at the injector

because it includes resistance of the harness wires. The normal value is about 13.5 Ω.

Test Description

Number(s) below refer to the step number(s) on the Diagnostic Table.

1. The OnBoard Diagnostic (OBD) System Check prompts the technician to complete some basic checks and to store the freeze frame and failure records data on the scan tool if applicable. This creates an electronic copy of the data taken when the malfunction occurred. The information is then stored on the scan tool for later reference.
3. This step determines if DTC P0203 is the result of a hard failure or an intermittent condition.
5. This step tests the wiring harness and the ECM control of the injectors using a test light.
7. This step determines if the circuitry is shorted to voltage or if the ECM is faulty.
9. The replacement ECM must be reprogrammed. Refer to the latest Techline procedure for ECM reprogramming.

DTC P0203 Injector 3 Circuit Fault

Step	Action	Value(s)	Yes	No
1	Perform an On-Board Diagnostic (OBD) System Check. Is the system check complete?	-	Go to *Step 2*	Go to "On-Board Diagnostic System Check"
2	Will engine start?	-	Go to *Step 3*	Go to "Engine Cranks But Will Not Run"
3	1. Install a scan tool and clear the Diagnostic Trouble Codes (DTCs). 2. Idle the engine for one minute. Does DTC P0203 reset?	-	Go to *Step 5*	Go to *Step 4*
4	1. Review the Freeze Frame data with the ignition ON and the engine OFF and note the parameters. 2. Operate the vehicle within the Freeze Frame conditions as noted. Does DTC P0203 reset?	-	Go to *Step 5*	Go to "Diagnostic Aids"
5	1. Disconnect the engine control module (ECM) connector for injector 3. 2. With a test light connected to ground, probe the driver circuit, terminal D1. Does the test light illuminate?	-	Go to *Step 7*	Go to *Step 6*
6	Repair the short to ground or open in the injector driver circuit. Is the action complete?	-	Go to *Step 10*	-
7	1. Disconnect the injector 3 wiring connection. 2. With a test light connected to ground, probe the driver circuit, terminal 2. Does the test light illuminate?	-	Go to *Step 8*	Go to *Step 9*
8	Repair the short to voltage in the injector driver circuit. Is the repair complete?	-	Go to *Step 10*	-
9	Replace the ECM. Is the action complete?	-	Go to *Step 10*	-
10	1. Using the scan tool, clear the DTCs. 2. Start the engine and idle at normal operating temperature. 3. Operate the vehicle within the conditions for setting this DTC as specified in the supporting text. Does the scan tool indicate that this diagnostic ran and passed?	-	Go to *Step 11*	Go to *Step 3*
11	Check if any additional DTCs are set. Are any DTCs displayed that have not been diagnosed?	-	Go to applicable DTC table	System OK

BLANK

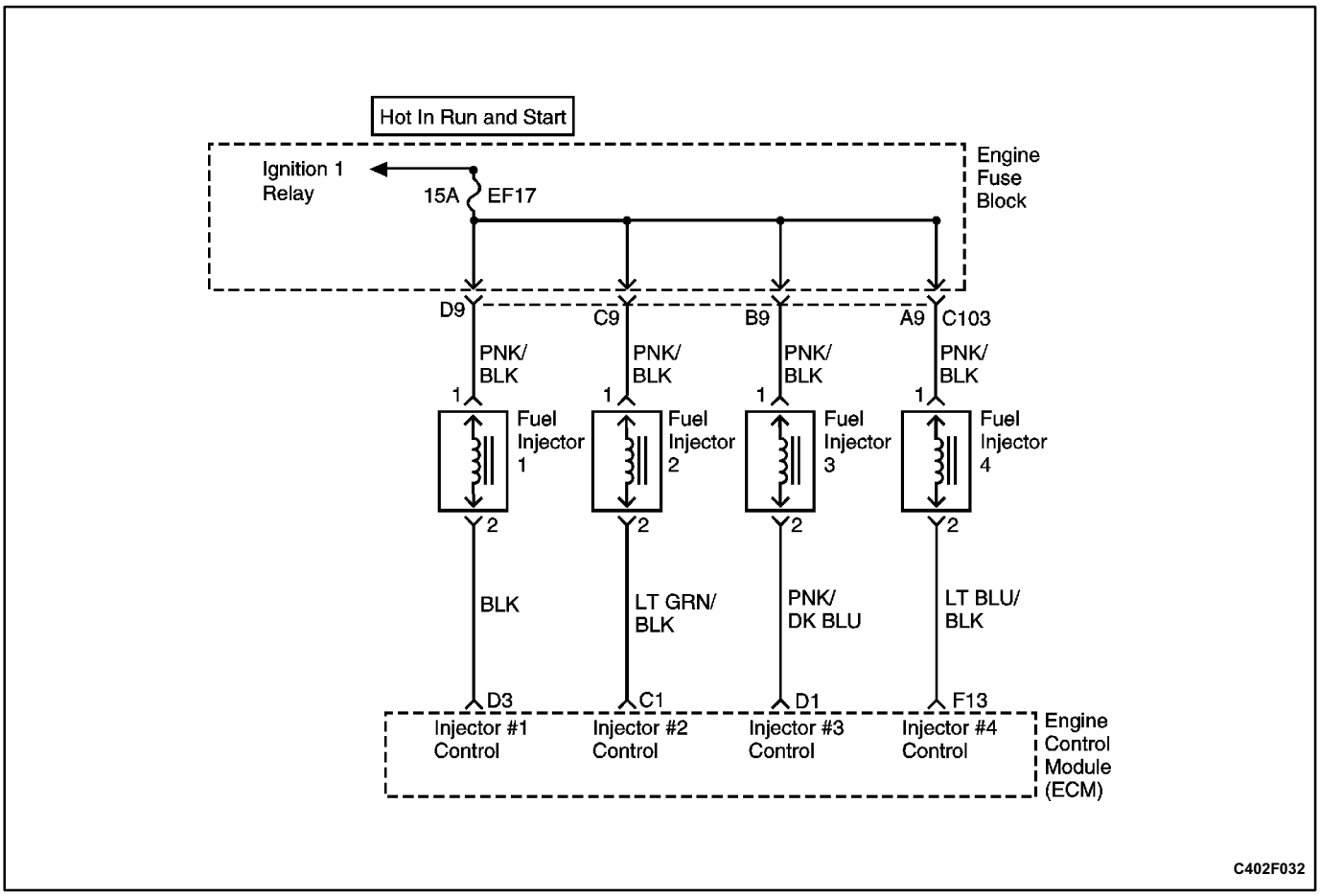

DIAGNOSTIC TROUBLE CODE (DTC) P0204
INJECTOR 4 CIRCUIT FAULT

Circuit Description

The engine control module (ECM) has four individual injector driver circuits, each of which controls an injector. When a driver circuit is grounded by the ECM, the injector is activated. The ECM monitors the current in each driver circuit. The ECM measures a voltage drop through a fixed resistor and controls it. The voltage on each driver is monitored to detect a fault. If the voltage is not what the ECM expects to monitor on the circuit, a Diagnostic Trouble Code (DTC) is set. This DTC detects a short to ground and/or an open circuit and a short to battery conditions for low-side drive injector outputs.

Conditions for Setting the DTC

- Engine is in run mode.
- Battery voltage is more than 9 volts.
- Above conditions are met for 5 seconds.

Action Taken When the DTC Sets

- The ECM will illuminate the Malfunction Indicator Lamp (MIL) the first time the fault is Detected.
- The ECM will store conditions which were present when the DTC was set as Freeze Frame and in the Failure Records data.

Conditions for Clearing the MIL/DTC

- The ECM will turn OFF the MIL on the third consecutive trip cycle in which the diagnostic has been run and the fault is no longer present.
- A history DTC P0204 will clear after 40 consecutive warmup cycles without a fault.
- DTC P0204 can be cleared by using the scan tool Clear Info function or by disconnecting the ECM battery feed.

Diagnostic Aids

An injector driver circuit that is open or shorted to voltage will cause a DTC P0204 to set. It will also cause a misfire due to an inoperative injector. A misfire DTC should also be set indicating which injector is inoperative.

Longterm and shortterm fuel trims that are excessively high or low are a good indication that an injector is malfunctioning. Refer to Fuel Injector Balance Test" in this section to check for malfunctioning injectors.

Injector resistance tested at the ECM connection is slightly more than if tested directly at the injector

because it includes resistance of the harness wires. The normal value is about 13.5 Ω.

Test Description

Number(s) below refer to the step number(s) on the Diagnostic Table.

1. The On-Board Diagnostic (OBD) System Check prompts the technician to complete some basic checks and store the freeze frame and failure records data on the scan tool if applicable. This creates an electronic copy of the data taken when the malfunction occurred. The information is then stored on the scan tool for later reference.

. This step determines if DTC P0204 is the result of a hard failure or an intermittent condition.

5. This step tests the wiring harness and ECM control of the injectors using a test light.

7. This step determines if the circuitry is shorted to voltage or if the ECM is faulty.

. The replacement ECM must be reprogrammed. Refer to the latest Techline procedure for ECM reprogramming.

DTC P0204 Injector 4 Circuit Fault

Step	Action	Value(s)	Yes	No
1	Perform an On-Board Diagnostic (OBD) System Check. Is the system check complete?	-	Go to *Step 2*	Go to "On-Board Diagnostic System Check"
2	Will engine start?	-	Go to *Step 3*	Go to "Engine Cranks But Will Not Run"
3	1. Install a scan tool and clear the Diagnostic Trouble Codes (DTC). 2. Idle the engine for one minute. Does DTC P0204 reset?	-	Go to *Step 5*	Go to *Step 4*
4	1. Review the Freeze Frame data with the ignition ON and the engine OFF and note the parameters. 2. Operate the vehicle within the Freeze Frame conditions as noted. Does DTC P0204 reset?	-	Go to *Step 5*	Go to "Diagnostic Aids"
5	1. Disconnect the engine control module (ECM) connector for injector 4. 2. With a test light connected to ground, probe the driver circuit, terminal F13. Does the test light illuminate?	-	Go to *Step 7*	Go to *Step 6*
6	Repair the short to ground or open in the injector driver circuit. Is the action complete?	-	Go to *Step 10*	-
7	1. Disconnect the injector 4 wiring connection. 2. With a test light connected to ground, probe the driver circuit, terminal 2. Does the test light illuminate?	-	Go to *Step 8*	Go to *Step 9*
8	Repair the short to voltage in the injector driver circuit. Is the repair complete?	-	Go to *Step 10*	-
9	Replace the ECM. Is the action complete?	-	Go to *Step 10*	-
10	1. Using the scan tool, clear the DTCs. 2. Start the engine and idle at normal operating temperature. 3. Operate the vehicle within the conditions for setting this DTC as specified in the supporting text. Does the scan tool indicate that this diagnostic ran and passed?	-	Go to *Step 11*	Go to *Step 3*
11	Check if any additional DTCs are set. Are any DTCs displayed that have not been diagnosed?	-	Go to applicable DTC table	System OK

BLANK

DIAGNOSTIC TROUBLE CODE (DTC) P0325

KNOCK SENSOR SNEF INTERNAL MALFUNCTION

System Description

The knock sensor (KS) system is used to detect engine detonation, allowing the engine control module (ECM) to retard the ignition control spark timing based on the KS signal being received. The KS produces an AC signal so that under a nonknock condition the signal on the KS circuit measures about 0.007 volts AC. The KS signal's amplitude and frequency depend upon the amount of knock being experienced. The ECM contains a nonreplaceable knock filter module called a signaltonoise enhancement filter (SNEF) module. This filter module in the ECM determines whether or not knock is occurring by comparing the signal level on the KS circuit with the voltage level on the noise channel. The noise channel allows the ECM to reject any false knock signal by knowing the amount of normal engine mechanical noise present. Normal engine noise varies depending on engine speed and load. When the ECM determines that an abnormally low noise channel voltage level is being experienced, Diagnostic Trouble Code (DTC) P0325 will set.

Conditions for Setting the DTC

- Vacuum is less than 10 to 50 kPa, based on rpm.
- The rpm is greater than 2500.
- SNEF A/D reading is greater than 150 for any of the 4 cylinders.
- Maximum minus the minimum A/D reading is less than 1 for one complete engine cycle.

Action Taken When the DTC Sets

- The Malfunction Indicator Lamp (MIL) will illuminate.
- The ECM will record operating conditions at the time the diagnostic fails. This information will be stored in the Freeze Frame and Failure Records buffers.
- A history DTC is stored.
- The ECM will default to 6 degrees timing.

Conditions for Clearing the MIL/DTC

- The MIL will turn off after three consecutive ignition cycles in which the diagnostic runs without a fault within the freeze frame conditions that the DTC failed.
- A history DTC will clear after 40 consecutive warm-up cycles without a fault.
- DTC(s) can be cleared by using the scan tool.

Diagnostic Aids

Check and correct any abnormal engine noise before using the diagnostic table.

Any circuitry, that is suspected as causing the complaint, should be thoroughly checked for the following conditions:

- Backedout terminals
- Improper mating
- Broken locks
- Improperly formed
- Damaged terminals
- Poor terminaltowire connection
- Physical damage to the wiring harness

Test Description

Number(s) below refer to the step number(s) on the Diagnostic Table.

1. The On-Board Diagnostic (OBD) System Check prompts the technician to complete some basic checks and store the freeze frame and failure records data on the scan tool if applicable. This creates an electronic copy of the data taken when the malfunction occurred. The information is then stored on the scan tool for later reference.
2. If the conditions for the test as described above are met, a DTC P0325 will set and the MIL will illuminate.
4. If the engine has an internal knock or audible noise that causes a knocking type noise on the engine block, the knock sensor may be responding to the noise.
6. The replacement ECM must be reprogrammed. Refer to the latest Techline procedure for ECM reprogramming.

DTC P0325 Knock Sensor SNEF Internal Malfunction

Step	Action	Value(s)	Yes	No
1	Perform an On-Board Diagnostic (OBD) System Check. Is the system check complete?	-	Go to *Step 2*	Go to "On-Board Diagnostic System Check"
2	1. Start the engine. 2. Install a scan tool. 3. Clear the Diagnostic Trouble Codes (DTCs). 4. Operate the vehicle within the Freeze Frame conditions and Conditions for Setting The DTC as noted. Does the Malfunction Indicator Lamp (MIL) illuminate?	120 seconds	Go to *Step 4*	Go to *Step 3*
3	1. Turn the ignition switch ON with the engine OFF. 2. Review the Freeze Frame data and note the parameters. 3. Operate the vehicle within the Freeze Frame conditions and Conditions for Setting The DTC as noted. Does the Malfunction Indicator Lamp (MIL) illuminate?	-	Go to *Step 4*	Go to *Step 7*
4	Listen to the engine while raising and lowering the engine speed. Is a knock or audible noise present?	-	Go to *Step 5*	Go to *Step 6*
5	Repair the mechanical engine problem or a loose bracket or component. Is the action complete?	-	Go to *Step 7*	-
6	Replace the engine control module (ECM). Is the action complete?	-	Go to *Step 7*	-
7	1. Using the scan tool, clear the DTCs. 2. Start the engine and idle at normal operating temperature. 3. Operate the vehicle within the conditions for setting this DTC as specified in the supporting text. Does the scan tool indicate that this diagnostic has run and passed?	-	Go to *Step 8*	Go to *Step 2*
8	Check if any additional DTCs are set. Are any DTCs displayed that have not been diagnosed?	-	Go to applicable DTC table	System OK

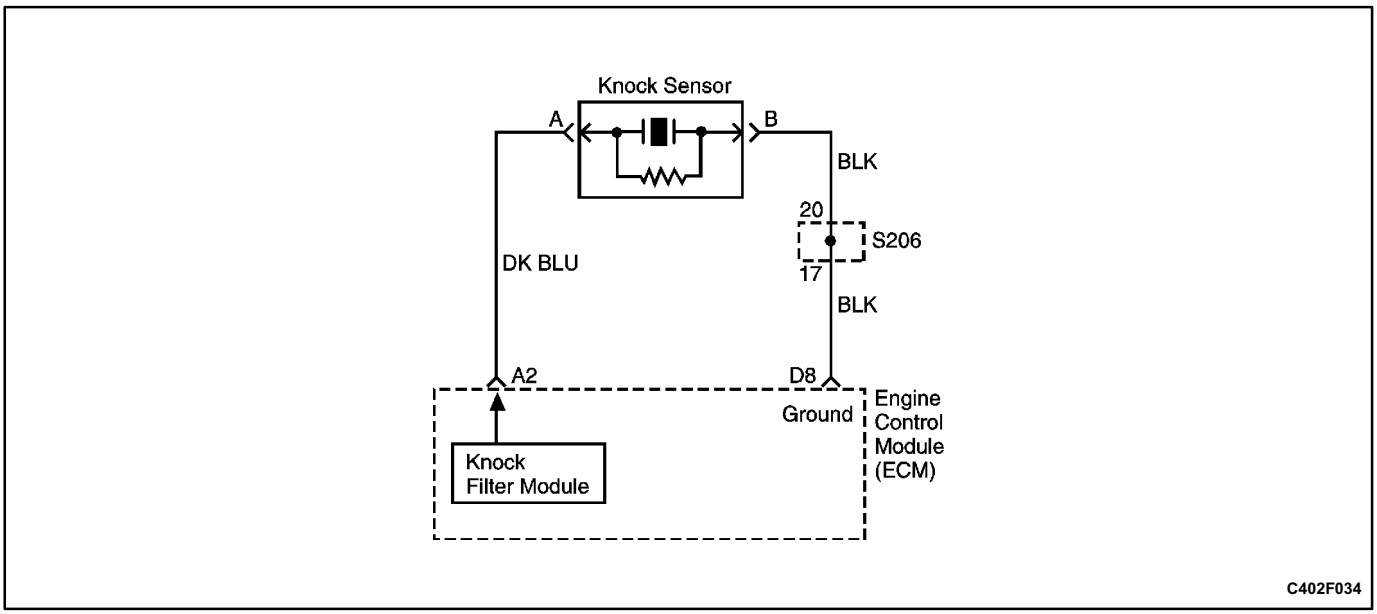

DIAGNOSTIC TROUBLE CODE (DTC) P0327
KNOCK SENSOR CIRCUIT FAULT

System Description

The knock sensor (KS) system is used to detect engine detonation, allowing the engine control module (ECM) to retard the ignition control spark timing based on the KS signal being received. The KS produces an AC signal so that under a no-knock condition the signal on the KS circuit measures about 0.007 volts AC. The KS signal's amplitude and frequency depend upon the amount of knock being experienced. The ECM monitors the KS signal and can diagnose the KS sensor and circuitry.

Conditions for Setting the DTC

- Knock voltage on all cylinder is less than 195 volts.
- All cylinder gain is greater than 191, and the rpm is greater than 6375.
- KS voltage on all cylinders is less than 0.88 volts and all cylinder gain is greater than 191.
- Vacuum is less than 10 to 50 kPa based on rpm.
- The rpm is greater than 2000.

Action Taken When the DTC Sets

- The Malfunction Indicator Lamp (MIL) will illuminate.
- The ECM will record operating conditions at the time the diagnostic fails. This information will be stored in the Freeze Frame and Failure Records buffers.
- A history Diagnostic Trouble Code (DTC) is stored.
- The ECM will use a calculated spark retard value to minimize knock during conditions when knock is likely to occur. The calculated value will vary based on engine speed and load.

Conditions for Clearing the MIL/DTC

- The MIL will turn off after three consecutive ignition cycles in which the diagnostic runs without a fault within the freeze frame conditions that the DTC failed.
- A history DTC will clear after 40 consecutive warmup cycles without a fault.
- DTC(s) can be cleared by using the scan tool.

Diagnostic Aids

Check and correct any abnormal engine noise before using the diagnostic table.

Any circuitry that is suspected as causing the complaint should be thoroughly checked for the following conditions:

- Backed-out terminals
- Improper mating
- Broken locks
- Improperly formed
- Damaged terminals
- Poor terminal-to-wire connection
- Physical damage to the wiring harness

Test Description

Number(s) below refer to the step number(s) on the Diagnostic Table.

1. The OnBoard Diagnostic (OBD) System Check prompts the technician to complete some basic checks and store the freeze frame and failure records data on the scan tool if applicable. This creates an electronic copy of the data taken when the malfunction occurred. The information is then stored on the scan tool for later reference.
2. If the conditions for the test as described above are met, a DTC P0327 will set and the MIL will illuminate.
4. If the engine has an internal knock or audible noise that causes a knocking type noise on the engine block, the KS may be responding to the noise.

6. Checking the internal resistance of the KS or the wiring to the KS is OK.
7. Any circuitry, that is suspected as causing the complaint, should be thoroughly checked for backed□out terminals, improper mating, broken locks, improperly formed or damaged terminals, poor terminal-to-wiring connections or physical damage to the wiring harness.
8. The replacement ECM must be reprogrammed. Refer to the latest Techline procedure for ECM reprogramming.

DTC P0327 Knock Sensor Circuit Fault

Step	Action	Value(s)	Yes	No
1	Perform an On-Board Diagnostic (OBD) System Check. Is the system check complete?	-	Go to *Step 2*	Go to □On-Board Diagnostic System Check"
2	1. Start the engine. 2. Install a scan tool. 3. Clear the Diagnostic Trouble Codes (DTCs). 4. Operate the vehicle within the Freeze Frame conditions and Conditions for Setting The DTC as noted. Does the Malfunction Indicator Lamp (MIL) illuminate?	120 seconds	Go to *Step 4*	Go to *Step 3*
3	1. Turn the ignition switch ON with the engine OFF. 2. Review the Freeze Frame data and note the parameters. 3. Operate the vehicle within the Freeze Frame conditions and Conditions for Setting The DTC as noted. Does the MIL illuminate?	-	Go to *Step 4*	Go to *Step 12*
4	Listen to the engine while raising and lowering the engine speed. Is a knock or audible noise present?		Go to *Step 5*	Go to *Step 6*
5	Repair the mechanical engine problem or a loose bracket or component. Is the action complete?	-	Go to *Step 12*	-
6	1. Turn the ignition switch OFF. 2. Disconnect the engine control module (ECM) connectors at the ECM. 3. With a digital voltmeter (DVM) connected to ground, measure the resistance of the knock sensor (KS) through the KS signal circuit, terminal A2. Is the measured value within the specified value?	90K-110K Ω	Go to *Step 7*	Go to *Step 9*
7	Check for a poor connection at the ECM connector KS signal circuit and repair as necessary. Is a repair necessary?	-	Go to *Step 12*	Go to *Step 8*
8	Replace the ECM. Is the action complete?	-	Go to *Step 12*	-

DTC P0327 Knock Sensor Circuit Fault (Cont'd)

Step	Action	Value(s)	Yes	No
9	Check the KS electrical connector for a poor connection and repair as necessary. Is a repair necessary?	-	Go to *Step 12*	Go to *Step 10*
10	Check the KS signal circuit for an open or a short to ground or voltage and repair as necessary. Is a repair necessary?	-	Go to *Step 12*	Go to *Step 11*
11	Replace the KS. Is the action complete?	-	Go to *Step 12*	-
12	1. Using the scan tool, clear the DTCs. 2. Start the engine and idle at normal operating temperature. 3. Operate the vehicle within the conditions for setting this DTC as specified in the supporting text. Does the scan tool indicate that this diagnostic has run and passed?	-	Go to *Step 13*	Go to *Step 2*
13	Check if any additional DTCs are set. Are any DTCs displayed that have not been diagnosed?	-	Go to applicable DTC table	System OK

BLANK

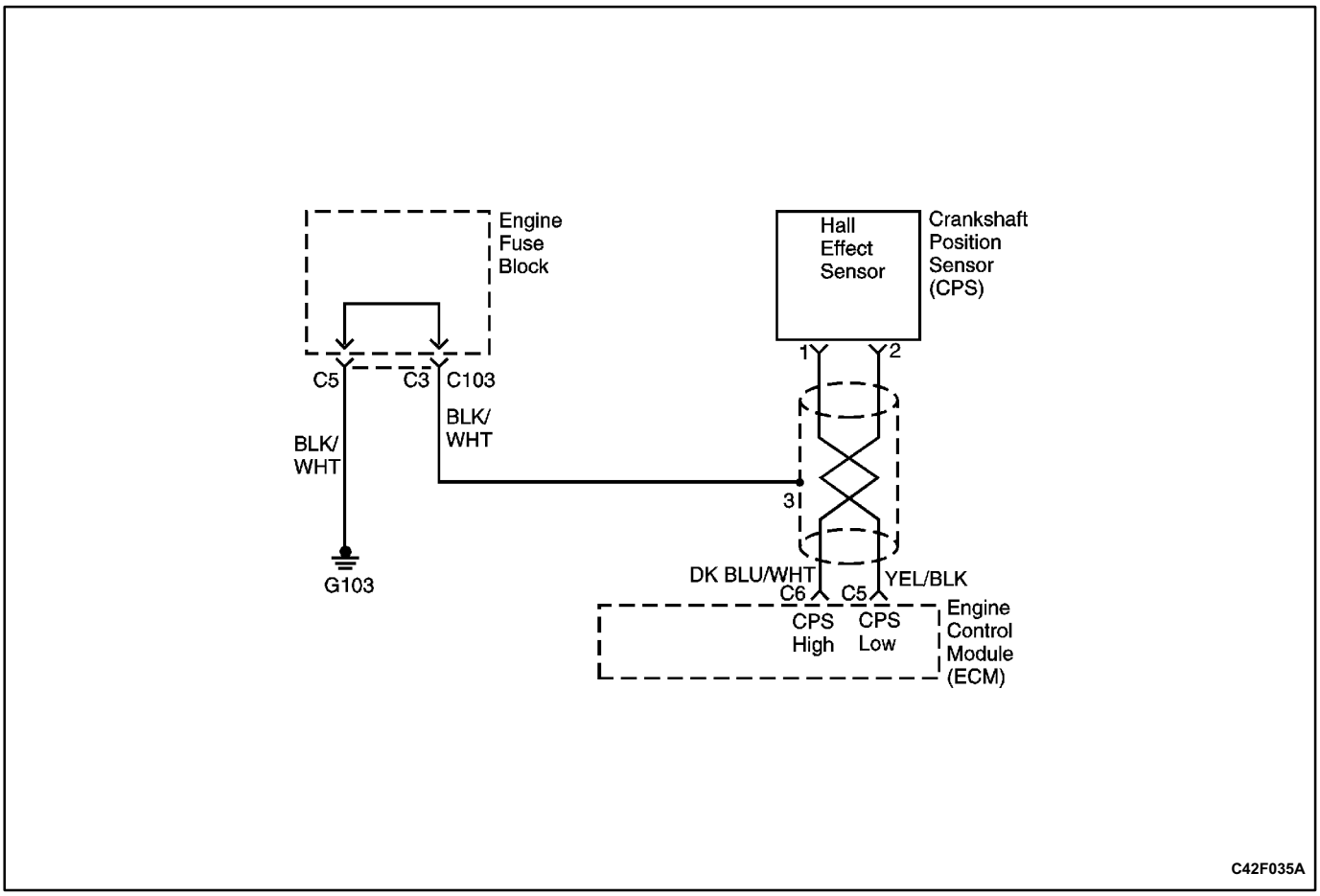

DIAGNOSTIC TROUBLE CODE (DTC) P0336
58X CRANK POSITION EXTRA/MISSING PULSES

Circuit Description

The 58X reference signal is produced by the Crankshaft Position Sensor (CPS). During one crankshaft revolution, 58 crankshaft pulses will be produced. The engine control module (ECM) uses the 58X reference signal to calculate engine rpm and CKP. The ECM constantly monitors the number of pulses on the 58X reference circuit and compares them to the number of camshaft position (CMP) signal pulses being received. If the ECM receives and incorrect number of pulses on the 58X reference circuit, Diagnostic Trouble Code (DTC) P0336 will set.

Conditions for Setting the DTC

- Engine is running.
- Number of extra or missing teeth is greater or equal to 2 per revolution.
- Above condition is detected in 10 of 100 crankshaft rotations.

Action Taken When the DTC Sets

- The ECM will illuminate the Malfunction Indicator Lamp (MIL) after the second consecutive trip in which the fault is detected.
- The ECM will store conditions which were present when the DTC was set as Freeze Frame and in the Failure Records data.

Conditions for Clearing the MIL/DTC

- The ECM will turn the MIL off on the third consecutive trip cycle during which the diagnostic has been run and the fault condition is no longer present.
- A history DTC P0336 will clear after 40 consecutive warmup cycles have occurred without a fault.
- DTC P0336 can be cleared by using the scan tool CLEAR INFO function or by disconnecting the ECM battery feed.

Diagnostic Aids

An intermittent may be caused by a poor connection, rubbedthrough wire insulation or a wire broken inside the insulation. Check for:

- Poor connection - Inspect the ECM harness and connectors for improper mating, broken locks, improperly formed or damaged terminals, and poor terminal-to-wire connections.
- Damaged harness - Inspect the wiring harness for damage. If the harness appears to be OK, disconnect the ECM, turn the ignition ON and observe a voltmeter connected to the 58X reference circuit at the ECM harness connector while moving the connectors and the wiring harnesses related to the ECM. A change in voltage will indicate the location of the fault.

Reviewing the Failure Records vehicle mileage since the diagnostic test last failed may help determine how often the condition that caused the DTC to be set occurs. This may assist in diagnosing the condition.

DTC P0336 58X Crank Position Extra/Missing Pulses

Step	Action	Value(s)	Yes	No
1	Perform an On-Board Diagnostic (OBD) System Check. Is the system check complete?	-	Go to *Step 2*	Go to "On-Board Diagnostic System Check"
2	Attempt to start the engine. Does the engine start?	-	Go to *Step 3*	Refer to "Engine Cranks But Will Not Run"
3	1. Review and record Failure Records information. 2. Clear Diagnostic Trouble Code (DTC) P0336. 3. Start the engine and idle for 1 minute. 4. Observe the DTCs. Is DTC P0336 set?	-	Go to *Step 4*	Refer to "Diagnostic Aids"
4	1. Disconnect the engine control module (ECM) and the crankshaft position sensor (CPS). 2. Check for an open or a short to ground in the 58X reference circuit between the CPS connector and the ECM harness connector. Is a problem found?	-	Go to *Step 5*	Go to *Step 6*
5	Repair the open or short to ground in the 58X reference circuit between the CPS connector and the ECM harness connector. Is the repair complete?	-	Go to *Step 11*	-
6	1. Reconnect the ECM and CPS. 2. Connect a digital voltmeter (DVM) to measure voltage on the 58X reference circuit, terminal C6 at the ECM connector. 3. Observe the voltage while cranking the engine. Is the voltage near the specified value?	2.5 V	Go to *Step 9*	Go to *Step 7*
7	Check the connections at the CPS and replace the terminals if necessary. Do any terminals require replacement?	-	Go to *Step 11*	Go to *Step 8*
8	Replace the CPS. Is the action complete?	-	Go to *Step 11*	-
9	Check the connections at the ECM and replace the terminals if necessary. Do any terminals require replacement?	-	Go to *Step 11*	Go to *Step 10*
10	Replace the ECM. Is the action complete?	-	Go to *Step 11*	-

DTC P0336 58X Crank Position Extra/Missing Pulses (Cont'd)

Step	Action	Value(s)	Yes	No
11	1. Using the scan tool, clear the DTCs. 2. Start the engine and idle at normal operating temperature. 3. Operate the vehicle within the conditions for setting this DTC as specified in the supporting text. Does the scan tool indicate that this diagnostic ran and passed?	-	Go to *Step 12*	Go to *Step 2*
12	Check if any additional DTCs are set. Are any DTCs displayed that have not been diagnosed?	-	Go to applicable DTC table	System OK

BLANK

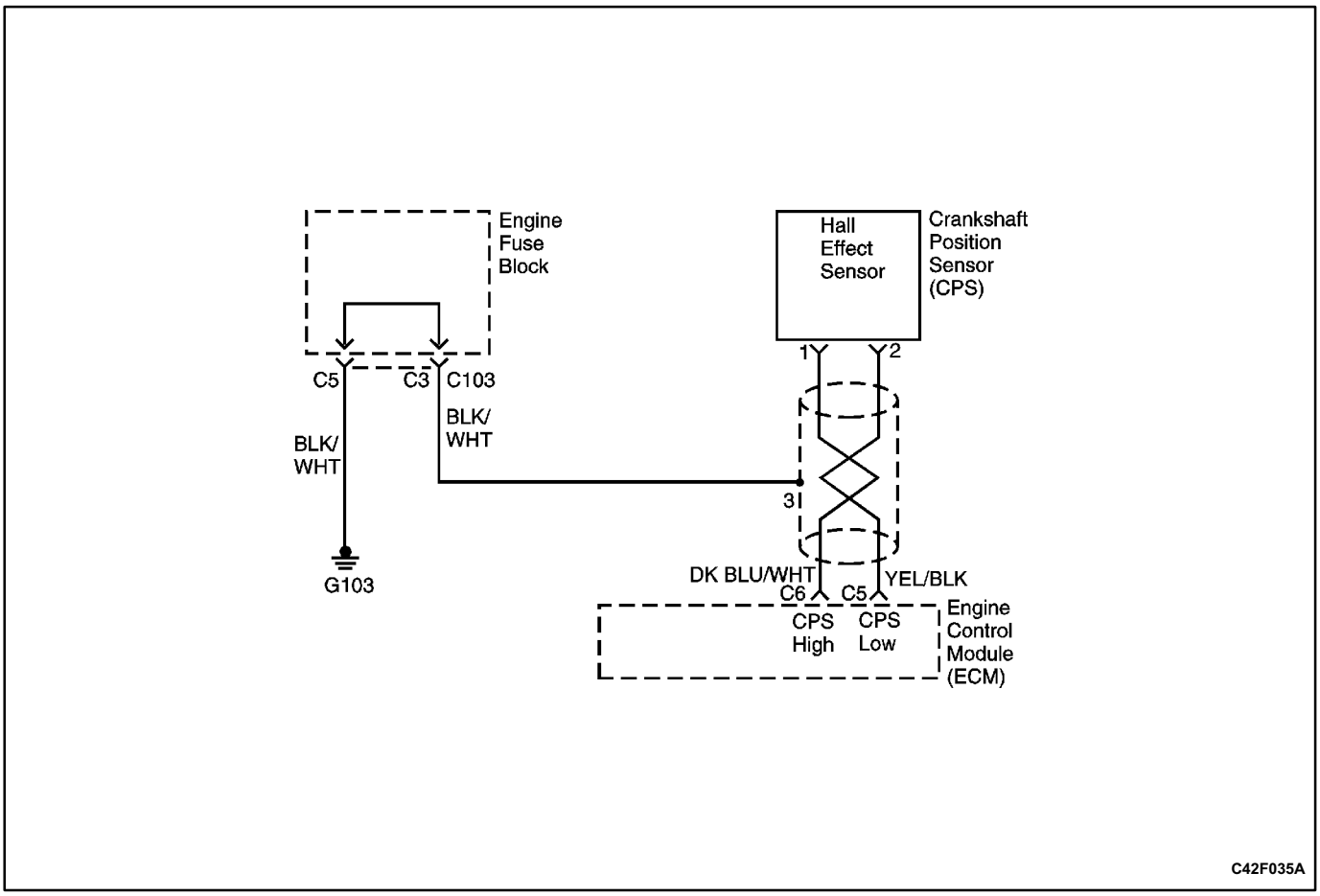

DIAGNOSTIC TROUBLE CODE (DTC) P0337
58X CRANK POSITION NO SIGNAL

Circuit Description

The 58X reference signal is produced by the Crankshaft Position Sensor (CPS). During one crankshaft revolution, 58 crankshaft pulses will be produced. The engine control module (ECM) uses the 58X reference signal to calculate engine rpm and CKP. The ECM constantly monitors the number of pulses on the 58X reference circuit and compares them to the number of camshaft position (CMP) signal pulses being received. If the ECM receives and incorrect number of pulses on the 58X reference circuit, Diagnostic Trouble Code (DTC) P0337 will set.

Conditions for Setting the DTC

- No CMP sensor DTCs are set.
- Engine cranking.

Action Taken When the DTC Sets

- The ECM will illuminate the Malfunction Indicator Lamp (MIL) after the second consecutive trip in which the fault is detected.
- The ECM will store conditions which were present when the DTC was set as Freeze Frame and in the Failure Records data.

Conditions for Clearing the MIL/DTC

- The ECM will turn the MIL OFF on the third consecutive trip cycle during which the diagnostic has been run and the fault condition is no longer present.
- A history DTC P0337 will clear after 40 consecutive warmup cycles have occurred without a fault.
- DTC P0337 can be cleared by using the scan tool CLEAR INFO function or by disconnecting the ECM battery feed.

Diagnostic Aids

An intermittent may be caused by a poor connection, rubbedthrough wire insulation or a wire broken inside the insulation. Check for:

- Poor connection - Inspect the ECM harness and connectors for improper mating, broken locks, improperly formed or damaged terminals, and poor terminal-to-wire connections.
- Damaged harness - Inspect the wiring harness for damage. If the harness appears to be OK, disconnect the ECM, turn the ignition on, and observe a voltmeter connected to the 58X reference circuit at the ECM harness connector while moving connectors

and wiring harnesses related to the ECM. A change in voltage will indicate the location of the fault.

Reviewing the Failure Records vehicle mileage since the diagnostic test last failed may help determine how often the condition that caused the DTC to be set occurs. This may assist in diagnosing the condition.

DTC P0337 58X Crank Position No Signal

Step	Action	Value(s)	Yes	No
1	Perform an On-Board Diagnostic (OBD) System Check. Is the system check complete	-	Go to *Step 2*	Go to "On-Board Diagnostic System Check"
2	1. Disconnect the crankshaft position sensor (CPS). 2. Turn the ignition ON. 3. Using a digital voltmeter (DVM), verify that a 5 v reference and ground are being supplied at the sensor connector terminals 2 and 3. Are a 5 V and ground being supplied to the sensor?	-	Go to *Step 5*	Go to *Step 3*
3	1. Turn the ignition ON. 2. With a DVM, backprobe the engine control module (ECM) connector 5 v reference and signal connectors, terminals C6 and C5. Are a 5 V reference and ground available at the ECM?	-	Go to *Step 4*	Go to *Step 9*
4	Repair the open circuit, short to ground or short to voltage for the 5 V reference or signal between the CPS and the ECM. Is the repair complete?	-	Go to *Step 11*	-
5	1. Turn the Ignition OFF. 2. Disconnect the ECM and CPS 3. Check for an open or a short to ground in the 58X reference circuit between the CPS connector and the ECM harness connector. 4. If a problem is found, repair as necessary. Is a problem found?	-	Go to *Step 11*	Go to *Step 6*
6	1. Reconnect the ECM and CPS. 2. Connect a DVM to measure voltage on the 58X reference circuit at the ECM connector, terminal C6. 3. Observe the voltage while cranking the engine. Is the voltage near the specified value?	2.5 V	Go to *Step 9*	Go to *Step 7*
7	Check the connections at the CPS and replace the terminals if necessary. Do any terminals require replacement?	-	Go to *Step 11*	Go to *Step 8*
8	Replace the CPS. Is the repair complete?	-	Go to *Step 11*	-
9	Check the connections at the ECM and replace the terminals if necessary. Do any terminals require replacement?	-	Go to *Step 11*	Go to *Step 10*
10	Replace the ECM. Is the action complete?	-	Go to *Step 11*	-

DTC P0337 58X Crank Position No Signal (Cont'd)

Step	Action	Value(s)	Yes	No
11	1. Using the scan tool, clear the Diagnostic Trouble Codes (DTCs). 2. Start the engine and idle at normal operating temperature. 3. Operate the vehicle within the conditions for setting this DTC as specified in the supporting text. Does the scan tool indicate that this diagnostic ran and passed?	-	Go to *Step 12*	Go to *Step 2*
12	Check if any additional DTCs are set. Are any DTCs displayed that have not been diagnosed?	-	Go to applicable DTC table	System OK

BLANK

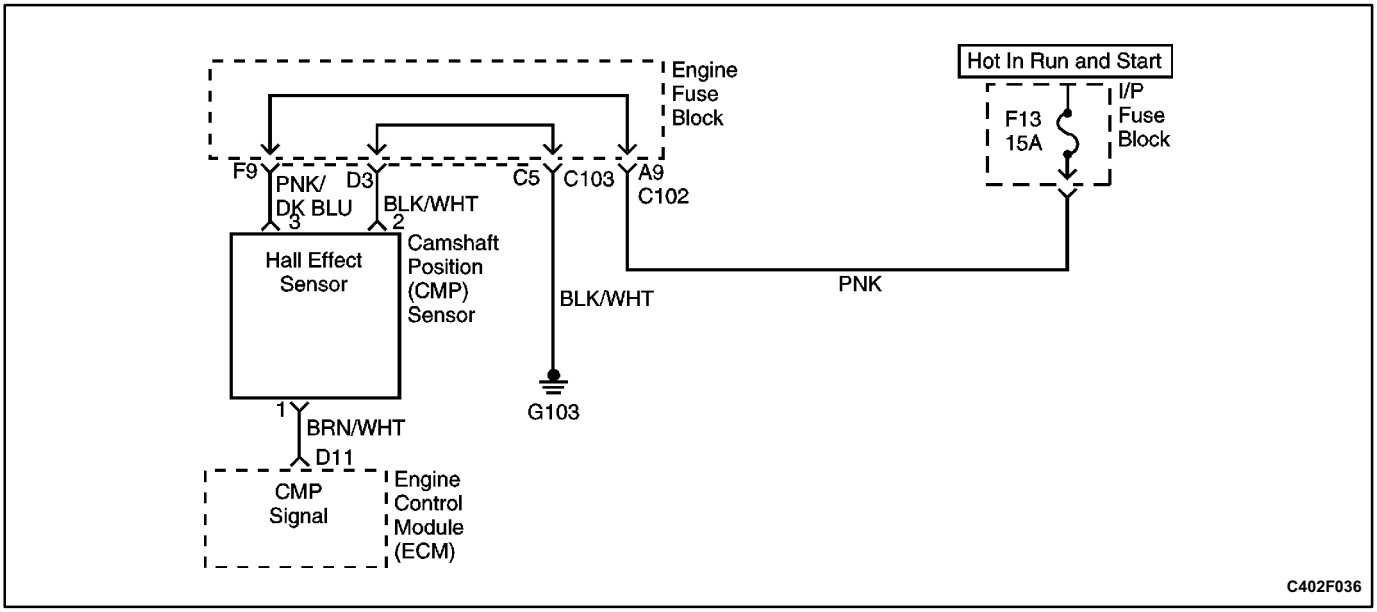

DIAGNOSTIC TROUBLE CODE (DTC) P0342
CAM POSITION NO SIGNAL

System Description

The Camshaft Position (CMP) Sensor is used to correlate crankshaft to camshaft position so that the engine control module (ECM) can determine which cylinder is ready to be fueled by the injector. The CMP is also used to determine which cylinder is misfiring when misfire is present. If the ECM receives an intermittent signal from the CMP, then the CMP Resync Counter will increment. When the ECM cannot use the information from the CMP sensor, a Diagnostic Trouble Code (DTC) is set and the ECM will fuel the engine using the Alternating Synchronous Double Fire (ASDF) method.

Conditions for Setting the DTC

- Engine is running.

Action Taken When the DTC Sets

- The Malfunction Indicator Lamp (MIL) will illuminate.
- The ECM will record operating conditions at the time the diagnostic fails. This information will be stored in the Freeze Frame and Failure Records buffers.
- A history DTC is stored.
- Coolant fan turns on.

Conditions for Clearing the MIL/DTC

- The MIL will turn off after three consecutive ignition cycles in which the diagnostic runs without a fault.
- A history DTC will clear after 40 consecutive warm-up cycles without a fault.
- DTC(s) can be cleared by using the scan tool.

Diagnostic Aids

An intermittent problem may be caused by a poor connection, rubbed-through wire insulation, or a wire that is broken inside the insulation.

Any circuitry, that is suspected as causing the complaint, should be thoroughly checked for the following conditions:

- Backed-out terminals
- Improper mating
- Broken locks
- Improperly formed
- Damaged terminals
- Poor terminal-to-wire connection
- Physical damage to the wiring harness

Test Description

Number(s) below refer to the step number(s) on the Diagnostic Table.

1. The On-Board Diagnostic (OBD) System Check prompts the technician to complete some basic checks and to store the freeze frame and failure records data on the scan tool if applicable. This creates an electronic copy of the data taken when the malfunction occurred. The information is then stored on the scan tool for later reference.
2. This step determines if DTC P0342 is the result of a hard failure or an intermittent condition.
4. Determines if voltage is available to the CMP.
7. This step checks for a signal from the CMP. It is necessary to supply B+ to the ignition feed 2 terminal in order for the CMP to have B+ supplied to it. While cranking the engine, the CMP will send a B+ signal and then a ground signal as the reluctor passes the sensor.
15. The replacement ECM must be reprogrammed. Refer to the latest Techline procedure for ECM reprogramming.

DTC P0342 Cam Position No Signal

Step	Action	Value(s)	Yes	No
1	Perform an On-Board Diagnostic (OBD) System Check. Is the system check complete?	-	Go to *Step 2*	Go to "On-Board Diagnostic System Check"
2	1. Idle the engine. 2. Install a scan tool. Is the Camshaft Position (CMP) Active Counter incrementing?	-	Go to *Step 3*	Go to *Step 4*
3	1. Turn the ignition switch ON with the engine OFF. 2. Review the Freeze Frame data and note the parameters. 3. Operate the vehicle within the Freeze Frame conditions and Conditions for Setting this DTC. Is the CMP Active Counter incrementing?	-	Go to *Step 16*	Go to *Step 4*
4	1. Turn the ignition switch ON with the engine OFF. 2. Disconnect the CMP sensor electrical connector. 3. With a test light connected to ground, probe the CMP positive voltage feed terminal 3. Does the test light illuminate?	-	Go to *Step 5*	Go to *Step 6*
5	With a test light connected to B+, probe the CMP ground terminal 2. Does the test light illuminate?	-	Go to *Step 7*	Go to *Step 8*
6	Check for a poor connection or open in the CMP B+ feed circuit and repair as necessary. Is a repair necessary?	-	Go to *Step 16*	Go to *Step 15*
7	1. Turn the ignition OFF. 2. Disconnect the CMP sensor electrical connectors. 3. Disconnect the engine control module (ECM) connector 2. 4. Install a jumper wire to B+ in the ignition 2 terminal of the ECM connector. 5. With a digital voltmeter (DVM) connected to ground, probe the CMP signal terminal D11 at the ECM connector. 6. Crank the engine. Does the DVM display a voltage varying between the specified values?	0 V B+	Go to *Step 15*	Go to *Step 9*
8	Check for a poor connection or open in the CMP ground circuit and repair as necessary. Is a repair necessary?	-	Go to *Step 16*	Go to *Step 15*
9	Does the DVM display a steady voltage of the specified value?	B+	Go to *Step 10*	Go to *Step 11*
10	Check the CMP signal circuit, terminal D11 for a short to B+ and repair as necessary. Is a repair necessary?	-	Go to *Step 16*	Go to *Step 14*

DTC P0342 Cam Position No Signal (Cont'd)

Step	Action	Value(s)	Yes	No
11	1. Disconnect the CMP electrical connector. 2. With the DVM connected to B+, probe the CMP signal circuit, terminal 1. Does the DVM display a voltage greater than the specified value?	0.5 V	Go to *Step 12*	Go to *Step 13*
12	Repair the short to ground in the CMP signal circuit. Is the action complete?	-	Go to *Step 16*	-
13	Check for a poor connection or an open in the CMP signal circuit and repair as necessary. Is a repair necessary?	-	Go to *Step 16*	Go to *Step 14*
14	Replace the CMP. Is the repair complete?	-	Go to *Step 16*	-
15	Replace the ECM. Is the repair complete?	-	Go to *Step 16*	-
16	1. Using the scan tool, clear the Diagnostic Trouble Codes (DTCs). 2. Start the engine and idle at normal operating temperature. 3. Operate the vehicle within the conditions for setting the DTC as specified in the supporting text. Does the scan tool indicate that this diagnostic has run and passed?	-	Go to *Step 17*	Go to *Step 2*
17	Check if any additional DTCs are set. Are any DTCs displayed that have not been diagnosed?	-	Go to applicable DTC table	System OK

BLANK

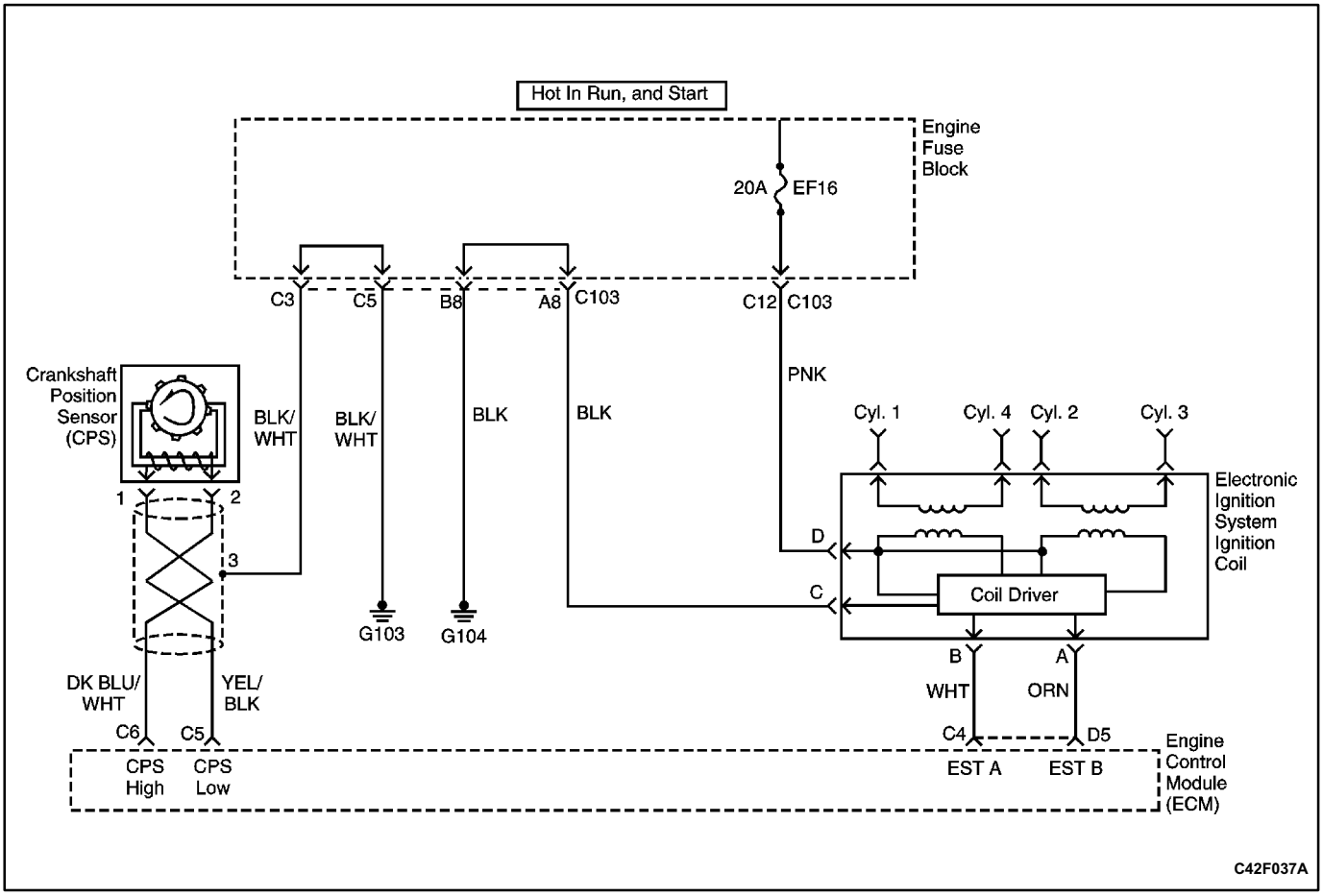

DIAGNOSTIC TROUBLE CODE (DTC) P0351 IGNITION CONTROL A CIRCUIT FAULT

Circuit Description

The engine control module (ECM) provides a ground for the electronic spark timing B circuit. When the ECM removes the ground path of the ignition primary coil, the magnetic field produced by the coil collapses. The collapsing magnetic field produces a voltage in the secondary coil which fires the spark plug.

The circuit between the ECM and the electronic ignition system ignition coil is monitored for an open circuit, short to voltage, and short to ground. When the ECM detects a problem in the electronic spark timing A circuit, it will set Diagnostic Trouble Code (DTC) P0351.

Conditions for Setting the DTC

- Ignition ON.
- Time of fault fall occurrence is greater than the time of the estimated fall occurrence.
- Must receive more than 40 failures within 80 test cycles.

Action Taken When the DTC Sets

- The ECM will illuminate the Malfunction Indicator Lamp (MIL) the first time the fault is detected.
- The ECM will store conditions which were present when the DTC was set as Freeze Frame and in the Failure Records data.

Conditions for Clearing the MIL/DTC

- The ECM will turn the MIL off on the third consecutive trip cycle during which the diagnostic has been run and the fault condition is no longer present.
- A history DTC P0351 will clear after 40 consecutive warmup cycles have occurred without a fault.
- DTC P0351 can be cleared by using the scan tool CLEAR INFO function or by disconnecting the ECM battery feed.

Diagnostic Aids

An intermittent may be caused by a poor connection, rubbedthrough wire insulation or a wire broken inside the insulation. Check for:

- Poor connection - Inspect the ECM harness and connectors for improper mating, broken locks, improperly formed or damaged terminals, and poor terminal-to-wire connection.
- Damaged harness - Inspect the wiring harness for damage. If the harness appears to be OK, disconnect the ECM, turn the ignition on, and observe a voltmeter connected to the 58X reference circuit at the ECM harness connector while moving connectors and wiring harnesses related to the ECM. A change in voltage will indicate the location of the fault.

Reviewing the Failure Records vehicle mileage since the diagnostic test last failed may help determine how often the condition that caused the DTC to be set occurs. This may assist in diagnosing the condition.

DTC P0351 Ignition Control A Circuit Fault

Step	Action	Value(s)	Yes	No
1	Perform an On-Board Diagnostic (OBD) System Check. Is the system check complete?	-	Go to *Step 2*	Go to "On-Board Diagnostic System Check"
2	Check for a faulty connection or a damaged terminal B at the ignition coil. Is a problem found?	-	Go to *Step 8*	Go to *Step 3*
3	Check for a faulty connection or a damaged terminal C4 at the engine control module (ECM) connector. Is a problem found?	-	Go to *Step 8*	Go to *Step 4*
4	1. Turn the ignition OFF. 2. Disconnect the ECM. 3. Check the ignition control circuit for a short to ground. Is a problem found?	-	Go to *Step 8*	Go to *Step 5*
5	Check the ignition control circuit for a short to voltage. Is a problem found?	-	Go to *Step 8*	Go to *Step 6*
6	Check for an open in the ignition control circuit. Is a problem found?	-	Go to *Step 8*	Go to *Step 7*
7	Replace the ECM. Is the action complete?	-	Go to *Step 8*	-
8	1. Using the scan tool, clear the Diagnostic Trouble Codes (DTCs). 2. Start the engine and idle at normal operating temperature. 3. Operate the vehicle within the conditions for setting this DTC as specified in the supporting text. Does the scan tool indicate that this diagnostic ran and passed?	-	Go to *Step 9*	Go to *Step 2*
9	Check if any additional DTCs are set. Are any DTCs displayed that have not been diagnosed?	-	Go to applicable DTC table	System OK

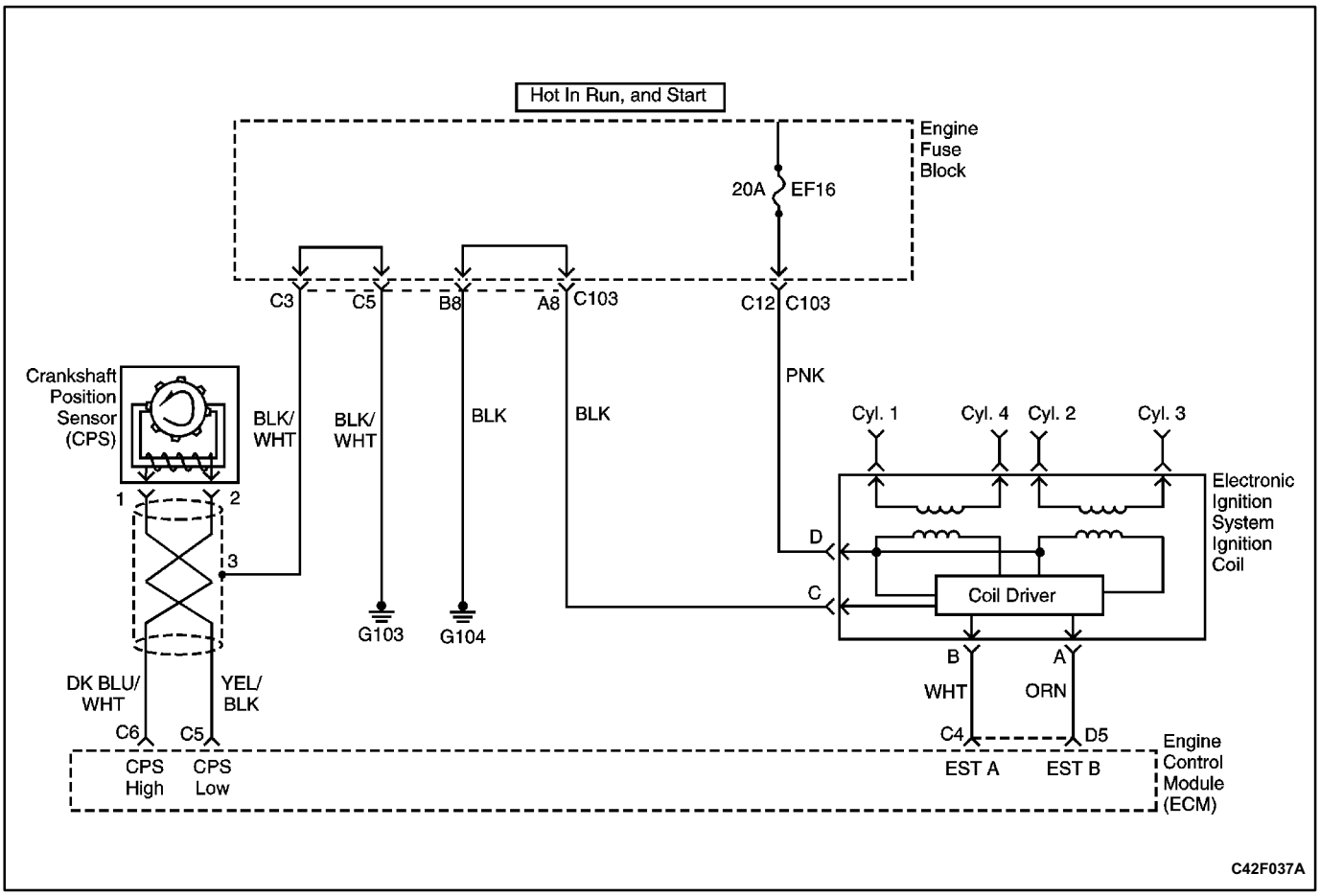

DIAGNOSTIC TROUBLE CODE (DTC) P0352 IGNITION CONTROL B CIRCUIT FAULT

Circuit Description

The engine control module (ECM) provides a ground for the electronic spark timing A circuit. When the ECM removes the ground path of the ignition primary coil, the magnetic field produced by the coil collapses. The collapsing magnetic field produces a voltage in the secondary coil which fires the spark plug.

The circuit between the ECM and the electronic ignition system ignition coil is monitored for an open circuit, short to voltage, and short to ground. When the ECM detects a problem in the electronic spark timing A circuit, it will set Diagnostic Trouble Code (DTC) P0352.

Conditions for Setting the DTC

- Ignition ON.
- Time of fault fall occurrence is greater than the time of the EST fall occurrence.
- Must receive more than 40 failures within 80 test cycles.

Action Taken When the DTC Sets

- The ECM will illuminate the Malfunction Indicator Lamp (MIL) the first time the fault is detected.
- The ECM will store conditions which were present when the DTC was set as Freeze Frame and in the Failure Records data.

Conditions for Clearing the MIL/DTC

- The ECM will turn the MIL off on the third consecutive trip cycle during which the diagnostic has been run and the fault condition is no longer present.
- A history DTC P0352 will clear after 40 consecutive warmup cycles have occurred without a fault.
- DTC P0352 can be cleared by using the scan tool CLEAR INFO function or by disconnecting the ECM battery feed.

Diagnostic Aids

An intermittent may be caused by a poor connection, rubbed through wire insulation or a wire broken inside the insulation. Check for:

- Poor connection - Inspect the ECM harness and connectors for improper mating, broken locks, improperly formed or damaged terminals, and poor terminal to wire connection.
- Damaged harness - Inspect the wiring harness for damage. If the harness appears to be OK, disconnect the ECM, turn the ignition on, and observe a voltmeter connected to the 58X reference circuit at the ECM harness connector while moving connectors and wiring harnesses related to the ECM. A change in voltage will indicate the location of the fault.

Reviewing the Failure Records vehicle mileage since the diagnostic test last failed may help determine how often the condition that caused the DTC to be set occurs. This may assist in diagnosing the condition.

DTC P0352 Ignition Control B Circuit Fault

Step	Action	Value(s)	Yes	No
1	Perform an On-Board Diagnostic (OBD) System Check. Is the system check complete?	-	Go to *Step 2*	Go to "On-Board Diagnostic System Check"
2	Check for a faulty connection or a damaged terminal A at the ignition coil. Is a problem found?	-	Go to *Step 8*	Go to *Step 3*
3	Check for a faulty connection or a damaged terminal D5 at the engine control module (ECM) connector. Is a problem found?	-	Go to *Step 8*	Go to *Step 4*
4	1. Turn the ignition OFF. 2. Disconnect the ECM. 3. Check the ignition control circuit for a short to ground. Is a problem found?	-	Go to *Step 8*	Go to *Step 5*
5	Check the ignition control circuit for a short to voltage. Is a problem found?	-	Go to *Step 8*	Go to *Step 6*
6	Check for an open in the ignition control circuit. Is a problem found?	-	Go to *Step 8*	Go to *Step 7*
7	Replace the ECM. Is the action complete?	-	Go to *Step 8*	-
8	1. Using the scan tool, clear the Diagnostic Trouble Codes (DTCs). 2. Start the engine and idle at normal operating temperature. 3. Operate the vehicle within the conditions for setting this DTC as specified in the supporting text. Does the scan tool indicate that this diagnostic ran and passed?	-	Go to *Step 9*	Go to *Step 2*
9	Check if any additional DTCs are set. Are any DTCs displayed that have not been diagnosed?	-	Go to applicable DTC table	System OK

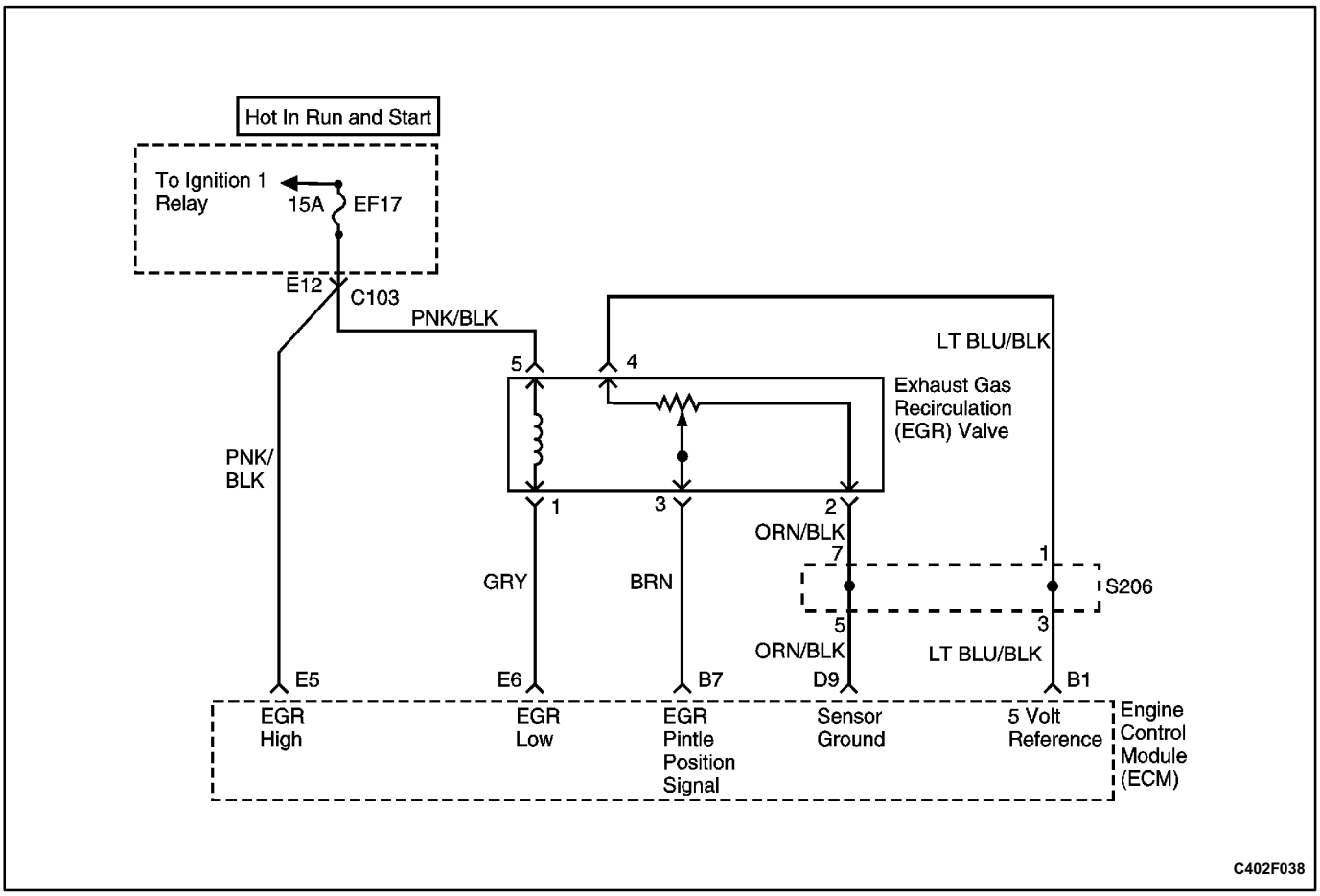

DIAGNOSTIC TROUBLE CODE (DTC) P0404
EXHAUST GAS RECIRCULATION OPEN VALVE POSITION ERROR

Circuit Description

An Exhaust Gas Recirculation (EGR) system is used to lower Oxides of Nitrogen (NOx) emission levels caused by high combustion temperatures. It accomplishes this by feeding small amounts of exhaust gases back into the combustion chamber. When the air/fuel mixture is diluted with the exhaust gasses, combustion temperatures are reduced.

A linear EGR valve is used on this system. The linear EGR valve is designed to accurately supply exhaust gases to the engine without the use of intake manifold vacuum. The valve controls exhaust flow going into the intake manifold from the exhaust manifold through an orifice with an engine control module (ECM) controlled pintle. The ECM controls the pintle position using inputs from the Throttle Position (TP) and Manifold Absolute Pressure (MAP) sensors. The ECM then commands the EGR valve to operate when necessary by controlling an ignition signal through the ECM. This can be monitored on a scan tool as the Desired EGR Position.

The ECM monitors the results of its command through a feedback signal. By sending a 5 volt reference and a ground to the EGR valve, a voltage signal representing the EGR valve pintle position is sent to the ECM. This feedback signal can also be monitored on a scan tool and is the actual position of the EGR pintle. The Actual EGR Position should always be near the commanded or Desired EGR Position.

This DTC will detect an open valve position.

Conditions for Setting the DTC

- Ignition voltage is between 11 v and 16 v.
- The change of defired EGR position is less than 2%.
- Engine running.
- Coolant temperature is greater than 2°C.
- EGR commanded ON (Desired EGR Position is greater than 0%).
- Actual EGR Position differs from Desired EGR Position by more than 15% for 18 seconds.

Action Taken When the DTC Sets

- The Malfunction Indicator Lamp (MIL) will illuminate after two consecutive ignition cycles in which the diagnostic runs with the fault active.
- The ECM will record operating conditions at the time the diagnostic fails. This information will be stored in the Freeze Frame and Failure Records buffers.
- A history DTC is stored.
- Coolant fan turns on.
- EGR is disabled.

Conditions for Clearing the MIL/DTC

- The MIL will turn off after three consecutive ignition cycles in which the diagnostic runs without a fault.
- A history DTC will clear after 40 consecutive warm up cycles without a fault.
- DTC(s) can be cleared by using the scan tool.

Diagnostic Aids

Due to moisture associated with exhaust systems, the EGR valve may freeze and stick in cold weather at times. After the vehicle is brought into a warm shop for repairs, the valve warms and the problem disappears. By watching the Actual EGR and Desired EGR Positions on a cold vehicle with a scan tool, the fault can be easily verified. Check the freeze frame data to determine if the DTC set when the vehicle was cold by viewing the Engine Coolant Temperature (CTS).

Test Description

Number(s) below refer to the step number(s) on the Diagnostic Table.

1. The On-Board Diagnostic (OBD) System Check prompts the technician to complete some basic checks and store the freeze frame and failure records data on the scan tool if applicable. This creates an electronic copy of the data taken when the malfunction occurred. The information is then stored on the scan tool for later reference.
2. Commanding the EGR valve open determines whether the EGR system can control the EGR valve accurately and if the fault is present. The difference between the current and commanded position is greater than 15%.
3. When the EGR valve electrical connector is disconnected, the scan tool should display the Actual EGR Position as 0%. If it does not, the fault lies either in the EGR signal circuit or the ECM.
4. A test light, when connected to ground, will glow dimly when the EGR valve is commanded to 25%, and brighter as the EGR valve is commanded to 100%. If the light flashes, check the sensor ground for an open.
5. An open or poor connection condition may have caused this DTC to set. Be sure to check the terminals for being backed out, improperly formed or damaged, and for poor tension.
7. The test light will have glowed brightly in the previous step if the EGR control circuit was shorted to B+ and the Actual EGR Position on the scan tool will display 100%. A test light that did not illuminate, indicates that the circuit may be open or shorted to ground.
9. If the EGR valve 5 volt reference is shorted to voltage, the digital voltmeter (DVM) will read battery voltage and additional DTCs may be set and the engine performance will be poor.
12. The replacement ECM must be reprogrammed. Refer to the latest Techline procedure for ECM reprogramming.
13. Although the circuitry acted correctly when checked, a problem may still lie within the terminals which would not show up in probe type testing. Be sure to check the terminals for being backed out, improperly formed or damaged, and for poor tension.
17. All circuits to the EGR valve are OK at this point. The fault lies internally in the EGR valve and therefore must be replaced. Be sure all gasket material is removed from the EGR mounting surface. Even a small amount of material may cause a DTC P0401 to set.
18. Check the terminals for being backed out, improperly formed or damaged, and for poor tension.
19. Clearing DTCs is a very important step for this diagnostic. The clearing function allows the EGR valve to relearn a new pintle position as the old pintle position was inaccurate due to the failure that caused the DTC. The DTC must be cleared with the ignition ON, engine OFF or when the engine is idling. If the ECM sees a EGR command, the new pintle will not be learned.
20. If no malfunctions have been found at this point and no additional DTCs were set, refer to "Diagnostic Aids" in this section for additional checks and information.

DTC P0404 Exhaust Gas Recirculation Open Valve Position Error

Step	Action	Value(s)	Yes	No
1	Perform an On-Board Diagnostic (OBD) System Check. Is the check complete?	-	Go to *Step 2*	Go to "On-Board Diagnostic System Check"

DTC P0404 Exhaust Gas Recirculation Open Valve Position Error (Cont'd)

Step	Action	Value(s)	Yes	No
2	1. Turn the ignition switch ON with the engine OFF. 2. Install a scan tool. 3. Command the Exhaust Gas Recirculation (EGR) valve to the specified values. Does the Actual EGR Position follow the Desired EGR Position?	25%, 50%, 75%, 100%	Go to *Step 19*	Go to *Step 3*
3	1. Turn the ignition switch ON, with the engine OFF. 2. Disconnect the EGR valve electrical connector. 3. With a test light connected to B+, probe the ground circuit at terminal 2 to the EGR valve. Does the test light illuminate?	-	Go to *Step 4*	Go to *Step 5*
4	1. Connect the test light to ground. 2. Probe the EGR control circuit at terminal 1 to the EGR valve. 3. Command the EGR valve to the specified values using a scan tool. After the command is raised, does the test light glow brighter, flash or maintain a steady glow?	25%, 50%, 75%, 100%	Go to *Step 6*	Go to *Step 7*
5	Repair the open or poor connection in the EGR ground circuit. Is the action complete?	-	Go to *Step 19*	-
6	With a test light still connected to ground, probe the signal circuit at terminal 3. Does the test light illuminate?	-	Go to *Step 8*	Go to *Step 9*
7	With the test light still connected to ground, again probe the control circuit without commanding the EGR valve with the scan tool. Does the test light illuminate?	-	Go to *Step 10*	Go to *Step 11*
8	Check the signal circuit for a short to voltage and repair as necessary. Is a repair necessary?	-	Go to *Step 19*	Go to *Step 12*
9	With a digital voltmeter (DVM) connected to ground, probe the 5 v reference circuit at terminal 4. Is the voltage measured near the specified value?	5 V	Go to *Step 13*	Go to *Step 14*
10	Check the control circuit for a short to voltage and repair as necessary. Is a repair necessary.	-	Go to *Step 19*	Go to *Step 12*
11	Connect the test light to B+ and again probe the control circuit. Does the test light illuminate?	-	Go to *Step 15*	Go to *Step 16*
12	Replace the engine control module (ECM). Is the action complete?	-	Go to *Step 19*	-
13	Check the EGR ground circuit at terminal D9 for a poor connection or proper terminal tension at the ECM and repair as necessary. Is a repair necessary?	-	Go to *Step 19*	Go to *Step 17*
14	Check the 5 v reference circuit for a short to voltage and repair as necessary. Is a repair necessary?	-	Go to *Step 19*	Go to *Step 12*

DTC P0404 Exhaust Gas Recirculation Open Valve Position Error (Cont'd)

Step	Action	Value(s)	Yes	No
15	Check the control circuit for a short to ground and repair as necessary. Is a repair necessary?	-	Go to *Step 19*	Go to *Step 12*
16	Check the control circuit for an open or poor connection at the EGR valve electrical connector and repair as necessary. Is a repair necessary?	-	Go to *Step 19*	Go to *Step 18*
17	Replace the EGR valve. Is the action complete?	-	Go to *Step 19*	-
18	Check the ECM electrical connector for a poor connection and repair as necessary.	-	Go to *Step 19*	Go to *Step 12*
19	1. Using the scan tool, clear the Diagnostic Trouble Codes (DTCs). 2. Start the engine and idle at normal operating temperature. 3. Operate the vehicle within the conditions for setting this DTC as specified in the supporting text. Does the scan tool indicate that this diagnostic ran and passed?	-	Go to *Step 7*	Go to *Step 2*
20	Check if any additional DTCs are set. Are any DTCs displayed that have not been diagnosed?	-	Go to applicable DTC table	System OK

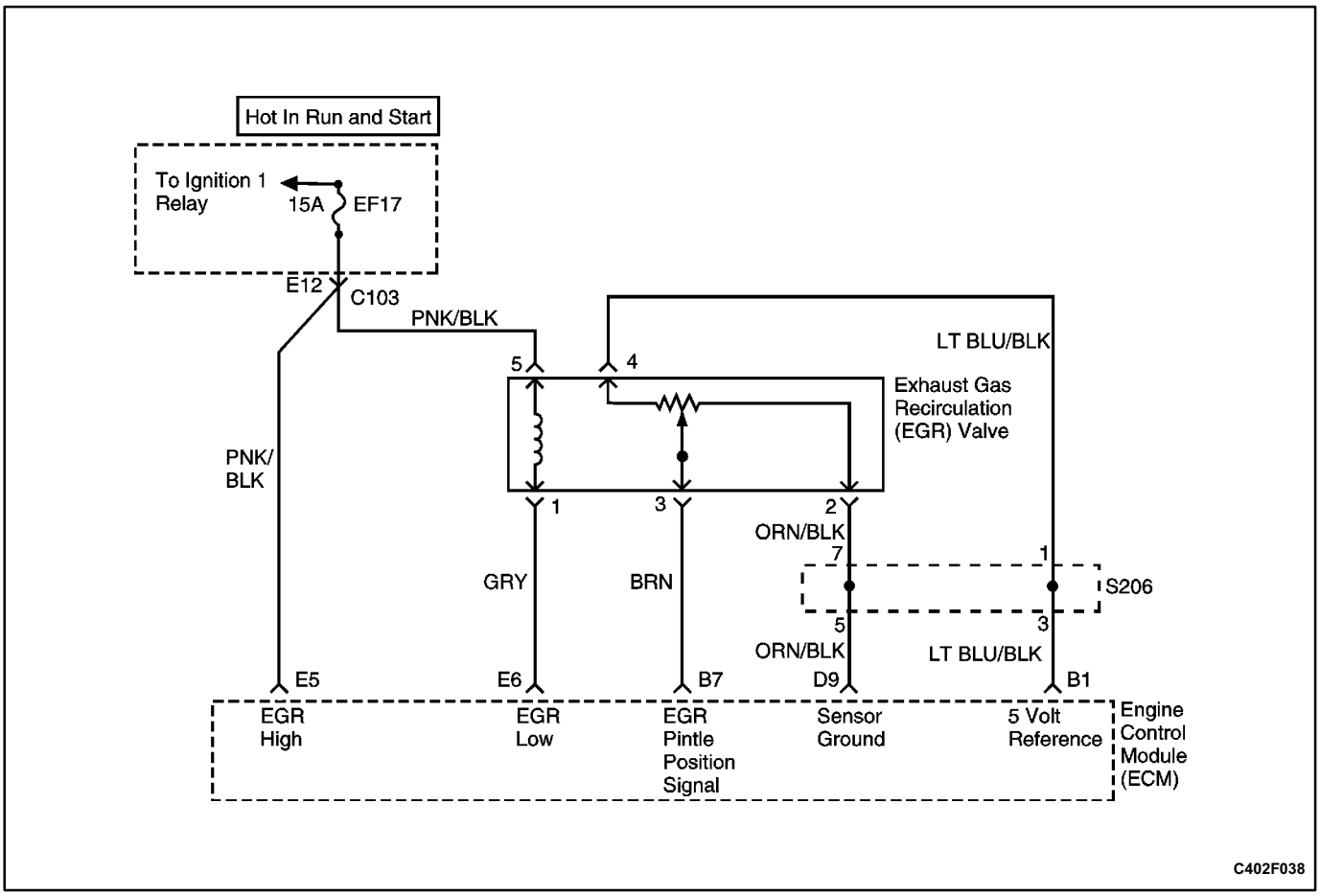

DIAGNOSTIC TROUBLE CODE (DTC) P0405
EXHAUST GAS RECIRCULATION PINTLE POSITION LOW VOLTAGE

Circuit Description

An Exhaust Gas Recirculation (EGR) system is used to lower Oxides of Nitrogen (NOx) emission levels caused by high combustion temperatures. It accomplishes this by feeding small amounts of exhaust gases back into the combustion chamber. When the air/fuel mixture is diluted with the exhaust gases, combustion temperatures are reduced.

A linear EGR valve is used on this system. The linear EGR valve is designed to accurately supply exhaust gases to the engine without the use of intake manifold vacuum. The valve controls exhaust flow going into the intake manifold from the exhaust manifold through an orifice with an engine control module (ECM) controlled pintle. The ECM controls the pintle position using inputs from the Throttle Position (TP) and the Manifold Absolute Pressure (MAP) sensors. The ECM then commands the EGR valve to operate when necessary by controlling an ignition signal through the ECM. This can be monitored on a scan tool as the Desired EGR Position.

The ECM monitors the results of its command through a feedback signal. By sending a 5 volt reference and a ground to the EGR valve, a voltage signal representing the EGR valve pintle position is sent to the ECM. This feedback signal can also be monitored on a scan tool and is the actual position of the EGR pintle. The Actual EGR Position should always be near the commanded or Desired EGR Position.

This Diagnostic Trouble Code (DTC) will detect an open or short circuit.

Conditions for Setting the DTC

- Ignition voltage is between 11 V and 16 V.
- Engine running.

Action Taken When the DTC Sets

- The Malfunction Indicator Lamp (MIL) will illuminate after two consecutive ignition cycles in which the diagnostic runs with the fault active.
- The ECM will record operating conditions at the time the diagnostic fails. This information will be stored in the Freeze Frame and Failure Records buffers.
- A history DTC is stored.
- EGR is disabled.

Conditions for Clearing the MIL/DTC

- The MIL will turn off after three consecutive ignition cycles in which the diagnostic runs without a fault.
- A history DTC will clear after 40 consecutive warm-up cycles without a fault.

- DTC(s) can be cleared by using the scan tool.

Diagnostic Aids

Due to moisture associated with exhaust systems, the EGR valve may freeze and stick in cold weather. After the vehicle is brought into a warm shop for repairs, the valve warms and the problem disappears. By watching the Actual EGR and Desired EGR Positions on a cold vehicle with a scan tool, the fault can be easily verified. Check the freeze frame data to determine if the DTC set when the vehicle was cold by viewing the Engine Coolant Temperature (CTS).

Test Description

Number(s) below refer to the step number(s) on the Diagnostic Table.

1. The On-Board Diagnostic (OBD) System Check prompts the technician to complete some basic checks and store the freeze frame and failure records data on the scan tool if applicable. This creates an electronic copy of the data taken when the malfunction occurred. The information is then stored on the scan tool for later reference.
2. Commanding the EGR valve open determines whether the EGR system can control the EGR valve accurately and if the fault is present.
3. If the EGR valve 5 volt reference is shorted to ground, the digital voltmeter (DVM) will read no voltage and additional DTCs may be set and the engine performance will be poor. When this circuit is open, only a DTC P0405 will be set.
4. Jumping the 5 volt reference circuit to the signal circuit checks the signal circuit and the ECM. The scan tool should display the Actual EGR Position as 100% if the signal circuit and ECM are OK.
6. Although the ECM and circuitry acted correctly in the previous step, a problem may still lie within the terminals which would not show up in probe type testing. Be sure to check the terminals for being backed out, improperly formed or damaged, and for poor tension.
10. All circuits to the EGR valve are OK at this point. The fault lies internally in the EGR valve and therefore must be replaced. Be sure all gasket material is removed from the EGR mounting surface. Even a small amount of material may cause a DTC P0401 to set.
13. The replacement ECM must be reprogrammed. Refer to the latest Techline procedure for ECM reprogramming.
14. Check the terminals for being backed out, improperly formed or damaged, and for poor tension.
15. Clearing DTCs is a very important step for this diagnostic. The clearing function allows the EGR valve to relearn a new pintle position as the old pintle position was inaccurate due to the failure that caused the DTC. The DTC must be cleared with the ignition ON, engine OFF or when the engine is idling. If the ECM sees an EGR command, the new pintle will not be learned.
16. If no malfunctions have been found at this point and no additional DTCs were set, refer to Diagnostic Aids for additional checks and information.

DTC P0405 Exhaust Gas Recirculation Pintle Position Low Voltage

Step	Action	Value(s)	Yes	No
1	Perform an On-Board Diagnostic (OBD) System Check. Is the system check complete?	-	Go to *Step 2*	Go to "On-Board Diagnostic System Check"
2	1. Turn the ignition switch ON, with the engine OFF. 2. Install a scan tool. 3. Command the Exhaust Gas Recirculation (EGR) valve to the specified values. Does the Actual EGR Position follow the Desired EGR Position?	25%, 50%, 75%, 100%	Go to *Step 19*	Go to *Step 3*
3	1. Turn the ignition switch ON with the engine OFF. 2. Disconnect the EGR valve electrical connector. 3. With a digital voltmeter (DVM) connected to ground, probe the 5 volt reference circuit at terminal 4 to the EGR valve. Does the DVM read near the specified value?	5 V	Go to *Step 4*	Go to *Step 5*

DTC P0405 Exhaust Gas Recirculation Pintle Position Low Voltage (Cont'd)

Step	Action	Value(s)	Yes	No
4	Jumper the 5 volt reference circuit to the signal circuit at terminals 4 and 3. Does the Actual EGR Position display the specified value?	100%	Go to *Step 6*	Go to *Step 7*
5	1. Connect the test light to B+. 2. Probe the 5 volt reference circuit to the EGR valve. Does the test light illuminate?	-	Go to *Step 8*	Go to *Step 9*
6	Check the 5 volt reference and signal circuit for a poor connection or proper terminal tension and repair as necessary. Is a repair necessary?	-	Go to *Step 15*	Go to *Step 10*
7	1. Connect the test light to B+. 2. Probe the signal circuit at terminal 3 to the EGR valve. Does the test light illuminate?	-	Go to *Step 11*	Go to *Step 12*
8	Check for a short to ground in the EGR valve 5 volt reference circuit and repair as necessary. Is a repair necessary?	-	Go to *Step 15*	Go to *Step 13*
9	Check for an open in the EGR 5 volt reference circuit and repair as necessary. Is a repair necessary?	-	Go to *Step 15*	Go to *Step 14*
10	Replace the EGR valve. Is the action complete?	-	Go to *Step 15*	-
11	Check for a short to ground in the EGR valve signal circuit and repair as necessary. Is a repair necessary?	-	Go to *Step 15*	Go to *Step 13*
12	Check for an open in the EGR valve signal circuit and repair as necessary. Is a repair necessary?	-	Go to *Step 15*	Go to *Step 14*
13	Replace the engine control module (ECM). Is the action complete?	-	Go to *Step 19*	-
14	Check the affected circuit for a poor connection or proper terminal tension at the ECM and repair as necessary. Is a repair necessary?	-	Go to *Step 15*	Go to *Step 13*
15	1. Using the scan tool, clear the Diagnostic Trouble Codes (DTCs). 2. Start the engine and idle at normal operating temperature. 3. Operate the vehicle within the conditions for setting this DTC as specified in the supporting text. Does the scan tool indicate that this diagnostic ran and passed?	-	Go to *Step 7*	Go to *Step 2*
16	Check if any additional DTCs are set. Are any DTCs displayed that have not been diagnosed?	-	Go to applicable DTC table	System OK

BLANK

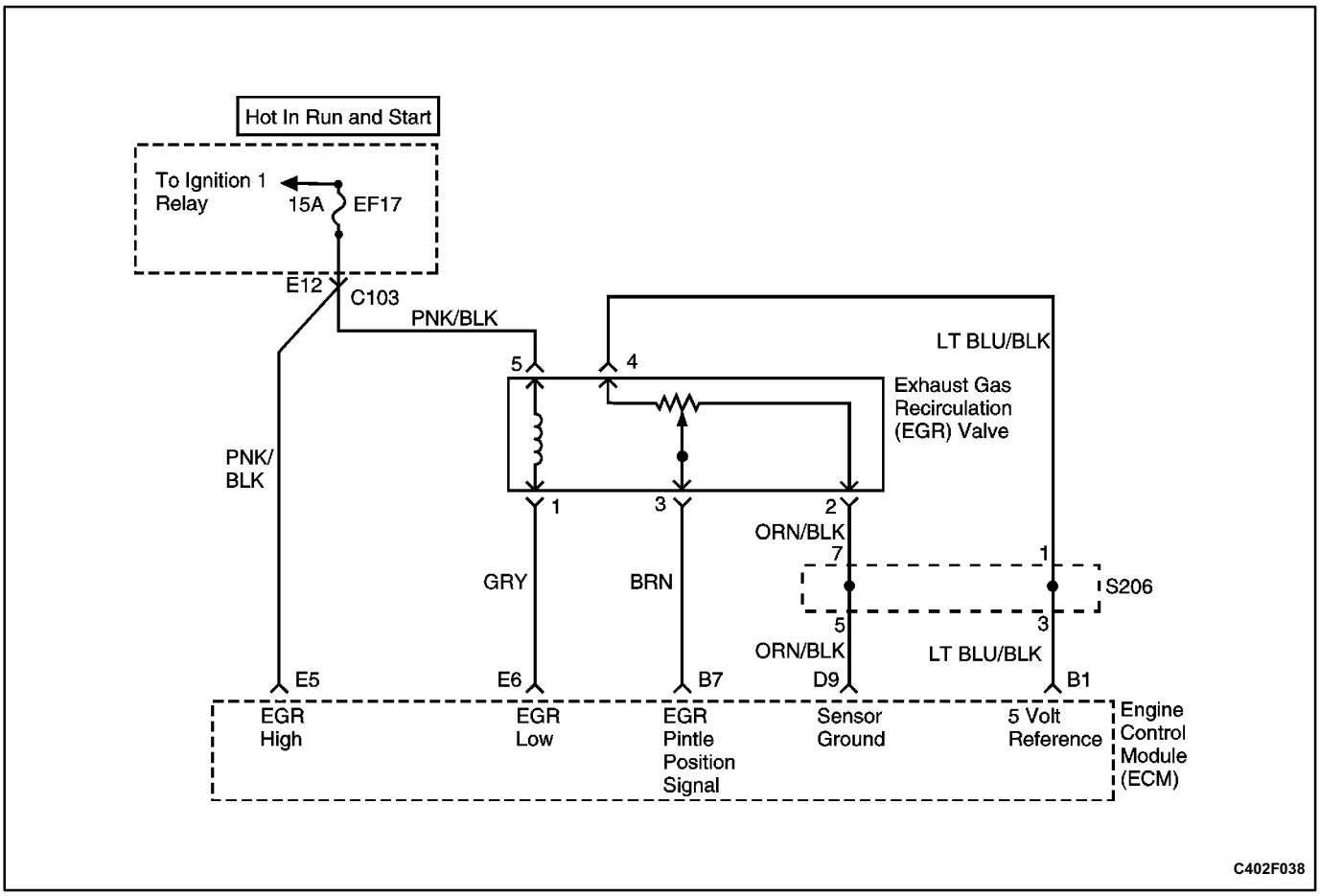

DIAGNOSTIC TROUBLE CODE (DTC) P0406
EXHAUST GAS RECIRCULATION PINTLE POSITION HIGH VOLTAGE

Circuit Description

An Exhaust Gas Recirculation (EGR) system is used to lower Oxides of Nitrogen (NOx) emission levels caused by high combustion temperatures. It accomplishes this by feeding small amounts of exhaust gases back into the combustion chamber. When the air/fuel mixture is diluted with the exhaust gases, combustion temperatures are reduced.

A linear EGR valve is used on this system. The linear EGR valve is designed to accurately supply exhaust gases to the engine without the use of intake manifold vacuum. The valve controls exhaust flow going into the intake manifold from the exhaust manifold through an orifice with an engine control module (ECM) controlled pintle. The ECM controls the pintle position using inputs from the Throttle Position (TP) and Manifold Absolute Pressure (MAP) sensors. The ECM then commands the EGR valve to operate when necessary by controlling an ignition signal through the ECM. This can be monitored on a scan tool as the Desired EGR Position.

The ECM monitors the results of its command through a feedback signal. By sending a 5 volt reference and a ground to the EGR valve, a voltage signal representing the EGR valve pintle position is sent to the ECM. This feedback signal can also be monitored on a scan tool and is the actual position of the EGR pintle. The Actual EGR Position should always be near the commanded or Desired EGR Position.

Conditions for Setting the DTC

- Engine running.
- Ignition voltage is between 11 v and 16 v.
- A malfunction is present for more than 5 seconds.
- EGR position signal is greater than 250 counts (4.9 v).

Action Taken When the DTC Sets

- The Malfunction Indicator Lamp (MIL) will illuminate after two consecutive ignition cycles in which the diagnostic runs with the fault active.
- The ECM will record operating conditions at the time the diagnostic fails. This information will be stored in the Freeze Frame and Failure Records buffers.
- A history Diagnostic Trouble Code (DTC) is stored.
- EGR is disabled.

Conditions for Clearing the MIL/DTC

- The MIL will turn off after three consecutive ignition cycles in which the diagnostic runs without a fault.
- A history DTC will clear after 40 consecutive warm-up cycles without a fault.

- DTC(s) can be cleared by using the scan tool.

Diagnostic Aids

Due to moisture associated with exhaust systems, the EGR valve may freeze and stick in cold weather. After the vehicle is brought into a warm shop for repairs, the valve warms and the problem disappears. By watching the Actual EGR and Desired EGR Positions on a cold vehicle with a scan tool, the fault can be easily verified. Check the freeze frame data to determine if the DTC set when the vehicle was cold by viewing the Engine Coolant Temperature (CTS).

Test Description

Number(s) below refer to the step number(s) on the Diagnostic Table.

1. The On-Board Diagnostic (OBD) System Check prompts the technician to complete some basic checks and store the freeze frame and failure records data on the scan tool if applicable. This creates an electronic copy of the data taken when the malfunction occurred. The information is then stored on the scan tool for later reference.
2. Commanding the EGR valve open determines whether the EGR system can control the EGR valve accurately and if the fault is present.
3. If the EGR valve 5 volt reference is shorted to ground, the digital voltmeter (DVM) will read no voltage and additional DTCs may be set and the engine performance will be poor. When this circuit is open, only a DTC P0405 will be set.
4. Jumpering the 5 volt reference circuit to the signal circuit checks the signal circuit and the ECM. The scan tool should display the Actual EGR Position as 100% if the signal circuit and ECM are OK.
6. Although the ECM and circuitry acted correctly in the previous step, a problem may still lie within the terminals which would not show up in probe type testing. Be sure to check the terminals for being backed out, improperly formed or damaged, and for poor tension.
10. All circuits to the EGR valve are OK at this point. The fault lies internally in the EGR valve and therefore must be replaced. Be sure all gasket material is removed from the EGR mounting surface. Even a small amount of material may cause a DTC P0401 to set.
13. The replacement ECM must be reprogrammed. Refer to the latest Techline procedure for ECM reprogramming.
14. Check the terminals for being backed out, improperly formed or damaged, and for poor tension.
15. Clearing the DTCs is a very important step for this diagnostic. The clearing function allows the EGR valve to relearn a new pintle position as the old pintle position was inaccurate due to the failure that caused the DTC. The DTC must be cleared with the ignition ON, engine OFF or when the engine is idling. If the ECM sees a EGR command, the new pintle will not be learned.
16. If no malfunctions have been found at this point and no additional DTCs were set, refer to "Diagnostic Aids" in this section for additional checks and information.

DTC P0406 Exhaust Gas Recirculation Pintle Position High Voltage

Step	Action	Value(s)	Yes	No
1	Perform an On-Board Diagnostic (OBD) System Check. Is the system check complete?	-	Go to *Step 2*	Go to "On-Board Diagnostic System Check"
2	1. Turn the ignition switch ON with the engine OFF. 2. Install a scan tool. 3. Command the Exhaust Gas Recirculation (EGR) valve to the specified values. Does the Actual EGR Position follow the Desired EGR Position?	25%, 50%, 75%, 100%	Go to *Step 19*	Go to *Step 3*
3	1. Turn the ignition switch ON with the engine OFF. 2. Disconnect the EGR valve electrical connector. 3. With a digital voltmeter (DVM) connected to ground, probe the 5 V reference circuit at terminal 4 to the EGR valve. Does the DVM read near the specified value?	5 V	Go to *Step 4*	Go to *Step 5*

DTC P0406 Exhaust Gas Recirculation Pintle Position High Voltage (Cont'd)

Step	Action	Value(s)	Yes	No
4	Jumper the 5 volt reference circuit to the signal circuit at terminals 4 and 3. Does the Actual EGR Position display the specified value?	100%	Go to *Step 6*	Go to *Step 7*
5	1. Connect the test light to B+. 2. Probe the 5 V reference circuit to the EGR valve. Does the test light illuminate?	-	Go to *Step 8*	Go to *Step 9*
6	Check the 5 V reference and signal circuit for a poor connection or proper terminal tension and repair as necessary. Is a repair necessary?	-	Go to *Step 15*	Go to *Step 10*
7	1. Connect the test light to B+. 2. Probe the signal circuit at terminal 3 to the EGR valve. Does the test light illuminate?	-	Go to *Step 11*	Go to *Step 12*
8	Check for a short to ground in the EGR valve 5 V reference circuit and repair as necessary. Is a repair necessary?	-	Go to *Step 15*	Go to *Step 13*
9	Check for an open in the EGR 5 V reference circuit and repair as necessary. Is a repair necessary?	-	Go to *Step 15*	Go to *Step 14*
10	Replace the EGR valve. Is the action complete?	-	Go to *Step 15*	-
11	Check for a short to ground in the EGR valve signal circuit and repair as necessary. Is a repair necessary?	-	Go to *Step 15*	Go to *Step 13*
12	Check for an open in the EGR valve signal circuit and repair as necessary. Is a repair necessary?	-	Go to *Step 15*	Go to *Step 14*
13	Replace the engine control module (ECM). Is the action complete?	-	Go to *Step 19*	-
14	Check the affected circuit for a poor connection or proper terminal tension at the ECM and repair as necessary. Is a repair necessary?	-	Go to *Step 15*	Go to *Step 13*
15	1. Using the scan tool, clear the Diagnostic Trouble Codes (DTCs). 2. Start the engine and idle at normal operating temperature. 3. Operate the vehicle within the conditions for setting this DTC as specified in the supporting text. Does the scan tool indicate that this diagnostic ran and passed?	-	Go to *Step 7*	Go to *Step 2*
16	Check if any additional DTCs are set. Are any DTCs displayed that have not been diagnosed?	-	Go to applicable DTC table	System OK

BLANK

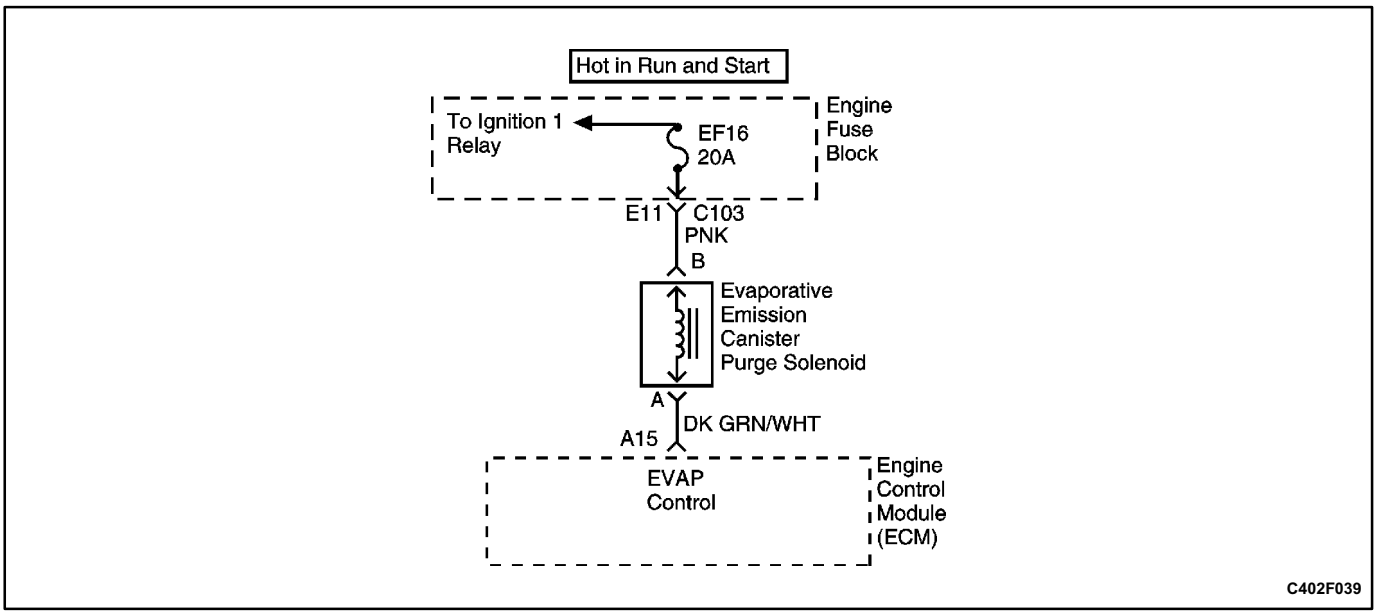

DIAGNOSTIC TROUBLE CODE (DTC) P0443
EVAPORATIVE EMISSION SYSTEM PURGE CONTROL CIRCUIT

System Description

The evaporative emission (EVAP) system includes the following components:

- Fuel tank.
- EVAP vent solenoid.
- Fuel tank pressure sensor.
- Fuel pipes and hoses.
- Fuel vapor lines.
- Fuel cap.
- EVAP canister.
- Purge lines.
- EVAP canister purge valve.
- EVAP service port.

The EVAP system is checked by applying vacuum to the EVAP system and monitoring for a vacuum decay. The engine control module (ECM) monitors the vacuum level through the fuel tank pressure sensor signal.

At the appropriate time, the EVAP canister purge valve and the EVAP vent solenoid are turned ON, allowing the engine to draw a small vacuum on the entire evaporative emission system. After the desired vacuum level has been achieved, the EVAP canister purge valve is turned OFF, sealing the system.

Conditions for Setting the DTC

- Ignition ON.
- Ignition voltage is greater than 10 v.
- Engine run time is greater than 5 sec.
- The ECM detects that the commanded state of the driver and the actual state of the control circuit do not match.

Action Taken When the DTC Sets

- The Malfunction Indicator Lamp (MIL) will illuminate on the second consecutive drive trip that the diagnostic runs and fails.
- The ECM will record operating conditions at the time the diagnostic fails. This information will be stored in the Freeze Frame and Failure Records buffers.
- A history DTC is stored.

Conditions for Clearing the MIL/DTC

- The MIL will turn off after three consecutive ignition cycles in which the diagnostic runs without a fault.
- A history DTC will clear after 40 consecutive warm-up cycles without a fault.
- DTC(s) can be cleared by disconnecting the battery.
- Using a scan tool.

Diagnostic Aids

Using Freeze Frame and/or Failure Records data may aid in locating an intermittent condition. If the DTC cannot be duplicated, the information included in the Freeze Frame and/or Failure Records data can be useful in determining how many miles since the DTC set. The Fail Counter and the Pass Counter can also be used to determine how many ignition cycles the diagnostic reported a pass and/or a fail. Operate the vehicle within the same freeze frame conditions (rpm, load, vehicle speed, temperature, etc.) that were noted. This will isolate when the DTC failed.

Test Description

Number(s) below refer to the step number(s) on the Diagnostic Table.

1. The OnBoard Diagnostic (OBD) System Check prompts the technician to complete some basic checks and store the freeze frame and failure records data on the scan tool if applicable. This creates an electronic copy of the data taken when the malfunction occurred. The information is then stored on the scan tool for later reference.
2. Listen for an audible click when the solenoid operates. Be sure that both the ON and the OFF states are commanded. Repeat the commands as necessary.
3. This check can detect a partially shorted coil which would cause excessive current flow. Leaving the circuit energized for 2 minutes allows the coil to warm up. When warm, the coil may open (amps drop to 0), or short (amps go above 0.75).
13. If no trouble is found in the control circuit the connection at the ECM, the ECM may be faulty, but this is an extremely unlikely failure. The replacement ECM must be reprogrammed. Refer to the latest Techline procedure for ECM reprogramming.

DTC P0443 Evaporative Emission System Purge Control Circuit

Step	Action	Value(s)	Yes	No
1	Perform an OnBoard Diagnostic (OBD) System Check. Is the system check complete?	-	Go to *Step 2*	Go to "OnBoard Diagnostic System Check"
2	1. Turn the ignition ON, engine OFF. 2. Install the scan tool. 3. Command the Evaporative Emission (EVAP) Purge Solenoid ON and OFF. Does the solenoid turn ON and OFF with each command?	-	Go to *Step 3*	Go to *Step 5*
3	1. Turn the ignition OFF. 2. Disconnect the engine control module (ECM) connector containing the solenoid control circuit (connector 1, red). 3. Turn the ignition ON. 4. Using a digital voltmeter (DVM) on a 10 amp scale, measure the current from the solenoid control circuit, at terminal A15 in the ECM harness connector to ground for 2 minutes. Does the current draw measure less than the specified value?	0.75 amps	Go to "Diagnostic Aids"	Go to *Step 4*
4	1. Turn the ignition OFF. 2. Disconnect the solenoid. 3. Using a DVM, measure resistance from the solenoid control circuit, at terminal A15 in the ECM harness connector to ground. Does the DVM display infinite resistance?	-	Go to *Step 12*	Go to *Step 10*
5	1. Turn the ignition OFF. 2. Disconnect the solenoid. 3. Connect a test light between the terminals A and B in the solenoid harness connector. 4. Turn the ignition ON. 5. Using the scan tool, command the solenoid ON and OFF. Does the test light turn ON and OFF with each command?	-	Go to *Step 8*	Go to *Step 6*

DTC P0443 Evaporative Emission System Purge Control Circuit (Cont'd)

Step	Action	Value(s)	Yes	No
6	With the test light connected to ground, probe the ignition feed circuit, at terminal A in the solenoid harness connector. Does the test light illuminate?	-	Go to *Step 7*	Go to *Step 11*
7	1. Turn the ignition OFF. 2. Reconnect the solenoid. 3. Disconnect the ECM connector containing the solenoid control circuit. 4. Turn the ignition ON. 5. With a fused jumper wire connected to ground, probe the solenoid control circuit at terminal A15 in the ECM harness. Does the solenoid operate?	-	Go to *Step 9*	Go to *Step 10*
8	Check the connections at the solenoid. Is a problem found and corrected?	-	Go to *Step 14*	Go to *Step 12*
9	Check the connections at the ECM. Is a problem found and corrected?	-	Go to *Step 14*	Go to *Step 13*
10	Repair the faulty solenoid control circuit. Is the repair complete?	-	Go to *Step 14*	-
11	Repair the faulty solenoid ignition feed circuit. Is the repair complete?	-	Go to *Step 14*	-
12	Replace the solenoid. Is the repair complete?	-	Go to *Step 14*	-
13	Replace the ECM. Is the repair complete?	-	Go to *Step 14*	-
14	1. Using the scan tool, clear the Diagnostic Trouble Codes (DTCs). 2. Start the engine and idle at normal operating temperature. 3. Operate the vehicle within the conditions for setting this DTC as specified in the supporting text. Does the scan tool indicate that this diagnostic ran and passed?	-	Go to *Step 15*	Go to *Step 2*
15	Check if any additional DTCs are set. Are any DTCs displayed that have not been diagnosed?	-	Go to applicable DTC table	System OK

BLANK

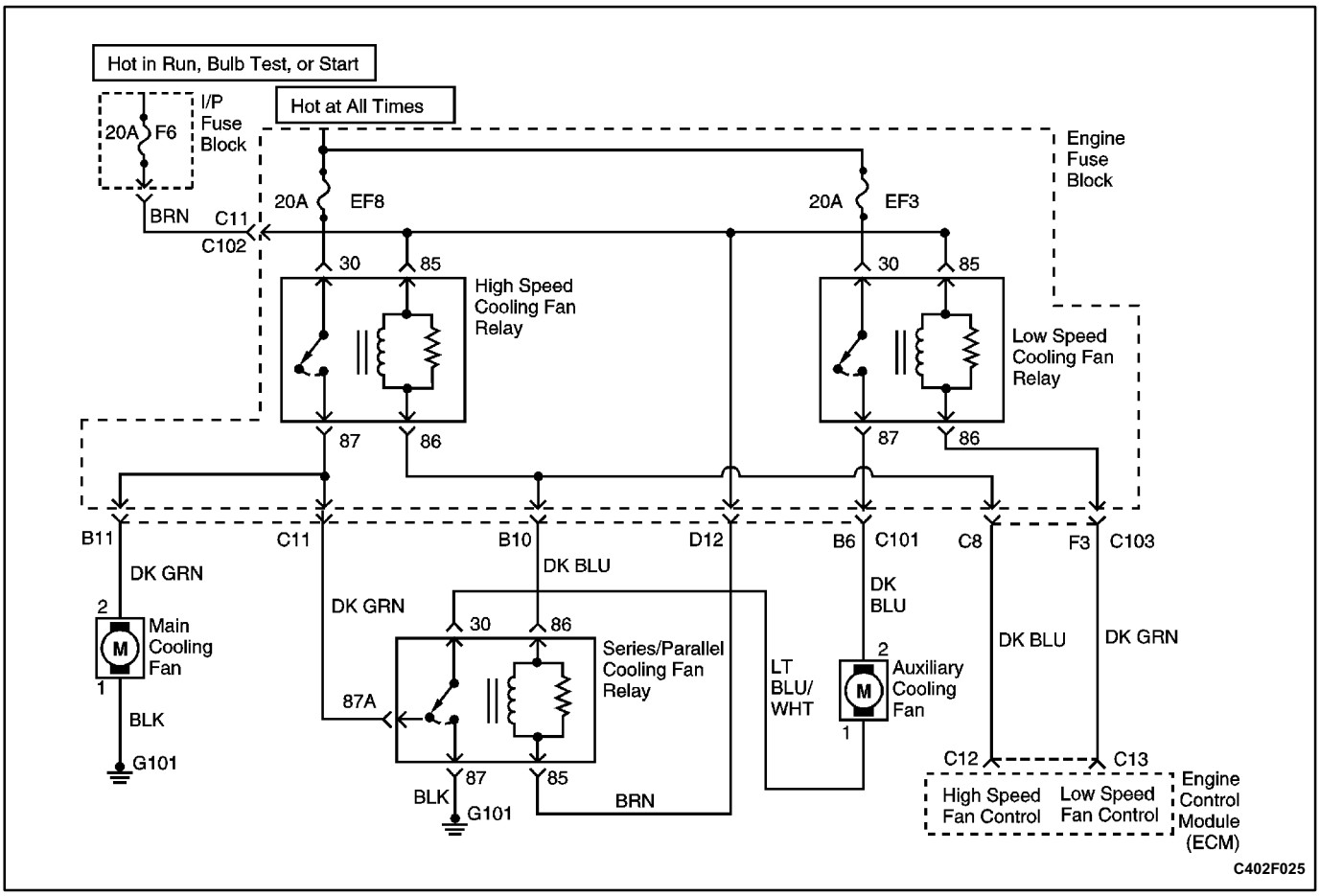

DIAGNOSTIC TROUBLE CODE (DTC) P0480
COOLING FAN RELAY 1 FAN CONTROL CIRCUIT FAULT

Circuit Description

Ignition voltage is supplied directly to the cooling fan relay coil. The engine control module (ECM) controls the relay by grounding the control circuit via an internal switch called a driver. The primary function of the driver is to supply the ground for the component being controlled. Each driver has a fault line which is monitored by the ECM. When the ECM is commanding a component ON, the voltage of the control circuit should be low (near 0 volts). When the ECM is commanding the control circuit to a component OFF, the voltage potential of the circuit should be high (near battery voltage). If the fault detection circuit senses a voltage other than what is expected, the fault line status will change causing the Diagnostic Trouble Code (DTC) to set.

The relay is used to control the high current flow to the cooling fan motors. This allows the ECM driver to only have to handle the relatively low current used by the relay.

Conditions for Setting the DTC

- DTCs P0117, P0118 not set.
- Ignition ON.
- Ignition voltage is greater than 10 volts.
- Engine run time is greater than 5 seconds.

Action Taken When the DTC Sets

- The ECM will not illuminate the Malfunction Indicator Lamp (MIL).
- The ECM will record operating conditions at the time the diagnostic fails. This information will be stored in the Freeze Frame and/or Failure Records.

Conditions for Clearing the MIL/DTC

- A history DTC will clear after forty consecutive warmup cycles, if no failures are reported by this or any other emission related diagnostic.
- ECM battery voltage is interrupted.
- Using a scan tool.

Diagnostic Aids

Using Freeze Frame and/or Failure Records data may aid in locating an intermittent condition. If the DTC cannot be duplicated, the information included in the Freeze Frame and/or Failure Records data can be useful in determining how many miles since the DTC set. The Fail Counter and Pass Counter can also be used to determine how many ignition cycles the diagnostic reported a pass and/or fail. Operate the vehicle within the same freeze frame conditions (rpm, load, vehicle speed, temperature, etc.) that are noted. This will isolate when the DTC failed.

Test Description

The number(s) below refer to step(s) on the diagnostic table.

1. The On-Board Diagnostic (OBD) System Check prompts the technician to complete some basic checks and store the freeze frame and failure records data on the scan tool if applicable. This creates an electronic copy of the data taken when the malfunction occurred. The information is then stored on the scan tool for later reference.
2. Listen for an audible click when the relay operates. Be sure that both the ON and the OFF states are commanded. Repeat the commands as necessary.
3. This check can detect a partially shorted coil which would cause excessive current flow. Leaving the circuit energized for 2 minutes allows the coil to warm up. When warm, the coil may open or short.
5. It is important to identify and test the relay coil terminals to avoid improper diagnosis.
13. If no trouble is found in the control circuit or the connection at the ECM, the ECM may be faulty. However, this is extremely unlikely. The replacement ECM must be reprogrammed. Refer to the latest Techline procedure for ECM reprogramming.

DTC P0480 Cooling Fan Relay 1 Fan Control Circuit Fault

Step	Action	Value(s)	Yes	No
1	Perform an On-Board Diagnostic (OBD) System Check. Is the system check complete?	-	Go to *Step 2*	Go to "On-Board Diagnostic System Check"
2	1. Turn the ignition ON with engine OFF. 2. Install the scan tool. 3. Command the relay ON and OFF. Does the relay turn ON and OFF when commanded?	-	Go to *Step 3*	Go to *Step 5*
3	1. Turn the ignition OFF. 2. Disconnect the engine control module (ECM) connector 2 (white) from the ECM. 3. Turn the ignition ON. 4. Using a digital voltmeter (DVM), measure the current in relay A control circuit, at terminal C13 to ground for 2 minutes. Does the amperage measure less than the specified value?	0.75 amps	Go to "Diagnostic Aids"	Go to *Step 4*
4	1. Turn the ignition OFF. 2. Disconnect the relay. 3. Using a DVM, measure the resistance from the relay control circuit in the ECM harness connector to ground. Does the DVM display infinite resistance?	-	Go to *Step 12*	Go to *Step 10*
5	1. Turn the Ignition OFF. 2. Disconnect the relay. 3. Connect a test light between the relay coil terminals 86 and 85 in the relay harness connector. 4. Turn the ignition ON. 5. Using the scan tool, command the relay ON and OFF. Does the test light turn ON and OFF with each command?	-	Go to *Step 8*	Go to *Step 6*

DTC P0480 Cooling Fan Relay 1 Fan Control Circuit Fault (Cont'd)

Step	Action	Value(s)	Yes	No
6	With the test light connected to ground, probe the ignition feed circuit in the relay harness connector. Does the test light illuminate?	-	Go to *Step 7*	Go to *Step 11*
7	1. Turn the ignition OFF. 2. Reconnect the relay. 3. Disconnect the ECM connector containing the relay control circuit. 4. Turn the ignition ON. 5. With a fused jumper wire connected to ground, probe the relay control circuit at terminal C12 in the ECM harness connector. Does the relay operate?	-	Go to *Step 9*	Go to *Step 10*
8	Check the connections at the relay. Is a problem found and corrected?	-	Go to *Step 14*	Go to *Step 12*
9	Check the connections at the ECM. Is a problem found and corrected?	-	Go to *Step 14*	Go to *Step 13*
10	Repair the faulty relay control circuit. Is the repair complete?	-	Go to *Step 14*	-
11	Repair the faulty relay ignition feed circuit. Is the repair complete?	-	Go to *Step 14*	-
12	Replace the relay. Is the repair complete?	-	Go to *Step 14*	-
13	Replace the ECM. Is the repair complete?	-	Go to *Step 14*	-
14	1. Using the scan tool, clear the Diagnostic Trouble Codes (DTC)s. 2. Start the engine and idle at normal operating temperature. 3. Operate the vehicle within the conditions for setting this DTC as specified in the supporting text. Does the scan tool indicate that this diagnostic ran and passed?	-	Go to *Step 15*	Go to *Step 2*
15	Check if any additional DTCs are set. Are any DTCs displayed that have not been diagnosed?	-	Go to applicable DTC table	System OK

BLANK

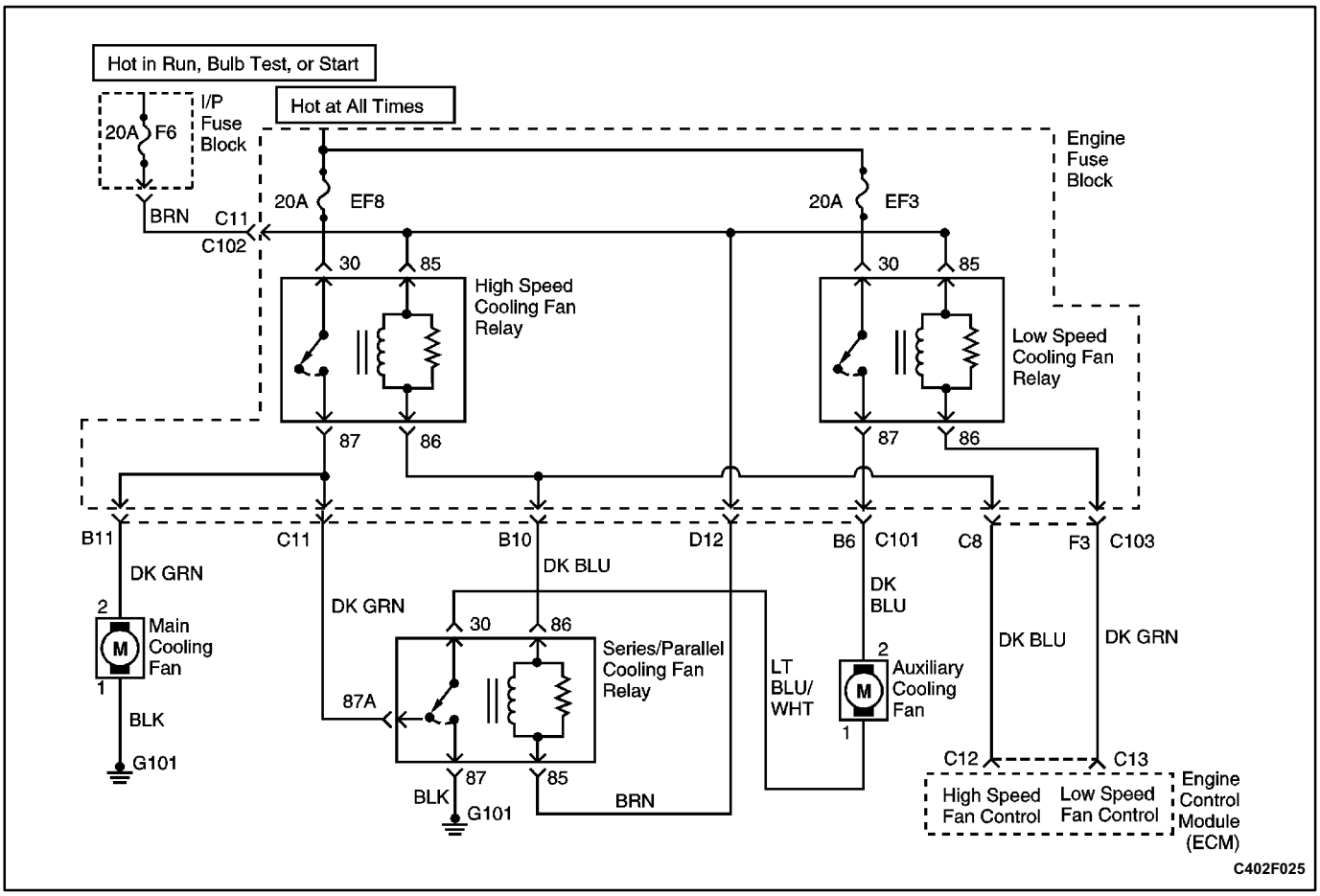

DIAGNOSTIC TROUBLE CODE (DTC) P0481
COOLING FAN RELAY 2 FAN CONTROL CIRCUIT FAULT

Circuit Description

Ignition voltage is supplied directly to the cooling fan relay coil. The engine control module (ECM) controls the relay by grounding the control circuit via an internal switch called a driver. The primary function of the driver is to supply the ground for the component being controlled. Each driver has a fault line which is monitored by the ECM. When the ECM is commanding a component ON, the voltage of the control circuit should be low (near 0 volts). When the ECM is commanding the control circuit to a component OFF, the voltage potential of the circuit should be high (near battery voltage). If the fault detection circuit senses a voltage other than what is expected, the fault line status will change causing the Diagnostic Trouble Code (DTC) to set.

The relay is used to control the high current flow to the cooling fan motors. This allows the ECM driver to only have to handle the relatively low current used by the relay.

Conditions for Setting the DTC

- DTCs P0117, P0118 not set.
- Ignition ON.
- Ignition voltage is greater than 10 volts.
- Engine run time is greater than 5 seconds.

Action Taken When the DTC Sets

- The ECM will not illuminate the Malfunction Indicator Lamp (MIL).
- The ECM will record operating conditions at the time the diagnostic fails. This information will be stored in the Freeze Frame and/or Failure Records.

Conditions for Clearing the MIL/DTC

- A history DTC will clear after forty consecutive warmup cycles, if no failures are reported by this or any other emission related diagnostic.
- ECM battery voltage is interrupted.
- Using a scan tool.

Diagnostic Aids

Using Freeze Frame and/or Failure Records data may aid in locating an intermittent condition. If the DTC cannot be duplicated, the information included in the Freeze Frame and/or Failure Records data can be useful in determining how many miles since the DTC set. The Fail Counter and Pass Counter can also be used to determine how many ignition cycles the diagnostic reported a pass and/or fail. Operate the vehicle within the same freeze frame conditions (rpm, load, vehicle speed, temperature, etc.) that are noted. This will isolate when the DTC failed.

Test Description

The number(s) below refer to step(s) on the diagnostic table.

1. The On-Board Diagnostic (OBD) System Check prompts the technician to complete some basic checks and store the freeze frame and failure records data on the scan tool if applicable. This creates an electronic copy of the data taken when the malfunction occurred. The information is then stored on the scan tool for later reference.
2. Listen for an audible click when the relay operates. Be sure that both the ON and the OFF states are commanded. Repeat the commands as necessary.
3. This check can detect a partially shorted coil which would cause excessive current flow. Leaving the circuit energized for 2 minutes allows the coil to warm up. When warm, the coil may open or short.
5. It is important to identify and test the relay coil terminals to avoid improper diagnosis.
13. If no trouble is found in the control circuit or the connection at the ECM, the ECM may be faulty. However, this is extremely unlikely. The replacement ECM must be reprogrammed. Refer to the latest Techline procedure for ECM reprogramming.

DTC P0481 Cooling Fan Relay 2 Fan Control Circuit Fault

Step	Action	Value(s)	Yes	No
1	Perform an On-Board Diagnostic (OBD) System Check. Is the system check complete?	-	Go to *Step 2*	Go to "On-Board Diagnostic System Check"
2	1. Turn the ignition ON with engine OFF. 2. Install the scan tool. 3. Command the relay ON and OFF. Does the relay turn ON and OFF when commanded?	-	Go to *Step 3*	Go to *Step 5*
3	1. Turn the ignition OFF. 2. Disconnect the engine control module (ECM) connector 2 (white) from the ECM. 3. Turn the ignition ON. 4. Using a digital voltmeter (DVM), measure the current in relay B control circuit, at terminal C12 to ground for 2 minutes. Does the amperage measure less than the specified value?	0.75 amps	Go to "Diagnostic Aids"	Go to *Step 4*
4	1. Turn the ignition OFF. 2. Disconnect the relay. 3. Using a DVM, measure the resistance from the relay control circuit in the ECM harness connector to ground. Does the DVM display infinite resistance?	-	Go to *Step 12*	Go to *Step 10*

DTC P0481 Cooling Fan Relay 2 Fan Control Circuit Fault (Cont'd)

Step	Action	Value(s)	Yes	No
5	1. Turn the Ignition OFF. 2. Disconnect the relay. 3. Connect a test light between the relay coil terminals 86 and 85 in the relay harness connector. 4. Turn the ignition ON. 5. Using the scan tool, command the relay ON and OFF. Does the test light turn ON and OFF with each command?	-	Go to *Step 8*	Go to *Step 6*
6	With the test light connected to ground, probe the ignition feed circuit, at terminal 86 in the relay harness connector. Does the test light illuminate?	-	Go to *Step 7*	Go to *Step 11*
7	1. Turn the ignition OFF. 2. Reconnect the relay. 3. Disconnect the ECM connector containing the relay control circuit. 4. Turn the ignition ON. 5. With a fused jumper wire connected to ground, probe the relay control circuit, at terminal C12 in the ECM harness connector. Does the relay operate?	-	Go to *Step 9*	Go to *Step 10*
8	Check the connections at the relay. Is a problem found and corrected?	-	Go to *Step 14*	Go to *Step 12*
9	Check the connections at the ECM. is a problem found and corrected?	-	Go to *Step 14*	Go to *Step 13*
10	Repair the faulty relay control circuit. Is the repair complete?	-	Go to *Step 14*	-
11	Repair the faulty relay ignition feed circuit. Is the repair complete?	-	Go to *Step 14*	-
12	Replace the relay. Is the repair complete?	-	Go to *Step 14*	-
13	Replace the ECM. Is the repair complete?	-	Go to *Step 14*	-
14	1. Using the scan tool, clear the Diagnostic Trouble Codes (DTCs). 2. Start the engine and idle at normal operating temperature. 3. Operate the vehicle within the conditions for setting this DTC as specified in the supporting text. Does the scan tool indicate that this diagnostic ran and passed?	-	Go to *Step 15*	Go to *Step 2*
15	Check if any additional DTCs are set. Are any DTCs displayed that have not been diagnosed?	-	Go to applicable DTC table	System OK

BLANK

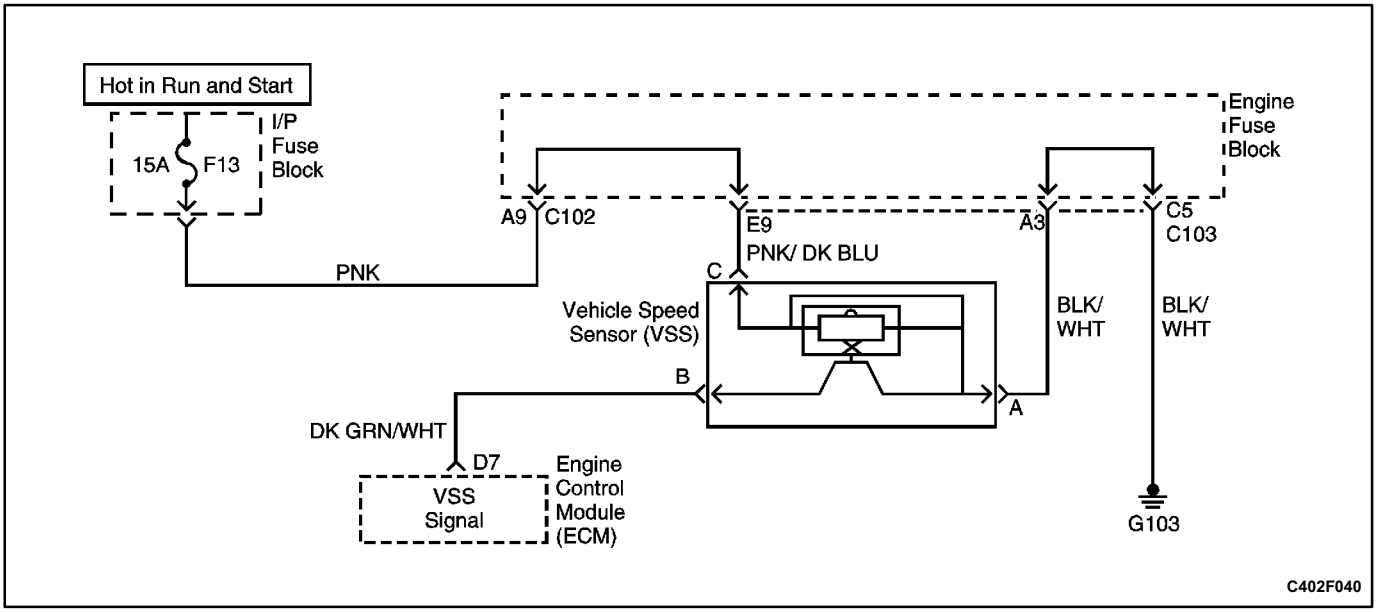

DIAGNOSTIC TROUBLE CODE (DTC) P0502
VEHICLE SPEED (ENGINE SIDE) NO SIGNAL

Circuit Description

Vehicle speed information is provided to the engine control module (ECM) by the Vehicle Speed Sensor (VSS). The VSS is a permanent magnet generator that is mounted in the transaxle and produces a pulsing voltage whenever vehicle speed is over 3 mph (5 km/h). The alternating current (AC) voltage level and the number of pulses increases with vehicle speed. The ECM converts the pulsing voltage into mph (km/h) and than supplies the necessary signal to the instrument panel for speedometer/ odometer operation and to the cruise control module and multifunction alarm module operation. This Diagnostic Trouble Code (DTC) will detect if vehicle speed is reasonable according to engine rpm and load.

Conditions for Setting the DTC

- DTC(s) P0107, P0108, P0121, P0122, P0123, P1106, P1107, P1121 and P1122 will not set.
- Voltage is between 11-16 volts.
- Coolant temperature is greater than 40°C (40°F).

Power Test

- Vehicle speed is less than 8 km/h (5 mph).
- Manifold Absolute Pressure (MAP) is greater than 60 kPa.
- Throttle Position Sensor (TPS) is between 25 and 60%.
- The rpm is between 2700 and 6000.

Deceleration Test

- Vehicle speed is less than 8 km/h (5 mph).
- MAP is less than 25 kPa.
- TPS is less than 1.0%.
- The rpm is between 1200 and 6000.
- The change of RPM is less than 90 RPM/cycle.
- P/N switch is off.

Action Taken When the DTC Sets

- The Malfunction Indicator Lamp (MIL) will illuminate.
- The ECM will record operating conditions at the time the diagnostic fails. This information will be stored in the Freeze Frame and Failure Records buffers.
- A history DTC is stored.
- Coolant fan turns on.

Conditions for Clearing the MIL/DTC

- The MIL will turn off after three consecutive ignition cycles in which the diagnostic runs without a fault.
- A history DTC will clear after 40 consecutive warmup cycles without a fault.
- DTC(s) can be cleared by using the scan tool.

Diagnostic Aids

An intermittent problem may be caused by a poor connection, rubbedthrough wire insulation, or a wire that is broken inside the insulation.

VSS signal circuit should be thoroughly checked for the following conditions:

- Backed out terminals
- Improper mating
- Broken locks
- Improperly formed
- Damaged terminals
- Poor terminal-to-wire connection
- Physical damage to the wiring harness

Ensure the VSS is correctly torqued to the transmission housing.

Refer to "Intermittents" in this section.

Test Description

Number(s) below refer to the step number(s) on the Diagnostic Table.

1. The On-Board Diagnostic (OBD) System Check prompts the technician to complete some basic checks and store the freeze frame and failure records data on the scan tool if applicable. This creates an electronic copy of the data taken when the malfunction occurred. The information is then stored on the scan tool for later reference.
2. The permanent magnet generator only produces a signal if the drive wheels are turning greater than 3 mph (5 km/h). This step determines if DTC P0502 is the result of a hard failure or an intermittent condition.
3. Proper engine loads cannot be achieved in a shop environment to properly run the vehicle within the Freeze Frame Data conditions. It will be necessary to drive the vehicle on the road to obtain the proper engine loads.
4. This step verifies that the ECM is receiving a signal from the vehicle speed sensor.
5. Refer to service bulletin information for the latest calibration update.
6. Refer to the latest Techline information for programming procedures.
8. A resistance reading that is higher than the specified value indicates that the VSS circuitry is open.
10. If the displayed resistance is less than the 1300 ohms, the VSS high and low circuits are shorted together.
11. This checks the resistance of the VSS if no opens or shorts were found on the VSS high and low circuits.
13. The replacement ECM must be reprogrammed. Refer to the latest Techline procedure for ECM reprogramming.

DTC P0502 Vehicle Speed (Engine Side) No Signal

Step	Action	Value(s)	Yes	No
1	Perform an On-Board Diagnostic (OBD) System Check. Is the system check complete?	-	Go to *Step 2*	Go to "On-Board Diagnostic System Check"
2	**Notice:** Running the vehicle in gear with the wheels hanging down at full travel will damage the drive axles. 1. Turn the ignition switch ON with the engine OFF. 2. Install a scan tool. 3. Raise the drive wheels. 4. Support the lower control arms so that the drive axles are in a horizontal (straight) position. 5. Allow the engine to idle in gear. Does the scan tool display vehicle speed above the specified value?	0 mph	Go to *Step 3*	Go to *Step 4*
3	1. Turn the ignition switch ON, with the engine OFF. 2. Review the Freeze Frame data and note the parameters. 3. Operate the vehicle within the Freeze Frame conditions and Conditions for Setting this DTC. Does the scan tool display the vehicle speed above the specified value?	0 mph	Go to *Step 12*	Go to *Step 4*
4	1. Turn the ignition switch OFF. 2. Disconnect the engine control module (ECM) connector 2 (white). 3. Using a digital voltmeter (DVM) connected to ground, measure the voltage in the Vehicle Speed Sensor (VSS) signal circuit, at terminal D7 while rotating the wheels. Is the voltage greater than or equal to the specified value?	0.5 V	Go to *Step 12*	Go to *Step 5*

DTC P0502 Vehicle Speed (Engine Side) No Signal (Cont'd)

Step	Action	Value(s)	Yes	No
5	Measure the resistance in the VSS signal circuit while rotating the wheels. Is the resistance greater than the specified value?	1950 Ω	Go to *Step 6*	Go to *Step 7*
6	Check the VSS signal circuit for an open and repair as necessary. Is a repair necessary?	-	Go to *Step 12*	Go to *Step 9*
7	Is the resistance value within or equal to the specified value?	1300-1950 Ω	Go to *Step 8*	Go to *Step 9*
8	Check the VSS signal circuit for a short to ground or for being shorted together and repair as necessary. Is a repair necessary?	-	Go to *Step 12*	Go to *Step 9*
9	1. Remove the VSS. 2. Measure the resistance between terminals A and B. Is the resistance value within the specified value?	1300-1950 Ω	Go to *Step 11*	Go to *Step 10*
10	Replace the VSS. Is the action complete?	-	Go to *Step 12*	-
11	Replace the ECM. Is the action complete?	-	Go to *Step 12*	-
12	1. Using the scan tool, clear the Diagnostic Trouble Codes (DTCs). 2. Start the engine and idle at normal operating temperature. 3. Operate the vehicle within the conditions for setting this DTC as specified in the supporting text. Does the scan tool indicate that this diagnostic has run and passed.?	-	Go to *Step 13*	Go to *Step 2*
13	Check if any additional DTCs are set. Are any DTCs displayed that have not been diagnosed?	-	Go to applicable DTC table	System OK

BLANK

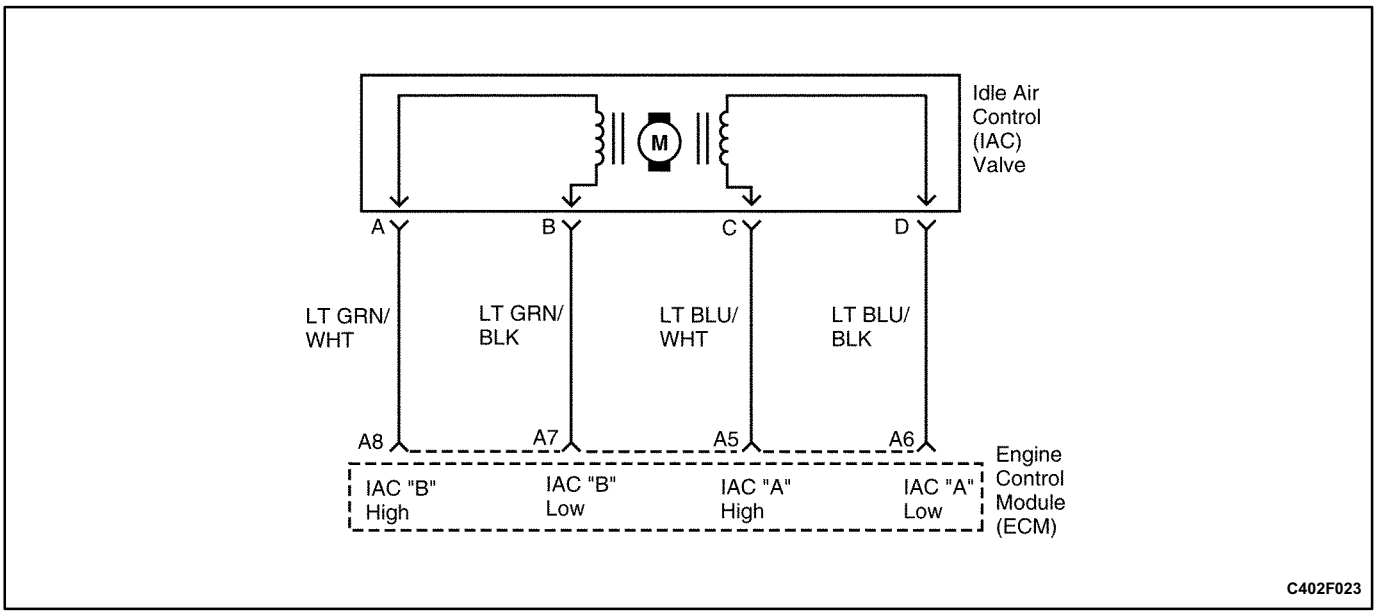

DIAGNOSTIC TROUBLE CODE (DTC) P0506
IDLE SPEED RPM LOWER THAN DESIRED IDLE SPEED

Circuit Description

The engine control module (ECM) controls the air entering into the engine with an Idle Air Control (IAC) Valve. To increase the idle rpm, the ECM commands the pintle inside the IAC valve away from the throttle body seat. This allows more air to bypass through the throttle blade. To decrease the rpm the ECM commands the pintle towards the throttle body seat. This reduces the amount of air bypassing the throttle blade. A scan tool will read the IAC valve pintle position in counts. The higher the counts, the more air that is allowed to bypass the throttle blade. This Diagnostic Trouble Code (DTC) determines if a low idle condition exists as defined as 100 rpm below the desired idle rpm.

Conditions for Setting the DTC

- DTC(s) P0106, P0107, P0108, P0112, P0113, P0117, P0118, P0121, P0122, P0123, P0125, P0131, P0132, P0133, P0134, P0135, P0137, P0138, P0140, P0141, P0171, P0172, P0201, P0202, P0203, P0204, P0300, P0336, P0337, P0341, P0342, P0351, P0352, P0402, P0404, P0405, P0406, P0502, P1130, P1133, P1134, P1404, P1441, P1627 not set.
- Engine Coolant Temperature (CTS) is greater than 59.75°C (140°F).
- Barometric Pressure (BARO) is greater than 72.67 kPa.
- Ignition voltage is between 9.5 and 16.7 volts.
- Engine has been running more than 125 seconds.
- The Intake Air Temperature is greater than 40°C (40°F).
- All of the above must be met for greater than 5 seconds.

Action Taken When the DTC Sets

- The Malfunction Indicator Lamp (MIL) will illuminate.
- The ECM will record operating conditions at the time the diagnostic fails. This information will be stored in the Freeze Frame and Failure Records buffers.
- A history DTC is stored.
- Coolant fan turns on.

Conditions for Clearing the MIL/DTC

- The MIL will turn off after three consecutive ignition cycles in which the diagnostic runs without a fault.
- A history DTC will clear after 40 consecutive warm-up cycles without a fault.
- DTC(s) can be cleared by using the scan tool.

Diagnostic Aids

Inspect the IAC valve electrical connection for proper mating.

Inspect the wiring harness for damage.

Inspect the throttle stop screw for signs of tampering.

Inspect the throttle linkage for signs of binding or excessive wear.

A slow or unstable idle may be caused by one of the following conditions:

- Fuel system too rich or too lean.
- Foreign material in the throttle body bore or in the air induction system.
- A leaking or restricted intake manifold.
- Excessive engine overloading. Check for seized pulleys, pumps, or motors on the accessory drive,
- Overweight engine oil.

Test Description

Number(s) below refer to the step number(s) on the Diagnostic Table.

1. The On-Board Diagnostic (OBD) System Check prompts the technician to complete some basic

checks and store the freeze frame and failure records data on the scan tool if applicable. This creates an electronic copy of the data taken when the malfunction occurred. The information is then stored on the scan tool for later reference.

2. A normal operating IAC system will be able to be extended and retracted by a scan tool and change the engine idle rpm. Valve movement is verified by an engine rpm change.
3. If the scan tool was able to command the IAC valve smoothly, a malfunction may still exist internally within the IAC valve. This can be checked by checking the IAC valves internal resistance.
5. The IAC circuits always have ground or voltage signals on them in pairs. If the test light illuminates on more or less than 2 terminals, 1 of the circuits is shorted to voltage or open.
6. The IAC circuits always have ground or voltage signals on them in pairs. If the test light illuminates on more or less than 2 terminals, 1 of the circuits is shorted to ground or open,
8. The IAC circuits are constantly switched between ground and voltage so the test light should blink on all circuits when connected to ground.
10. Any circuitry, that is suspected as causing the intermittent complaint, should be thoroughly checked for backed-out terminals, improper mating, broken locks, improperly formed or damaged terminals, poor terminal to wiring connections or physical damage to the wiring harness.
12. A test light that remains ON constantly indicates that the circuit is shorted to voltage.
14. The replacement ECM must be reprogrammed. Refer to the latest Techline procedure for ECM reprogramming.
16. If no malfunctions have been found at this point and no additional DTCs were set, refer to "Diagnostic Aids" in this section for additional checks and information.

DTC P0506 Idle Speed RPM Lower Than Desired Idle Speed

Step	Action	Value(s)	Yes	No
1	Perform an On-Board Diagnostic (OBD) System Check. Is the system check complete?	-	Go to *Step 2*	Go to "On-Board Diagnostic System Check"
2	1. Turn the ignition switch ON with the engine OFF. 2. Engine at normal operating temperature. 3. Transmission in park or neutral and the parking brake set. 4. A/C is Off. 5. Install a scan tool and command the Idle Air Control (IAC) valve up and down between the specified values. Does the engine rpm change smoothly when commanded by the scan tool?	900-2000 rpm	Go to *Step 3*	Go to *Step 5*
3	1. Turn the ignition switch OFF. 2. Disconnect the IAC valve electrical connector. 3. Measure the resistance across the IAC valve terminals A and B. 4. Measure the resistance across the IAC terminals C and D. Is the resistance across terminals A and B and terminals C and D within the specified value?	40-80 Ω	Go to *Step 4*	Go to *Step 13*
4	1. Measure the resistance across the IAC valve terminals B and C. 2. Measure the resistance across the IAC terminals A and D. Is the resistance across terminals B and C and terminals A and D infinite?	-	Go to *Step 15*	Go to *Step 13*

DTC P0506 Idle Speed RPM Lower Than Desired Idle Speed (Cont'd)

Step	Action	Value(s)	Yes	No
5	1. Turn the Ignition switch ON with the engine OFF. 2. Disconnect the IAC valve electrical connector. 3. With a test light connected to ground, probe the IAC electrical connector terminals. Does the test light illuminate on 2 terminals.	-	Go to *Step 6*	Go to *Step 7*
6	With a test light connected to B+, probe the IAC electrical connector terminals. Does the test light illuminate on 2 terminals?	-	Go to *Step 8*	Go to *Step 9*
7	Check for an open or short to ground in the IAC valve high and low circuits and repair as necessary. Is a repair necessary?	-	Go to *Step 15*	Go to *Step 10*
8	1. Idle the engine. 2. Connect a test light to ground, probe the IAC electrical connector terminals. Does the test light flash ON and OFF for all terminals?	-	Go to *Step 11*	Go to *Step 12*
9	Check for an open or a short to voltage in the IAC valve high and low circuits and repair as necessary. Is a repair necessary?	-	Go to *Step 15*	Go to *Step 10*
10	Check the engine control module (ECM) electrical connector for poor connections and repair as necessary. Is a repair necessary?	-	Go to *Step 15*	Go to *Step 14*
11	Inspect the IAC valve passages. Is a problem found?	-	Go to *Step 15*	Go to *Step 13*
12	Check the test light. Does the test light remain ON constantly for the terminals that did not blink?	-	Go to *Step 9*	Go to *Step 7*
13	Replace the IAC valve. Is the action complete?	-	Go to *Step 15*	-
14	Replace the ECM. Is the action complete?	-	Go to *Step 15*	-
15	1. Using the scan tool, clear the Diagnostic Trouble Codes (DTCs). 2. Start the engine and idle at normal operating temperature. 3. Operate the vehicle within the conditions for setting this DTC as specified in the supporting text. Does the scan tool indicate that this diagnostic has run and passed?	-	Go to *Step 16*	Go to *Step 2*
16	Check if any additional DTCs are set. Are any DTCs displayed that have not been diagnosed?	-	Go to applicable DTC Table	System OK

BLANK

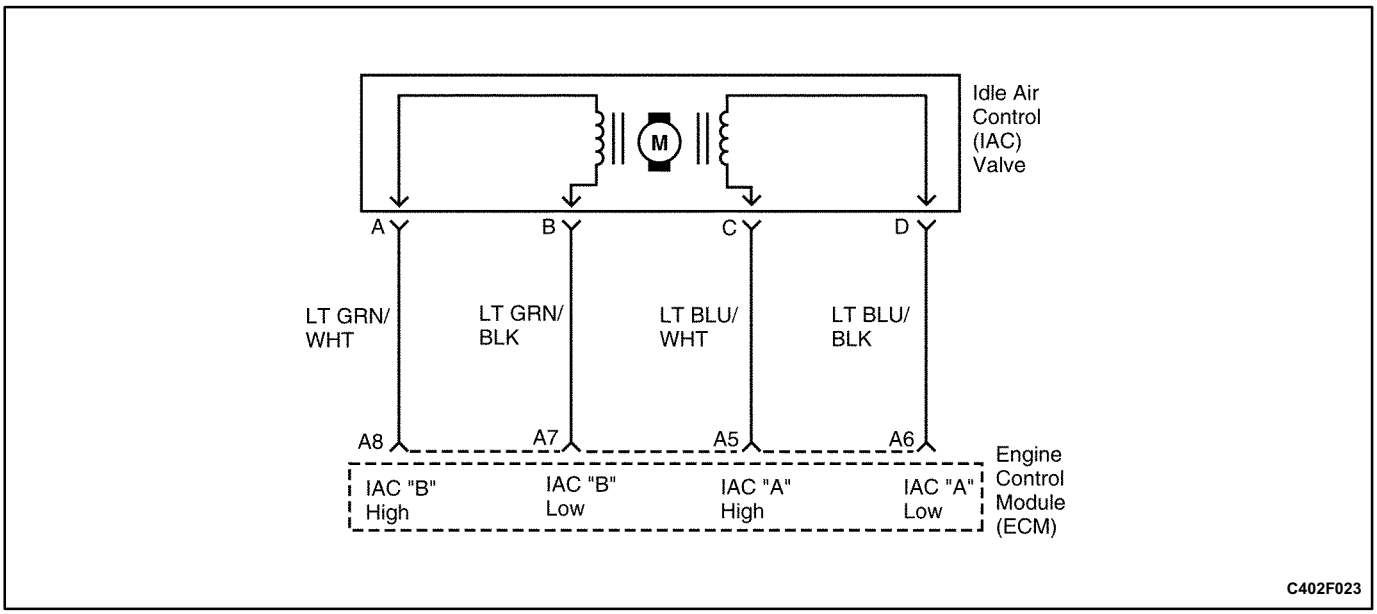

DIAGNOSTIC TROUBLE CODE (DTC) P0507
IDLE SPEED RPM HIGHER THAN DESIRED IDLE SPEED

Circuit Description

The engine control module (ECM) controls the air entering into the engine with an Idle Air Control (IAC) Valve. To increase the idle rpm, the ECM commands the pintle inside the IAC valve away from the throttle body seat. This allows more air to bypass through the throttle blade. To decrease the rpm the ECM commands the pintle towards the throttle body seat. This reduces the amount of air bypassing the throttle blade. A scan tool will read the IAC valve pintle position in counts. The higher the counts, the more air that is allowed to bypass the throttle blade. This Diagnostic Trouble Code (DTC) determines if a high idle condition exists as defined as 200 rpm above the desired idle rpm.

Conditions for Setting the DTC

- DTC(s) P0106, P0107, P0108, P0112, P0113, P0117, P0118, P0121, P0122, P0123, P0131, P0132, P0133, P0134, P0135, P0137, P0138, P0140, P0141, P0171, P0172, P0201, P0202, P0203, P0204, P0300, P0336, P0337, P0341, P0342, P0351, P0352, P0402, P0404, P0405, P0406, P0443, P0502, P1130, P1133, P1134, P1171, P1404, P1441, P1627 not set.
- Engine Coolant Temperature (CTS) is greater than 59.75°C (140°F).
- Barometric Pressure (BARO) is greater than 72.67 kPa.
- Ignition voltage is between 9.5 and 16.7 volts.
- Engine has been running more than 125 seconds.
- The Idle Air Temperature is greater than 40°C (40°F).
- All of the above must be met for greater than 5 seconds.

Action Taken When the DTC Sets

- The Malfunction Indicator Lamp (MIL) will illuminate.
- The ECM will record operating conditions at the time the diagnostic fails. This information will be stored in the Freeze Frame and Failure Records buffers.
- A history DTC is stored.
- Coolant fan turns on.

Conditions for Clearing the MIL/DTC

- The MIL will turn off after three consecutive ignition cycles in which the diagnostic runs without a fault.
- A history DTC will clear after 40 consecutive warmup cycles without a fault.
- DTC(s) can be cleared by using the scan tool.

Diagnostic Aids

Inspect the IAC valve electrical connection for proper mating.

Inspect the wiring harness for damage.

Inspect throttle stop screw for signs of tampering.

Inspect throttle linkage for signs of binding or excessive wear.

Test Description

Number(s) below refer to the step number(s) on the Diagnostic Table.

1. The On-Board Diagnostic (OBD) System Check prompts the technician to complete some basic checks and store the freeze frame and failure records data on the scan tool if applicable. This creates an electronic copy of the data taken when the malfunction occurred. The information is then stored on the scan tool for later reference.
2. A normally operating IAC system will be able to be extended and retracted by a scan tool and change the engine idle rpm. Valve movement is verified by an engine rpm change.

3. If the scan tool was able to command the IAC valve smoothly, a malfunction may still exist internally within the IAC valve. This can be checked by checking the IAC valves internal resistance.
5. The IAC circuits always have ground or voltage signals on them in pairs. If the test light illuminates on more or less than 2 terminals, 1 of the circuits is shorted to voltage or open.
6. The IAC circuits always have ground or voltage signals on them in pairs. If the test light illuminates on more or less than 2 terminals, 1 of the circuits is shorted to ground or open
8. The IAC circuits are constantly switched between ground and voltage so the test light should blink on all circuits when connected to ground.
10. Any circuitry, that is suspected as causing the intermittent complaint, should be thoroughly checked for backed-out terminals, improper mating, broken locks, improperly formed or damaged terminals, poor terminal to wiring connections or physical damage to the wiring harness.
12. A test light that remains ON constantly indicates that the circuit is shorted to voltage.
14. The replacement ECM must be reprogrammed. Refer to the latest Techline procedure for ECM reprogramming.
16. If no malfunctions have been found at this point and no additional DTCs were set, refer to "Diagnostic Aids" in this section for additional checks and information.

DTC P0507 Idle Speed RPM Higher Than Desired Idle Speed

Step	Action	Value(s)	Yes	No
1	Perform an On-Board Diagnostic (OBD) System Check. Is the system check complete?	-	Go to *Step 2*	Go to "On-Board Diagnostic System Check"
2	1. Turn the ignition switch ON, with the engine OFF. 2. Engine at normal operating temperature. 3. Transmission in park or neutral and the parking brake set. 4. A/C is Off. 5. Install a scan tool and command the Idle air control (IAC) valve up and down between the specified values. Does the engine rpm change smoothly when commanded by the scan tool?	900-2000 rpm	Go to *Step 3*	Go to *Step 5*
3	1. Turn the ignition switch OFF. 2. Disconnect the IAC valve electrical connector. 3. Measure the resistance across the IAC valve terminals A and B. 4. Measure the resistance across the IAC terminals C and D. Are the resistance across terminals A and B and terminals C and D within the specified value?	40-80 Ω	Go to *Step 4*	Go to *Step 13*
4	1. Measure the resistance across the IAC valve terminals B and C. 2. Measure the resistance across the IAC terminals A and D. Is the resistance across terminals B and C and terminals A and D infinite?	-	Go to *Step 15*	Go to *Step 13*

DTC P0507 Idle Speed RPM Higher Than Desired Idle Speed (Cont'd)

Step	Action	Value(s)	Yes	No
5	1. Turn the Ignition switch ON with the engine OFF. 2. Disconnect the IAC valve electrical connector. 3. With a test light connected to ground, probe the IAC electrical connector terminals. Does the test light illuminate on 2 terminals.	-	Go to *Step 6*	Go to *Step 7*
6	With a test light connected to B+, probe the IAC electrical connector terminals. Does the test light illuminate on 2 terminals?	-	Go to *Step 8*	Go to *Step 9*
7	Check for an open or short to ground in the IAC valve high and low circuits and repair as necessary. Is a repair necessary?	-	Go to *Step 15*	Go to *Step 10*
8	1. Idle the engine. 2. Connect a test light to ground, probe the IAC electrical connector terminals. Does the test light flash ON and OFF for all terminals?	-	Go to *Step 11*	Go to *Step 12*
9	Check for an open or a short to voltage in the IAC valve high and low circuits and repair as necessary. Is a repair necessary?	-	Go to *Step 15*	Go to *Step 10*
10	Check the engine control module (ECM) electrical connector for poor connections and repair as necessary. Is a repair necessary?	-	Go to *Step 15*	Go to *Step 14*
11	Inspect the IAC valve passages. Is a problem found?	-	Go to *Step 15*	Go to *Step 13*
12	Check the test light. Does the test light remain ON constantly for the terminals that did not blink?	-	Go to *Step 9*	Go to *Step 7*
13	Replace the IAC valve. Is the action complete?	-	Go to *Step 15*	-
14	Replace the ECM. Is the action complete?	-	Go to *Step 15*	-
15	1. Using the scan tool, clear the Diagnostic Trouble Codes (DTCs). 2. Start the engine and idle at normal operating temperature. 3. Operate the vehicle within the conditions for setting this DTC as specified in the supporting text. Does the scan tool indicate that this diagnostic has run and passed?	-	Go to *Step 16*	Go to *Step 2*
16	Check if any additional DTCs are set. Are any DTCs displayed that have not been diagnosed?	-	Go to applicable DTC Table	System OK

BLANK

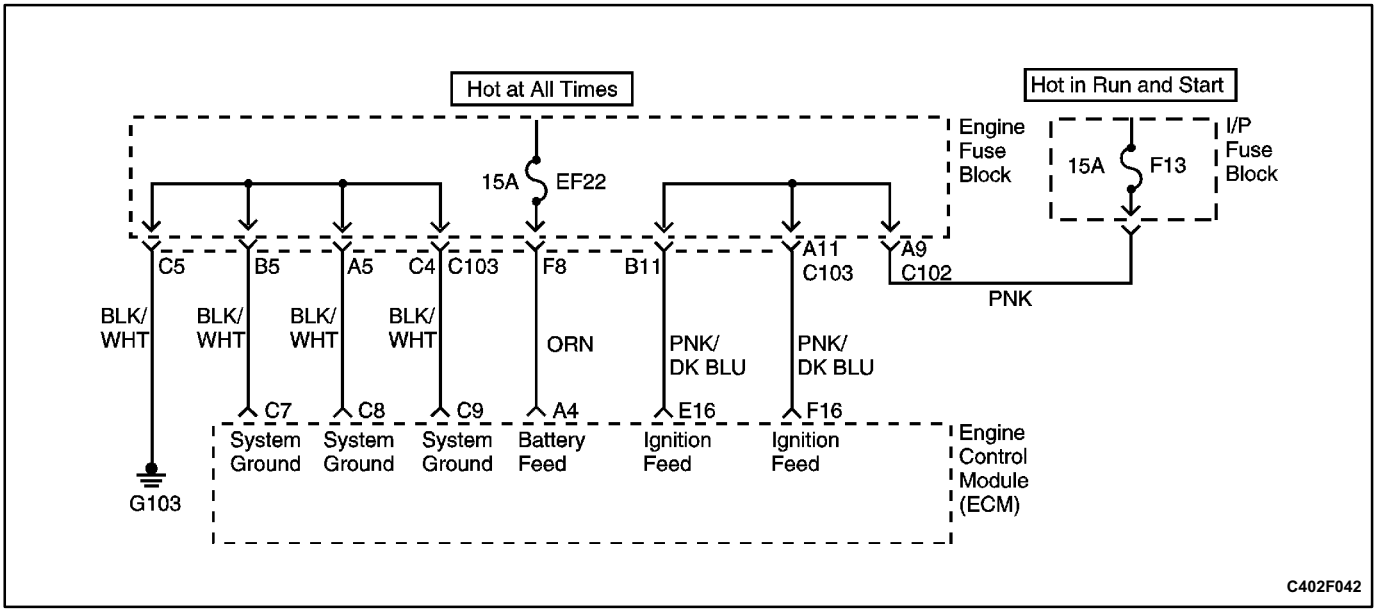

DIAGNOSTIC TROUBLE CODE (DTC) P0562 SYSTEM VOLTAGE (ENGINE SIDE) TOO LOW

Circuit Description

The engine control module (ECM) monitors the ignition voltage on the ignition feed circuit to terminal F16 at the ECM. A system voltage Diagnostic Trouble Code (DTC) will set whenever the voltage is below a calibrated value.

Conditions for Setting the DTC

- Ignition ON.
- The system voltage is less than 11 volts.

Action Taken When the DTC Sets

- The Malfunction Indicator Lamp (MIL) will not illuminate.
- The ECM will record operating conditions at the time the diagnostic fails. This information will be stored in the Freeze Frame and Failure Records buffers.
- A history DTC is stored.

Conditions for Clearing the MIL/DTC

- A history DTC will clear after 40 consecutive warm-up cycles without a fault.
- DTC(s) can be cleared by using the scan tool.

Diagnostic Aids

If the DTC sets when an accessory is operated, check for a poor connection or excessive current draw.

Any circuitry that is suspected as causing the intermittent complaint should be thoroughly checked for the following conditions:

- Backed-out terminals
- Improper mating
- Broken locks
- Improperly formed
- Damaged terminals
- Poor terminal-to-wiring connections
- Physical damage to the wiring harness

Test Description

Number(s) below refer to the step number(s) on the Diagnostic Table.

1. The OnBoard Diagnostic (OBD) System Check prompts the technician to complete some basic checks and store the freeze frame and failure records data on the scan tool if applicable. This creates an electronic copy of the data taken when the malfunction occurred. The information is then stored on the scan tool for later reference.
2. This checks if the generator is malfunctioning under load conditions.
4. Checks the ignition feed circuit for excessive resistance. An open circuit will cause a no-start condition.
7. The replacement ECM must be reprogrammed. Refer to the latest Techline procedure for ECM reprogramming.
9. If no malfunctions have been found at this point and no additional DTCs were set, refer to "Diagnostic Aids" in this section for additional checks and information.

DTC P0562 System Voltage (Engine Side) Too Low

Step	Action	Value(s)	Yes	No
1	Perform an On-Board Diagnostic (OBD) System Check. Is the system check complete?	-	Go to *Step 2*	Go to "On-Board Diagnostic System Check"
2	1. Install a scan tool and clear the Diagnostic Trouble Codes (DTCs). 2. Start the engine and raise the engine speed to the specified value. 3. Load the electrical system by turning on the headlights, high blower motor, etc. Is the ignition voltage less than the specified value?	1400 rpm 10 V	Go to *Step 3*	Go to *Step 8*
3	1. With the engine still running at the specified value. 2. Using a digital voltmeter (DVM), measure the battery voltage at the battery. Is the battery voltage greater than the specified value?	1400 rpm 12 V	Go to *Step 4*	Go to "Diagnostic Aids"
4	1. Turn the ignition switch OFF. 2. Disconnect the engine control module (ECM) connector at the ECM. 3. Turn the ignition switch ON with the engine OFF. 4. Using a DVM, measure the ignition voltage at the ignition feed circuit, terminal F16. Is the ignition voltage greater than the specified value?	10 V	Go to *Step 5*	Go to *Step 6*
5	Check for a malfunctioning connection at the ECM harness terminals and repair as necessary. Is a repair necessary?	-	Go to *Step 8*	Go to *Step 7*
6	Repair the poor connection (high resistance) in the ignition feed circuit. Is the action complete?	-	Go to *Step 8*	-
7	Replace the ECM. Is the action complete?	-	Go to *Step 8*	-
8	1. Using the scan tool, clear the DTCs. 2. Start the engine and idle at normal operating temperature. 3. Operate the vehicle within the conditions for setting this DTC as specified in the supporting text. Does the scan tool indicate that this diagnostic has run and passed?	-	Go to Step 9	Go to Step 2
9	Check if any additional DTCs are set. Are any DTCs displayed that have not been diagnosed?	-	Go to applicable DTC Table	System OK

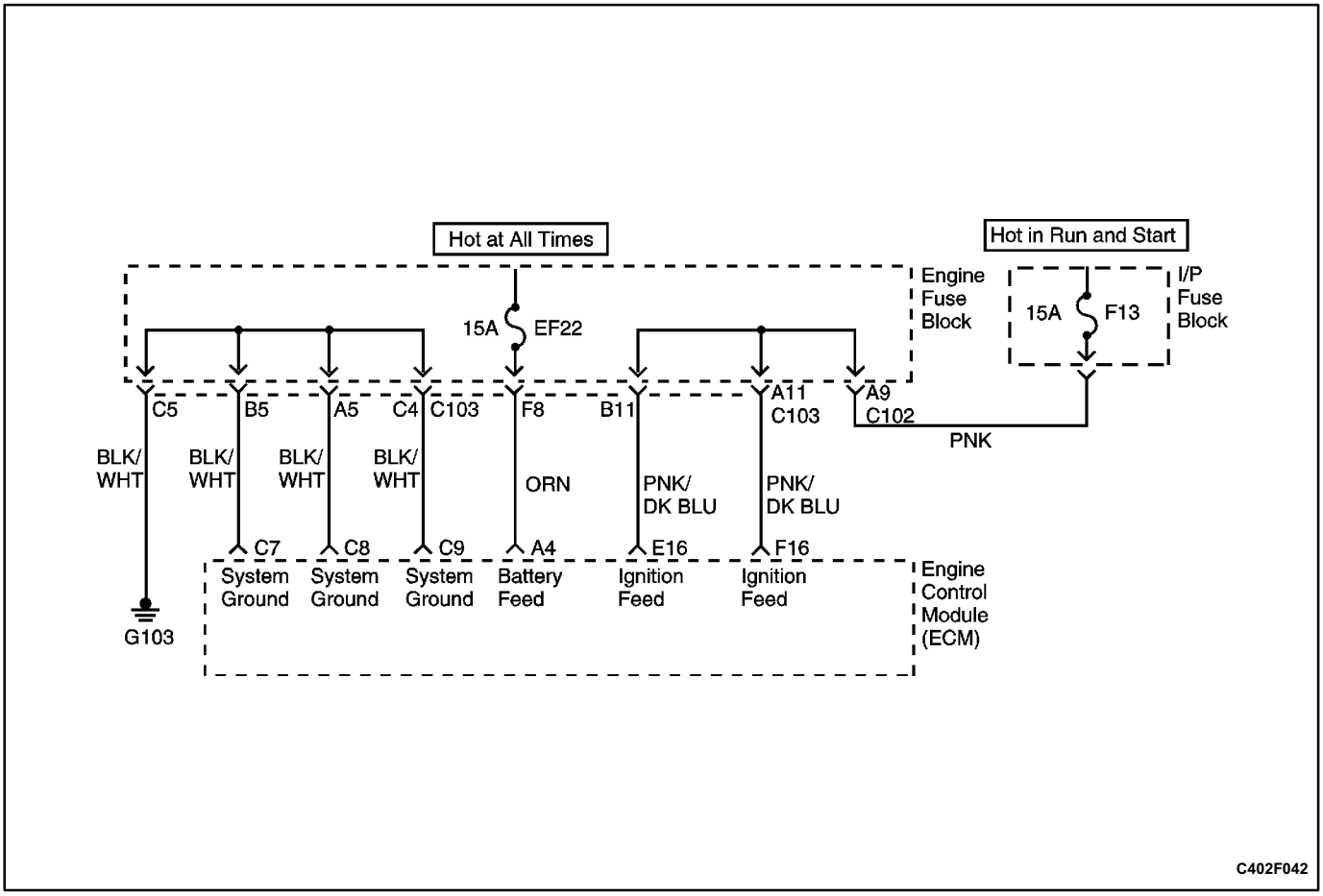

DIAGNOSTIC TROUBLE CODE (DTC) P0563 SYSTEM VOLTAGE (ENGINE SIDE) TOO HIGH

Circuit Description

The engine control module (ECM) monitors the ignition voltage on the ignition feed circuit to terminal F16 at the ECM. A system voltage Diagnostic Trouble Code (DTC) will set whenever the voltage is below a calibrated value.

Conditions for Setting the DTC

- Ignition ON.
- The system voltage is greater than 16 volts.

Action Taken When the DTC Sets

- The Malfunction Indicator Lamp (MIL) will not illuminate.
- The ECM will record operating conditions at the time the diagnostic fails. This information will be stored in the Freeze Frame and Failure Records buffers.
- A history DTC is stored.

Conditions for Clearing the MIL/DTC

- A history DTC will clear after 40 consecutive warm-up cycles without a fault.
- DTC(s) can be cleared by using the scan tool.

Diagnostic Aids

If the DTC sets when an accessory is operated, check for a poor connection or excessive current draw.

Any circuitry that is suspected as causing the intermittent complaint should be thoroughly checked for the following conditions:

- Backed out terminals
- Improper mating
- Broken locks
- Improperly formed
- Damaged terminals
- Poor terminal to wiring connections
- Physical damage to the wiring harness

Test Description

Number(s) below refer to the step number(s) on the Diagnostic Table.

1. The On-Board Diagnostic (OBD) System Check prompts the technician to complete some basic checks and store the freeze frame and failure records data on the scan tool if applicable. This creates an electronic copy of the data taken when the malfunction occurred. The information is then stored on the scan tool for later reference.
2. This checks if the generator is malfunctioning under load conditions.

4. Checks the ignition feed circuit 140 for excessive resistance. An open circuit will cause a no start condition.
7. The replacement ECM must be reprogrammed. Refer to the latest Techline procedure for ECM reprogramming.
9. If no malfunctions have been found at this point and no additional DTCs were set, refer to "Diagnostic Aids" in this section for additional checks and information.

DTC P0563 System Voltage (Engine Side) Too High

Step	Action	Value(s)	Yes	No
1	Perform an OnBoard Diagnostic (OBD) System Check. Is the system check complete?	-	Go to *Step 2*	Go to "OnBoard Diagnostic System Check"
2	1. Install a scan tool and clear the Diagnostic Trouble Codes (DTCs). 2. Start the engine and raise the engine speed to the specified value. 3. Load the electrical system by turning on the headlights, high blower motor, etc. Is the ignition voltage less than the specified value?	1400 rpm 10 V	Go to *Step 3*	Go to *Step 8*
3	1. With the engine still running at the specified value. 2. Using a digital voltmeter (DVM), measure the battery voltage at the battery. Is the battery voltage greater than the specified value?	1400 rpm 12 V	Go to *Step 4*	Go to "Diagnostic Aids"
4	1. Turn the ignition switch OFF. 2. Disconnect the engine control module (ECM) connector at the ECM. 3. Turn the ignition switch ON, with the engine OFF. 4. Using a DVM, measure the ignition voltage at the ignition feed circuit, terminal F16. Is the ignition voltage greater than the specified value?	10 V	Go to *Step 5*	Go to *Step 6*
5	Check for a malfunctioning connection at the ECM harness terminals and repair as necessary. Is a repair necessary?	-	Go to *Step 8*	Go to *Step 7*
6	Repair the poor connection (high resistance) in the ignition feed circuit. Is the action complete?	-	Go to *Step 8*	-
7	Replace the ECM. Is the action complete?	-	Go to *Step 8*	-
8	1. Using the scan tool, clear the DTCs. 2. Start the engine and idle at normal operating temperature. 3. Operate the vehicle within the conditions for setting this DTC as specified in the supporting text. Does the scan tool indicate that this diagnostic has run and passed?	-	Go to Step 9	Go to Step 2
9	Check if any additional DTCs are set. Are any DTCs displayed that have not been diagnosed?	-	Go to applicable DTC Table	System OK

DIAGNOSTIC TROUBLE CODE (DTC) P0601 ECM (ENGINE SIDE) CHECKSUM FAULT

Circuit Description

The engine control module (ECM) is the control center of the fuel injection system. It constantly looks at the information from various sensors, and controls the systems that affect vehicle performance. The ECM also performs the diagnostic function of the system. It can recognize operational problems, alert the driver through the Malfunction Indicator Lamp (MIL) (Check Engine), and store a Diagnostic Trouble Code (DTC) or DTCs which identify the problem areas to aid the technician in making repairs. An Electrically Erasable Programmable Read Only Memory (EEPROM) is used to house the program information and the calibrations required for engine, transmission, and powertrain diagnostics operation. The ECM uses a value called a checksum for error detection of the software. The checksum is a value that is equal to all the numbers in the software added together. The ECM adds all the values in the software, and if that value does not equal the checksum value, a checksum error is indicated.

Conditions for Setting the DTC

- The ECM detects more than 3 incorrect checksums.
- Ignition ON.
- Program ID not equal to value in S/W ($A9)

Action Taken When the DTC Sets

- MIL will illuminate.
- The ECM will attempt to record operating conditions at the time the failure is detected. However, since this is an internal ECM failure, this information may or may not be reliable. This information will be stored in the Freeze Frame and Failure Records buffers.
- A history DTC is stored.

Conditions for Clearing the MIL/DTC

- The MIL will turn off after three consecutive ignition cycles in which the diagnostic runs without a fault.
- A history DTC will clear after 40 consecutive warm-up cycles without a fault.
- DTC(s) can be cleared by using the scan tool.

Test Description

Number(s) below refer to the step number(s) on the Diagnostic Table.

1. The On-Board Diagnostic (OBD) System Check prompts the technician to complete some basic checks and store the freeze frame and failure records data on the scan tool if applicable. This creates an electronic copy of the data taken when the malfunction occurred. The information is then stored on the scan tool for later reference.
2. The replacement ECM must be reprogrammed. Refer to the latest Techline procedure for ECM reprogramming.

DTC P0601 ECM (Engine Side) Checksum Fault

Step	Action	Value(s)	Yes	No
1	Perform an On-Board Diagnostic (OBD) System Check. Is the system check complete?	-	Go to *Step 2*	Go to "On-Board Diagnostic System Check"
2	Replace the engine control module (ECM). Is the action complete?	-	Go to *Step 3*	-
3	1. Using the scan tool, clear the Diagnostic Trouble Codes (DTCs). 2. Start the engine and idle at normal operating temperature. 3. Operate the vehicle within the conditions for setting this DTC as specified in the supporting text. Does the scan tool indicate that this diagnostic has run and passed?	-	Go to *Step 4*	Go to *Step 2*
4	Check if any additional DTCs are set. Are any DTCs displayed that have not been diagnosed?	-	Go to applicable DTC Table	System OK

BLANK

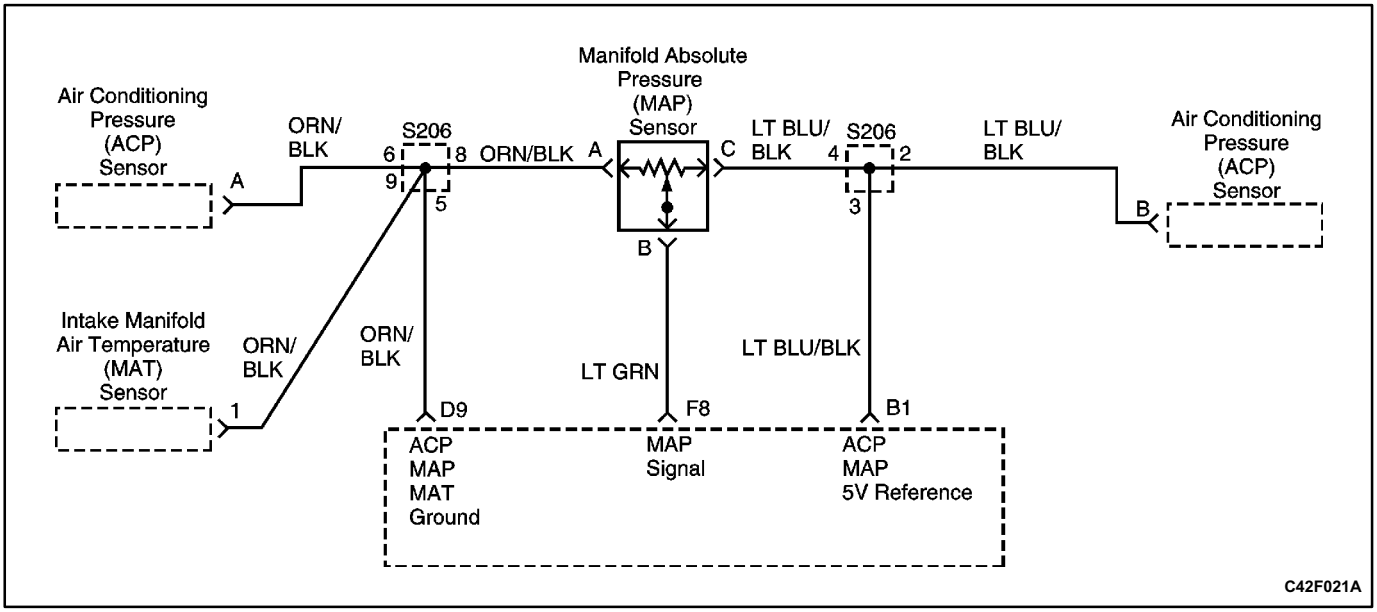

DIAGNOSTIC TROUBLE CODE (DTC) P1106
MANIFOLD ABSOLUTE PRESSURE INTERMITTENT HIGH VOLTAGE

Circuit Description

The Manifold Absolute Pressure (MAP) sensor responds to changes in intake manifold pressure (vacuum). The MAP signal voltage to the engine control module (ECM) varies from below 2 volts at idle (high vacuum) to above 4 volts with the key in the ON position, engine not running or at wide open throttle (WOT) (low vacuum).

A speed density" method of determining engine load is used. This is calculated using inputs from the MAP sensor, the rpm (58X), and the Intake Manifold Air Temperature (MAT)sensor. The MAP sensor is the main sensor used in this calculation, and measuring engine load is its main function.

The MAP sensor is also used to determine manifold pressure changes while the linear Exhaust Gas Recirculation (EGR) flow test diagnostic is being run (refer to DTC P0401). This determines the engine vacuum level for some other diagnostics and determines barometric pressure (BARO). The ECM compares the MAP sensor signal to calculated MAP based on throttle position (TP) and various other engine load factors. If the ECM detects a MAP signal voltage that is intermittently above the calculated value, DTC P1106 will set.

Conditions for Setting the DTC

- No TPS DTCs are present.
- TPS is less than 37% if rpm is less than or equal to 2500.
- TPS less than 56% if rpm is greater than 2500.
- The MAP is greater than 103 kPa.

Action Taken When the DTC Sets

- The Malfunction Indicator Lamp (MIL) will not illuminate.
- The ECM will store conditions which were present when the DTC was set as Failure Records data only.
- This information will not be stored in the Freeze Frame data.

Conditions for Clearing the MIL/DTC

- A history DTC will clear after 40 consecutive warm-up cycles without a fault.
- DTC P1106 can be cleared by using the scan tool CLEAR INFO function or by disconnecting the ECM battery feed.

Diagnostic Aids

Check for the following conditions:

- Leaking or plugged vacuum supply line to the MAP sensor.
- Inspect ECM harness connectors for backedout terminals, improper mating, broken locks, improperly formed or damaged terminals, and poor terminal-to-wire connection.
- Inspect the wiring harness for damage. If the harness appears to be OK, observe the MAP display on the scan tool while moving connectors and wiring harnesses related to the sensor. A change in the display will indicate the location of the fault.

Reviewing the Fail Records vehicle mileage since the diagnostic test last failed may help determine how often the condition that caused the DTC to be set occurs. This may assist in diagnosing the condition.

DTC P1106 Manifold Absolute Pressure Intermittent High Voltage

Step	Action	Value(s)	Yes	No
1	Perform an On-Board Diagnostic (OBD) System Check. Is the system check complete?	-	Go to *Step 2*	Go to "On-Board Diagnostic System Check"
2	1. Select Diagnostic Trouble Code (DTC) information. 2. Check Last Test Fail and note any other DTCs set. Is DTC P0108 also set.	-	Go to applicable DTC table	Go to *Step 3*
3	Check for a poor sensor ground circuit terminal A connection at the Manifold Absolute Pressure (MAP) sensor. Is a repair necessary?	-	Go to *Step 8*	Go to *Step 4*
4	Check the MAP signal circuit between the MAP sensor connector and the engine control module (ECM) for an intermittent short to voltage. Is a problem found.	-	Go to *Step 9*	Go to *Step 7*
5	Check for an intermittent short to voltage on the 5 volt reference B1 circuit between the ECM and the MAP Sensor Is a problem found?	-	Go to *Step 9*	Go to *Step 6*
6	Check for a poor sensor ground circuit terminal D9 connection at the ECM. Is a problem found?	-	Go to *Step 8*	Go to *Step 7*
7	Check for an intermittent open or a faulty splice in the sensor ground circuit. Is a problem found?	-	Go to *Step 10*	Go to "Diagnostic Aids"
8	Replace the faulty harness connector terminal for sensor ground circuit. Is the repair complete?	-	Go to *Step 10*	-
9	Locate and repair intermittent open/short circuit in the wiring harness as necessary. Is the repair complete?	-	Go to *Step 10*	-
10	1. Using the scan tool, clear the DTCs. 2. Start the engine and idle at normal operating temperature. 3. Operate the vehicle within the conditions for setting this DTC as specified in the supporting text. Does the scan tool indicate that this diagnostic ran and passed?	-	Go to *Step 11*	Go to *Step 2*
11	Check if any additional DTCs are set. Are any DTCs displayed that have not been diagnosed?	-	Go to applicable DTC table	System OK

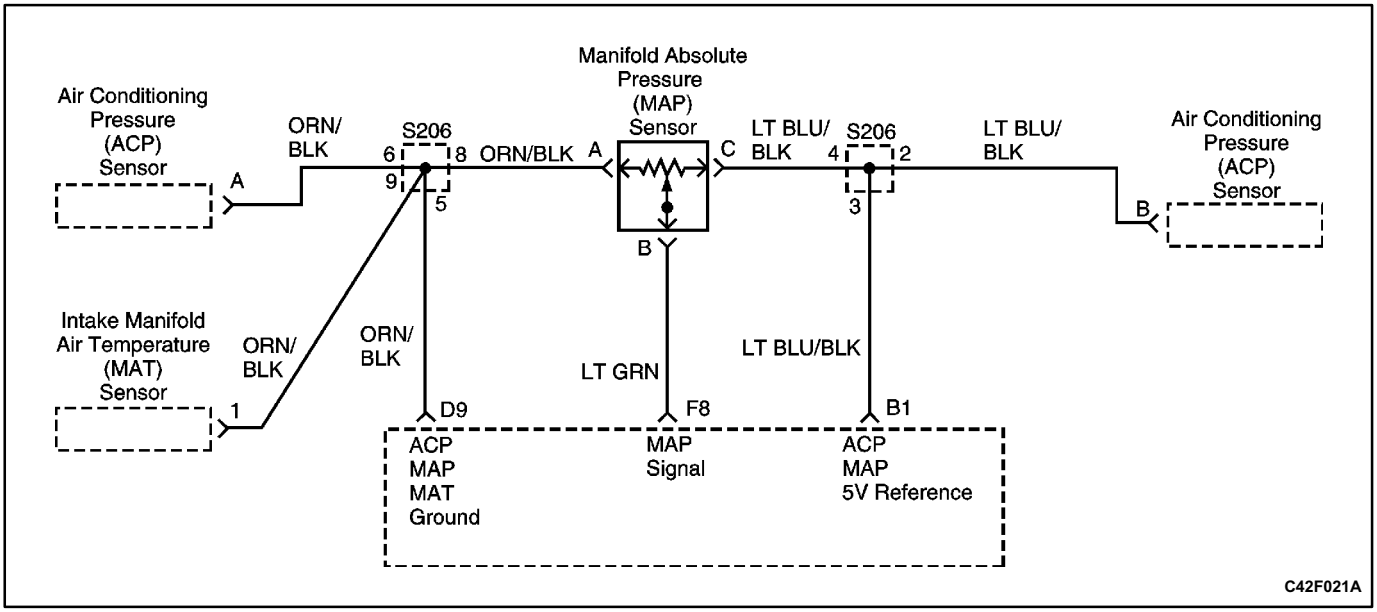

DIAGNOSTIC TROUBLE CODE (DTC) P1107
MANIFOLD ABSOLUTE PRESSURE INTERMITTENT LOW VOLTAGE

Circuit Description

The Manifold Absolute Pressure (MAP) sensor responds to changes in intake manifold pressure (vacuum). The MAP signal voltage to the engine control module (ECM) varies from below 2 volts at idle (high vacuum) to above 4 volts with the key in the ON position, engine not running or at wide open throttle (WOT) (low vacuum).

A speed density" method of determining engine load is used. This is calculated using inputs from the MAP sensor, the rpm (58X), and the Intake Manifold Air Temperature (MAT)sensor. The MAP sensor is the main sensor used in this calculation, and measuring engine load is its main function.

The MAP sensor is also used to determine manifold pressure changes while the linear Exhaust Gas Recirculation (EGR) flow test diagnostic is being run (refer to DTC P0401). This determines engine vacuum level for some other diagnostics and determines barometric pressure (BARO). The ECM compares the MAP sensor signal to calculated MAP based on throttle position (TP) and various other engine load factors. If the ECM detects a MAP signal voltage that is intermittently above the calculated value, DTC P1107 will set.

Conditions for Setting the DTC

- Engine running.
- No TPS DTCs are present.
- The MAP is less than 103 kPa.
- TPS is greater than or equal to 2% if rpm is less than or equal to 2000.
- TPS is greater than 5% if rpm is greater than 2000.

Action Taken When the DTC Sets

- The Malfunction Indicator Lamp (MIL) will not illuminate.
- The ECM will store conditions which were present when the DTC was set as Failure Records data only.
- This information will not be stored in the Freeze Frame data.

Conditions for Clearing the MIL/DTC

- A history DTC will clear after 40 consecutive warmup cycles without a fault.
- DTC P1107 can be cleared by using the scan tool CLEAR INFO function or by disconnecting the ECM battery feed.

Diagnostic Aids

Check for the following conditions:

- Leaking or plugged vacuum supply line to the MAP sensor.
- Inspect ECM harness connectors for backedout terminals, improper mating, broken locks, improperly formed or damaged terminals, and poor terminal-to-wire connection.
- Inspect the wiring harness for damage. If the harness appears to be OK, observe the MAP display on the scan tool while moving connectors and wiring harnesses related to the sensor. A change in the display will indicate the location of the fault.

Reviewing the Fail Records vehicle mileage since the diagnostic test last failed may help determine how often the condition that caused the DTC to be set occurs. This may assist in diagnosing the condition.

DTC P1107 Manifold Absolute Pressure Intermittent Low Voltage

Step	Action	Value(s)	Yes	No
1	Perform an On-Board Diagnostic (OBD) System Check. Is the system check complete?	-	Go to *Step 2*	Go to "On-Board Diagnostic System Check"
2	1. Select Diagnostic Trouble Code (DTC) information. 2. Check Last Test Fail and note any other DTCs set. Is DTC P0107 also set.	-	Go to applicable DTC table	Go to *Step 3*
3	Check for a poor 5 volt reference circuit or Manifold Absolute Pressure (MAP) signal circuit terminal connection at the MAP sensor. Is a repair necessary?	-	Go to *Step 5*	Go to *Step 4*
4	Check the MAP signal circuit between the MAP sensor connector and the engine control module (ECM) for an intermittent short to voltage. Is a problem found.	-	Go to *Step 6*	Go to *Step 7*
5	Replace the faulty harness connector terminal for the 5 volt reference circuit and/or the MAP signal circuit. Is the repair complete?	-	Go to *Step 7*	-
6	Repair intermittent open/short circuit in the wiring harness. Is the repair complete?	-	Go to *Step 7*	-
7	1. Using the scan tool, clear the DTCs. 2. Start the engine and idle at normal operating temperature. 3. Operate the vehicle within the conditions for setting this DTC as specified in the supporting text. Does the scan tool indicate that this diagnostic ran and passed?	-	Go to *Step 8*	Go to *Step 2*
8	Check if any additional DTCs are set. Are any DTCs displayed that have not been diagnosed?	-	Go to applicable DTC table	System OK

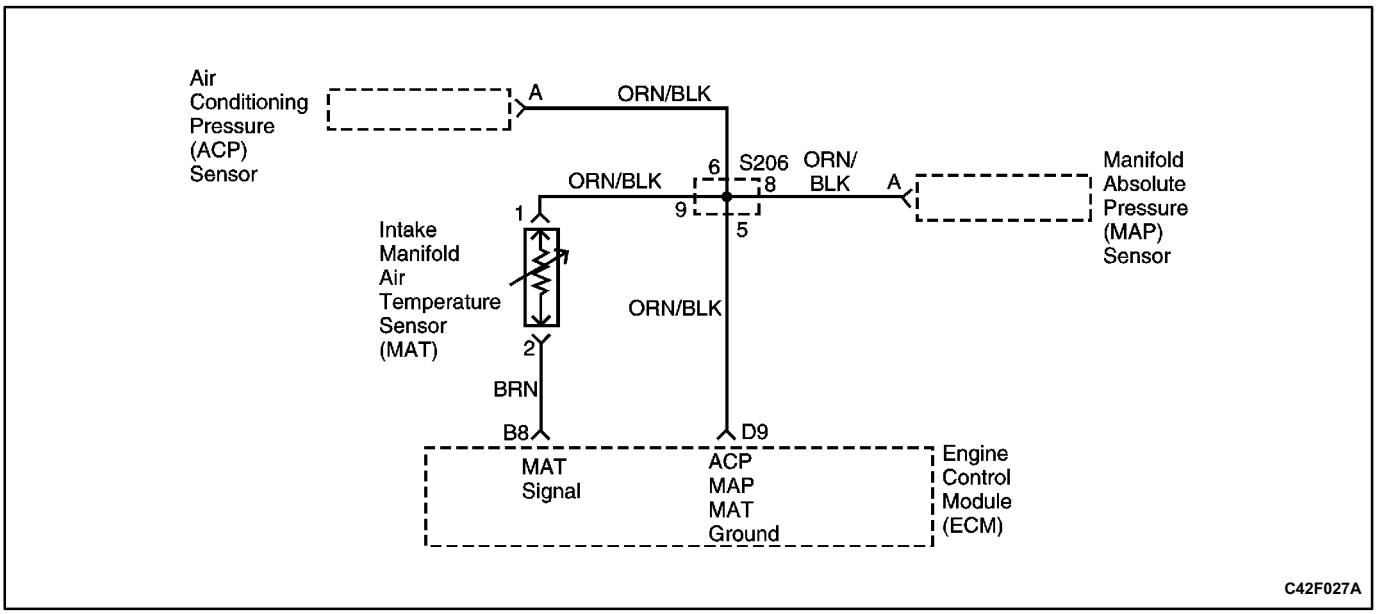

DIAGNOSTIC TROUBLE CODE (DTC) P1111
INTAKE AIR TEMPERATURE INTERMITTENT HIGH VOLTAGE

Circuit Description

The Intake Manifold Air Temperature (MAT)sensor is a thermistor which measures the temperature of the air entering the engine. The engine control module (ECM) applies 5 volts through a pullup resistor to the MAT sensor. When the intake air is cold, the resistance is high, and the ECM will monitor a high signal voltage on the MAT signal circuit. If the intake air is warm, the sensor resistance is lower causing the ECM to monitor a lower voltage. Diagnostic Trouble Code (DTC) P1111 will set when the ECM detects an excessively high signal voltage on the intake air temperature sensor signal circuit.

Conditions for Setting the DTC

- DTC P0502 not set
- Engine has been running for over 120 seconds.
- Vehicles speed is less than 113 km/h (70 mph).
- Calculated air flow is less than 30 g/second.
- Engine Coolant Temperature (CTS) is above 8° C (18° F).

Action Taken When the DTC Sets

- The ECM will substitute a default value for MAT.
- The ECM will store conditions which were present when the DTC set as Failure Records data only. This information will not be stored as Freeze Frame data.
- DTC P1111 does not illuminate the Malfunction Indicator Lamp (MIL).

Conditions for Clearing the MIL/DTC

- A history DTC will clear after 40 consecutive warmup cycles without a fault.
- DTC P1111 can be cleared by using the scan tool CLEAR INFO function or by disconnecting the ECM battery feed.

Diagnostic Aids

Check for the following conditions:

- Poor connection at the ECM. Inspect harness connectors for backedout terminals, improper mating, broken locks, improperly formed or damaged terminals, and poor terminaltowire connection.
- Damaged harness. Inspect the wiring harness for damage. If the harness appears to be OK, observe the MAT display on the scan tool while moving connectors and wiring harnesses related to the MAT sensor. A change in the MAT display will indicate the location of the fault.
- Reviewing the Fail Records vehicle mileage since the diagnostic test last failed may help determine how often the condition that caused the DTC to be set occurs. This may assist in diagnosing the condition.
- Use the Temperature vs. Resistance Values table to evaluate the possibility of a skewed sensor. Refer to "Temperature vs. Resistance" in this section.

Intake Air Temperature Sensor

C	F	OHMS
Temperature Vs. Resistance Values (approximate)		
100	212	177
80	176	332
60	140	667
45	113	1188
35	95	1802
25	77	2796
15	59	4450
5	41	7280
5	23	12300
15	5	21450
30	22	52700
40	40	100700

Test Description

Number(s) below refer to the step number(s) on the Diagnostic Table.

1. The On-Board Diagnostic (OBD) System Check prompts the technician to complete some basic checks and store the freeze frame and failure records data on the scan tool if applicable. This creates an electronic copy of the data taken when the malfunction occurred. The information is then stored on the scan tool for later reference.

DTC P1111 Intake Air Temperature Intermittent High Voltage

Step	Action	Value(s)	Yes	No
1	Perform an OnBoard Diagnostic (OBD) System Check. Is the system check complete?	-	Go to *Step 2*	Go to "OnBoard Diagnostic System Check"
2	1. Turn the ignition ON. 2. Install the scan tool. Is DTC P0113 set?	-	Go to applicable DTC table	Go to *Step 3*
3	Check the scan tool. Is DTC P1106 set?	-	Go to *Step 6*	Go to *Step 4*
4	1. Check for a poor sensor ground circuit terminal 1 connection at the Idle Air Temperature (MAT) sensor. 2. If a problem is found, repair as necessary. Is a problem found?	-	Go to *Step 10*	Go to *Step 5*
5	1. Check for a poor MAT signal circuit terminal 2 connection at the MAT sensor. 2. If a problem is found, repair as necessary. Is a problem found?	-	Go to *Step 10*	Go to *Step 6*
6	1. Check the MAT signal circuit between the MAT sensor connector and the engine control module (ECM) for an intermittent open. 2. If a problem is found, repair as necessary. Is a problem found?	-	Go to *Step 10*	Go to *Step 7*
7	1. Check the MAT signal circuit between the MAT sensor connector and the ECM for an intermittent short to voltage. 2. If a problem is found, repair as necessary. Is a problem found?	-	Go to *Step 10*	Go to *Step 8*

DTC P1111 Intake Air Temperature Intermittent High Voltage (Cont'd)

Step	Action	Value(s)	Yes	No
8	1. Check for a poor sensor ground circuit terminal D9 connection at the ECM. 2. If a problem is found, repair as necessary. Is a problem found?	-	Go to *Step 10*	Go to *Step 9*
9	1. Check for an intermittent open or a faulty splice in the sensor ground circuit. 2. If a problem is found, repair as necessary. Is a problem found?	-	Go to *Step 10*	Go to "Diagnostic Aids"
10	1. Using the scan tool, clear the Diagnostic Trouble Codes (DTCs). 2. Start the engine and idle at normal operating temperature. 3. Operate the vehicle within the conditions for setting this DTC as specified in the supporting text. Does the scan tool indicate that this diagnostic ran and passed?	-	Go to *Step 11*	Go to *Step 2*
11	Check if any additional DTCs are set. Are any DTCs displayed that have not been diagnosed?	-	Go to applicable DTC table	System OK

BLANK

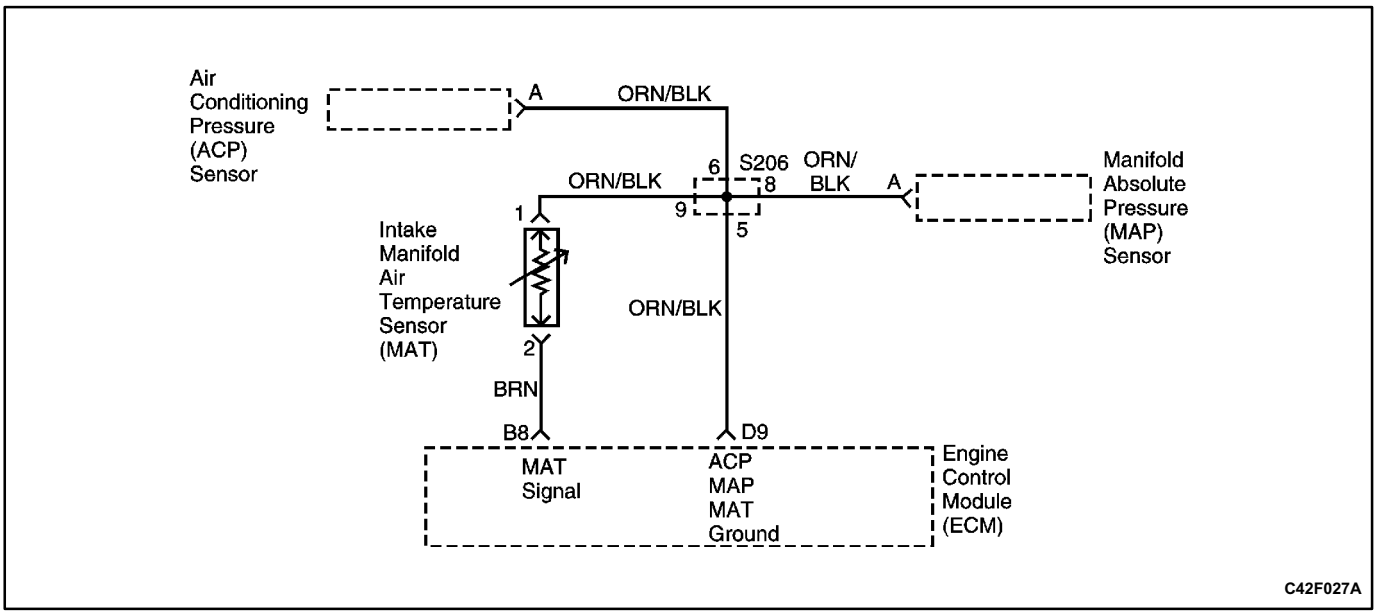

DIAGNOSTIC TROUBLE CODE (DTC) P1112
INTAKE AIR TEMPERATURE INTERMITTENT LOW VOLTAGE

Circuit Description

The Intake Manifold Air Temperature (MAT)sensor is a thermistor which measures the temperature of the air entering the engine. The engine control module (ECM) applies 5 volts through a pullup resistor to the MAT sensor. When the intake air is cold, the resistance is high, and the ECM will monitor a high signal voltage on the MAT signal circuit. If the intake air is warm, the sensor resistance is lower causing the ECM to monitor a lower voltage. Diagnostic Trouble Code (DTC) P1112 will set when the ECM detects an intermittently low signal voltage on the intake air temperature sensor signal circuit.

Conditions for Setting the DTC

- DTC P0502 not set
- Engine has been running for over 120 seconds.
- Vehicle speed is greater than 25 mph.

Action Taken When the DTC Sets

- The ECM will substitute a default value for intake air temperature.
- The Malfunction Indicator Lamp (MIL) will not illuminate.
- The ECM will store conditions which were present when the DTC was set as Failure Records data only. This information will not be stored as Freeze Frame data.
- DTC P1111 does not illuminate the MIL.

Conditions for Clearing the MIL/DTC

- A history DTC will clear after 40 consecutive warmup cycles without a fault.
- DTC(s) can be cleared by using the scan tool CLEAR INFO function or by disconnecting the ECM battery feed.

Diagnostic Aids

Check for the following conditions:

- Poor connection at the ECM. Inspect harness connectors for backedout terminals, improper mating, broken locks, improperly formed or damaged terminals, and poor terminaltowire connection.
- Damaged harness. Inspect the wiring harness for damage. If the harness appears to be OK, observe the MAT display on the scan tool while moving connectors and wiring harnesses related to the MAT sensor. A change in the MAT display will indicate the location of the fault.
- Reviewing the Fail Records vehicle mileage since the diagnostic test last failed may help determine how often the condition that caused the DTC to be set occurs. This may assist in diagnosing the condition.
- Use the Temperature vs. Resistance Values table to evaluate the possibility of a skewed sensor. Refer to "Temperature vs. Resistance" in this section.

Intake Air Temperature Sensor

C	F	OHMS
Temperature Vs. Resistance Values (approximate)		
100	212	177
80	176	332
60	140	667
45	113	1188
35	95	1802
25	77	2796
15	59	4450
5	41	7280
5	23	12300
15	5	21450
30	22	52700
40	40	100700

Test Description

Number(s) below refer to the step number(s) on the Diagnostic Chart.

1. The On-Board Diagnostic (OBD) System Check prompts the technician to complete some basic checks and store the freeze frame and failure records data on the scan tool if applicable. This creates an electronic copy of the data taken when the malfunction occurred. The information is then stored on the scan tool for later reference.
2. Verifies the fault is present.
3. If DTC P1112 can be repeated only by duplicating the Fail Records conditions, refer to the Temperature Vs. Resistance Value Chart. The chart may be used to test the MAT sensor at various temperatures to evaluate the possibility of a shifted" sensor that may be shorted above or below a certain temperature. If this is the case, replace the MAT sensor.

DTC P1112 Intake Air Temperature Intermittent Low Voltage

Step	Action	Value(s)	Yes	No
1	Perform an On-Board Diagnostic (OBD) System Check. Is the system check complete?	-	Go to *Step 2*	Go to On-Board Diagnostic System Check"
2	1. Turn the Ignition ON. 2. Install the scan tool. Is DTC P0112 also set?	-	Go to applicable DTC table	Go to *Step 3*
3	1. Check the Idle Air Temperature (MAT) signal circuit between the MAT sensor connector and the engine control module (ECM) for an intermittent short to ground. 2. If a problem is found, repair as necessary. Is a problem found?	-	Go to *Step 5*	Refer to Diagnostic Aids"
4	1. Using the scan tool, clear the Diagnostic Trouble Codes (DTCs). 2. Start the engine and idle at normal operating temperature. 3. Operate the vehicle within the conditions for setting this DTC as specified in the supporting text. Does the scan tool indicate that this diagnostic ran and passed?	-	Go to *Step 5*	Go to *Step 2*
5	Check if any additional DTCs are set. Are any DTCs displayed that have not been diagnosed?	-	Go to applicable DTC table	System OK

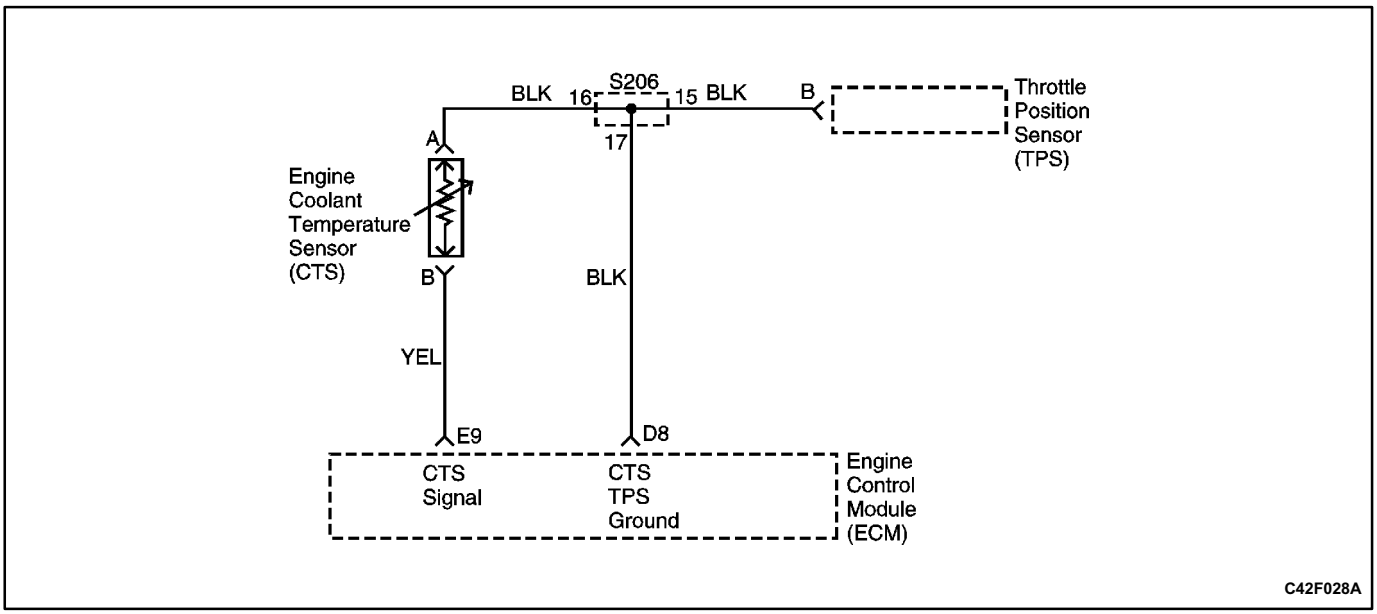

DIAGNOSTIC TROUBLE CODE (DTC) P1114
ENGINE COOLANT TEMPERATURE INTERMITTENT LOW VOLTAGE

Circuit Description

The Engine Coolant Temperature (CTS) sensor is a thermistor mounted in the engine coolant stream. The engine control module (ECM) applies a voltage (about 5.0 volts) through a pullup resistor to the CTS signal circuit. When the engine coolant is cold, the sensor resistance is high, and the ECM will monitor a high signal voltage. As the engine coolant warms, the sensor resistance is less, and the CTS signal voltage measured at the ECM drops. With a fully warmed up engine, the CTS signal voltage should measure about 1.5 to 2.0 volts. If the ECM detects an CTS signal that is intermittently below the range of the CTS sensor, Diagnostic Trouble Code (DTC) P1114 will set.

Conditions for Setting the DTC

- Engine run time is longer than 2 minute.

Action Taken When the DTC Sets

- The Malfunction Indicator Lamp (MIL) will not illuminate.
- The ECM will store conditions which were present when the DTC set as Failure Records data only. This information will not be stored as Freeze Frame data.

Conditions for Clearing the MIL/DTC

- A history DTC will clear after 40 consecutive warmup cycles without a fault.
- DTC(s) can be cleared by using the scan tool CLEAR INFO function or by disconnecting the ECM battery feed.

Diagnostic Aids

Check for the following conditions:

- Poor connection at the ECM. Inspect harness connectors for backed-out terminals, improper mating, broken locks, improperly formed or damaged terminals, and poor terminal-to-wire connection.
- Damaged harness. Inspect the wiring harness for damage. If the harness appears to be OK, observe the CTS display on the scan tool while moving connectors and wiring harnesses related to the CTS sensor. A change in the CTS display will indicate the location of the fault.
- Reviewing the Fail Records vehicle mileage since the diagnostic test last failed may help determine how often the condition that caused the DTC to be set occurs. This may assist in diagnosing the condition.
- Use the Temperature vs. Resistance Values table to evaluate the possibility of a skewed sensor. Refer to "Temperature vs. Resistance" in this section.

Engine Coolant Temperature Sensor

C	F	OHMS
Temperature Vs. Resistance Values (approximate)		
100	212	177
80	176	332
60	140	667
45	113	1188
35	95	1802
25	77	2796
15	59	4450
5	41	7280
5	23	12300
15	5	21450
30	22	52700
40	40	100700

Test Description

Number(s) below refer to the step number(s) on the Diagnostic Table.

1. The On-Board Diagnostic (OBD) System Check prompts the technician to complete some basic checks and store the freeze frame and failure records data on the scan tool if applicable. This creates an electronic copy of the data taken when the malfunction occurred. The information is then stored on the scan tool for later reference

DTC P1114 Engine Coolant Temperature Intermittent Low Voltage

Step	Action	Value(s)	Yes	No
1	Perform an On-Board Diagnostic (OBD) System Check. Is the system check complete?	-	Go to *Step 2*	Go to "On-Board Diagnostic System Check"
2	1. Turn the Ignition ON. 2. Install the scan tool. Is Diagnostic Trouble Code (DTC) P0117 set?	-	Go to applicable DTC table	Go to *Step 3*
3	1. Check the Engine Coolant Temperature (CTS) signal circuit between the CTS sensor connector and the engine control module (ECM) for an intermittent short to ground. 2. If a problem is found, repair as necessary. Is a problem found?	-	Go to *Step 5*	Refer to "Diagnostic Aids"
4	1. Using the scan tool, clear the DTCs. 2. Start the engine and idle at normal operating temperature. 3. Operate the vehicle within the conditions for setting this DTC as specified in the supporting text. Does the scan tool indicate that this diagnostic ran and passed?	-	Go to *Step 5*	Go to *Step 2*
5	Check if any additional DTCs are set. Are any DTCs displayed that have not been diagnosed?	-	Go to applicable DTC table	System OK

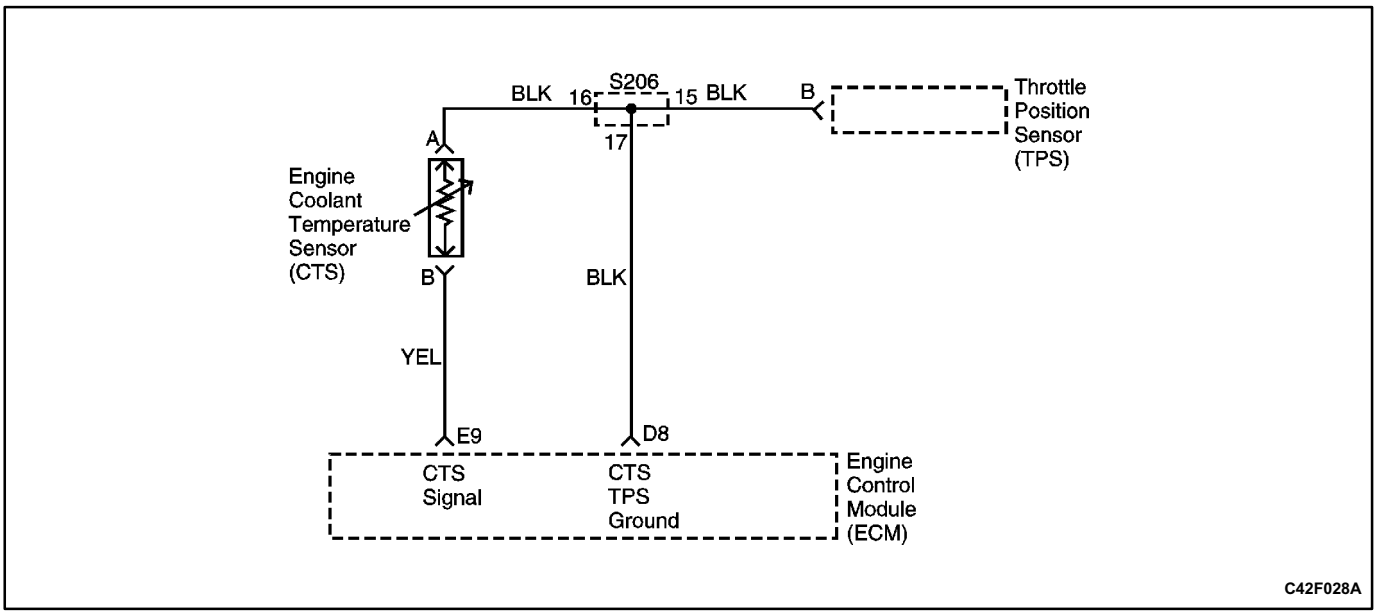

DIAGNOSTIC TROUBLE CODE (DTC) P1115
ENGINE COOLANT TEMPERATURE INTERMITTENT HIGH VOLTAGE

Circuit Description

The Engine Coolant Temperature (CTS) sensor is a thermistor mounted in the engine coolant stream. The engine control module (ECM) applies a voltage (about 5.0 volts) through a pull-up resistor to the CTS signal circuit. When the engine coolant is cold, the sensor resistance is high, and the ECM will monitor a high signal voltage. As the engine coolant warms, the sensor resistance is less, and the CTS signal voltage measured at the ECM drops. With a fully warmed up engine, the CTS signal voltage should measure about 1.5 to 2.0 volts. If the ECM detects an CTS signal that is intermittently above the range of the CTS sensor, Diagnostic Trouble Code (DTC) P1115 will set.

Conditions for Setting the DTC

- Engine run time is greater than 2 minutes.

Action Taken When the DTC Sets

- The Malfunction Indicator Lamp (MIL) will not illuminate.
- The ECM will store conditions which were present when the DTC was set as Failure Records data only. This information will not be stored as Freeze Frame data.

Conditions for Clearing the MIL/DTC

- A history DTC will clear after 40 consecutive warmup cycles without a fault.
- DTC(s) can be cleared by using the scan tool CLEAR INFO function or by disconnecting the ECM battery feed.

Diagnostic Aids

Check for the following conditions:

- Poor connection at the ECM. Inspect harness connectors for backedout terminals, improper mating, broken locks, improperly formed or damaged terminals, and poor terminaltowire connection.
- Damaged harness. Inspect the wiring harness for damage. If the harness appears to be OK, observe the CTS display on the scan tool while moving connectors and wiring harnesses related to the CTS sensor. A change in the CTS display will indicate the location of the fault.
- Reviewing the Fail Records vehicle mileage since the diagnostic test last failed may help determine how often the condition that caused the DTC to be set occurs. This may assist in diagnosing the condition.
- Use the Temperature vs. Resistance Values table to evaluate the possibility of a skewed sensor. Refer to "Temperature vs. Resistance" in this section.

Engine Coolant Temperature Sensor

C	F	OHMS
Temperature Vs. Resistance Values (approximate)		
100	212	177
80	176	332
60	140	667
45	113	1188
35	95	1802
25	77	2796
15	59	4450
5	41	7280
5	23	12300
15	5	21450
30	22	52700
40	40	100700

Test Description

Number(s) below refer to the step number(s) on the Diagnostic Table.

1. The On-Board Diagnostic (OBD) System Check prompts the technician to complete some basic checks and store the freeze frame and failure records data on the scan tool if applicable. This creates an electronic copy of the data taken when the malfunction occurred. The information is then stored on the scan tool for later reference.

DTC P1115 Engine Coolant Temperature Intermittent High Voltage

Step	Action	Value(s)	Yes	No
1	Perform an On-Board Diagnostic (OBD) System Check. Is the system check complete?	-	Go to *Step 2*	Go to On-Board Diagnostic System Check"
2	1. Turn the ignition ON. 2. Install the scan tool. Is Diagnostic Trouble Code (DTC) P0118 set?	-	Go to applicable DTC Table	Go to *Step 3*
3	Check the scan tool. Is DTC P1121 also set?	-	Go to *Step 8*	Go to *Step 4*
4	1. Check for a poor sensor ground circuit terminal A connection at the Engine Coolant Temperature (CTS) sensor. 2. If a problem is found, repair as necessary. Is a problem found?	-	Go to *Step 10*	Go to *Step 5*
5	1. Check for a poor CTS signal circuit terminal B connection at the CTS sensor. 2. If a problem is found, repair as necessary. Is a problem found?	-	Go to *Step 10*	Go to *Step 6*
6	1. Check the CTS signal circuit between the CTS sensor connector and the engine control module (ECM) for an intermittent open. 2. If a problem is found, repair as necessary. Is a problem found?	-	Go to *Step 10*	Go to *Step 7*
7	1. Check the CTS signal circuit between the CTS sensor connector and the ECM for an intermittent short to voltage. 2. If a problem is found, repair as necessary. Is a problem found?	-	Go to *Step 10*	Go to *Step 8*

DTC P1115 Engine Coolant Temperature Intermittent High Voltage (Cont'd)

Step	Action	Value(s)	Yes	No
8	1. Check for a poor sensor ground circuit terminal D8 connection at the ECM. 2. If a problem is found, repair as necessary. Is a problem found?	-	Go to *Step 10*	Go to *Step 9*
9	1. Check for an intermittent open or a faulty splice in the sensor ground circuit. 2. If a problem is found, repair as necessary. Is a problem found?	-	Go to *Step 10*	Go to "Diagnostic Aids"
10	1. Using the scan tool, clear the DTCs. 2. Start the engine and idle at normal operating temperature. 3. Operate the vehicle within the conditions for setting this DTC as specified in the supporting text. Does the scan tool indicate that this diagnostic ran and passed?	-	Go to *Step 11*	Go to *Step 2*
11	Check if any additional DTCs are set. Are any DTCs displayed that have not been diagnosed?	-	Go to applicable DTC table	System OK

BLANK

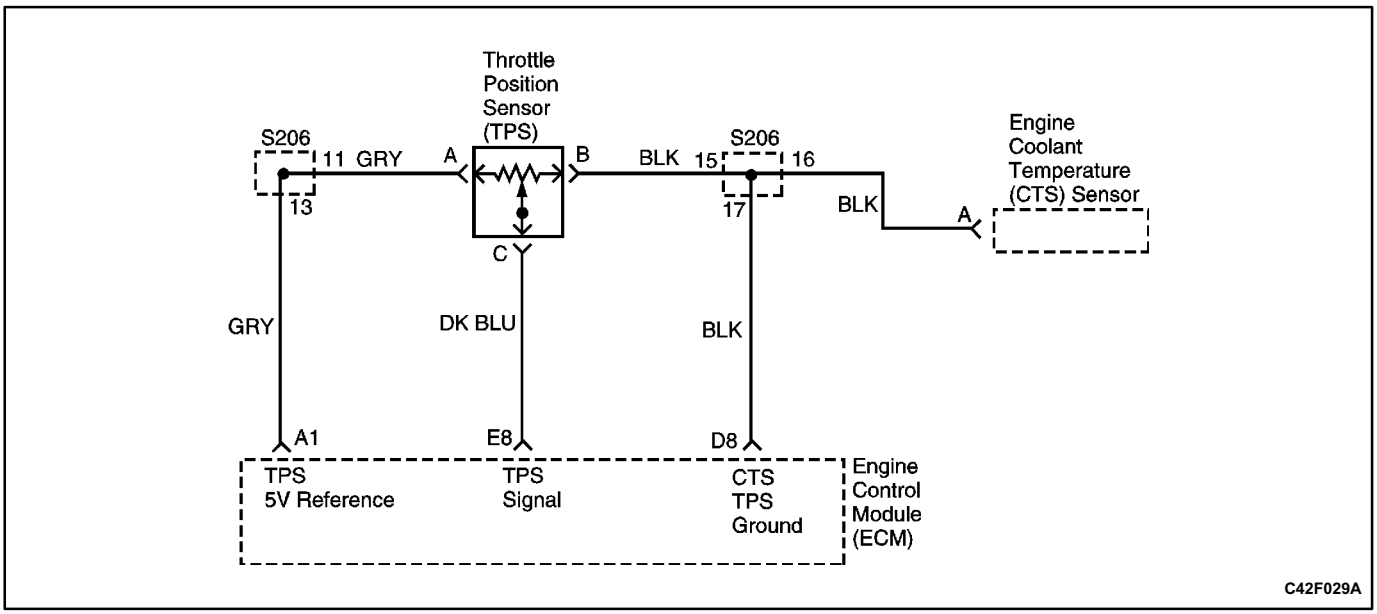

DIAGNOSTIC TROUBLE CODE (DTC) P1121
THROTTLE POSITION SENSOR INTERMITTENT HIGH VOLTAGE

Circuit Description

The Throttle Position Sensor (TPS) circuit provides a voltage signal that changes relative to throttle blade angle. The TPS sends a voltage signal back to the engine control module (ECM) relative to the throttle plate opening. The voltage signal will vary from approximately 1 volt at closed throttle, to over 4.9 v at wide open throttle (WOT).

The TP signal is used by the ECM for fuel control and for most of the ECM controlled outputs. The TP signal is one of the most important inputs used by the ECM for fuel control and most of the ECM controlled outputs. If the ECM detects a TP signal that is intermittently above the range of the TPS, Diagnostic Trouble Code (DTC) P1121 will be set.

Conditions for Setting the DTC

- The ignition is ON.
- TPS voltage indicates a throttle voltage intermittently greater than 4.9 volts.

Action Taken When the DTC Sets

- The Malfunction Indicator Lamp (MIL) will not illuminate.
- The ECM will store conditions which were present when the DTC set as Failure Records data only. This information will not be stored as Freeze Frame data.

Conditions for Clearing the MIL/DTC

- The history DTC P1121 will clear after 40 consecutive warmup cycles in which the diagnostic runs without a fault.
- DTC(s) can be cleared by using the scan tool CLEAR INFO function or be disconnecting the ECM power feed.

Diagnostic Aids

Check for the following conditions:

- Poor connection at the ECM. Inspect harness connectors for backedout terminals, improper mating, broken locks, improperly formed or damaged terminals, and poor terminaltowire connection.
- Damaged harness. Inspect the wiring harness for damage. If the harness appears OK, observe the throttle position display on the scan tool while moving connectors and wiring harnesses related to the TPS. A change in the display will indicate the location of the fault.

If DTC P1121 cannot be duplicated, reviewing the Fail Records vehicle mileage since the diagnostic test last failed may help determine how often the condition that caused the DTC to be set occurs. This may assist in diagnosing the condition.

Test Description

Number(s) below refer to the step number(s) on the Diagnostic Table.

1. The OnBoard Diagnostic (OBD) System Check prompts the technician to complete some basic checks and store the freeze frame and failure records data on the scan tool if applicable. This creates an electronic copy of the data taken when the malfunction occurred. The information is then stored on the scan tool for later reference.

DTC P1121 Throttle Position Sensor Intermittent High Voltage

Step	Action	Value(s)	Yes	No
1	Perform an OnBoard Diagnostic (OBD) System Check. Is the system check complete?	-	Go to *Step 2*	Go to "OnBoard Diagnostic System Check"
2	1. Turn the ignition ON. 2. Install the scan tool. Is Diagnostic Trouble Code (DTC) P0123 also set?	-	Go to applicable DTC table	Go to *Step 3*
3	Check for a poor sensor ground circuit terminal B connection at the Throttle Position Sensor (TPS). Is a problem found?	-	Go to *Step 7*	Go to *Step 4*
4	Check the Throttle Position (TP) signal circuit between the TPS connector and the engine control module (ECM) for an intermittent short to voltage. Is a problem found?	-	Go to *Step 8*	Go to *Step 6*
5	Check for a poor sensor ground terminal D8 connection at the ECM. Is a problem found?	-	Go to *Step 7*	Go to *Step 6*
6	Check for an intermittent open or a faulty splice in the sensor ground circuit. Is a problem found?	-	Go to *Step 8*	Go to "Diagnostic Aids"
7	Replace the faulty harness connector terminal for sensor ground circuit. Is action complete?	-	Go to *Step 9*	-
8	Repair the intermittent open/short circuit in wiring harness as necessary. Is the action complete?	-	Go to *Step 9*	-
9	1. Using the scan tool, clear the DTCs. 2. Start the engine and idle at normal operating temperature. 3. Operate the vehicle within the conditions for setting this DTC as specified in the supporting text. Does the scan tool indicate that this diagnostic ran and passed?	-	Go to *Step 10*	Go to *Step 2*
10	Check if any additional DTCs are set. Are any DTCs displayed that have not been diagnosed?	-	Go to applicable DTC table	System OK

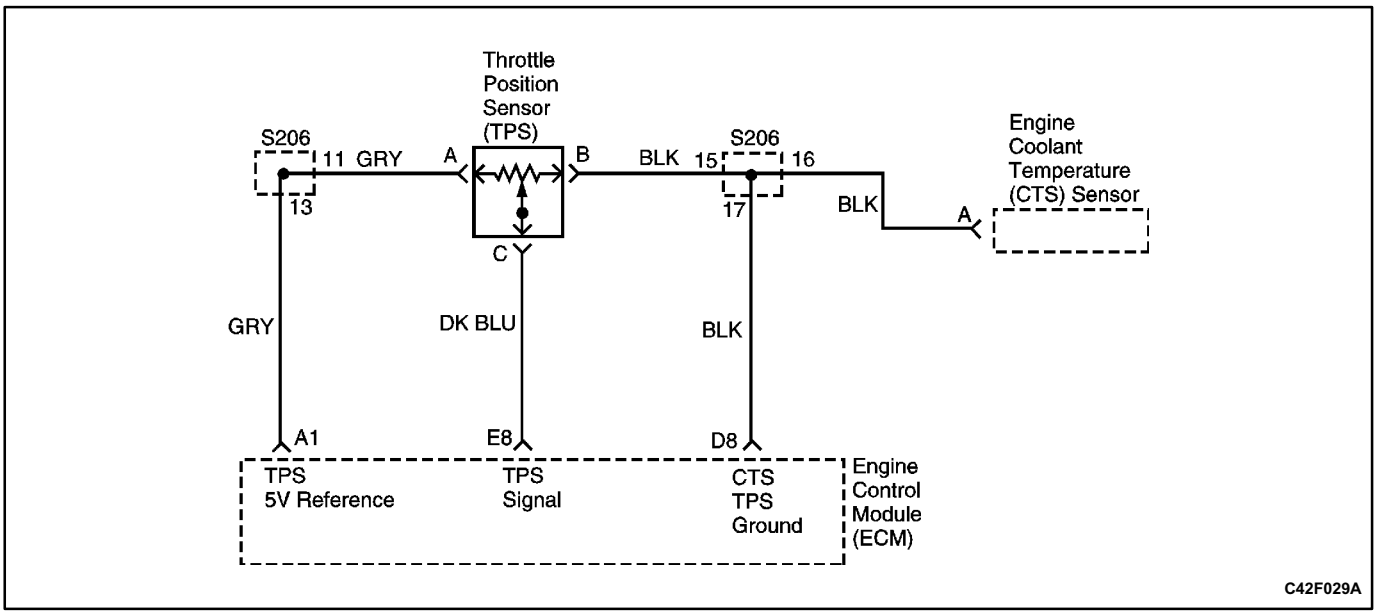

DIAGNOSTIC TROUBLE CODE (DTC) P1122
THROTTLE POSITION SENSOR INTERMITTENT LOW VOLTAGE

Circuit Description

The Throttle Position Sensor (TPS) circuit provides a voltage signal that changes relative to throttle blade angle. The TPS sends a voltage signal back to the engine control module (ECM) relative to the throttle plate opening. The voltage signal will vary from approximately 1 volt at closed throttle, to over 4.9 v at wide open throttle (WOT). The TP signal is used by the ECM for fuel control and for most of the ECM controlled outputs. The TP signal is one of the most important inputs used by the ECM for fuel control and most of the ECM controlled outputs. If the ECM detects a TP signal that is intermittently above the range of the TPS, Diagnostic Trouble Code (DTC) P1122 will be set.

Conditions for Setting the DTC

- The ignition is ON.
- TPS indicates a throttle position signal intermittently less than 0.14 volt.

Action Taken When the DTC Sets

- The Malfunction Indicator Lamp (MIL) will not illuminate.
- The ECM will store conditions which were present when the DTC set as Failure Records data only. This information will not be stored as Freeze Frame data.

Conditions for Clearing the MIL/DTC

- The history DTC P1122 will clear after 40 consecutive warm-up cycles in which the diagnostic runs without a fault.
- DTC P1122 can be cleared by using the scan tool CLEAR INFO function or by disconnecting the ECM battery feed.

Diagnostic Aids

Check for the following conditions:

- Poor connection at the ECM. Inspect harness connectors for backed-out terminals, improper mating, broken locks, improperly formed or damaged terminals, and poor terminal-to-wire connection.
- Damaged harness. Inspect the wiring harness for damage. If the harness appears OK, observe the throttle position display on the scan tool while moving connectors and wiring harnesses related to the TPS. A change in the display will indicate the location of the fault.

Reviewing the Fail Records vehicle mileage since the diagnostic test last failed may help determine how often the condition that caused the DTC to be set occurs. This may assist in diagnosing the condition.

Test Description

Number(s) below refer to the step number(s) on the Diagnostic Table.

1. The On-Board Diagnostic (OBD) System Check prompts the technician to complete some basic checks and store the freeze frame and failure records data on the scan tool if applicable. This creates an electronic copy of the data taken when the malfunction occurred. The information is then stored on the scan tool for later reference.

DTC P1122 Throttle Position Sensor Intermittent Low Voltage

Step	Action	Value(s)	Yes	No
1	Perform an On-Board Diagnostic (OBD) System Check. Is the system check complete?	-	Go to *Step 2*	Go to "On-Board Diagnostic System Check"
2	1. Turn the ignition ON. 2. Install the scan tool. Is Diagnostic Trouble Code (DTC) P0122 also set?	-	Go to applicable DTC table	Go to *Step 3*
3	Check for a poor 5 volt reference circuit terminal A connection at the Throttle Position Sensor (TPS). Is a problem found?	-	Go to *Step 9*	Go to *Step 5*
4	Check the TP signal circuit between the TPS connector and the engine control module (ECM) for an intermittent open or short to ground. Is a problem found?	-	Go to *Step 8*	Go to *Step 6*
5	Check for a poor 5 volt reference circuit terminal A1 connection at the ECM. Is a problem found?	-	Go to *Step 7*	Go to *Step 6*
6	Check for an intermittent open or a faulty splice in the 5 volt reference circuit. Is a problem found?	-	Go to *Step 18*	Go to "Diagnostic Aids"
7	Replace the faulty harness connector terminal for the 5 volt reference circuit and/or the TP signal circuit as necessary. Is the repair complete?	-	Go to *Step 9*	-
8	Repair the intermittent open/short circuit in wiring harness as necessary. Is the repair complete?	-	Go to *Step 9*	-
9	1. Using the scan tool, clear the DTCs. 2. Start the engine and idle at normal operating temperature. 3. Operate the vehicle within the conditions for setting this DTC as specified in the supporting text. Does the scan tool indicate that this diagnostic ran and passed?	-	Go to *Step 10*	Go to *Step 2*
10	Check if any additional DTCs are set. Are any DTCs displayed that have not been diagnosed?	-	Go to applicable DTC table	System OK

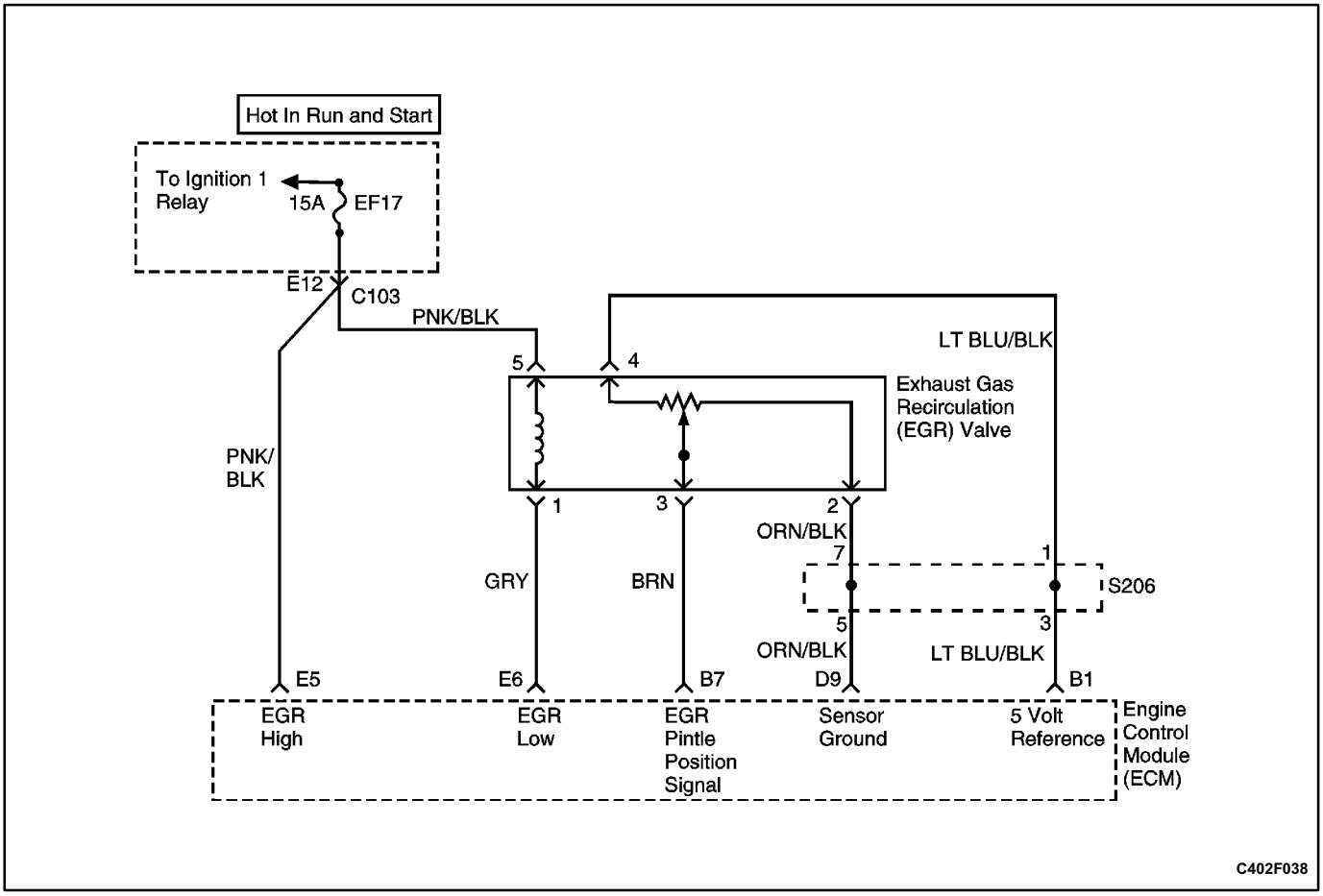

DIAGNOSTIC TROUBLE CODE (DTC) P1404
EXHAUST GAS RECIRCULATION CLOSED VALVE PINTLE ERROR

Circuit Description

An Exhaust Gas Recirculation (EGR) system is used to lower Oxides of Nitrogen (NOx) emission levels caused by high combustion temperatures. It accomplishes this by feeding small amounts of exhaust gases back into the combustion chamber. When the air/fuel mixture is diluted with the exhaust gases, combustion temperatures are reduced.

A linear EGR valve is used on this system. The linear EGR valve is designed to accurately supply exhaust gases to the engine without the use of intake manifold vacuum. The valve controls exhaust flow going into the intake manifold from the exhaust manifold through an orifice with an engine control module (ECM) controlled pintle. The ECM controls the pintle position using inputs from the Throttle Position (TP) and Manifold Absolute Pressure (MAP) sensors. The ECM then commands the EGR valve to operate when necessary by controlling an ignition signal through the ECM. This can be monitored on a scan tool as the Desired EGR Position.

The ECM monitors the results of its command through a feedback signal. By sending a 5 volt reference and a ground to the EGR valve, a voltage signal representing the EGR valve pintle position is sent to the ECM. This feedback signal can also be monitored on a scan tool and is the actual position of the EGR pintle. The Actual EGR Position should always be near the commanded or Desired EGR Position.

Conditions for Setting the DTC

- Engine running.
- Ignition voltage is between 11 and 16 volts.
- Desired EGR position is equal to 0.
- Difference between current and learned low position is greater than 16 A/D counts.
- Failed conditions exist for more than 6.3 seconds for 3 EGR cycles each separated by 5 seconds at the desired position of greater than or equal to 30%.
- Coolant temperature is greater than 2°C (35.6°F).

Action Taken When the DTC Sets

- The Malfunction Indicator Lamp (MIL) will illuminate after two consecutive ignition cycles in which the diagnostic runs with the fault active.
- The ECM will record operating conditions at the time the diagnostic fails. This information will be stored in the Freeze Frame and Failure Records buffers.
- A history Diagnostic Trouble Code (DTC) is stored.
- Coolant fan turns on.
- EGR is disabled.

Conditions for Clearing the MIL/DTC

- The MIL will turn off after three consecutive ignition cycles in which the diagnostic runs without a fault.
- A history DTC will clear after 40 consecutive warmup cycles without a fault.
- DTC(s) can be cleared by using the scan tool.

Diagnostic Aids

Due to moisture associated with exhaust systems, the EGR valve may freeze and stick in cold weather. After the vehicle is brought into a warm shop for repairs, the valve warms and the problem disappears. By watching the Actual EGR and Desired EGR Positions on a cold vehicle with a scan tool, the fault can be easily verified. Check the freeze frame data to determine if the DTC set when the vehicle was cold by viewing the Engine Coolant Temperature (CTS).

Test Description

Number(s) below refer to the step number(s) on the Diagnostic Table.

1. The OnBoard Diagnostic (OBD) System Check prompts the technician to complete some basic checks and store the freeze frame and failure records data on the scan tool if applicable. This creates an electronic copy of the data taken when the malfunction occurred. The information is then stored on the scan tool for later reference.
2. Commanding the EGR valve open determines whether the EGR system can control the EGR valve accurately and if the fault is present.
3. When the EGR valve electrical connector is disconnected, the scan tool should display the Actual EGR Position as 0%. If it does not, the fault lies either in the EGR signal circuit or the ECM.
5. If the ERG valve 5 volt reference is shorted to voltage, the digital voltmeter (DVM) will read battery voltage and additional DTCs may be set and engine performance will be poor.
6. The replacement ECM must be reprogrammed. Refer to the latest Techline procedure for ECM reprogramming.
10. An open or poor connection condition may have caused this DTC to set. Be sure to check the terminals for being backed out, improperly formed or damaged, and for poor tension.
11. All circuits to the EGR valve are OK at this point. The fault lies internally in the EGR valve and therefore must be replaced. Be sure all gasket material is removed from the EGR mounting surface. Even a small amount of material may cause a DTC P0401 to set.
12. Check the terminals for being backed out, improperly formed or damaged, and for poor tension.
13. Clearing DTCs is a very important step for this diagnostic. The clearing function allows the EGR valve to relearn a new pintle position as the old pintle position was inaccurate due to the failure that caused the DTC. The DTC must be cleared with the ignition ON, engine OFF or when the engine is idling. If the ECM sees a EGR command, the new pintle will not be learned.
14. If no malfunctions have been found at this point and no additional DTCs were set, refer to "Diagnostic Aids" in this section for additional checks and information.

DTC P1404 Exhaust Gas Recirculation Closed Valve Pintle Error

Step	Action	Value(s)	Yes	No
1	Perform an On-Board Diagnostic (OBD) System Check. Is the system check complete?	-	Go to *Step 2*	Go to "On-Board Diagnostic System Check"
2	1. Turn the ignition switch ON with the engine OFF. 2. Install a scan tool. 3. Command the Exhaust Gas Recirculation (EGR) valve to the specified values. Does the Actual EGR Position follow the Desired EGR Position?	25%, 50%, 75%, 100%	Go to *Step 13*	Go to *Step 3*
3	Disconnect the EGR valve electrical connector. Is the Actual EGR Position near the specified value?	100%	Go to *Step 4*	Go to *Step 5*
4	Check the signal circuit terminal 3 for a short to voltage and repair as necessary. Is a repair necessary?	-	Go to *Step 13*	Go to *Step 6*
5	With a digital voltmeter (DVM) connected to ground, probe the 5 volt reference circuit terminal 4 to the EGR valve. Does the DVM read near the specified value?	5 V	Go to *Step 7*	Go to *Step 8*
6	Replace the engine control module (ECM). Is the action complete?	-	Go to *Step 13*	-
7	1. Connect a test light to ground. 2. Probe the EGR control circuit to the EGR valve. Does the test light illuminate?	-	Go to *Step 9*	Go to *Step 10*
8	Check the 5 volt reference circuit for a short to voltage and repair as necessary. Is a repair necessary?	-	Go to *Step 13*	Go to *Step 6*
9	Check the control circuit for a short to voltage and repair as necessary. Is a repair necessary?	-	Go to *Step 13*	Go to *Step 6*
10	Check the EGR sensor ground circuit for an open or poor connection at the EGR valve electrical connector and repair as necessary. Is a repair necessary.	-	Go to *Step 13*	Go to *Step 12*
11	Replace the EGR valve. Is the action complete?	-	Go to *Step 13*	-
12	Check the ECM electrical connector for a poor connection and repair as necessary. Is a repair necessary?	-	Go to *Step 13*	Go to *Step 6*
13	1. Using the scan tool, clear the Diagnostic Trouble Codes (DTCs). 2. Start the engine and idle at normal operating temperature. 3. Operate the vehicle within the conditions for setting this DTC as specified in the supporting text. Does the scan tool indicate that this diagnostic ran and passed?	-	Go to *Step 14*	Go to *Step 2*
14	Check if any additional DTCs are set. Are any DTCs displayed that have not been diagnosed?	-	Go to applicable DTC table	System OK

BLANK

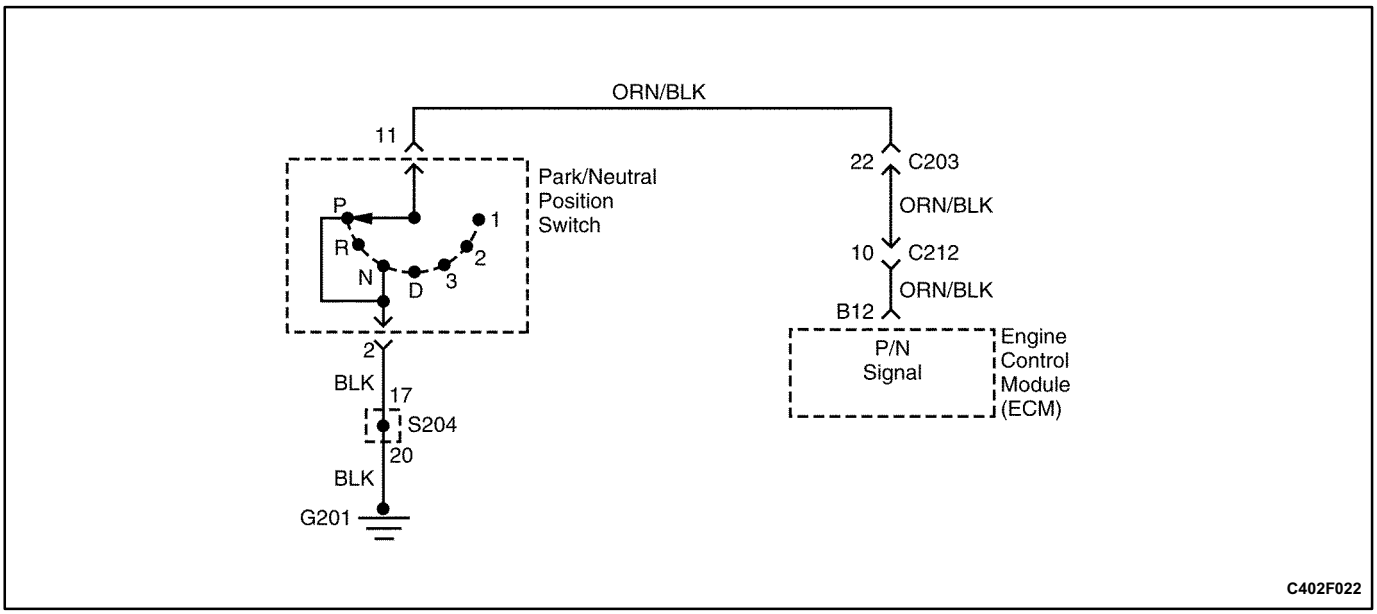

DIAGNOSTIC TROUBLE CODE (DTC) P1520 PARK/NEUTRAL DISCRETE FAULT

Circuit Description

The Park/Neutral Position (PNP) Switch contacts close the input circuit from the engine control module (ECM) to ground when the transmission range switch is in the park or neutral position. The PNP switch is open when a transaxle drive range is selected. The ECM uses the P/N position switch information to perform the following functions:

- Control idle speed using the Idle Air Control (IAC).
- Vehicle speed sensor (VSS) output.
- Speed sensor diagnostics.
- Ignition coil spark advance.

The ECM supplies 12 volts to the PNP switch signal circuit. The ECM senses a closed switch (PARK or NEUTRAL selected) when the voltage on the PNP signal switch drops below 1 volt.

Conditions for Setting the DTC

- DTCs P0106, P0107, P0108, P0121, P0122, P0123, P0336, P0337, P0502, P1106, P1121, P1122, P1336 not set.

In park (PNP Switch is on)

- Vehicle speed is greater than 48 km/h (30 mph).
- Engine speed is greater than 2000 rpm.
- Throttle position sensor is greater than 10%.
- Manifold Absolute Pressure (MAP) is greater than 45 kPa.

In gear (PNP Switch is OFF)

- Vehicle speed is greater than 3 km/h (2 mph).
- Engine speed is greater than 1100 rpm.
- Throttle position sensor is greater than 0.4%.
- MAP is greater than 40 kPa.

Action Taken When the DTC Sets

The ECM will not illuminate the Malfunction Indicator Lamp (MIL).

The ECM will store conditions which were present when the DTC set as Fail Records data only. This information will be not stored as Freeze Frame data.

Conditions for Clearing the MIL/DTC

A history DTC P1520 will clear after 40 consecutive warmup cycles have occurred without a fault.

DTC P1520 can be cleared by using the scan tool or disconnecting the ECM.

Diagnostic Aids

An intermittent may be caused by a poor wire connection, rubbed through wire insulation or a wire broken inside the insulation. Check for the following conditions:

- Misadjusted PNP switch.
- Poor connection with the ECM harness and connectors for improper mating, broken locks, improperly formed or damaged terminals, and poor terminal to wire connection.
- Damaged wiring harnesses.

Reviewing the Fail Records vehicle mileage since the diagnostic test last failed may help determine how often the condition that caused the DTC to be set occurs. This may assist in diagnosing the condition.

DTC P1520 Park/Neutral Discrete Fault

Step	Action	Value(s)	Yes	No
1	Perform an On-Board Diagnostic (OBD) System Check. Is the system check complete?	-	Go to *Step 2*	Go to "On-Board Diagnostic System Check"
2	1. Place the transmission range switch in PARK 2. Disconnect connector 1 from the engine control module (ECM). 3. Turn the ignition ON. 4. Connect a digital voltmeter (DVM) from terminal B12 to ground and measure the resistance of the Park/Neutral position (PNP) signal circuit. Is the resistance near the specified value?	0Ω	Go to *Step 5*	Go to *Step 3*
3	1. Turn the ignition OFF. 2. Disconnect the PNP switch connector. 3. Measure the resistance across the PNP switch at terminals 11 and 2. Is the resistance near the specified value?	0Ω	Go to *Step 4*	Go to *Step 6*
4	Measure the resistance of the PNP signal circuit between terminal 11 at the PNP switch connector and terminal B12 on the ECM connector. Is the resistance near the specified value?	0Ω	Go to *Step 8*	Go to *Step 7*
5	Replace the engine control module (ECM). Is the repair complete?	-	Go to *Step 9*	-
6	Replace the PNP switch. Is the repair complete?	-	Go to *Step 9*	-
7	Repair the open or short to ground in the PNP signal circuit between terminal 11 at the PNP switch connector and terminal B12 on the ECM connector. Is the repair complete?	-	Go to *Step 9*	-
8	Repair the open in the PNP signal circuit between terminal 2 at the PNP switch connector and ground. Is the repair complete?	-	Go to *Step 9*	-
9	1. Using the scan tool, clear the Diagnostic Trouble Codes (DTCs). 2. Operate the vehicle within the conditions for setting this DTC as specified in the supporting text. Does the scan tool indicate that this diagnostic ran and passed?	-	Go to *Step 10*	Go to *Step 2*
10	Check if any additional DTCs are set. Are any DTCs displayed that have not been diagnosed?	-	Go to applicable DTC table	System OK

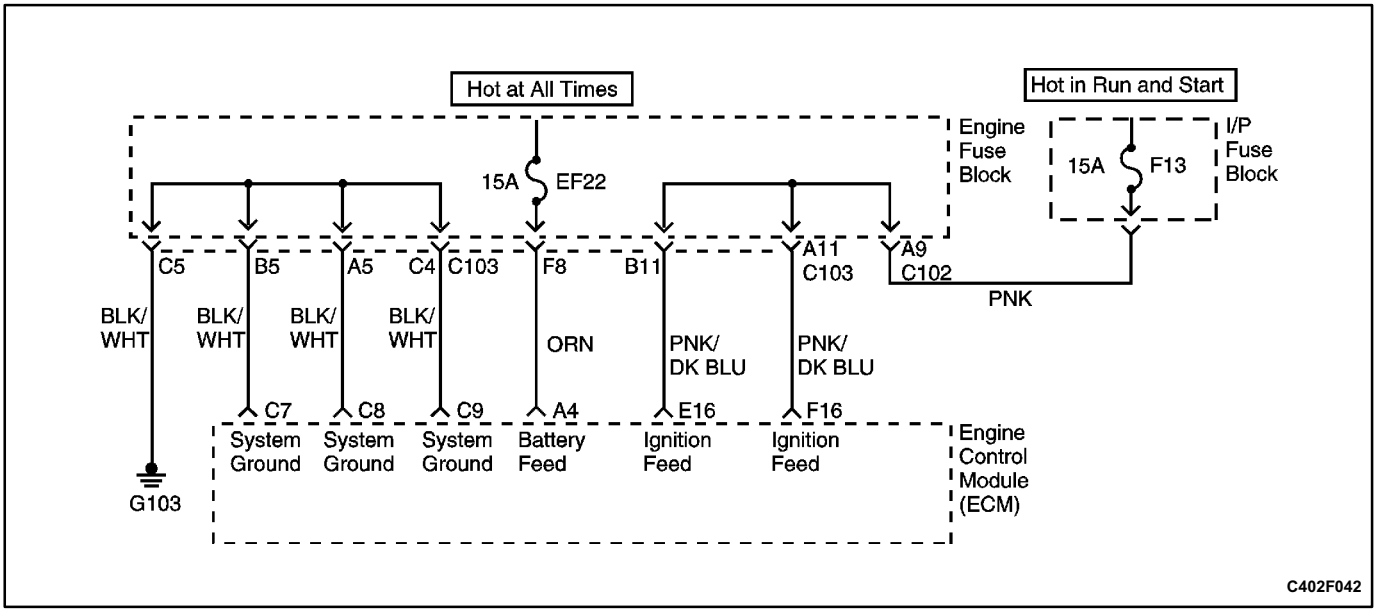

DIAGNOSTIC TROUBLE CODE (DTC) P1625
ECM INTERNAL SYSTEM RESET

Circuit Description

The engine control module (ECM) has a memory area where it stores certain data it needs to save when the ignition is OFF. This diagnostic test monitors this memory for a loss or unintended change of data. If such a condition occurs, Diagnostic Trouble Code (DTC) P1625 will set.

Conditions for Setting the DTC

- Clock reset or COP reset.
- Ignition ON.

Action Taken When the DTC Sets

- The Malfunction Indicator Lamp (MIL) will not illuminate.
- No message will be displayed.
- Clear keep alive memory locations.

Conditions for Clearing the DTC

- A history DTC will clear after 40 consecutive warmup cycles without a fault.
- DTC(s) can be cleared by using the scan tool.
- ECM battery voltage is interrupted.

Diagnostic Aids

If the battery has been disconnected for any reason DTC P1625 will set. The ECM keeps a running check on the memory. If the memory changes, it will reset. An intermittent loss of power or ground to the ECM will cause a reset.

Test Description

Number(s) below refer to the step number(s) on the Diagnostic Table.

1. The OnBoard Diagnostic (OBD) System Check prompts the technician to complete some basic checks and store the freeze frame and failure records data on the scan tool if applicable. This creates an electronic copy of the data taken when the malfunction occurred. The information is then stored on the scan tool for later reference.

DTC P1625 ECM Internal System Reset

Step	Action	Value(s)	Yes	No
1	Perform an On-Board Diagnostic (OBD) System Check. Is the check complete?	-	Go to *Step 2*	Go to "On-Board Diagnostic System Check"
2	Check the scan tool. Are any other Diagnostic Trouble Codes (DTCs) set?	-	Go to applicable DTC table	Go to *Step 3*
3	1. Start the engine and idle at normal operating temperature. 2. Operate the vehicle within the Conditions for Setting this DTC as specified in the supporting text. Does the scan tool indicate that this diagnostic ran and passed?	-	System OK	Go to *Step 4*
4	Repair the open or shorts in the battery feed, ignition feed or ground circuits. Is the repair complete?	-	System OK	-

DIAGNOSTIC TROUBLE CODE (DTC) P1640

ODM INTERNAL SPI COMMUNICATION

Circuit Description

Output Driver Modules (ODMs) are used by the engine control module (ECM) to turn on the current driven devices that are needed to control various engine functions. The ODM is capable of controlling up to 7 separate outputs by applying ground to the device which the ECM is commanding on. ODMs are capable of diagnosing each output circuit individually. This Diagnostic Trouble Code (DTC) detects a short to ground or open circuit and short to battery for the 7 lowside output devices of the ODM.

Since A/C is an option, NO A/C will cause the A/C clutch relay output to always fault. If a fault is seen on the A/C clutch relay output, it will not be logged as a fault until the A/C request input interrupts a high voltage, indicating that A/C has been installed.

Conditions for Setting the DTC

- Ignition ON.
- Ignition voltage is greater than or equal to 10 volts.
- Engine run time is greater than or equal to 5 seconds.
- DTC P1618 not set.

Action Taken When the DTC Sets

- The ECM will illuminate the Malfunction Indicator Lamp (MIL).
- The ECM will record operating conditions at the time the diagnostic fails. This information will be stored in the Freeze Frame and Failure Records buffer.
- A history DTC is stored.

Conditions for Clearing the MIL/DTC

- A history DTC P1640 will clear after 40 consecutive warmup cycles occur without a fault.
- The DTC P1640 can be cleared with a scan tool or disconnecting the ECM.

Diagnostic Aids

Check for the following conditions:

- Poor connection at the ECM - Inspect harness connectors for backedout terminals, improper mating, broken locks, improperly formed or damaged terminals, and poor terminal-to-wire connection.
- Damaged harness - Inspect the wiring harness for damage. If the harness appears to be OK, disconnect the ECM, turn the ignition ON and observe a voltmeter connected to the MIL driver circuit at the ECM harness connector while moving connectors and wiring harnesses related to the MIL. A change in voltage will indicate the location of the fault.
- Poor connection at component - Examine for damaged connectors, unplugged connectors or damaged terminals at the various ODM controlled components.

The following ECM terminals are controlled by the ODM:

- C4 - EST A
- D5 - EST B
- A15 - Evaporative Emission (EVAP) Canister Purge Control
- C13 - Cooling Fan Relay 1
- C12 - Cooling Fan Relay 2
- B14 - A/C Clutch Output

Test Description

Number(s) below refer to the step number(s) on the Diagnostic Table.

1. The On-Board Diagnostic (OBD) System Check prompts the technician to complete some basic checks and store the freeze frame and failure records data on the scan tool if applicable. This creates an electronic copy of the data taken when the malfunction occurred. The information is then stored on the scan tool for later reference.
3. Normally, ignition feed voltage is present on the output driver circuit with the ECM disconnected and the ignition turned ON.
4. Checks for a shorted component or a short B+ on the output driver circuit. Either condition would result in a measured current of over 1.5 amps. Also checks for a component that is going open while being operated, resulting in a measured current of 0 amps.
5. Checks for a fault component.
14. The replacement ECM must be reprogrammed. Refer to the latest Techline procedure for ECM reprogramming.

DTC P1640 ODM Internal SPI Communication

Step	Action	Value(s)	Yes	No
1	Perform an On-Board Diagnostic (OBD) System Check. Is the system check complete?	-	Go to *Step 2*	Go to "On-Board Diagnostic System Check"
2	1. Install the scan tool and clear the Diagnostic Trouble Code (DTC). 2. Review the Freeze Frame data with the ignition ON and the engine OFF and note the parameters. 3. Operate the vehicle within the Freeze Frame conditions as noted. Does DTC P1640 reset?	-	Go to *Step 3*	Go to "Diagnostic Aids"
3	1. Turn the ignition OFF 2. Disconnect the engine control module (ECM). 3. Turn the ignition ON. 4. Using a digital voltmeter (DVM), measure the voltage between one of the output driver circuits at the ECM harness connector and ground. Is the voltage near the specified value?	11-14 V	Go to *Step 4*	Go to *Step 7*
4	Measure the current between one of the output driver circuits and ground for at least 2 minutes. Does the current reading remain between the specified values?	0.05-1.5 amps	Go to "Diagnostic Aids"	Go to *Step 5*
5	1. Turn the ignition OFF and disconnect the ignition feed circuit. 2. Turn the ignition ON. 3. Using a DVM, measure the voltage between the output driver circuit and ground. Is the voltage at the specified value?	0 V	Go to *Step 11*	Go to *Step 6*
6	Locate and repair short to voltage in the component output driver circuit. Is the repair complete?	-	Go to *Step 15*	-
7	Check the ignition feed fuse for the component. Does the fuse need to be replaced?	-	Go to *Step 8*	Go to *Step 9*
8	1. Locate and repair the short to ground in the ignition feed circuit. 2. Replace the fuse. Is the repair complete?	-	Go to *Step 15*	-
9	1. Disconnect the ignition feed circuit. 2. With the ignition ON, measure the voltage between the ignition feed circuit and ground. Is the voltage near the specified value?	11-14 V	Go to *Step 10*	Go to *Step 13*
10	1. Check the output driver circuit for an open or short to ground. 2. If a problem is found, repair the output driver circuit. Is a problem found?	-	Go to *Step 15*	Go to *Step 11*

DTC P1640 ODM Internal SPI Communication (Cont'd)

Step	Action	Value(s)	Yes	No
11	1. Check the output driver circuit and the ignition feed circuit for a poor connection at the component and at the ECM. 2. If a problem is found, replace the faulty terminal(s). Is a problem found?	-	Go to *Step 15*	Go to "Diagnostic Aids"
12	1. Check the output driver circuit for a poor connection at the ECM 2. If a problem is found, replace the faulty terminal. Is a problem found?	-	Go to *Step 15*	Go to *Step 14*
13	Locate and repair open in the ignition feed circuit to the component. Is the repair complete?	-	Go to *Step 15*	-
14	Replace the ECM. Is the repair complete?	-	Go to *Step 15*	-
15	1. Using the scan tool, clear the DTCs. 2. Start the engine and idle at normal operating temperature. 3. Operate the vehicle within the conditions for setting this DTC as specified in the supporting text. Does the scan tool indicate that this diagnostic ran and passed?	-	Go to *Step 16*	Go to *Step 2*
16	Check if any additional DTCs are set. Are any DTCs displayed that have not been diagnosed?	-	Go to applicable DTC table	System OK

SYMPTOM DIAGNOSIS

IMPORTANT PRELIMINARY CHECKS

Important: Several symptom procedures call for a careful visual/physical inspection. Always perform the visual/physical test first. Visual inspections may lead to correcting a problem without further checks and can save valuable time.

Step	Action	Value(s)	Yes	No
1	Perform the Diagnostic System Check for 2.0L SOHC/DOHC and the On-Board Diagnostic (OBD) system check for 2.2L DOHC. Are any diagnostic trouble code(s) (DTCs) stored in the electronic control module (ECM) memory?	-	Go to Appropriate DTC Table	Go to *Step 2*
2	1. Inspect all of the ECM ground connections. 2. Inspect all of the vacuum hoses for splits, kinks, and proper connections. 3. Check for air leaks at all of the mounting areas of the intake manifold sealing surfaces. 4. Inspect the ignition wires for cracking, hardness, proper routing, and carbon tracking. 5. Inspect the wiring for proper connections, pinches, and cuts. Are all checks complete?	-	Go to Appropriate Symptom Table	-

INTERMITTENTS

Definition**:** The problem may or may not turn on the Malfunction Indicator Lamp (MIL) or store a diagnostic trouble code (DTC).

Important: Do not use the diagnostic trouble code (DTC) tables for intermittent problems. A fault must be present in order to locate the problem. If a fault is intermittent, use of diagnostic trouble code tables may result in the replacement of good parts.

Step	Action	Value(s)	Yes	No
1	Were the Important Preliminary Checks performed?	-	Go to *Step 2*	Go to „Important Preliminary Checks”
2	1. Perform a careful inspection of any suspect circuits. 2. Inspect for poor mating of the connector halves, or terminals not fully seated into the connector body. 3. Inspect for improperly formed or damaged terminals. 4. Inspect for poor terminal-to-wire connections. This requires removing the terminal from the connector body to inspect it. Are any problems present?	-	Go to *Step 3*	Go to *Step 4*
3	Repair the electrical connections as needed. Is the repair complete?	-	System OK	-
4	Road test the vehicle with a voltmeter connected to a suspected circuit or a scan tool connected to the assembly line diagnostic link (ALDL) or data link connector (DLC). Did the voltmeter or the scan tool indicate an abnormal voltage or scan reading?	-	Go to *Step 5*	Go to *Step 6*

Intermittents (Cont'd)

Step	Action	Value(s)	Yes	No
5	Replace the sensor in the affected circuit, if a diagnostic trouble code (DTC) was stored for this circuit (except for the DTCs 44 and 45) for 2.0L SOHC/DOHC and DTCs P0171 and P0172 for 2.2L DOHC. Is the repair complete?	-	System OK	-
6	Does an intermittent Malfunction Indicator Lamp (MIL) or DTC occur?	-	Go to *Step 7*	Go to *Step 8*
7	1. Check for a faulty relay, electronic control module (ECM) driven solenoid, or switch. 2. Check for improper installation of electrical devices, such as lights, two-way radios, electric motors, etc. 3. Inspect the ignition control wires for proper routing (away from ignition wires, ignition system components, and the generator). 4. Check for a short to ground in the MIL circuit or the ALDL (or DLC) „test" terminal. 5. Inspect the ECM ground connections. 6. Correct or repair the affected circuits as needed. Is the repair complete?	-	System OK	-
8	1. Check for a loss of DTC memory. 2. Disconnect the throttle position sensor. 3. Run the engine at idle until the MIL comes on. 4. Turn the ignition OFF. Is DTC 22 (or P0122) stored in memory?	-	Go to *Step 10*	Go to *Step 9*
9	Replace the electronic control module. Is the repair complete?	-	System OK	-
10	Does the vehicle stall while driving?	-	Go to *Step 11*	Go to *Step 12*
11	Monitor the oxygen sensor and the injector base pulse width with the scan tool. Does the scan tool display a steady low voltage (about 0 mv) for the oxygen sensor with the control module commanding an injector base pulse width of the value specified?	8 ms	Go to *Step 9*	Go to *Step 12*
12	1. Check for an open diode across the A/C clutch and for other open diodes. 2. Repair or replace any components as needed. Is the repair complete?	-	System OK	-

HARD START

Definition: The engine cranks OK, but does not start for a long time. The engine eventually runs or may start and immediately die.

Important: Ensure that the driver is using the correct starting procedure. Before diagnosing, check service bulletins for updates.

Step	Action	Value(s)	Yes	No
1	Were the Important Preliminary Checks performed?	-	Go to *Step 2*	Go to ``Important Preliminary Checks”
2	1. Connect the scan tool to the assembly line diagnostic link (ALDL) or data link connector (DLC). 2. Check the coolant temperature sensor (CTS) and the manifold air temperature (MAT) sensor using the scan tool. 3. Compare the coolant temperature and the manifold air temperature with the ambient temperature when the engine is cold. Does the CTS and the MAT readings differ from the ambient temperature by more than the value specified?	3°C (5°F)	Go to *Step 3*	Go to *Step 4*
3	1. Measure the resistance of the CTS and the MAT sensor. 2. Compare the resistance value to specifications using the Temperature Vs. Resistance tables for DTCs 14 and 23 (or P0118 and P0113). 3. If the resistance is not the same, replace the faulty sensor. Is the repair complete?	-	System OK	-
4	1. Check for a sticking throttle shaft or a binding linkage that may cause a high throttle position sensor (TPS) voltage. Repair or replace as needed. 2. Check the TPS voltage reading with the throttle closed. Does the voltage measure within the value specified?	0.4-0.8 V	Go to *Step 5*	Go to *Step 26*
5	1. Check the manifold absolute pressure (MAP) sensor response and accuracy. 2. Replace the MAP sensor as needed. Is the repair complete?	-	System OK	Go to *Step 6*
6	Check the fuel pump operation. Does the fuel pump operate for the specified time when the ignition switch is turned ON?	2 sec	Go to *Step 7*	Go to „Fuel Pump Relay Circuit Check”
7	Check the fuel system pressure. Is the fuel pressure within the specifications?	284-325 kPa (41-47 psi)	Go to *Step 29*	Go to *Step 8*
8	Check for water contamination in the fuel. Is fuel contaminated?	-	Go to *Step 9*	Go to *Step 10*
9	Replace the contaminated fuel. Is the repair complete?	-	System OK	-

Hard Start (Cont'd)

Step	Action	Value(s)	Yes	No
10	1. Check the fuel injector driver circuit. 2. Disconnect all of the fuel injector harness connectors at the fuel injectors. 3. Connect an injector test light between the harness terminals of each fuel injector connector. 4. Note the test light while cranking the engine. Does the test light blink at all connectors?	-	Go to *Step 13*	Go to *Step 11*
11	Check the fuel injector driver wiring harness, the connectors, and the connector terminals for the proper connections. Is the problem found?	-	Go to *Step 12*	Go to *Step 30*
12	Repair the wiring harness, the connector, or the connector terminal as needed. Is the repair complete?	-	System OK	-
13	Measure the resistance of each fuel injector. Is the fuel injector resistance within the value specified (20°C [68°F] - the resistance will increase slightly at higher temperatures)?	11.6-12.4 Ω	Go to *Step 15*	Go to *Step 14*
14	Replace any fuel injector with a resistance that is out of specifications. Is the repair complete?	-	System OK	-
15	Perform an injector balance test. Is the problem found?	-	Go to *Step 16*	Go to *Step 17*
16	Replace any restricted or leaking fuel injectors as needed. Is the repair complete?	-	System OK	-
17	1. Check for the proper ignition voltage output for each cylinder with a spark tester. 2. Inspect the spark plugs for cracks, wear, improper gap, burned electrodes, or heavy deposits. 3. Inspect the ignition wires for short conditions. 4. Inspect all of the ignition grounds for loose connections. 5. Inspect the electronic control module (ECM) for the proper operation. Is the problem found?	-	Go to *Step 18*	Go to *Step 19*
18	Correct or replace any faulty ignition components. Is the repair complete?	-	System OK	-
19	Does the engine misfire or cut out under load or at idle?	-	Go to „Ignition System Check”	Go to *Step 20*
20	Does the engine start, but then immediately stall?	-	Go to *Step 21*	Go to *Step 23*
21	1. Remove the crankshaft position sensor (CPS). 2. Inspect for faulty connections and repair as needed. Is the problem found?	-	Go to *Step 22*	Go to *Step 25*
22	Repair the faulty connections as needed. Is the repair complete?	-	System OK	-

Hard Start (Cont'd)

Step	Action	Value(s)	Yes	No
23	1. Check for the proper valve timing. 2. Check the cylinder compression. 3. Inspect the pushrods, the rocker arms, the valve springs, and the camshaft lobes for excessive wear. 4. Inspect the intake manifold and the exhaust manifold passages for casting flash. Is the problem found?	-	Go to *Step 24*	Go to *Step 25*
24	Repair or replace any components as needed. Is the repair complete?	-	System OK	-
25	Check the idle air control valve operation. Repair or replace components as needed. Is the repair complete?	-	System OK	-
26	Check the base idle setting of the throttle body. Is the base idle setting properly adjusted?	-	Go to *Step 27*	Go to *Step 28*
27	Check the throttle position sensor circuit for proper operation. Repair or replace components as needed. Is the repair complete?	-	System OK	-
28	Adjust the base idle setting to specifications. Is the repair complete?	-	System OK	-
29	Repair the fuel system as needed. Is the repair complete?	-	System OK	-
30	Replace the electronic control module. Is the repair complete?	-	System OK	-

SURGES OR CHUGGLES

Definition: Engine power variation under steady throttle or cruise. Feels like the vehicle speeds up and slows down with no change in the accelerator pedal position.

Important: Make sure the driver understands torque converter clutch (TCC) and A/C compressor operation as described in the owner's manual.

The speedometer reading and the speed reading on the scan tool should be equal.

Before diagnosing the symptom, check service bulletins for updates.

Step	Action	Value(s)	Yes	No
1	Were the Important Preliminary Checks performed?	-	Go to *Step 2*	Go to „Important Preliminary Checks”
2	Connect the scan tool to the assembly line diagnostic link (ALDL). Does the oxygen (O_2) sensor (or O2S1) respond quickly to different throttle positions?	-	Go to *Step 4*	Go to *Step 3*
3	1. Check the O_2 (or O2S1) sensor for silicone or other contaminants from fuel or use of improper room temperature vulcanizing (RTV) sealant. 2. Replace the contaminated O_2 sensor (or O2S1) . Is the repair complete?	-	System OK	-

Surges or Chuggles (Cont'd)

Step	Action	Value(s)	Yes	No
4	1. Drive the vehicle at the speed of the complaint. 2. Monitor the long term fuel trim reading using the scan tool. Is the long term fuel trim reading within the value specified?	115-150 counts	Go to *Step 7*	Go to *Step 5*
5	Is the long term fuel trim reading below the value specified?	115 counts	Go to „Diagnostic Aids for DTC 45”	Go to *Step 6*
6	Is the long term fuel trim reading above the value specified?	150 counts	Go to „Diagnostic Aids for DTC 44”	-
7	Check the fuel system pressure while the condition exists. Is the fuel system pressure within specifications?	284-325 kPa (41-47 psi)	Go to *Step 8*	Go to *Step 17*
8	Check the in line fuel filter. Is the filter dirty or plugged?	-	Go to *Step 18*	Go to *Step 9*
9	Perform an injector balance test. Did the injector balance test pinpoint the problem?	-	Go to *Step 19*	Go to *Step 10*
10	1. Check for proper ignition voltage output using a spark tester. 2. Inspect the spark plugs for cracks, wear, improper gap, burned electrodes, or heavy deposits. Is the problem found?	-	Go to *Step* 11	Go to *Step 12*
11	Repair or replace any ignition system components as needed. Is the repair complete?	-	System OK	-
12	1. Inspect the electronic control module grounds for being clean, tight, and in their proper locations. 2. Inspect the vacuum lines for kinks or leaks. Is the problem found?	-	Go to *Step* 13	Go to *Step 14*
13	Repair the electrical connections or the vacuum lines as needed. Is the repair complete?	-	System OK	-
14	Check the generator output voltage. Is the generator voltage within the value specified?	12-16 V	Go to *Step 16*	Go to *Step 15*
15	Repair the generator. Is the repair complete?	-	System OK	-
16	1. Check for intermittent exhaust gas recirculation (EGR) valve operation. 2. Check torque converter clutch (TCC) operation. 3. Repair or replace any components as needed. Is the repair complete?	-	System OK	-
17	Repair the fuel system as needed. Is the repair complete?	-	System OK	-
18	Replace the fuel filter. Is the repair complete?	-	System OK	-
19	Replace the leaking or restricted fuel injectors. Is the repair complete?	-	System OK	-

LACK OF POWER, SLUGGISHNESS, OR SPONGINESS

Definition: The engine delivers less than expected power. There is little or no increase in speed when the accelerator pedal is partially applied.

Step	Action	Value(s)	Yes	No
1	Were the Important Preliminary Checks performed?	-	Go to *Step 2*	Go to „Important Preliminary Checks”
2	1. Verify the customer's complaint. 2. Compare the performance of the customer's vehicle with a similar unit. Does the problem exist?	-	Go to *Step 3*	System OK
3	1. Inspect the air filter for excessive contamination. 2. Replace the air filter as needed. 3. Check the transaxle shift pattern and down shift operation. Does the transaxle operate properly?	-	Go to *Step 4*	Go to *Step 5*
4	Check the fuel system pressure. Is the fuel system pressure within specifications?	284-325 kPa (41-47 psi)	Go to *Step 7*	Go to *Step 6*
5	Repair the transaxle as needed. Is the repair complete?	-	System OK	-
6	Repair the fuel system as needed. Is the repair complete?	-	System OK	-
7	Check for a restricted fuel filter or contaminated fuel. Is the problem found?	-	Go to *Step 8*	Go to *Step 9*
8	Repair or replace any components as needed. Is the repair complete?	-	System OK	-
9	1. Check the ignition system output for all of the cylinders using a spark tester. 2. Check for proper ignition control operation. Is the ignition system operating properly?	-	Go to *Step 10*	Go to *Step 11*
10	1. With the engine at normal operating temperature, connect a vacuum gauge to a vacuum port on the intake manifold. 2. Operate the engine at 1000 rpm. 3. Record the vacuum reading. 4. Increase the engine speed to 2500 rpm. 5. Note the vacuum reading at a steady 2500 rpm. Does the vacuum decrease more than the value specified?	10 kPa (3 in. Hg)	Go to *Step 12*	Go to *Step 15*
11	Repair or replace any ignition system components as needed. Is the repair complete?	-	System OK	-
12	Inspect the exhaust system for restrictions and damaged or collapsed pipes. Is the problem found?	-	Go to *Step 13*	Go to *Step 14*
13	Repair or replace any components as needed. Is the repair complete?	-	System OK	-
14	1. Check the cylinder compression and valve timing. 2. Inspect the camshaft for excessive wear. Is the problem found?	-	Go to *Step 15*	Go to *Step 16*

Lack of Power, Sluggishness, or Sponginess (Cont'd)

Step	Action	Value(s)	Yes	No
15	Repair or replace any engine components as needed. Is the repair complete?	-	System OK	-
16	1. Check the electronic control module grounds for being clean, tight, and in their proper location. 2. Check the exhaust recirculation valve for being open or partially open all the time. 3. Check the torque converter clutch operation. 4. Check the A/C system operation. 5. Check the generator output. 6. Repair the generator if the output is not within the specified range. Are all checks and repairs complete?	12-16 V	System OK	-

DETONATION/SPARK KNOCK

Step	Action	Value(s)	Yes	No
1	Were the Important Preliminary Checks performed?	-	Go to *Step 2*	Go to „Important Preliminary Checks”
2	1. Fill the fuel tank with a known good grade of gasoline that has the octane rating of the value specified. 2. Reevaluate the vehicle's performance. Does the detonation problem still exist?	87-89 octane	Go to *Step 3*	System OK
3	1. Inspect for low engine coolant. 2. Check for restricted air flow to the radiator or restricted coolant flow. 3. Check for a faulty thermostat. 4. Check for an incorrect coolant solution. Is the problem found?	-	Go to *Step 4*	Go to *Step* 5
4	Repair or replace any cooling system components as needed. Is the repair complete?	-	System OK	-
5	1. Check the voltage using the scan tool. 2. Replace the CTS if the resistance is not within specifications as listed in the Diagnostic Aids for diagnostic trouble code 14 (or P0118). Is the problem found?	-	Go to *Step 6*	Go to *Step* 7
6	Replace the CTS or repair the circuit as needed. Is the repair complete?	-	System OK	-
7	1. Check the ignition system output with a spark tester. 2. Inspect the spark plugs for the proper heat range and gap. 3. Check for the proper operation of the ignition controls. Is the ignition system operating properly?	-	Go to *Step 9*	Go to *Step 8*

Detonation/Spark Knock (Cont'd)

Step	Action	Value(s)	Yes	No
8	Repair or replace the ignition system components as needed. Is the repair complete?	-	System OK	-
9	1. Connect the scan tool to the assembly line diagnostic link (ALDL) or data link connector (DLC). 2. Road test the vehicle at the speed of the complaint. 3. Monitor the long term fuel trim reading from the scanner data stream. Is the long term fuel trim reading above the value specified?	150 counts	Go to „Diagnostic Aids for DTC 44„	Go to *Step 10*
10	Check the fuel system pressure. Is the problem found?	284-325 kPa (41-47 psi)	Go to *Step 11*	Go to *Step 12*
11	Repair or replace the fuel system components as needed. Is the repair complete?	-	System OK	-
12	1. Inspect for carbon buildup inside the engine. 2. Remove the carbon with a top engine cleaner. Follow the instructions supplied with the product. 3. Check the basic engine parts such as the camshaft, the cylinder head, the pistons, etc. for excessive wear. 4. Replace any excessively worn parts. Is the procedure complete?	-	Go to *Step 13*	-
13	1. Check the exhaust gas recirculation valve for proper operation. 2. Check the air intake system for proper operation. 3. Check the torque converter clutch operation and transaxle shift points. 4. Check the service bulletins for programmable read-only memory (PROM) updates. 5. Check the cylinder compression. 6. Repair or replace any faulty components. Are all checks and repairs complete?	-	System OK	-

HESITATION, SAG, STUMBLE

Definition: Momentary lack of response as the accelerator is pushed down. This can occur at any vehicle speed. It is usually the most severe when first trying to make the vehicle move, as from a stop. Hesitation, sag, or stumble may cause the engine to stall if severe enough.

Important: Before diagnosing this condition, check service bulletins for PROM updates.

Step	Action	Value(s)	Yes	No
1	Were the Important Preliminary Checks performed?	-	Go to *Step 2*	Go to „Important Preliminary Checks”
2	1. Check the fuel system pressure. If the pressure is not within the value specified, service the fuel system as needed. 2. Inspect the throttle position sensor (TPS) for binding or sticking. The TPS voltage should increase at a steady rate as the throttle is moved toward wide open throttle (WOT). Is the problem found?	284-325 kPa (41-47 psi)	Go to *Step 3*	Go to *Step 4*
3	Repair or replace any components as needed. Is the repair complete?	-	System OK	-
4	1. Check the manifold absolute pressure (MAP) sensor response and accuracy. 2. Inspect the fuel for water contamination. 3. Check the canister purge system for proper operation. Is the problem found?	-	Go to *Step 5*	Go to *Step 6*
5	Repair or replace any components as needed. Is the repair complete?	-	System OK	-
6	1. Disconnect all of the fuel injector harness connectors. 2. Connect an injector test light between the harness terminals of each fuel injector. 3. Note the test light while cranking the engine. Does the test light blink on all connectors?	-	Go to *Step 8*	Go to Step 7
7	1. Repair or replace the faulty fuel injector drive harness, the connector, or the connector terminal. 2. If the connections and the harnesses are good, replace the electronic control module (ECM) for an internal open in the fuel injector driver circuit. Is the repair complete?	-	System OK	-
8	Measure the resistance of each fuel injector. Is the fuel injector resistance within the value specified (the resistance will increase slightly at higher temperatures)?	11.6-12.4 Ω	Go to *Step 10*	Go to *Step 9*
9	Replace any of the fuel injectors with a resistance that is out of specifications. Is the repair complete?	-	System OK	-
10	Perform an injector balance test. Is the problem found?	-	Go to *Step* 11	Go to *Step 12*
11	Replace any restricted or leaking fuel injectors. Is the repair complete?	-	System OK	-

Hesitation, Sag, Stumble (Cont'd)

Step	Action	Value(s)	Yes	No
12	Check the fuel system pressure after a cold start or during moderate or full throttle acceleration. Is the fuel pressure within specifications?	284-325 kPa (41-47 psi)	Go to *Step 14*	Go to *Step 13*
13	Repair the restriction in the fuel system or replace the faulty fuel pump. Is the repair complete?	-	System OK	-
14	1. Check for faulty ignition wires. 2. Inspect for fouled spark plugs. 3. Check the ignition system output on each cylinder with a spark tester. Is the problem found?	-	Go to *Step 15*	Go to *Step 16*
15	Repair or replace any ignition components as needed. Is the repair complete?	-	System OK	-
16	1. Check the generator output voltage. 2. Repair or replace the generator if the generator output is less than the value specified. 3. Check the exhaust gas recirculation (EGR) valve operation. Are all checks and needed repairs complete?	12-16 V	System OK	-

CUTS OUT, MISSES

Definition: Steady pulsation or jerking that follows engine speed, usually more pronounced as engine load increases. The exhaust has a steady spitting sound at idle or low speed.

Step	Action	Value(s)	Yes	No
1	Were the Important Preliminary Checks performed?	-	Go to *Step 2*	Go to „Important Preliminary Checks”
2	Check the ignition system output voltage for all of the cylinders using a spark tester. Is spark present on all of the cylinders?	-	Go to *Step 3*	Go to „Ignition System Check”
3	1. Inspect the spark plugs for excessive wear, insulation cracks, improper gap, or heavy deposits. 2. Check the resistance of the ignition wires. Replace any ignition wires that have a resistance greater than the value specified. Is the problem found?	30,000 Ω	Go to *Step 4*	Go to *Step 5*
4	Repair or replace any components as needed. Is the repair complete?	-	System OK	-
5	With the engine running, spray the ignition wires with a fine water mist to check for arcing and shorting to ground. Is the problem found?	-	Go to *Step 6*	Go to *Step 7*
6	Replace the ignition wires. Is the repair complete?	-	System OK	-

Cuts Out, Misses (Cont'd)

Step	Action	Value(s)	Yes	No
7	1. Perform a cylinder compression test. 2. If the compression is low, repair the engine as needed. 3. Inspect for proper valve timing, bent pushrods, worn rocker arms, broken or weak valve springs, and worn camshaft lobes. 4. Inspect the intake manifold and the exhaust manifold passages for casting flash. Is the problem found?	-	Go to *Step 8*	Go to *Step 9*
8	Repair or replace any components as needed. Is the repair complete?	-	System OK	-
9	1. Check the fuel system for a plugged inline fuel filter. 2. Check the fuel system for low fuel pressure. If the fuel pressure is below the value specified, service the fuel system as needed. 3. Inspect for contaminated fuel. Is the problem found?	284-325 kPa (41-47 psi)	Go to *Step 10*	Go to *Step 11*
10	Repair or replace any components as needed. Is the repair complete?	-	System OK	-
11	1. Disconnect all of the fuel injector harness connectors at the fuel injectors. 2. Connect an injector test light to the harness terminals of each fuel injector connector. 3. Note the test light while cranking the engine for each fuel injector. Does the test light blink for all of the fuel injectors?	-	Go to *Step 13*	Go to *Step 12*
12	1. Repair or replace the faulty injector drive circuit harness, the connector, or the connector terminal. 2. If the harness, the connectors, and the terminals are OK, replace the electronic control module (ECM). Is the repair complete?	-	System OK	-
13	Measure the resistance of each fuel injector. Is the injector resistance within the value specified (the resistance will increase slightly at higher temperatures)?	11.6-12.4 Ω	Go to *Step 15*	Go to *Step 14*
14	Replace any fuel injectors with a resistance that is out of specifications. Is the repair complete?	-	System OK	-
15	Perform an injector balance test. Is the problem found?	-	Go to *Step 16*	Go to *Step 17*
16	Replace any restricted or leaking fuel injectors. Is the repair complete?	-	System OK	-
17	1. Check for electromagnetic interference. 2. Monitor the engine rpm with a scan tool. Does the scan tool rpm change greatly with little change in actual engine rpm?	-	Go to *Step 18*	-
18	1. Inspect the routing of the ignition wires. 2. Inspect all of the ignition system grounds. 3. Correct the routing or repair the ground connections as needed. Are all checks and needed repairs complete?	-	System OK	-

POOR FUEL ECONOMY

Definition: Fuel economy, as measured by an actual road test, is noticeably lower than expected. Also, fuel economy is noticeably lower than it was on this vehicle at one time, as previously shown by an actual road test.

Important: Driving habits affect fuel economy. Check the owner's driving habits by asking the following questions:

1. Is the A/C system (i.e. defroster mode) turned on all the time?
2. Are the tires at the correct air pressure?
3. Have excessively heavy loads been carried?
4. Does the driver accelerate too much and too often? Suggest the driver read the section in the owner's manual about fuel economy.

Step	Action	Value(s)	Yes	No
1	Were the Important Preliminary Checks performed?	-	Go to *Step 2*	Go to „Important Preliminary Checks”
2	1. Inspect the air filter for excessive contamination. 2. Inspect for fuel system leaks. Are all needed checks complete?	-	Go to *Step 3*	-
3	1. Inspect the spark plugs for excessive wear, insulation cracks, improper gap, or heavy deposits. 2. Replace any faulty spark plugs. 3. Inspect the ignition wires for cracking, hardness, and proper connections. Are all needed checks and repairs complete?	-	Go to *Step 4*	-
4	1. Inspect the engine coolant level. 2. Check the thermostat for being always open or for an incorrect heat range. 3. Replace the thermostat as needed. Are all needed checks and repairs complete?	-	Go to *Step 5*	-
5	1. Check the transaxle shift pattern. Ensure all transaxle gears are functioning. 2. Check the torque converter clutch (TCC) operation with a scan tool. The scan tool should indicate rpm drop when the TCC is commanded on. 3. Check for proper calibration of the speedometer. 4. Check the brakes for dragging. 5. Check the cylinder compression. 6. Repair, replace, or adjust any components as needed. Are all checks and needed repairs complete?	-	System OK	-

ROUGH, UNSTABLE, OR INCORRECT IDLE, STALLING

Definition: The engine runs unevenly at idle. If the condition is bad enough, the vehicle may shake. Also, the idle varies in rpm (called „hunting"). Either condition may be severe enough to cause stalling. The engine idles at incorrect idle speed.

Important: Before diagnosing the symptom, check service bulletins for updates.

Step	Action	Value(s)	Yes	No
1	Were the Important Preliminary Checks performed?	-	Go to *Step 2*	Go to „Important Preliminary Checks"
2	1. Connect the scan tool to the assembly line diagnostic link (ALDL) or data link connector (DLC). 2. Monitor the oxygen (O_2) sensor or (O2S1) reading at different throttle positions. Does the O_2 sensor (O2S1) change quickly from rich to lean at the different throttle positions?	-	Go to *Step 5*	Go to *Step 3*
3	Check the O_2 (O2S1) sensor for contamination from fuel or improper use of RTV sealant. Is the O_2 (O2S1) sensor contaminated?	-	*Go to Step 4*	Go to *Step 5*
4	Replace the contaminated O_2 (O2S1) sensor as needed. Is the repair complete?	-	System OK	-
5	1. Check for a sticking throttle shaft or binding throttle linkage that may cause incorrect throttle position sensor (TPS) voltage. 2. Check the TPS voltage reading with the throttle closed. Is the TPS voltage within the value specified?	0.4-0.8 V	Go to *Step 6*	Go to „Diagnostic Aids for DTC 21„
6	1. Check the coolant temperature sensor (CTS) voltage reading using the scan tool. 2. Compare the CTS reading with the ambient temperature when the engine is cold. Does the CTS temperature reading differ from the ambient temperature by more than the value specified?	3°C (5°F)	Go to *Step 7*	Go to *Step 9*
7	Check for high resistance in the CTS circuit or the sensor itself. Is the problem found?	-	Go to *Step* 8	Go to *Step 9*
8	Replace the CTS or repair the circuit as needed. Is the repair complete?	-	System OK	-
9	Check the manifold absolute pressure (MAP) sensor for response and accuracy. Is the problem found?	-	Go to *Step 10*	Go to *Step 11*
10	Replace the MAP sensor or repair the MAP sensor circuit as needed. Is the repair complete?	-	System OK	-
11	1. Road test the vehicle at the speed of the complaint. 2. Monitor the fuel trim reading using the scan tool. Is the fuel trim reading within the value specified?	115-150 counts	Go to *Step 14*	Go to *Step 12*
12	Is the fuel trim reading below the value specified?	115 counts	Go to „Diagnostic Aids for DTC 45 or DTC P0172"	Go to *Step 13*

Rough, Unstable, or Incorrect Idle, Stalling (Cont'd)

Step	Action	Value(s)	Yes	No
13	Is the fuel trim reading above the value specified?	150 counts	Go to „Diagnostic Aids for DTC 44 or DTC P0172”	-
14	1. Disconnect all of the fuel injector harness connectors at the fuel injectors. 2. Connect an injector test light between the harness terminals of each fuel injector connector. 3. Note the test light while cranking the engine. Does the test light blink for all of the fuel injectors?	-	Go to *Step 16*	Go to *Step 15*
15	1. Repair or replace the faulty injector drive circuit harness, the connector, or the connector terminals as needed. 2. If the harness, the connectors, and the terminals are OK, replace the electronic control module (ECM). Is the repair complete?	-	System OK	-
16	Measure the resistance of each of the fuel injectors. Is the resistance within the value specified (the resistance will increase slightly at higher temperatures)?	11.6-12.4 Ω	Go to *Step 18*	Go to *Step 17*
17	Replace any fuel injectors with a resistance that is out of specifications. Is the repair complete?	-	System OK	-
18	Perform an injector balance test. Is the problem found?	-	Go to *Step 19*	Go to *Step 20*
19	Replace any leaking or restricted fuel injectors. Is the repair complete?	-	System OK	-
20	1. With the engine OFF, disconnect the fuel pressure regulator vacuum hose. 2. Thoroughly inspect the fuel pressure regulator vacuum port and the fuel pressure regulator vacuum hose for the presence of fuel. Is the problem found?	-	Go to *Step 21*	Go to *Step 22*
21	Replace the fuel pressure regulator as needed. Is the repair complete?	-	System OK	-
22	1. Check the ignition system output voltage for all of the cylinders using a spark tester. 2. Inspect the spark plugs for excessive wear, insulation cracks, improper gap, or heavy deposits. 3. Inspect the ignition wires for cracking, hardness, or improper connections. 4. Replace any ignition wires with a resistance over the value specified. Is the problem found?	30,000 Ω	Go to *Step 23*	Go to *Step 24*
23	Repair or replace any ignition system components as needed. Is the repair complete?	-	System OK	-
24	1. Inspect for vacuum leaks. 2. Check for proper positive crankcase ventilation (PCV) operation. 3. Check the idle air control (IAC) valve operation. 4. Inspect the ECM ground connections. Is the problem found?	-	Go to *Step 25*	Go to *Step 26*

Rough, Unstable, or Incorrect Idle, Stalling (Cont'd)

Step	Action	Value(s)	Yes	No
25	Repair or replace any components as needed. Is the repair complete?	-	System OK	-
26	1. Check the exhaust gas recirculation (EGR) valve for proper operation. 2. Inspect the battery cables and the ground straps for proper connections. 3. Check the generator voltage output. Repair or replace the generator if the voltage output is not within the value specified. Is the problem found?	12-16 V	Go to *Step 27*	Go to *Step 28*
27	Repair or replace any components as needed. Is the repair complete?	-	System OK	-
28	1. Inspect for broken engine mounts. 2. Check for proper valve timing. 3. Perform a cylinder compression test. 4. Inspect for bent pushrods, worn rocker arms, broken or weak valve springs, and a worn camshaft. 5. Perform repairs as needed. Are all of the checks and needed repairs complete?	-	System OK	-

EXCESSIVE EXHAUST EMISSIONS OR ODORS

Definition: A vehicle fails an emission test. The vehicle has an excessive rotten egg smell. Excessive odors do not necessarily indicate excessive emissions.

Step	Action	Value(s)	Yes	No
1	Were the Important Preliminary Checks performed?	-	Go to *Step 2*	Go to „Important Preliminary Checks”
2	1. Run the engine until it reaches operating temperature. 2. Perform an emission test. Did the vehicle pass the emission test?	-	System OK	Go to *Step 3*
3	1. Connect the scan tool to the assembly line diagnostic link (ALDL) or data link connector (DLC). 2. Road test the vehicle. 3. Monitor the long term fuel trim memory. Is the long term fuel trim memory within the value specified?	115-150 counts	Go to *Step 6*	Go to *Step 4*
4	Is the long term fuel trim memory below the value specified?	115 counts	Go to „Diagnostic Aids for DTC 45 or DTC P0172”	Go to *Step 5*
5	Is the long term fuel trim memory above the value specified?	150 counts	Go to „Diagnostic Aids for DTC 44 or DTC P0171”	-
6	1. Check for a properly installed fuel cap. 2. Check the fuel system pressure. 3. Perform an injector balance test. Is the problem found?	-	Go to *Step 7*	Go to *Step 8*

Excessive Exhaust Emissions or Odors (Cont'd)

Step	Action	Value(s)	Yes	No
7	1. Repair or replace any fuel system components as needed. 2. Perform an emission test. Did the vehicle pass the emission test?	-	System OK	-
8	1. Check the ignition system for proper operation. 2. Inspect the spark plugs for excessive wear, insulation cracks, improper gap, or heavy deposits. 3. Check the ignition wires for cracking, hardness, or improper connections. Is the problem found?	-	Go to *Step 9*	Go to *Step 10*
9	1. Repair or replace any ignition system components as needed. 2. Perform an emission test. Did the vehicle pass the emission test?	-	System OK	-
10	1. Inspect for vacuum leaks. 2. Inspect the catalytic converter for contamination. 3. Inspect for carbon buildup on the throttle body and the throttle plate and inside the engine. Remove with a top engine cleaner. 4. Check the exhaust gas recirculation (EGR) valve for not opening. 5. Check for proper positive crankcase ventilation (PCV) operation. Are all checks and needed repairs complete?	-	System OK	-

DIESELING, RUN-ON

Definition: An engine continues to run after the ignition switch is turned OFF.

Step	Action	Value(s)	Yes	No
1	Were the Important Preliminary Checks performed?	-	Go to *Step 2*	Go to „Important Preliminary Checks„
2	Does the engine run smoothly after the ignition switch is turned OFF?	-	Go to *Step 3*	Go to *Step 4*
3	1. Check the ignition switch and the ignition switch adjustment. 2. Replace the ignition switch if needed. Is the repair complete?	-	System OK	-
4	1. Check the evaporative emission system. 2. Check for leaking fuel injectors. 3. Check the idle air control (IAC) valve operation. 4. Inspect for vacuum leaks. 5. Check for the proper base idle setting. Are all checks and repairs complete?	-	System OK	-

BACKFIRE

Definition: Fuel ignites in the intake manifold, or in the exhaust system, making a loud popping noise.

Important: Before diagnosing the symptom, check service bulletins for updates.

Step	Action	Value(s)	Yes	No
1	Were the Important Preliminary Checks performed?	-	Go to *Step 2*	Go to „Important Preliminary Checks”
2	1. Inspect for crossed or crossfiring ignition wires. 2. Check the ignition system output voltage for all cylinders using a spark tester. 3. Inspect the spark plugs for excessive wear, burned electrodes, improper gap, or heavy deposits. Is the problem found?	-	Go to *Step 3*	Go to *Step 4*
3	Repair or replace any ignition system components as needed. Is the repair complete?	-	System OK	-
4	1. Check the fuel system operation. 2. Check the fuel injectors by performing an injector balance test. Is the problem found?	-	Go to *Step 5*	Go to *Step 6*
5	Repair or replace any fuel system components as needed. Is the repair complete?	-	System OK	-
6	1. Inspect the exhaust gas recirculation (EGR) gasket for a leak or a loose fit. 2. Check the EGR valve for proper operation. 3. Inspect the intake manifold and the exhaust manifold for a casting flash. Is the problem found?	-	Go to *Step 7*	Go to *Step 8*
7	Repair or replace any components as needed. Is the repair complete?	-	System OK	-
8	1. Inspect the timing belt for proper installation and tension. 2. Check the engine compression. 3. Inspect the intake manifold gasket and the exhaust manifold gasket for leaks. 4. Check for sticking or leaking valves. 5. Repair or replace any components as needed. Are all checks and corrections complete?	-	System OK	-

MAINTENANCE AND REPAIR

ON-VEHICLE SERVICE

FUEL TANK

Removal Procedure

Caution: The fuel system is under pressure. To avoid fuel spillage and the risk of personal injury or fire, it is necessary to relieve the fuel system pressure before disconnecting the fuel lines.

1. Relieve the fuel pressure. Refer to „Fuel Pump" in this section.
2. Disconnect the negative battery cable.
3. Drain the fuel tank.
4. Disconnect the right rear parking brake cable from the retaining bracket attached to the right side fuel tank strap.

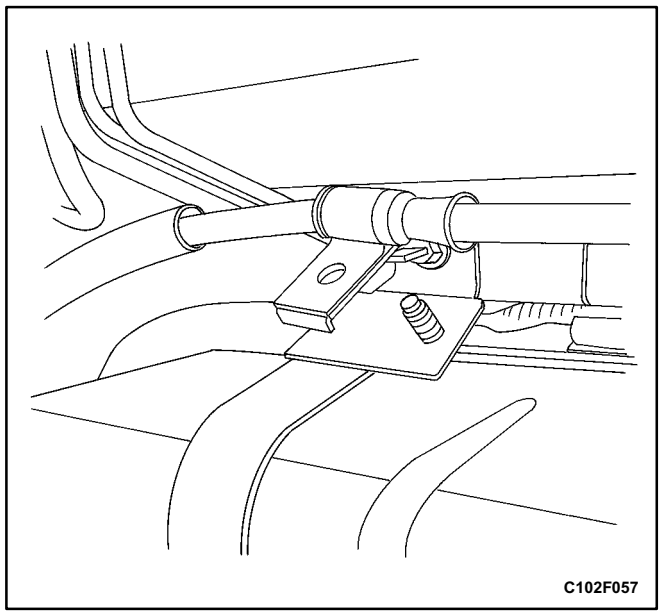
C102F057

5. Remove the fuel tank filler tube clamp at the fuel tank.
6. Disconnect the fuel tank filler tube.
7. Disconnect the fuel tank vent tube at the fuel tank.
8. Disconnect the fuel vapor line near the fuel tank filler tube.

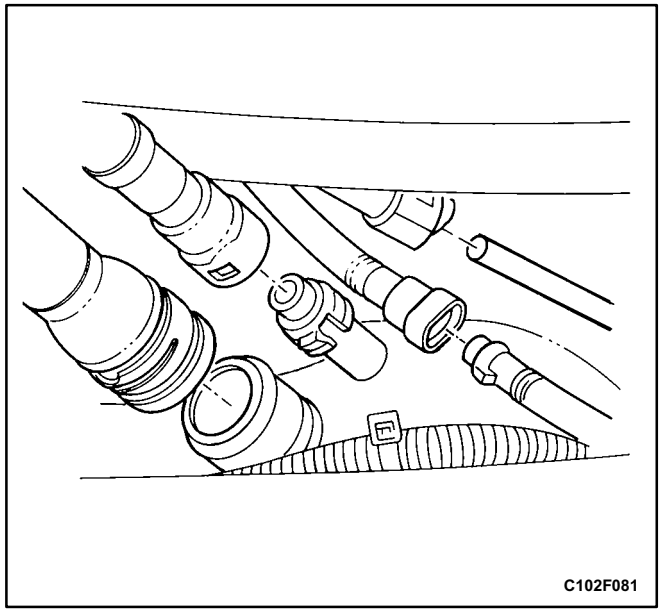
C102F081

9. Disconnect the fuel pump harness connector near the left rear corner of the fuel tank.
10. Disconnect the fuel inlet line and the fuel return line near the right front of the fuel tank.
11. Disconnect the wiring harness clips and the fuel line clips as needed.

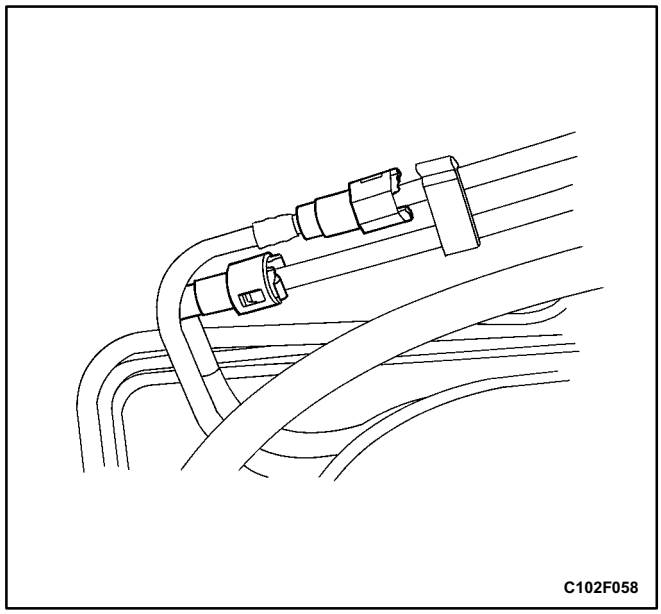
C102F058

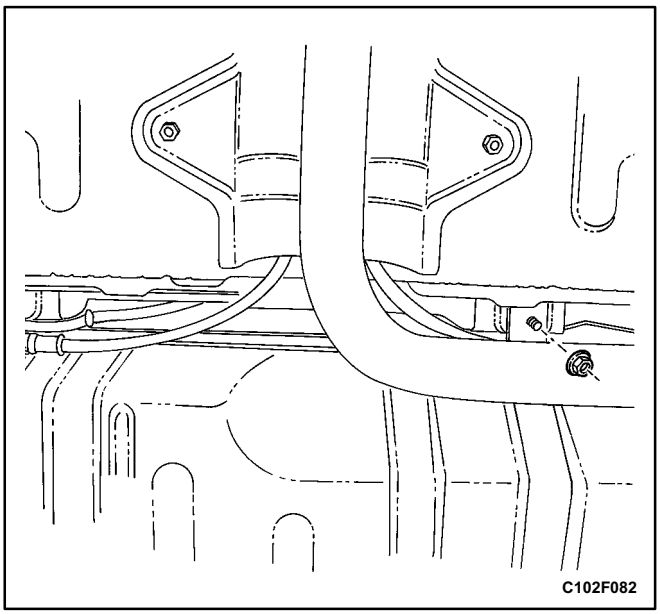

12. Support the fuel tank.
13. Remove the fuel tank strap retaining nuts.
14. Remove the fuel tank straps.
15. Carefully lower the fuel tank.
16. Remove the fuel tank.
17. Transfer any parts as needed.

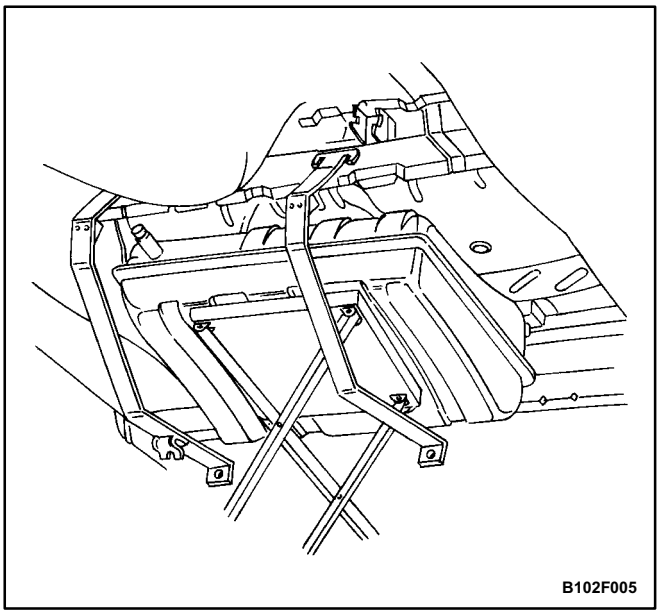

Installation Procedure

1. Raise the fuel tank into position.
2. Install the fuel tank straps.
3. Install the fuel tank strap retaining nuts.

Tighten

Tighten the fuel tank strap retaining nuts to 13 N•m (115 lb•in).

4. Connect the fuel outlet line and the fuel return line.
5. Connect the wiring harness clips and the fuel line clips as needed.
6. Connect the fuel pump harness connector.
7. Connect the fuel vapor line.
8. Connect the fuel tank filler tube.
9. Connect the fuel tank vent tube.
10. Install the fuel tank filler tube clamp at the fuel tank.

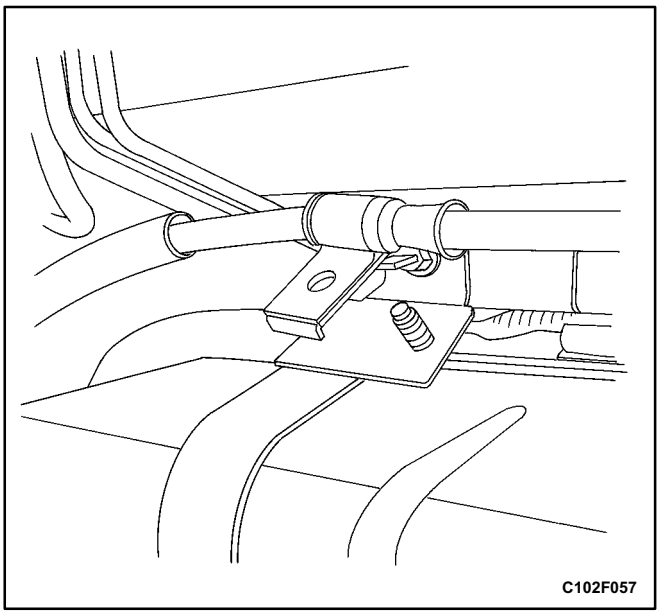

11. Connect the right rear parking brake cable to the retaining bracket attached to the right side fuel tank strap.
12. Connect the negative battery cable.
13. Fill the fuel tank.
14. Perform a leak check of the fuel tank and the fuel line connections.

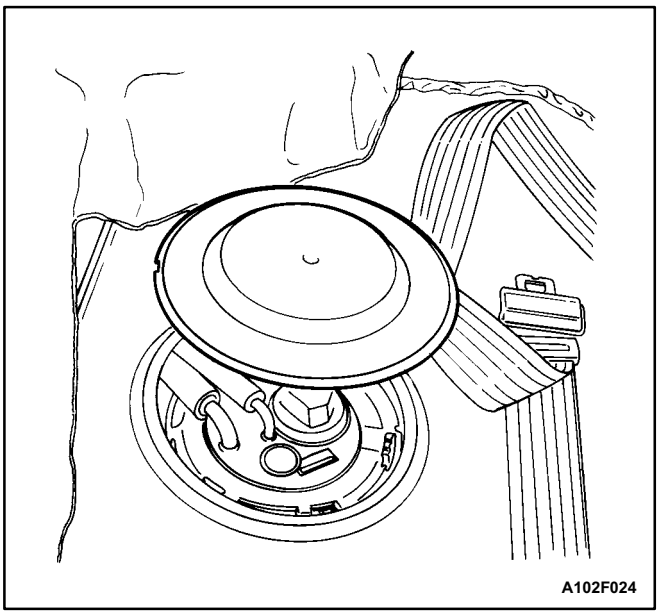
A102F024

FUEL PUMP

Removal Procedure

Caution: The fuel system is under pressure. To avoid fuel spillage and the risk of personal injury or fire, it is necessary to relieve the fuel system pressure before disconnecting the fuel lines.

1. Relieve the fuel system pressure.
   1.1. Remove the fuel cap.
   1.2. Remove fuel pump fuse EF18 from the engine fuse block.
   1.3. Start the engine and allow the engine to stall.
   1.4. Crank the engine for an additional 10 seconds.
2. Disconnect the negative battery cable.
3. Remove the rear seat. Refer to *Section 9H, Seats.*
4. Remove the fuel pump access cover.

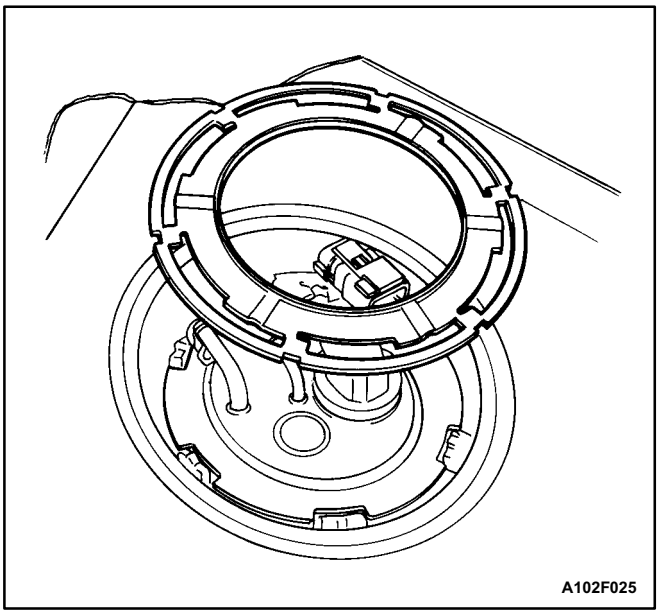
A102F025

5. Disconnect the electrical connector at the fuel pump assembly.
6. Disconnect the fuel outlet line.
7. Disconnect the fuel tank return line.
8. Turn the lock ring counterclockwise to clear the tank tabs.
9. Remove the fuel pump assembly from the tank.
10. Remove and discard the gasket.

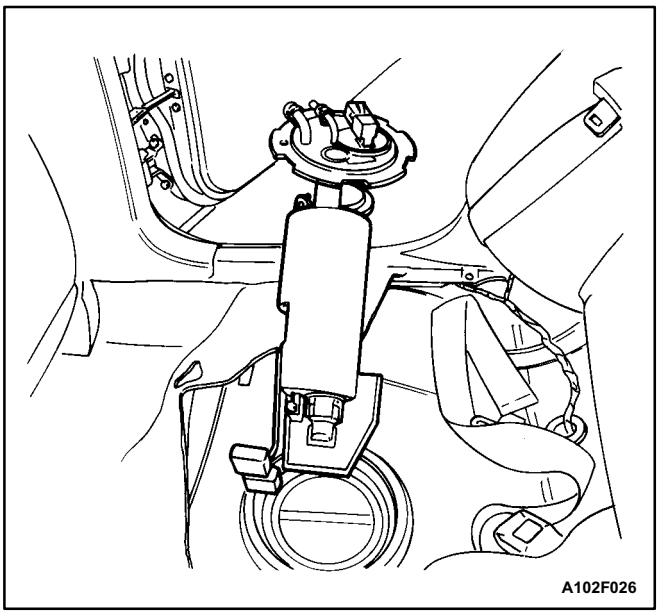
A102F026

Installation Procedure

1. Clean the gasket mating surface on the fuel tank.
2. Position the new gasket in place.
3. Install the fuel pump into the fuel tank in the same location as removed for ease of line and connector installation.
4. Position the lock ring in place and turn it clockwise until it contacts the tank stop.
5. Connect the fuel pump assembly connector.
6. Install the fuel pump outlet line.
7. Install the fuel tank return line.
8. Install the fuel pump access cover.
9. Connect the negative battery cable.
10. Perform an operational check of the fuel pump.
11. Install the rear seat. Refer to *Section 9H, Seats.*

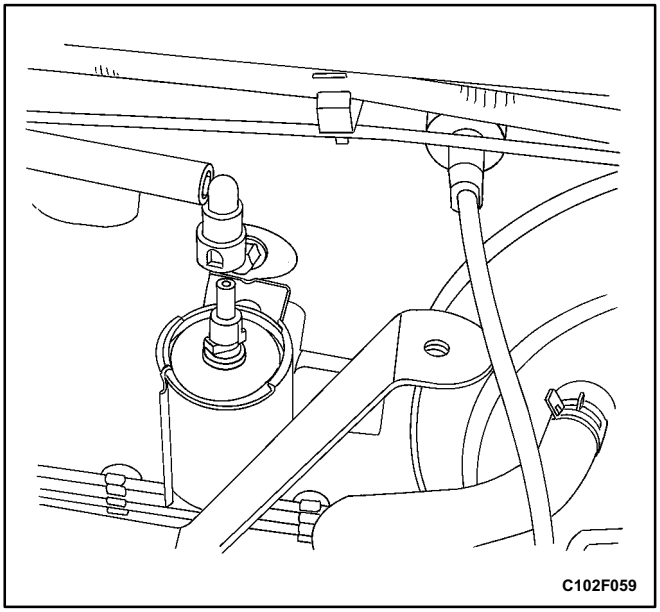

FUEL FILTER

Removal Procedure

1. Disconnect the negative battery cable.

Caution: The fuel system is under pressure. To avoid fuel spillage and the risk of personal injury or fire, it is necessary to relieve the fuel system pressure before disconnecting the fuel lines.

2. Relieve the fuel system pressure. Refer to „Fuel Pump" in this section.
3. Disconnect the inlet/outlet fuel lines by moving the line connector lock forward and pulling the hose off of the fuel filter tube.
4. Remove the fuel filter.

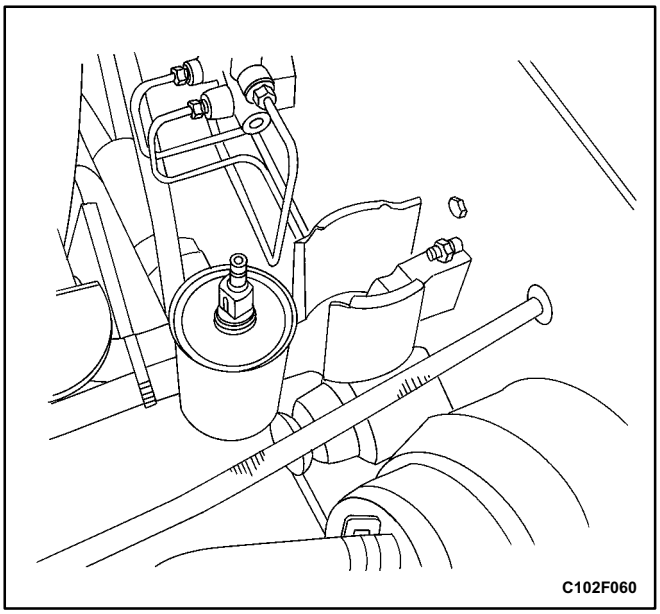

Installation Procedure

1. Install the new fuel filter into the retaining clamp. Note the flow direction.
2. Install the fuel filter.
3. Connect the inlet/outlet lines. Secure the lines with the connector lock.
4. Connect the negative battery cable.
5. Perform a leak test of the fuel filter.

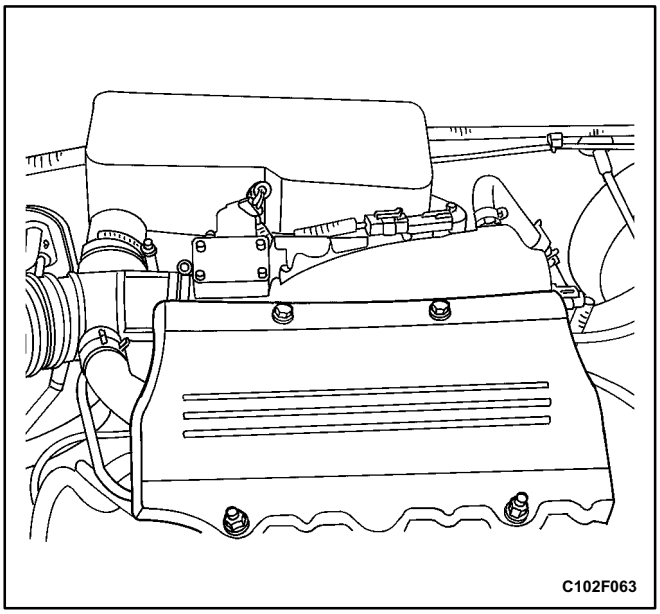

FUEL RAIL AND INJECTORS (SOHC)

Removal Procedure

Caution: The fuel system is under pressure. To avoid fuel spillage and the risk of personal injury or fire, it is necessary to relieve the fuel system pressure before disconnecting the fuel lines.

1. Relieve the fuel pressure. Refer to „Fuel Pump" in this section.
2. Disconnect the negative battery cable.
3. Remove the bolts and the fuel injector cover.
4. Remove the air intake tube and resonator.
5. Disconnect the fuel injector harness connectors.
6. Remove the fuel pressure regulator vacuum hose.

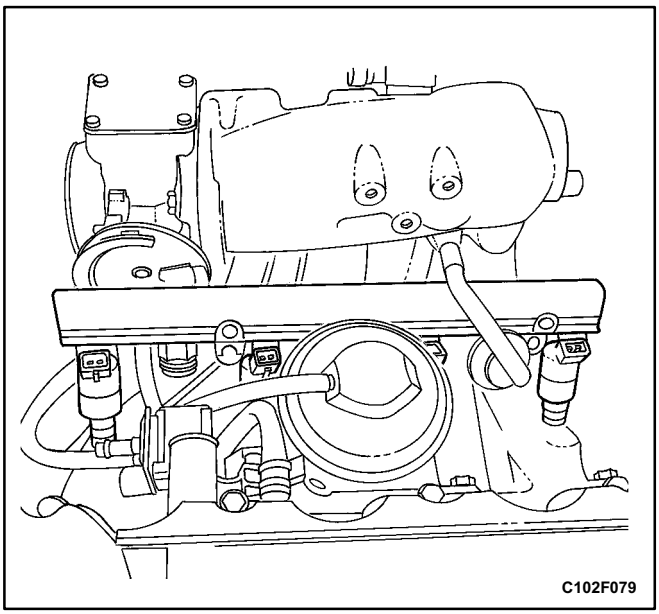

7. Remove the throttle cable bracket and bolt.
8. Remove the fuel inlet line.
9. Remove the fuel rail mounting bolts.

Notice: Before removal, the fuel rail assembly may be cleaned with a spray type cleaner, following package instructions. Do not immerse the fuel rails in liquid cleaning solvent. Use care in removing the fuel rail assembly to prevent damage to the electrical connectors and the injector spray tips. Prevent dirt and other contaminants from entering open lines and passages. Fittings should be capped and holes plugged during service.

Important: If a fuel injector becomes separated from the fuel rail and remains in the cylinder head, replace the fuel injector O-ring seals and the retaining clip.

10. Remove the fuel rail with the fuel injectors attached.

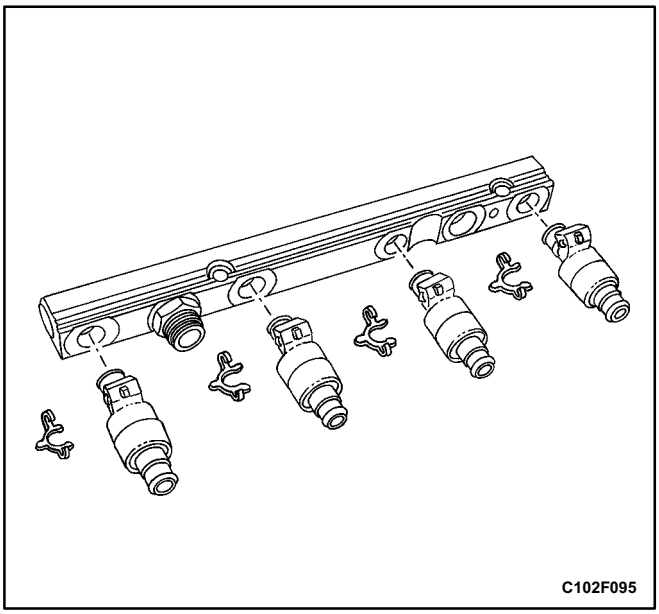

11. Remove the fuel injector retainer clips.
12. Remove the fuel injectors by pulling them down and out.
13. Discard the fuel injector O-rings.

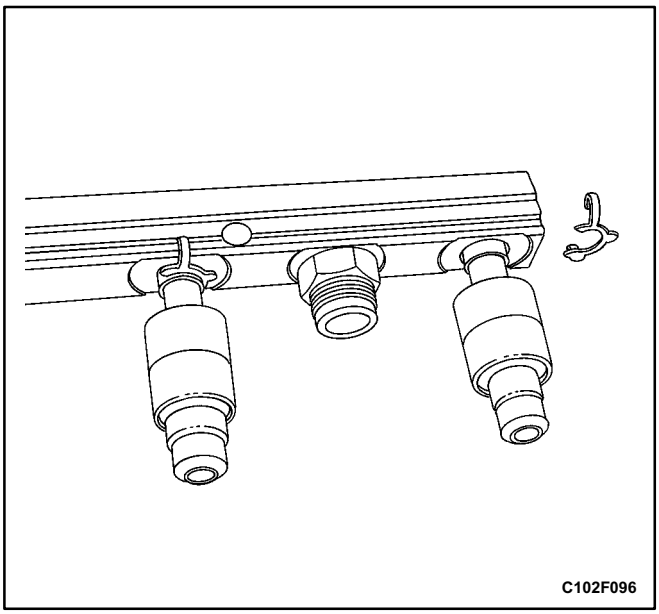

Installation Procedure

Important: Different fuel injectors are calibrated for different flow rates. When ordering new fuel injectors, be certain to order the identical part number that is inscribed on the old fuel injector.

1. Lubricate the new fuel injector O-rings with engine oil. Install the new O-rings on the fuel injectors.
2. Install the fuel injectors into the fuel rail sockets with the fuel injector terminals facing outward.
3. Install the fuel injector retainer clips onto the fuel injectors and the fuel rail ledge.
4. Make sure that the clips are parallel to the fuel injector harness connector.

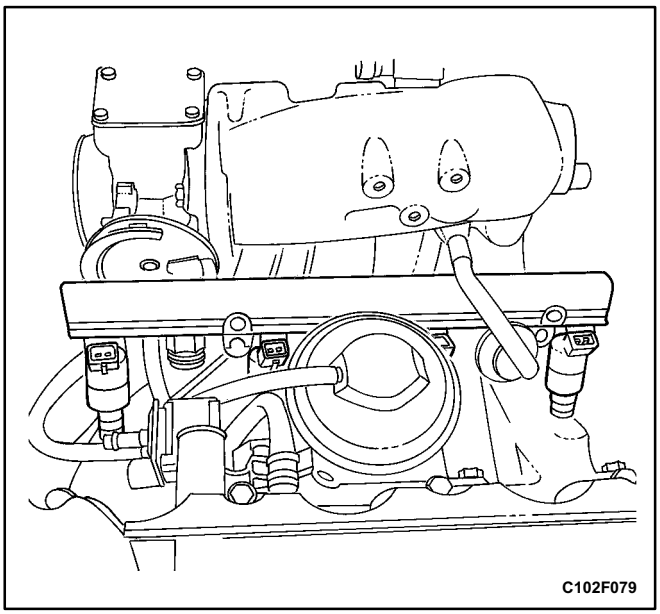

5. Install the fuel rail assembly into the cylinder head.
6. Install the fuel rail retaining bolts.

Tighten

Tighten the fuel rail retaining bolts to 25 N•m (18 lb•ft).

7. Install the fuel inlet hose line.
8. Connect the fuel injector harness connectors. Rotate the fuel injector as required to avoid stretching the wire harness.
9. Install the fuel pressure regulator vacuum hose.
10. Connect the negative battery cable.
11. Perform a leak check of the fuel rail and the fuel injectors.

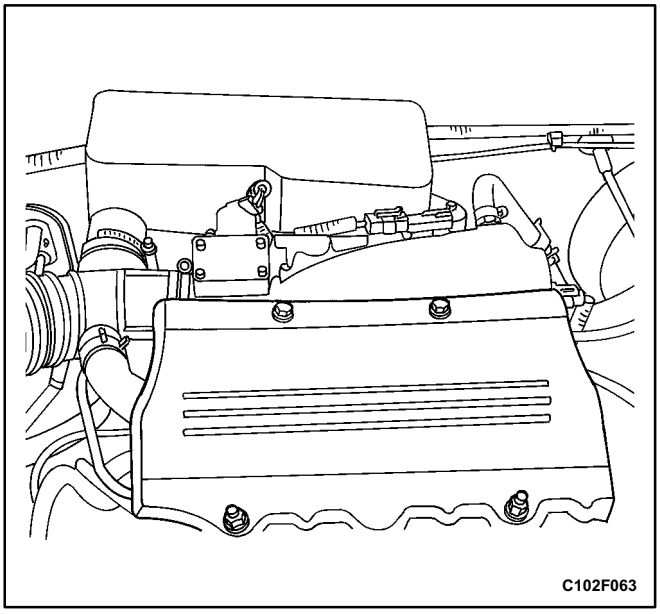

12. Install the air tube and resonator.
13. Install the throttle cable bracket with the bolts.

Tighten

Tighten the throttle cable bracket bolts to 10 N•m (89 lb•in).

14. Install the fuel injector cover with the bolts.

Tighten

Tighten the fuel injector cover bolts to 10 N•m (89 lb•in).

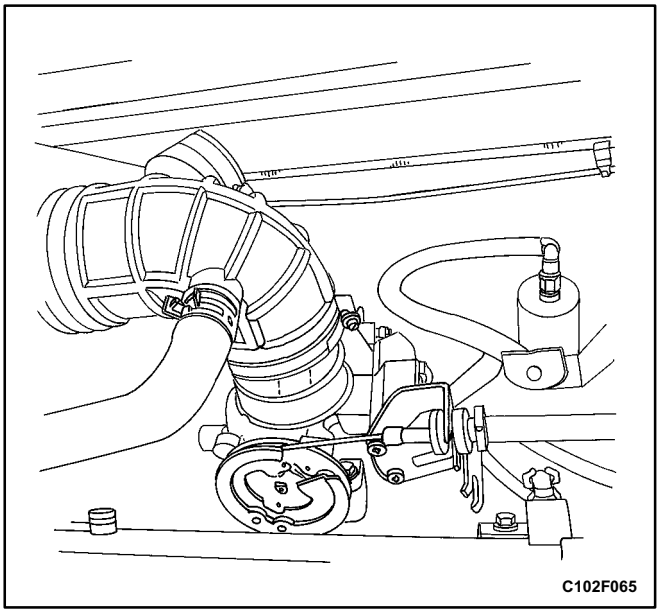

FUEL RAIL AND INJECTORS (DOHC)

Removal Procedure

Caution: The fuel system is under pressure. To avoid fuel spillage and the risk of personal injury or fire, it is necessary to relieve the fuel system pressure before disconnecting the fuel lines.

1. Relieve the fuel system pressure. Refer to „Fuel Pump" in this section.
2. Disconnect the negative battery cable.
3. Disconnect the manifold air temperature (MAT) sensor connector.
4. Disconnect the breather hose from the valve cover.

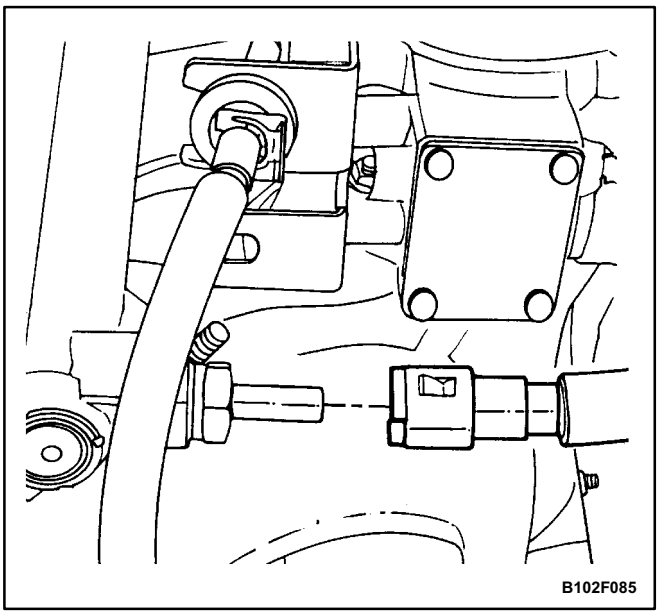

5. Remove the air intake tube and resonator.
6. Disconnect the positive crankcase ventilation (PCV) hose from the valve cover.
7. Disconnect the throttle cables from the throttle body and the bracket.
8. Remove the fuel pressure regulator. Refer to „Fuel Pressure Regulator (DOHC)" in this section.
9. Disconnect the fuel return line at the fuel rail.
10. Disconnect the fuel inlet line at the fuel rail.
11. Remove the fuel rail retaining bolts.
12. Remove the throttle cable bracket bolts and the brackets.

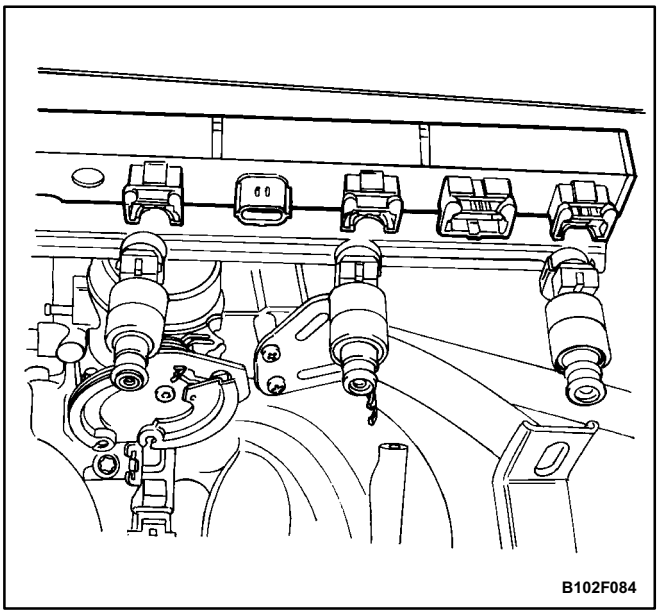

Notice: Before removal, the fuel rail assembly may be cleaned with a spraytype cleaner, following package instructions. Do not immerse the fuel rails in liquid cleaning solvent. Use care in removing the fuel rail assembly to prevent damage to the electrical connectors and the injector spray tips. Prevent dirt and other contaminants from entering open lines and passages. Fittings should be capped and holes plugged during service.

Important: If an injector becomes separated from the rail and remains in the cylinder head, replace the injector Oring seals and the retaining clip.

13. Remove the fuel rail with the fuel injector channel cover and the injectors attached.
14. Disconnect the fuel injector channel cover connectors.

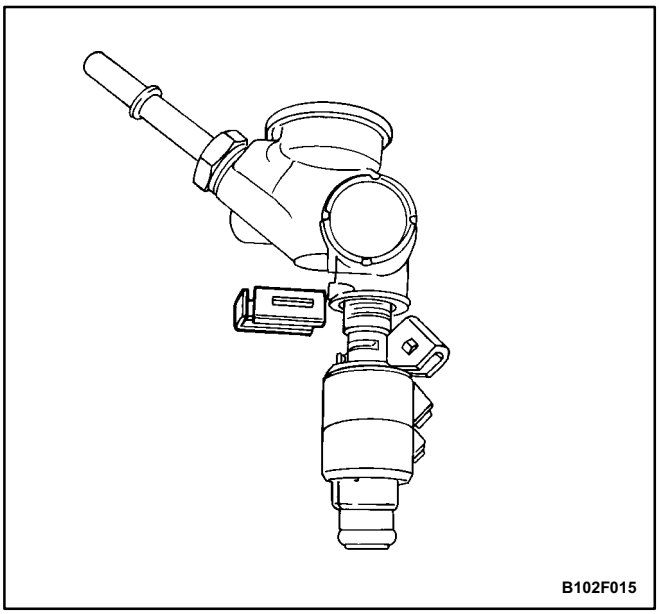

15. Remove the fuel injector retainer clips.
16. Remove the fuel injectors by pulling them down and out.
17. Discard the fuel injector Orings.

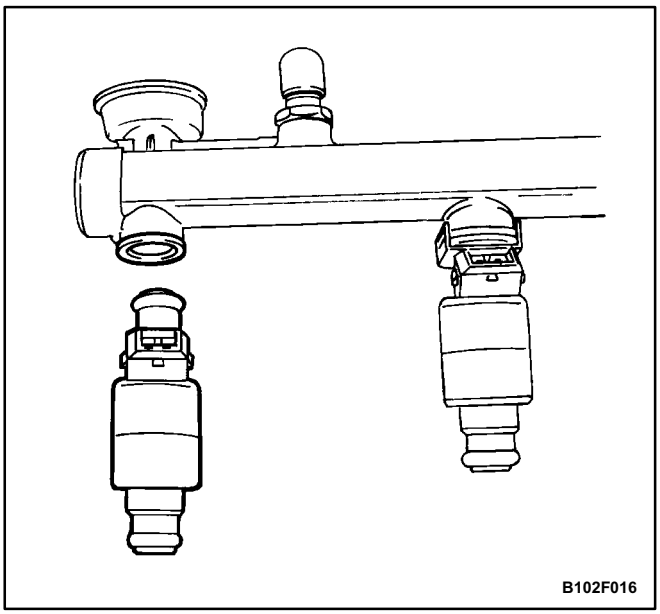

Installation Procedure

Important: Different injectors are calibrated for different flow rates. When ordering new fuel injectors, be certain to order the identical part number that is inscribed on the old injector.

1. Lubricate the new fuel injector O-rings with engine oil. Install the new O-rings on the fuel injectors.
2. Install the fuel injectors into the fuel rail sockets with the fuel injector terminals facing outward.
3. Install the fuel injector retaining clips onto the fuel injector and the fuel rail ledge.
4. Make sure that the clips are parallel to the fuel injector harness connector.

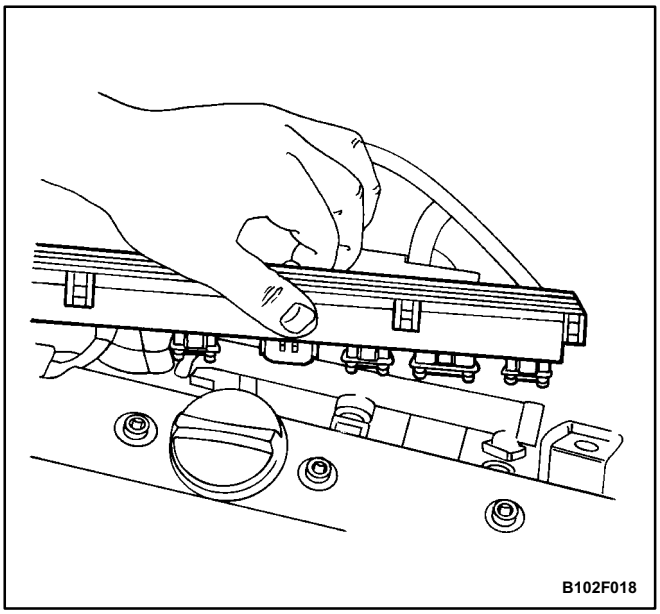

5. Install the fuel rail assembly into the cylinder head.
6. Install the fuel rail retaining bolts.

Tighten

Tighten the fuel rail retaining bolts to 25 N•m (18 lb•ft).

7. Connect the fuel inlet line to the fuel rail.
8. Connect the fuel return line to the fuel rail
9. Install the fuel pressure regulator. Refer to „Fuel Pressure Regulator (2.0L DOHC)" in this section.
10. Connect the fuel injector channel cover and connectors. Rotate each fuel injector as required.

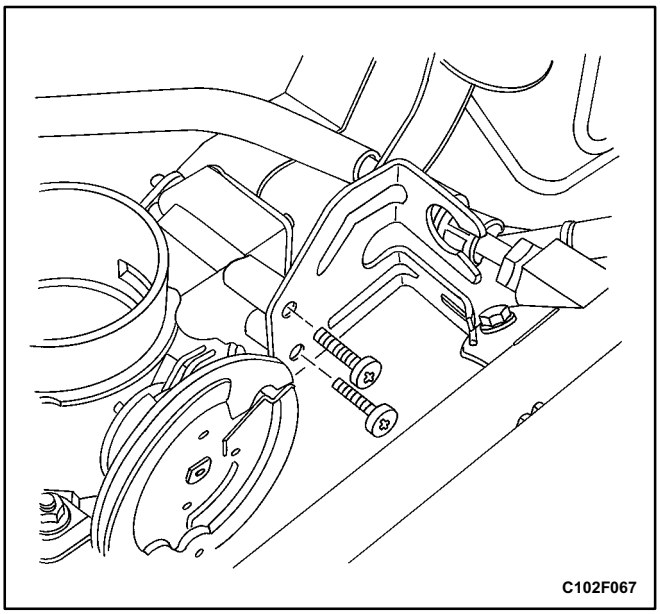

11. Install the throttle cable bracket and the bolts.

Tighten

Tighten the throttle cable bracket bolts to 10 N•m (89 lb•in).

12. Connect the PCV hose to the valve cover.
13. Connect the throttle cables to the throttle body and bracket.

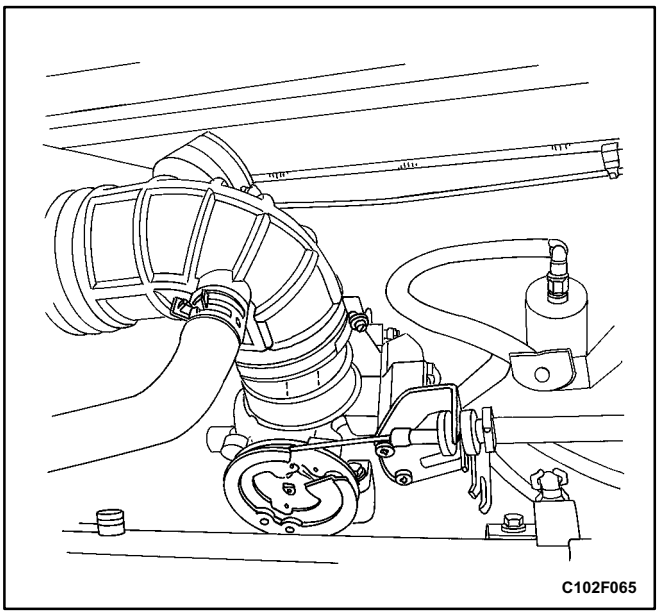

14. Install the air intake tube and resonator.
15. Connect the breather hose to the valve cover.
16. Connect the MAT sensor connector.
17. Connect the negative battery cable.
18. Perform a leak check of the fuel rail and fuel injectors.

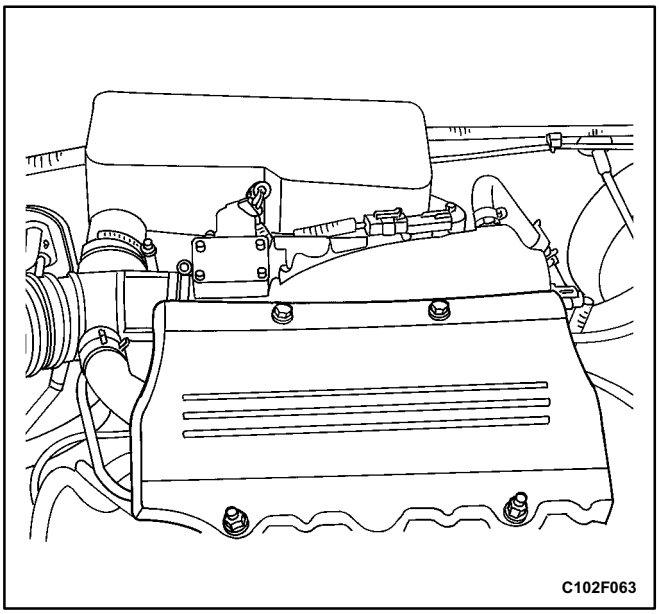

FUEL PRESSURE REGULATOR (SOHC)

Removal Procedure

Caution: The fuel system is under pressure. To avoid fuel spillage and the risk of personal injury or fire, it is necessary to relieve the fuel system pressure before disconnecting the fuel lines.

1. Relieve the fuel pressure. Refer to „Fuel Pump” in this section.
2. Disconnect the negative battery cable.
3. Remove the bolts and the fuel injector cover.
4. Remove the fuel rail. Refer to „Fuel Rail and Injectors (SOHC)” in this section.

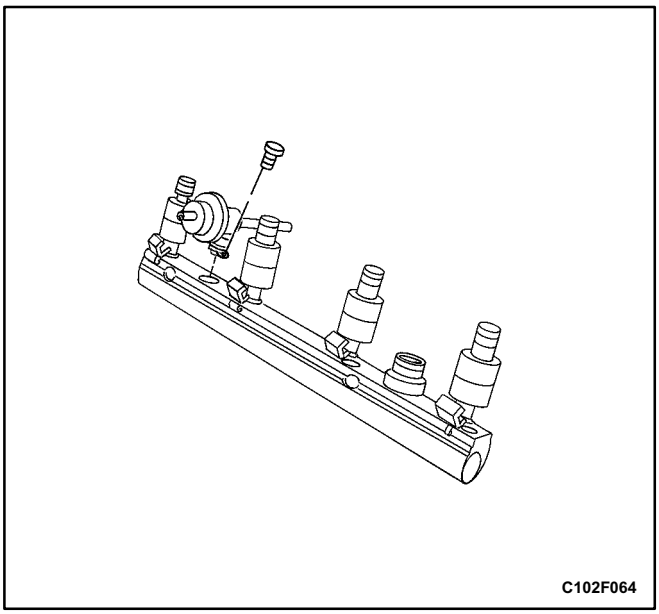

5. Remove the fuel pressure regulator retaining bolt.
6. Remove the fuel pressure regulator by turning it back and forth and then pulling it out.
7. Discard the O-ring.

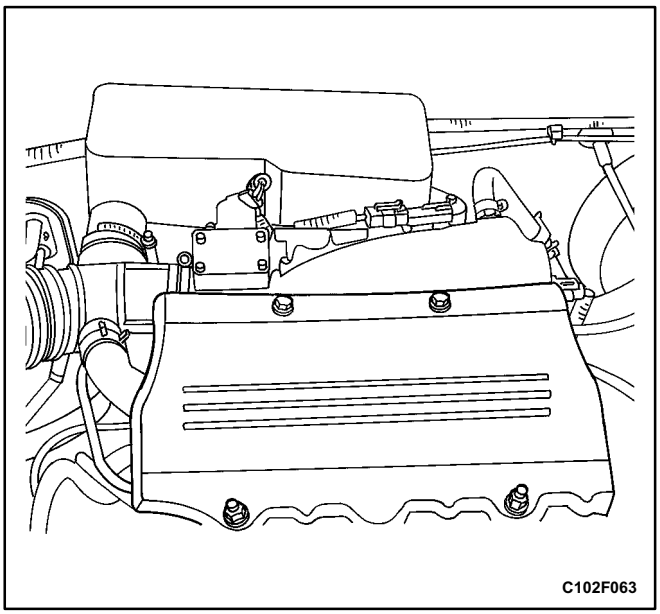

Installation Procedure

1. Lubricate a new O-ring with engine oil. Install the new O-ring onto the fuel pressure regulator body.
2. Insert the fuel pressure regulator into the fuel rail body.
3. Install the retaining bolt.

   Tighten

   Tighten the fuel pressure regulator retaining bolt to 10 N•m (89 lb•in).
4. Install the fuel rail. Refer to „Fuel Rail and Injectors (SOHC)" in this section.
5. Connect the negative battery cable.
6. Perform a leak test of the fuel pressure regulator with the engine off and the ignition ON.
7. Install the fuel injector cover with the bolts.

   Tighten

   Tighten the fuel injector cover bolts to 10 N•m (89 lb•in).

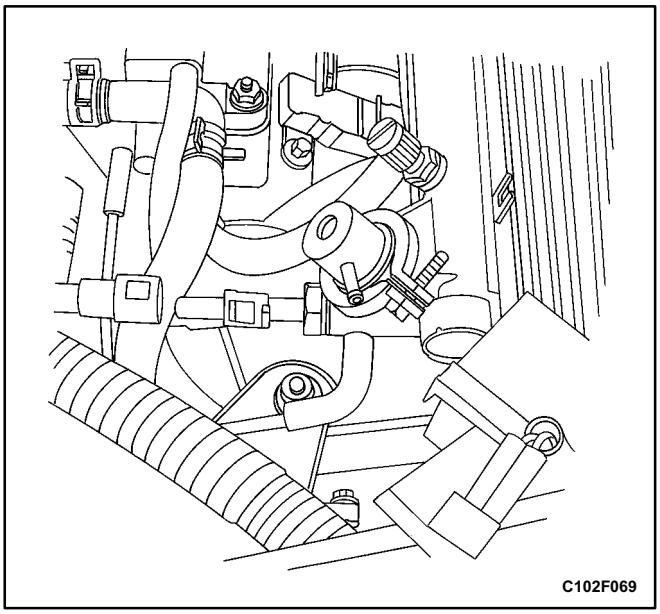

FUEL PRESSURE REGULATOR (DOHC)

Removal Procedure

Caution: The fuel system is under pressure. To avoid fuel spillage and the risk of personal injury or fire, it is necessary to relieve the fuel system pressure before disconnecting the fuel lines.

1. Relieve the fuel pressure. Refer to „Fuel Pump" in this section.
2. Disconnect the negative battery cable.
3. Disconnect the manifold air temperature (MAT) sensor connector.
4. Disconnect the breather hose from the valve cover.
5. Remove the air intake tube.
6. Disconnect the vacuum hose from the fuel pressure regulator.

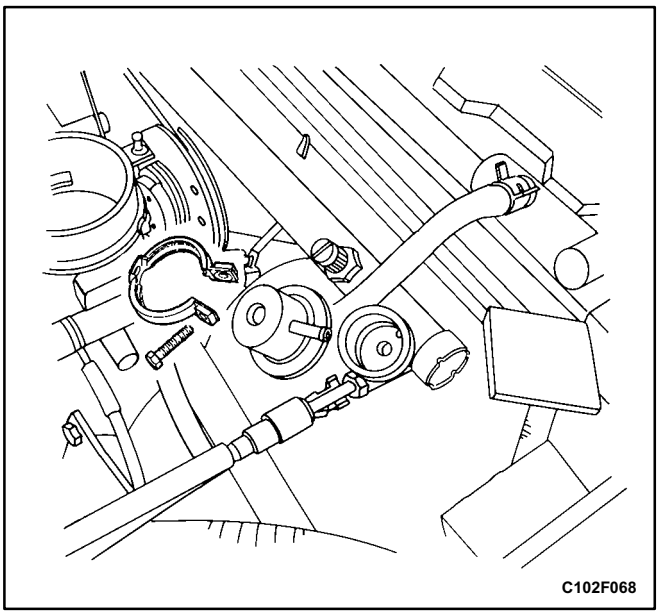

7. Remove the fuel pressure regulator retaining clamp.
8. Remove the fuel pressure regulator by turning it back and forth and then pulling it out.
9. Discard the O-ring.

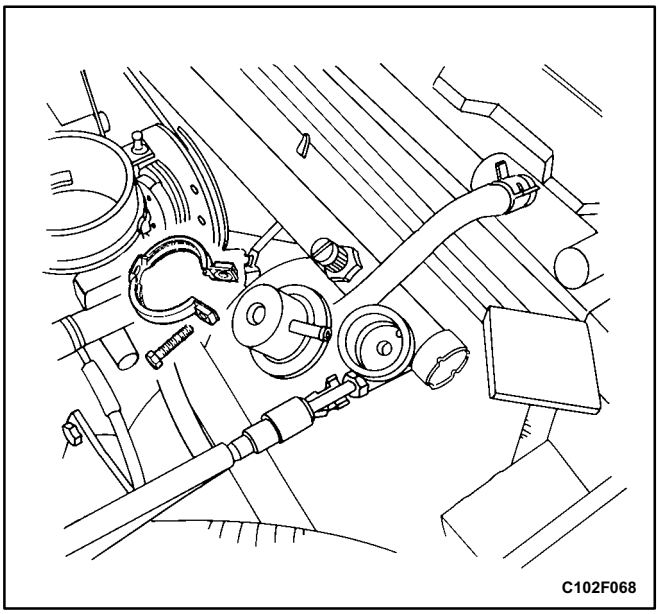

Installation Procedure

1. Lubricate a new O-ring. Install the new O-ring onto the fuel pressure regulator body.
2. Insert the fuel pressure regulator into the fuel rail body.
3. Install the fuel pressure regulator retaining clamp.

   Tighten

   Tighten the fuel pressure regulator retaining clamp to 12 N•m (106 lb•in).

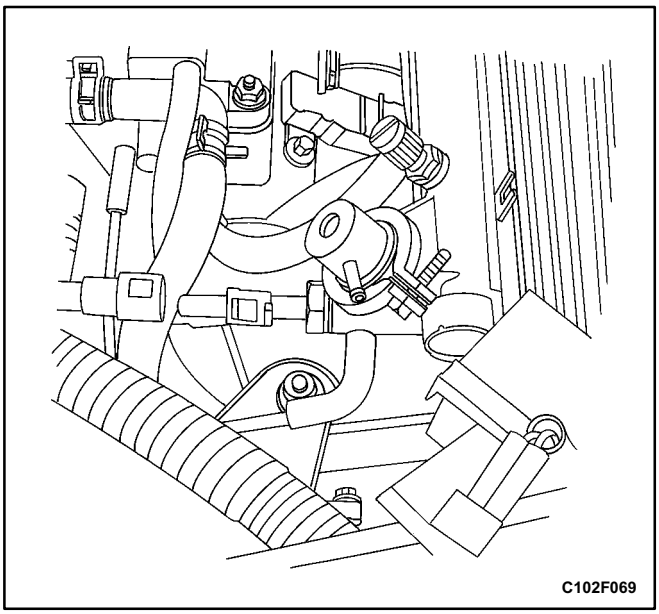

4. Connect the vacuum hose to the fuel pressure regulator.
5. Install the air intake tube.
6. Connect the breather hose to the valve cover.
7. Connect the MAT sensor connector.
8. Connect the negative battery cable.
9. Perform a leak test of the fuel pressure regulator with the engine off and the ignition ON.

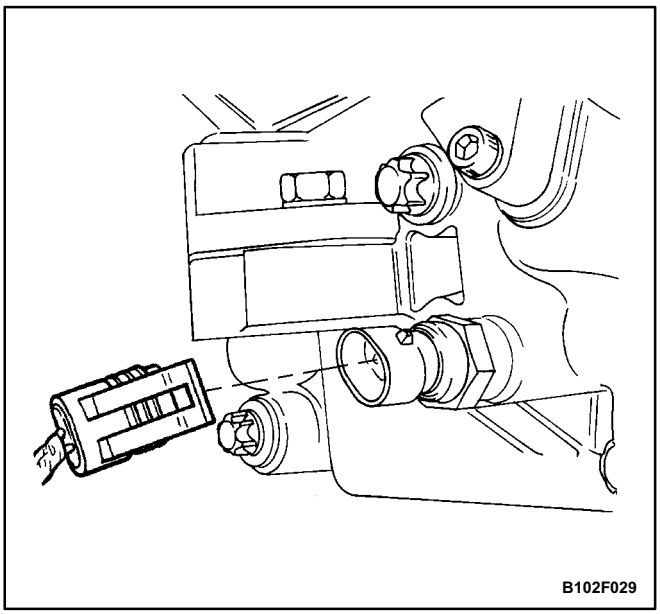

COOLANT TEMPERATURE SENSOR (TYPICAL)

Removal Procedure

1. Relieve the coolant system pressure.
2. Disconnect the negative battery cable.
3. Disconnect the coolant temperature sensor (CTS) connector.

Notice: Take care when handling the coolant temperature sensor. Damage to the sensor will affect the proper operation of the fuel injection system.

4. Remove the CTS from the direct ignition system (DIS) ignition coil adapter.

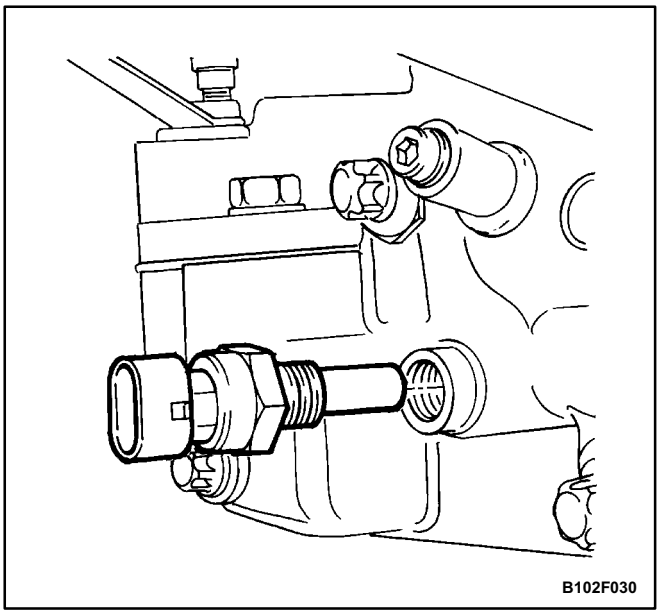

Installation Procedure

1. Coat the threads of the CTS with sealer.
2. Install the CTS into the DIS ignition coil adapter.

Tighten

Tighten the coolant temperature sensor to 25 N•m (18 lb•ft).

3. Connect the CTS connector.
4. Fill the coolant system.
5. Connect the negative battery cable.

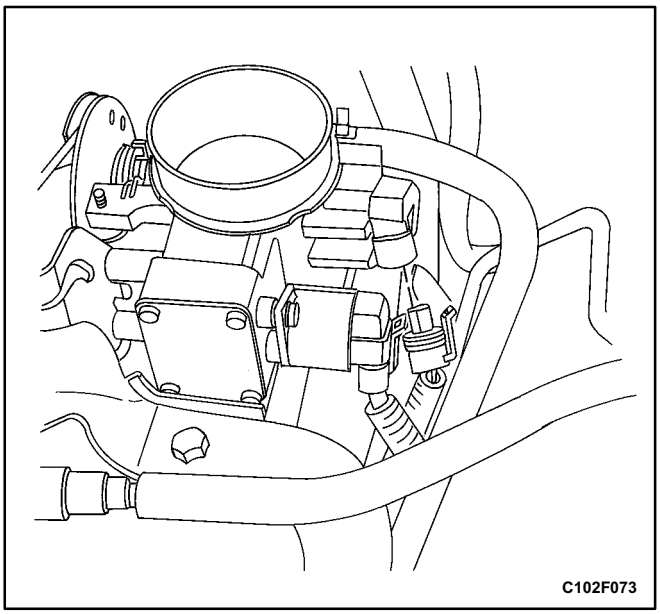

THROTTLE POSITION SENSOR (TYPICAL)

Removal Procedure

1. Disconnect the negative battery cable.
2. Remove the air intake tube and resonator.
3. Disconnect the throttle position sensor (TPS) connector.
4. Remove the TPS retaining bolts and the TPS.

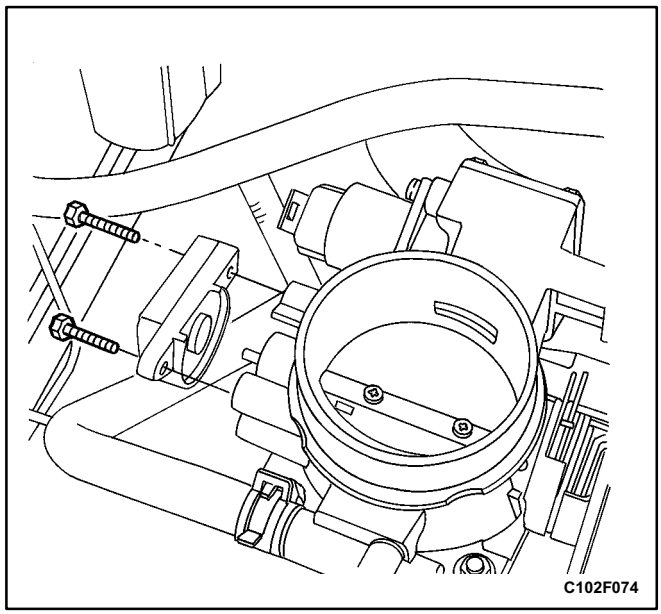

Installation Procedure

1. With the throttle valve closed, position the TPS on the throttle shaft. Align the TPS with the bolt holes.
2. Install the TPS retaining bolts.

   Tighten

   Tighten the throttle position sensor retaining bolts to 2 N•m (18 lb•in).
3. Connect the TPS connector.
4. Install the air intake tube and resonator.
5. Connect the negative battery cable.

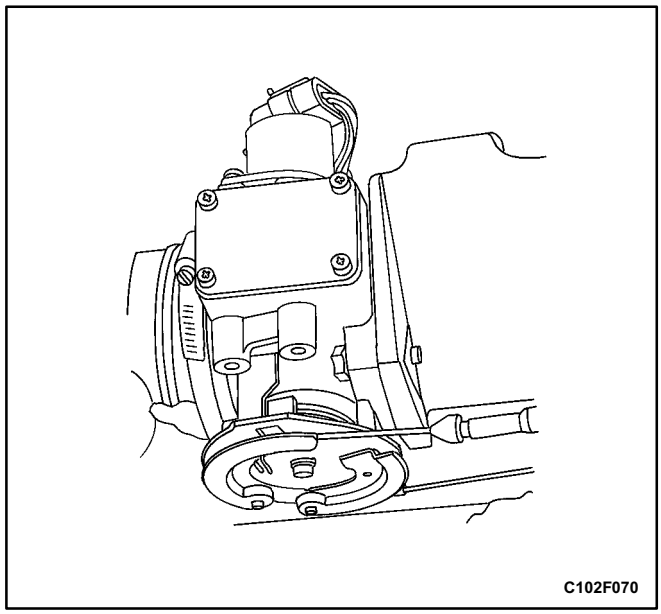

THROTTLE BODY (SOHC)

Removal Procedure

1. Disconnect the negative battery cable.
2. Remove the air intake tube from the throttle body.
3. Disconnect the throttle cables by opening the throttle and moving the cable through the release slot.
4. Remove the resonator.

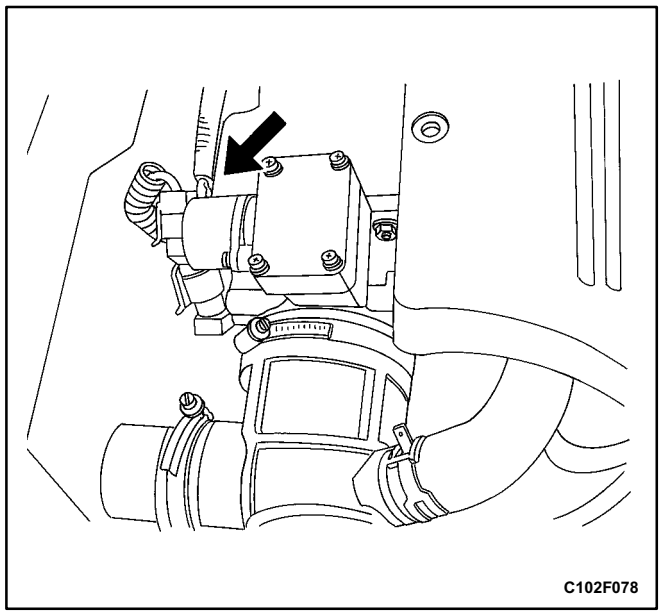

5. Disconnect the vacuum hoses from the throttle body.
6. Disconnect the throttle position sensor (TPS) and the idle air control valve connectors.

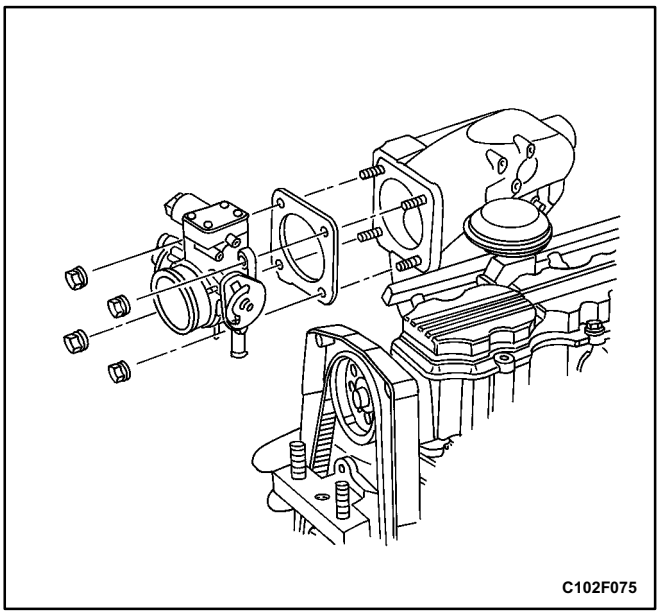

7. Remove the coolant hoses from the throttle body.
8. Remove the throttle body retaining nuts.
9. Remove the throttle body and discard the gasket.
10. Remove the TPS. Refer to „Throttle Position Sensor" in this section.
11. Remove the idle air control (IAC) valve. Refer to „Idle Air Control Valve" in this section.

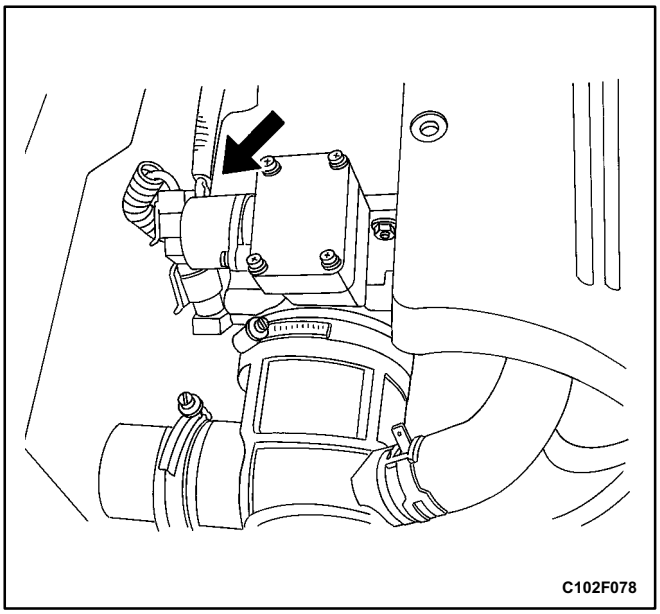

Installation Procedure

Notice: Use care in cleaning old gasket material from machined aluminum surfaces. Sharp tools may damage sealing surfaces.

1. Clean the gasket mating surface on the intake manifold.

Notice: The throttle body may be cleaned in a cold immersiontype cleaner following disassembly. The TPS and the idle air control valve should not come in contact with any solvent or cleaner as they may be damaged.

2. Clean the throttle body.
3. Install the TPS. Refer to „Throttle Position Sensor" in this section.
4. Install the IAC valve. Refer to „Idle Air Control Valve" in this section.

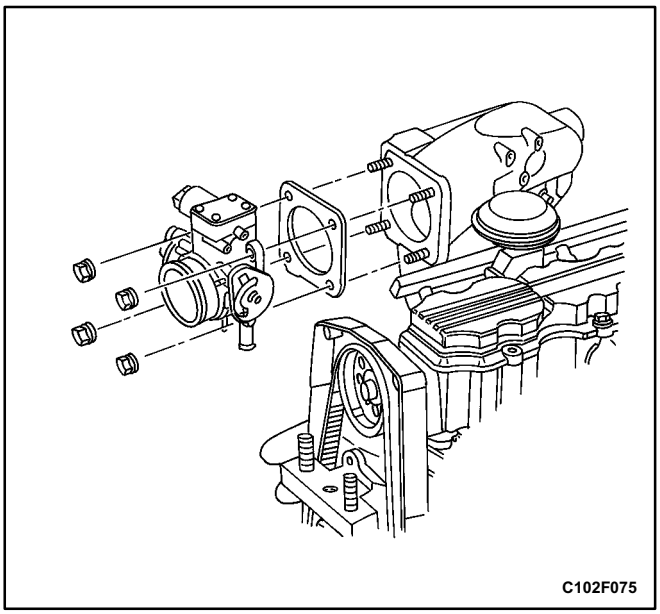

5. Install the throttle body assembly with a new gasket to the intake manifold.
6. Install the throttle body retaining nuts.

Tighten

Tighten the throttle body retaining nuts to 15 N•m (11 lb•ft).

7. Install the coolant hoses.
8. Connect the vacuum hoses to the throttle body.

Important: Make sure the throttle control cables do not hold the throttle open. With the engine off, check to see that the accelerator pedal is free.

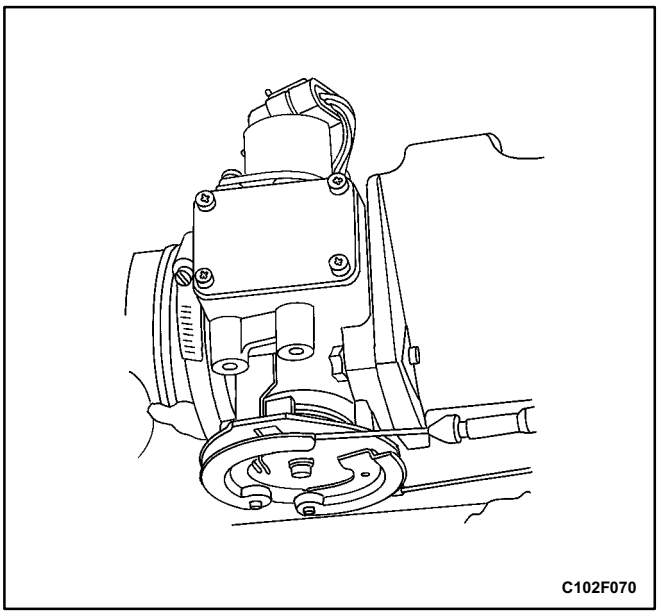

9. Connect the throttle cables.
10. Install the air intake tube.
11. Connect the TPS connector and the idle air control valve connector.
12. Install the resonator.
13. Connect the negative battery cable.
14. Fill the cooling system.

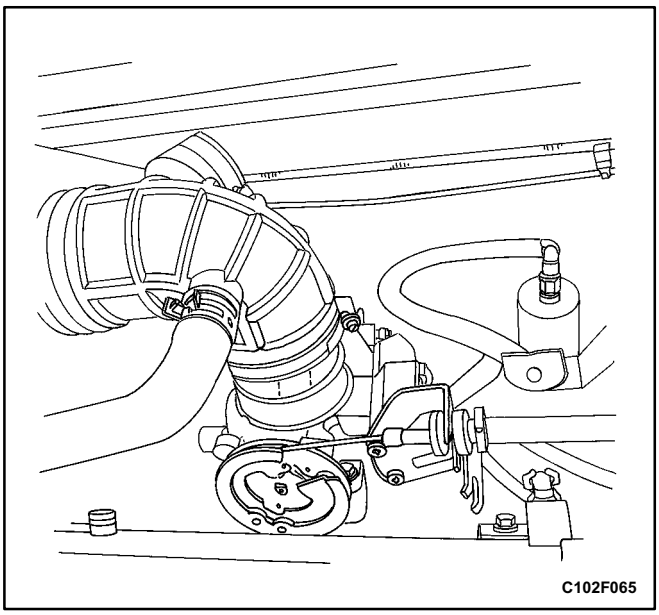

THROTTLE BODY (DOHC)

Removal Procedure

1. Disconnect the negative battery cable.
2. Disconnect the manifold air temperature (MAT) sensor connector.
3. Disconnect the breather hose from the valve cover.
4. Remove the air intake tube.

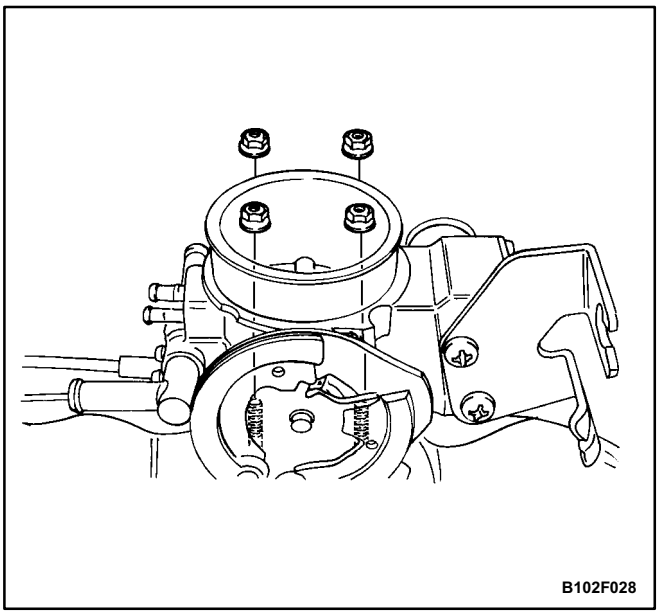

5. Disconnect the throttle cables by opening the throttle and moving the cable through the release slot.
6. Disconnect the vacuum hoses from the throttle body.
7. Disconnect the throttle position sensor (TPS) and the idle air control valve connectors.
8. Disconnect the coolant hoses from the throttle body.
9. Remove the throttle body retaining nuts.

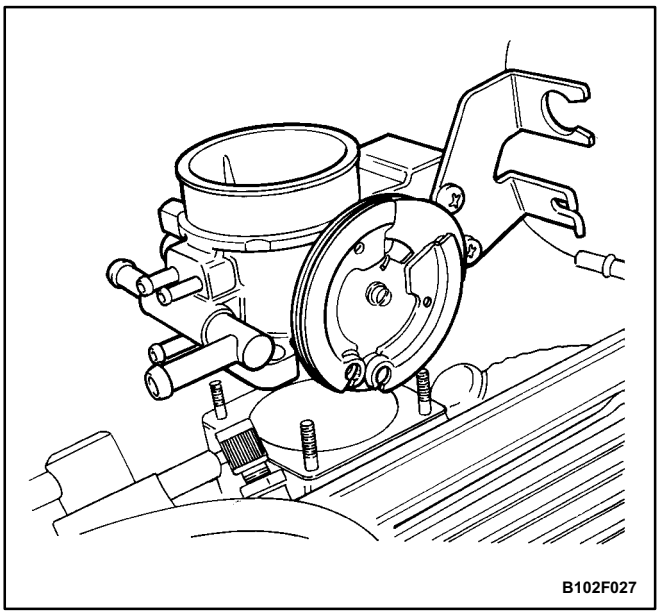

Notice: Cover the opening of the intake manifold after removing the throttle body assembly. This will prevent any objects or debris from entering the engine which may cause damage.

10. Remove the throttle body and discard the gasket.
11. Remove the TPS. Refer to „Throttle Position Sensor" in this section.
12. Remove the idle air control (IAC) valve. Refer to „Idle Air Control Valve" in this section.

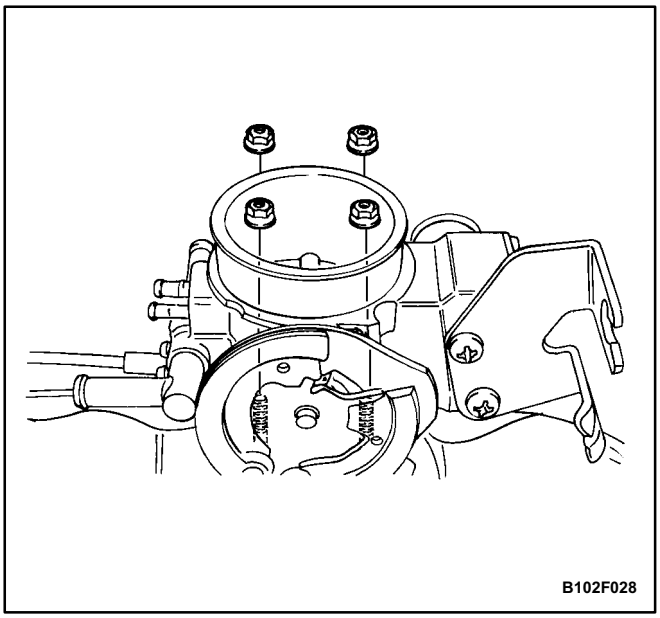

Installation Procedure

Notice: Use care in cleaning old gasket material from machined aluminum surfaces. Sharp tools may damage sealing surfaces.

1. Clean the gasket mating surface on the intake manifold.

Notice: The throttle body may be cleaned in a cold immersiontype cleaner following disassembly. The TPS and the idle air control valve should not come in contact with any solvent or cleaner, as they may be damaged.

2. Clean the throttle body.
3. Install the TPS. Refer to „Throttle Position Sensor" in this section.
4. Install the IAC valve. Refer to „Idle Air Control Valve" in this section.
5. Install the throttle body assembly with a new gasket to the intake manifold.
6. Install the throttle body retaining nuts.

Tighten

Tighten the throttle body retaining nuts to 9 N•m (80 lb•in).

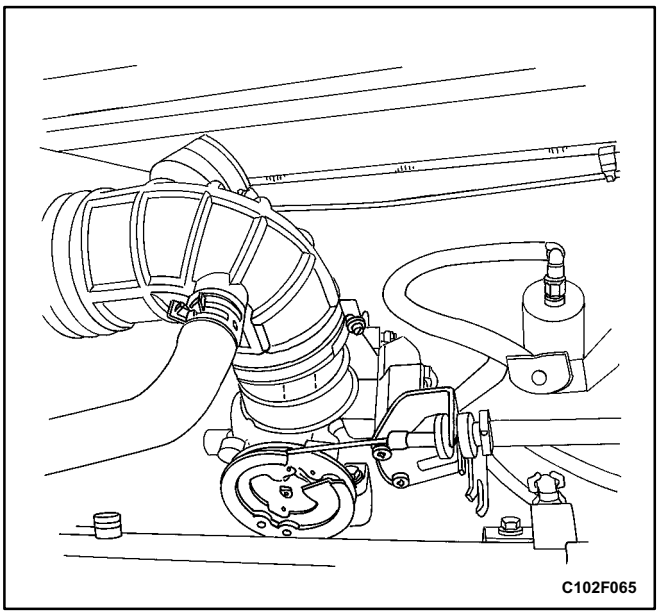
C102F065

7. Connect the TPS connector and the IAC valve connector.
8. Connect the coolant hoses to the throttle body.
9. Connect the vacuum hoses to the throttle body.

Important: Make sure the throttle/cruise control cables do not hold the throttle open. With the engine off, check to see that the accelerator pedal is free.

10. Connect the throttle/cruise cables.
11. Install the air intake tube.
12. Connect the breather hose to the valve cover.
13. Connect the MAT sensor connector.
14. Connect the negative battery cable.
15. Fill the cooling system.

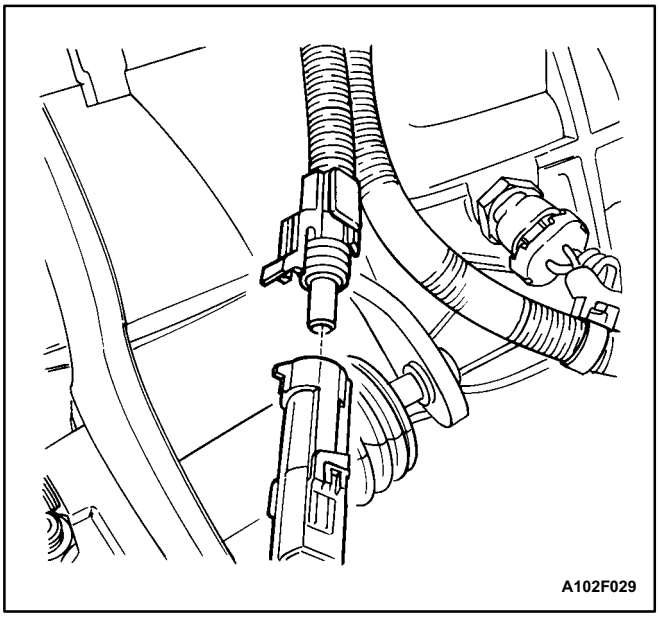
A102F029

OXYGEN SENSOR (TYPICAL)

Removal Procedure

1. Disconnect the negative battery cable.

Notice: The oxygen sensor uses a permanently attached pigtail and connector. This pigtail should not be removed from the oxygen sensor. Damage or removal of the pigtail or the connector could affect proper operation of the oxygen sensor. Take care when handling the oxygen sensor. Do not drop the oxygen sensor.

2. Disconnect the oxygen sensor connector.

Notice: The oxygen sensor may be difficult to remove when engine temperature is below 48°C (120°F). Excessive force may damage threads in the exhaust manifold.

3. Carefully remove the oxygen sensor from the exhaust manifold.

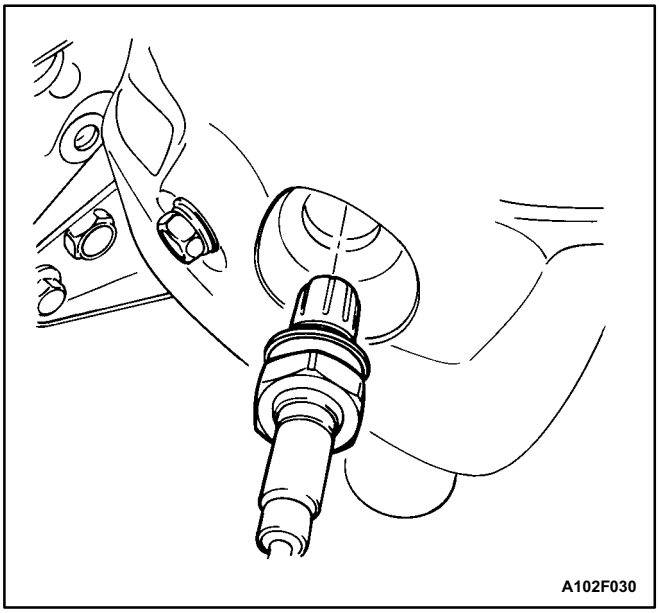
A102F030

Installation Procedure

Important: A special antiseize compound is used on the oxygen sensor threads. This compound consists of a liquid graphite and glass beads. The graphite will burn away, but the glass beads will remain, making the sensor easier to remove. New or serviced sensors will already have the compound applied to the threads. If a sensor is removed from any engine and is to be reinstalled, the threads must have an antiseize compound applied before reinstallation.

1. Coat the threads of the oxygen sensor with an antiseize compound, if needed.
2. Install the oxygen sensor into the exhaust manifold.

   Tighten

   Tighten the oxygen sensor to 41 N•m (30 lb•ft).
3. Connect the oxygen sensor connector.
4. Connect the negative battery cable.

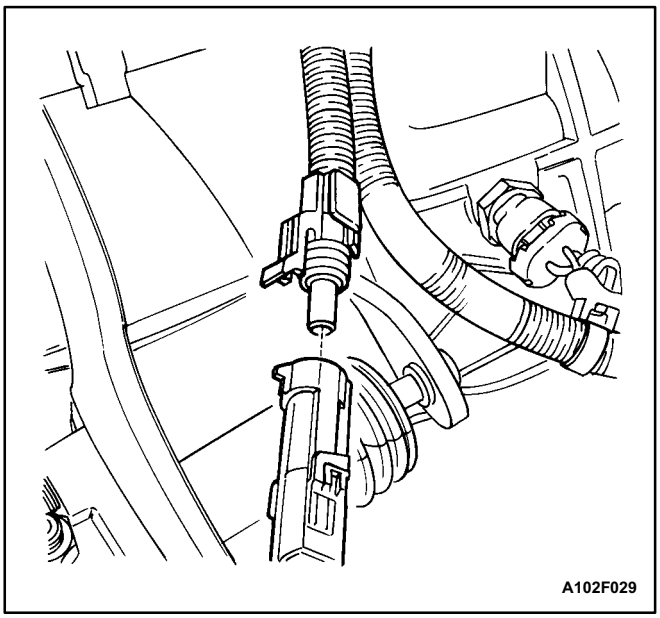

OXYGEN SENSOR (O2S 1) - 2.2L DOHC

Removal Procedure

1. Disconnect the negative battery cable.

Notice: The oxygen sensor (O2S 1) uses a permanently attached pigtail and connector. This pigtail should not be removed from the O2S 1. Damage or removal of the pigtail or the connector could affect proper operation of the O2S 1. Take care when handling the O2S 1. Do not drop the O2S 1.

2. Disconnect the O2S 1 connector.

Notice: The oxygen sensor may be difficult to remove when engine temperature is below 48°C (118°F). Excessive force may damage threads in the exhaust manifold.

3. Carefully remove the O2S 1 from the exhaust manifold.

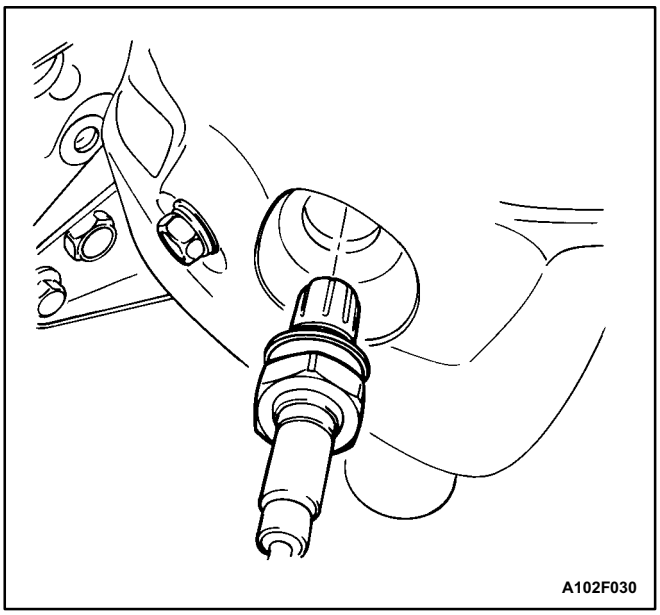

Installation Procedure

Important: A special anti seize compound is used on the oxygen sensor threads. This compound consists of a liquid graphite and glass beads. The graphite will burn away, but the glass beads will remain, making the sensor easier to remove. New or serviced sensors will already have the compound applied to the threads. If a sensor is removed from any engine and is to be reinstalled, the threads must have an antiseize compound applied before reinstallation.

1. Coat the threads of the O2S 1 with an antiseize compound, if needed.
2. Install the O2S 1 into the exhaust manifold.

   Tighten

   Tighten the oxygen sensor to 41 N•m (30 lb•ft).
3. Connect the O2S 1 connector.
4. Connect the negative battery cable.

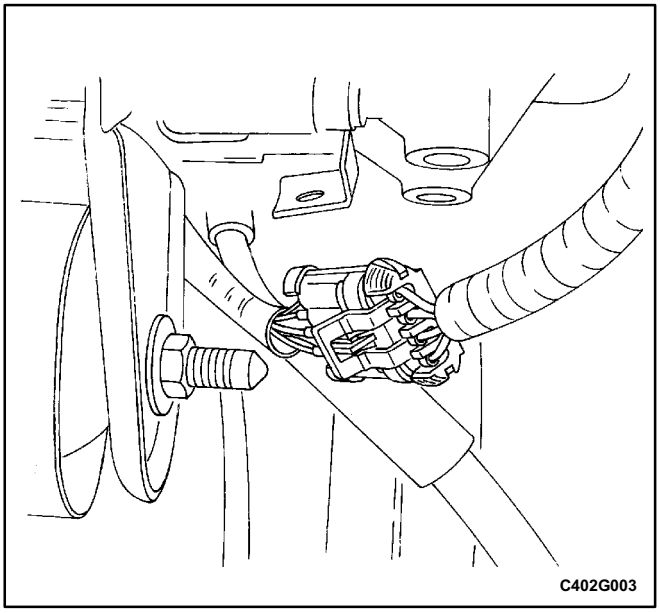

HEATED OXYGEN SENSOR (HO2S 2) - 2.2L DOHC

Removal Procedure

1. Disconnect the negative battery cable.
2. Disconnect the electrical connector.

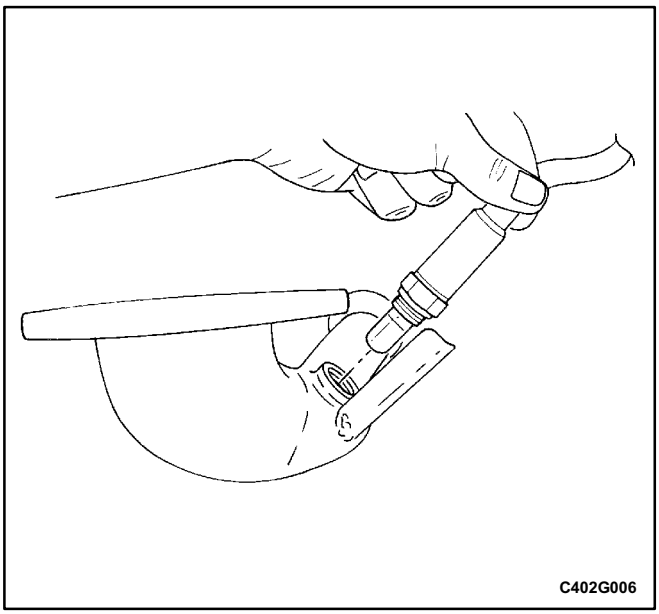

3. Remove the heated oxygen sensor.

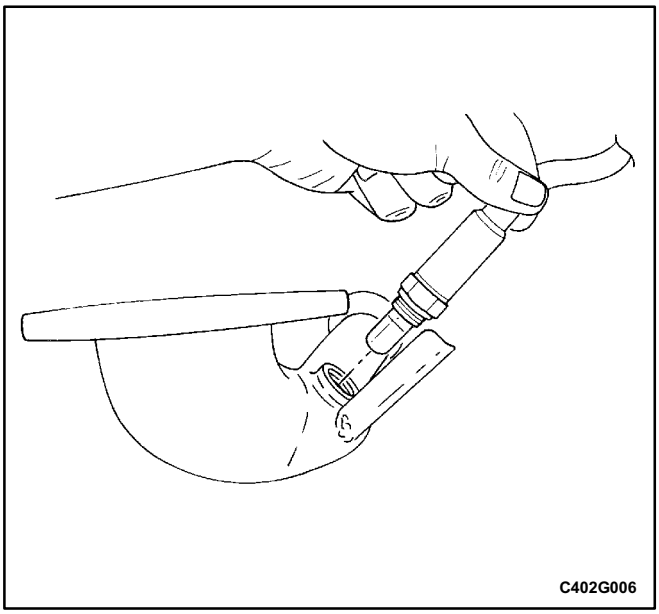

Installation Procedure

1. Install the heated oxygen sensor.

Tighten

Tighten the heated oxygen sensor to 41 N•m (30 lb•ft).

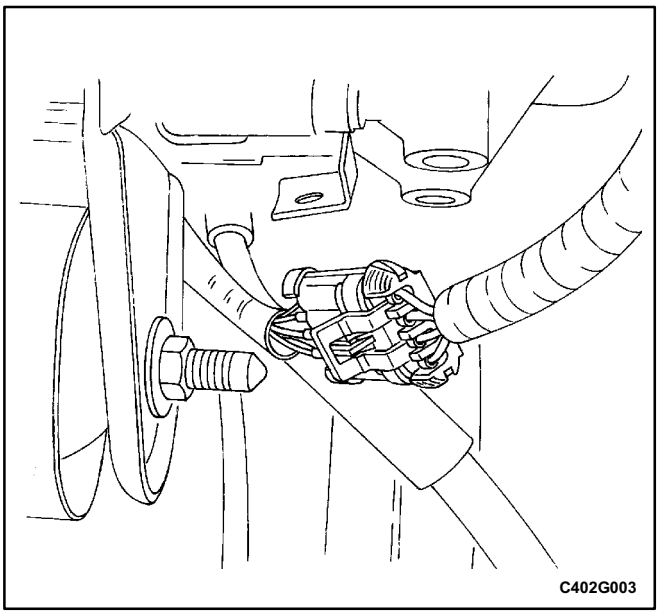

2. Connect the electrical connector.
3. Connect the negative battery cable.

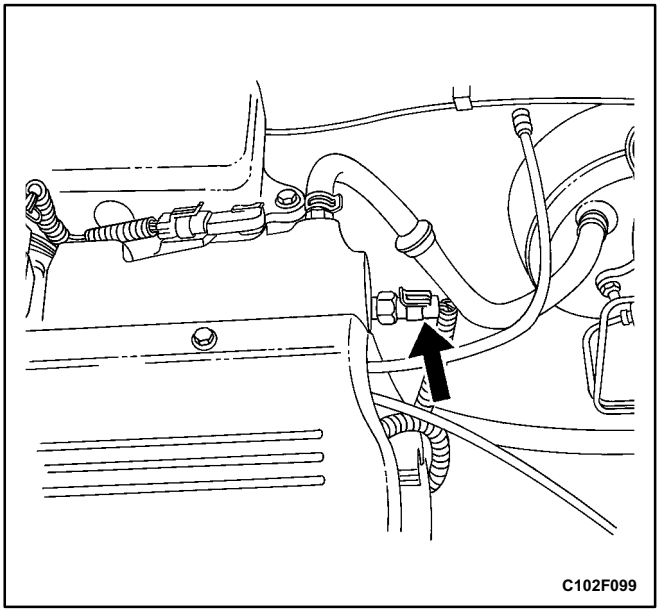

MANIFOLD AIR TEMPERATURE SENSOR (TYPICAL)

Removal Procedure

1. Disconnect the negative battery cable.
2. Disconnect the manifold air temperature (MAT) sensor connector.
3. Remove the MAT sensor.

Installation Procedure

1. Install the MAT sensor.

   Tighten

   Tighten the manifold air temperature sensor to 20 N•m (15 lb•ft).
2. Connect the MAT connector.
3. Connect the negative battery cable.

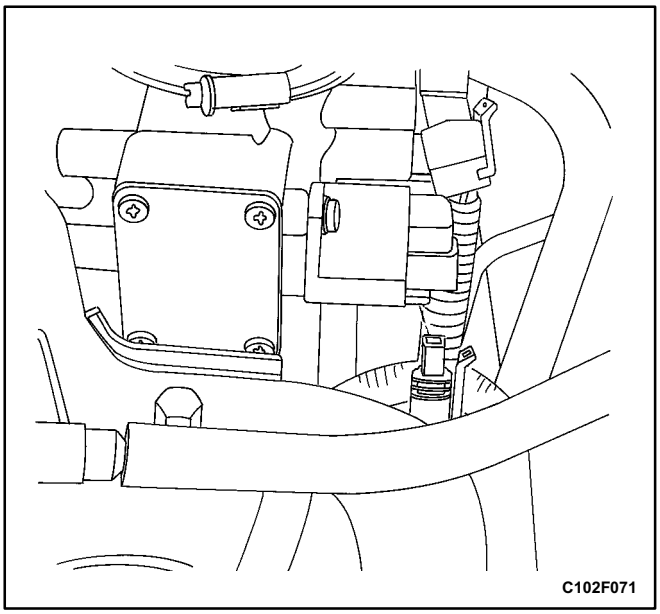

IDLE AIR CONTROL VALVE (TYPICAL)

Removal Procedure

1. Disconnect the negative battery cable.
2. Remove the air intake resonator.
3. Disconnect the idle air control (IAC) valve connector.
4. Remove the IAC valve retaining bolts.

Notice: On IAC valves that have been in service, do not push on the valve pintle. The force required to move the pintle may damage the threads on the worm drive.

5. Remove the IAC valve.

Notice: Do not use methyl ethyl ketone because it can damage the parts.

6. Clean the IAC valve O-ring seal area, the pintle valve seat, and the air passage with a suitable fuel system cleaner.

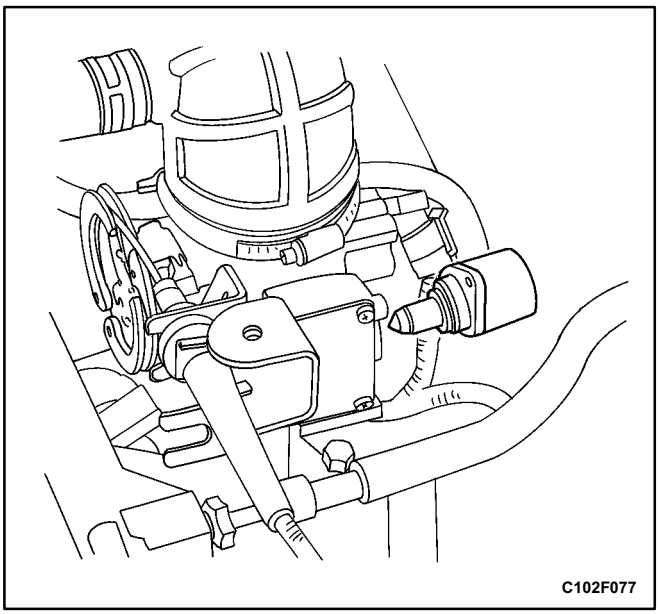

Installation Procedure

Important: If installing a new IAC valve, be sure to replace it with an identical part. The IAC valve pintle shape and diameter are designed for the specific application. Measure the distance between the tip of the IAC valve pintle and the mounting flange. If the distance is greater than 28 mm (1.1 inches), use finger pressure to slowly retract the pintle. The force required to retract the pintle will not damage the IAC valve. The purpose of the 28 mm (1.1 inch) setting is to prevent the IAC pintle from bottoming out on the pintle seat. This 28 mm (1.1 inch) setting is also an adequate setting for controlled idle on a restart.

1. Lubricate a new O-ring with engine oil. Install the new O-ring onto the valve.
2. Install the IAC valve into the throttle body.

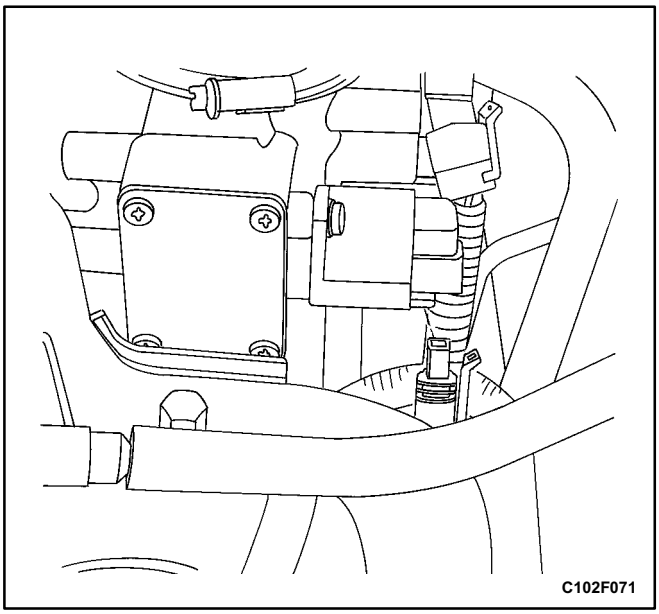

3. Install the IAC valve retaining bolts.

   Tighten

   Tighten the idle air control valve retaining bolts to 3 N•m (27 lb•in).
4. Connect the IAC valve connector.
5. Install the air intake resonator.
6. Connect the negative battery cable.
7. Start the engine and check for the proper idle speed.

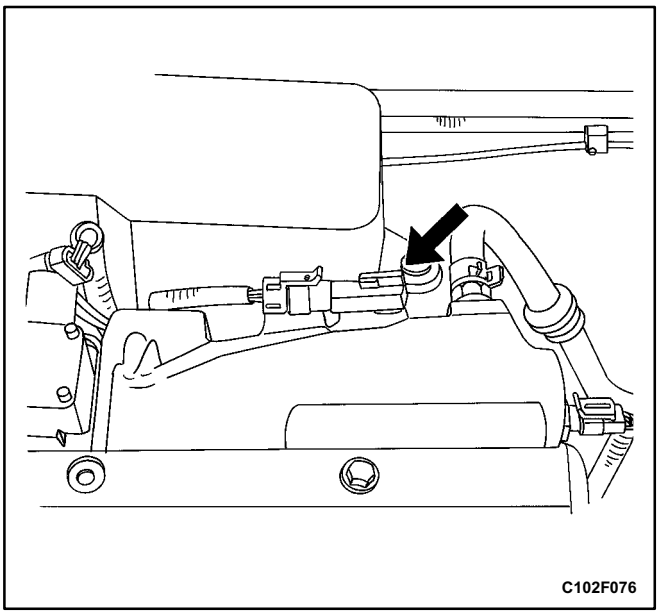

MANIFOLD ABSOLUTE PRESSURE SENSOR (SOHC)

Removal Procedure

1. Disconnect the negative battery cable.
2. Disconnect the vacuum hose from the manifold absolute pressure (MAP) sensor.
3. Disconnect the MAP connector.
4. Remove the MAP sensor mounting bolt and the MAP sensor.

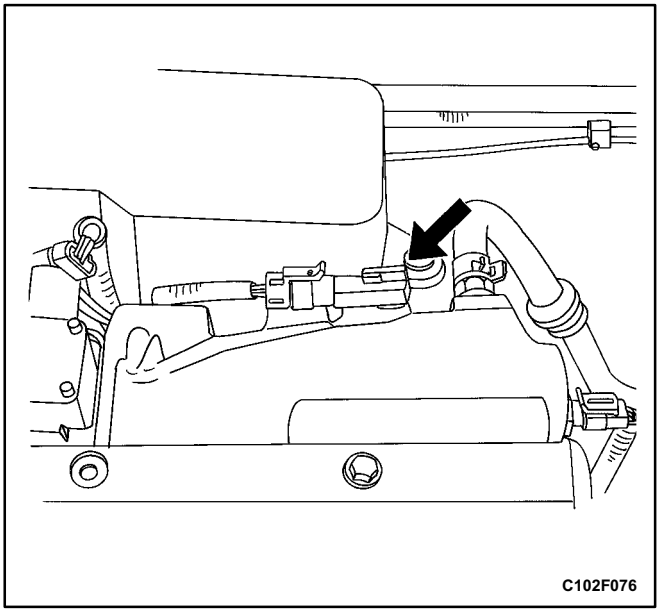

Installation Procedure

1. Insert the MAP sensor into its mounting.
2. Install the bolt through the MAP sensor mounting.

   Tighten

   Tighten the manifold absolute pressure sensor retaining bolt to 10 N•m (89 lb•in).
3. Connect the MAP sensor connector.
4. Connect the vacuum hose to the MAP sensor.
5. Connect the negative battery cable.

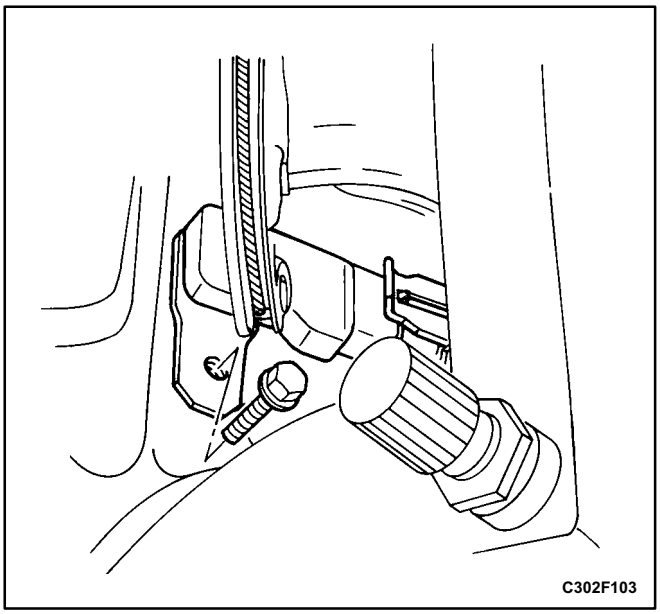

MANIFOLD ABSOLUTE PRESSURE SENSOR (DOHC)

Removal Procedure

1. Disconnect the negative battery cable.
2. Remove the manifold absolute pressure (MAP) sensor bolt.

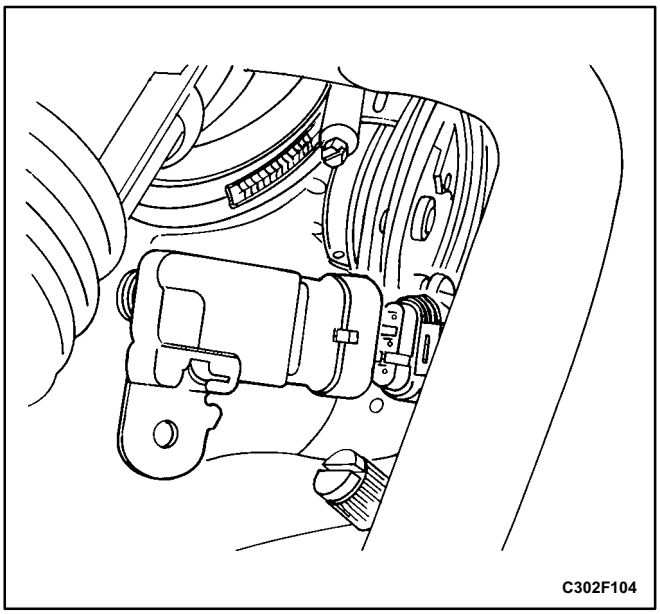

3. Remove the MAP sensor up and clear of the intake manifold recess.
4. Disconnect the MAP sensor connector.

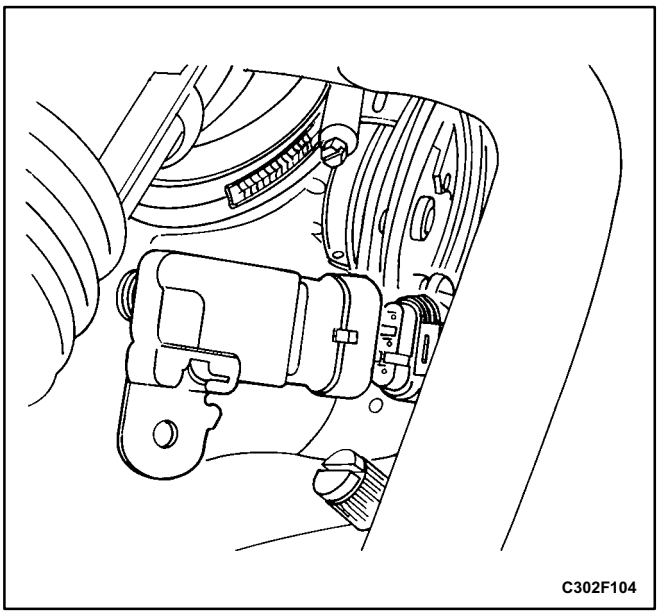
C302F104

Installation Procedure

1. Connect the MAP sensor connector to the MAP sensor.
2. Install the MAP sensor into the intake manifold.

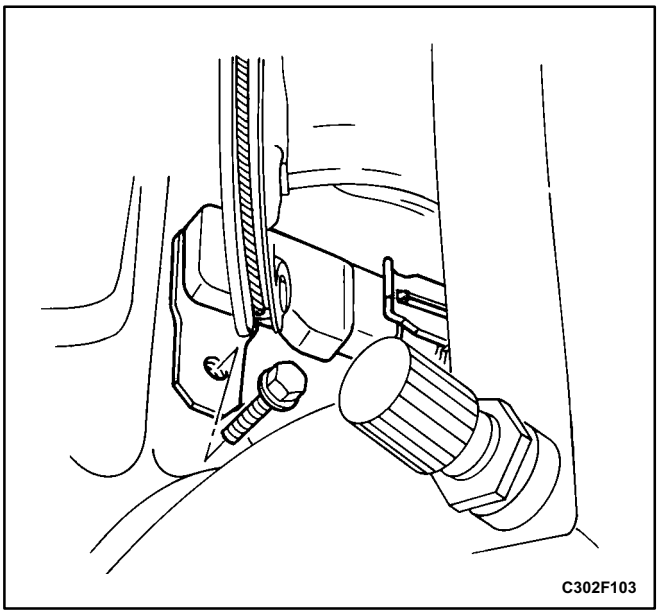
C302F103

3. Install the MAP sensor retaining bolt.

   Tighten

   Tighten the MAP sensor retaining bolt to 10 N•m (89 lb•in).
4. Connect the negative battery cable.

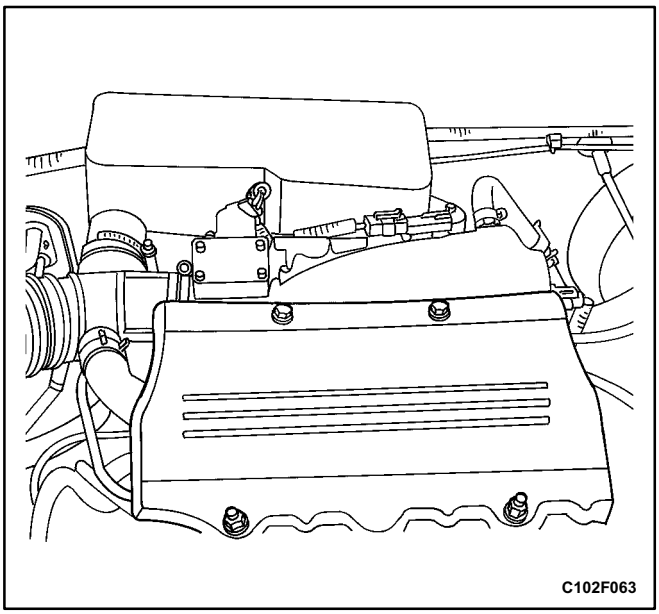
C102F063

EXHAUST GAS RECIRCULATION VALVE (SOHC)

Removal Procedure

1. Remove the bolts and the fuel injector cover.
2. Remove the air intake tube and resonator.
3. Disconnect the vacuum hose from the exhaust gas recirculation (EGR) valve.
4. Remove the fuel rail. Refer to „Fuel Rail and Injectors (SOHC)” in this section.

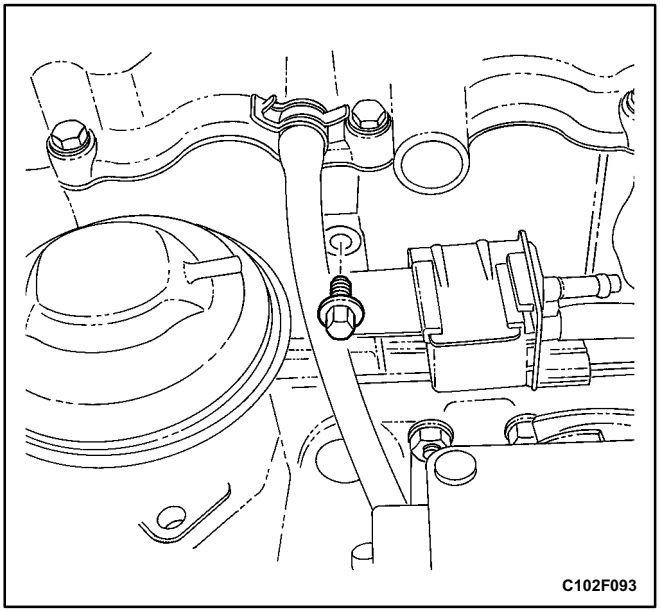

5. Remove the canister purge solenoid bracket bolts and reposition the bracket.
6. Remove the bolts and the EGR valve.

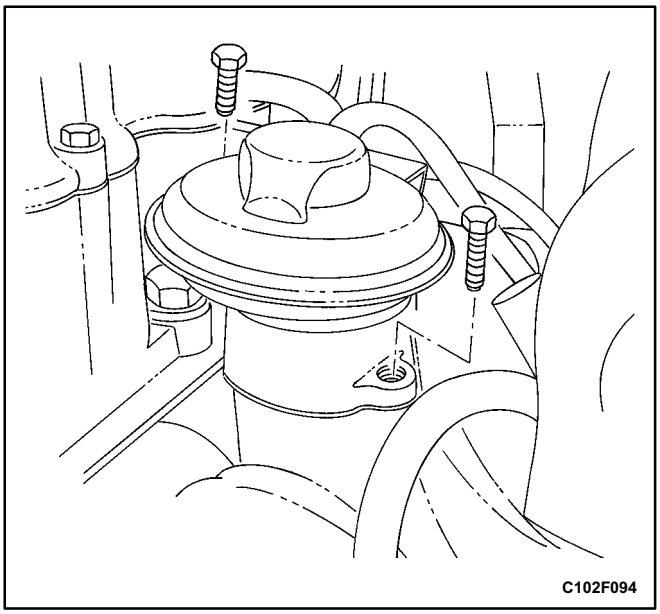

Installation Procedure

1. Install the EGR valve and the bolts.

Tighten

Tighten the EGR valve bolts to 20 N•m (15 lb•ft).

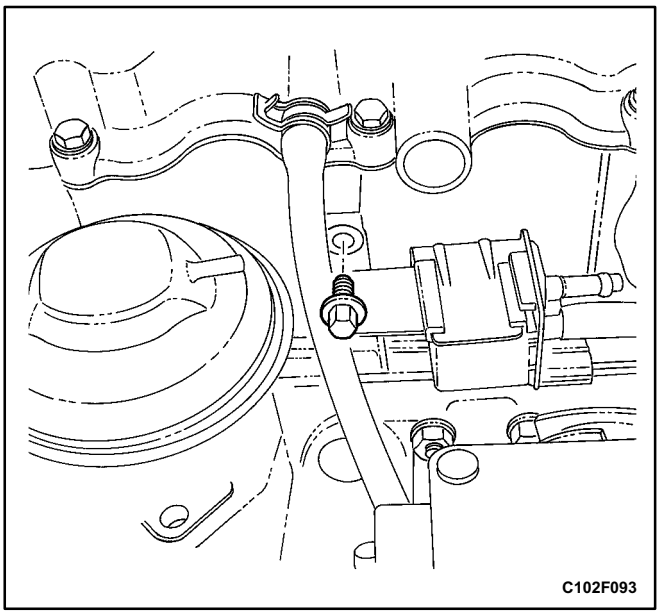

2. Install the canister purge solenoid bracket bolts.

Tighten

Tighten the canister purge solenoid bracket bolts to 5 N•m (44 lb•in).

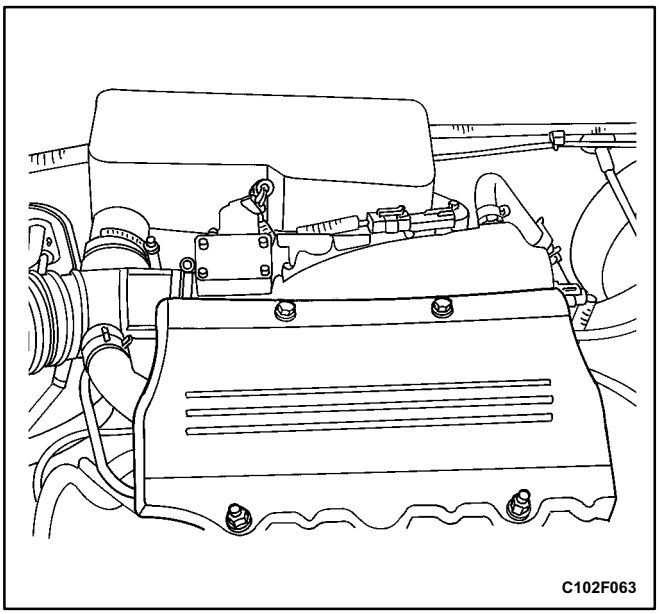

3. Remove the fuel rail. Refer to „Fuel Rail and Injectors (SOHC)" in this section.
4. Connect the vacuum hose to the exhaust gas recirculation (EGR) valve.
5. Install the air intake tube and resonator.
6. Remove the fuel injector cover and the bolts.

Tighten

Tighten the fuel injector cover bolts to 10 N•m (89 lb•in).

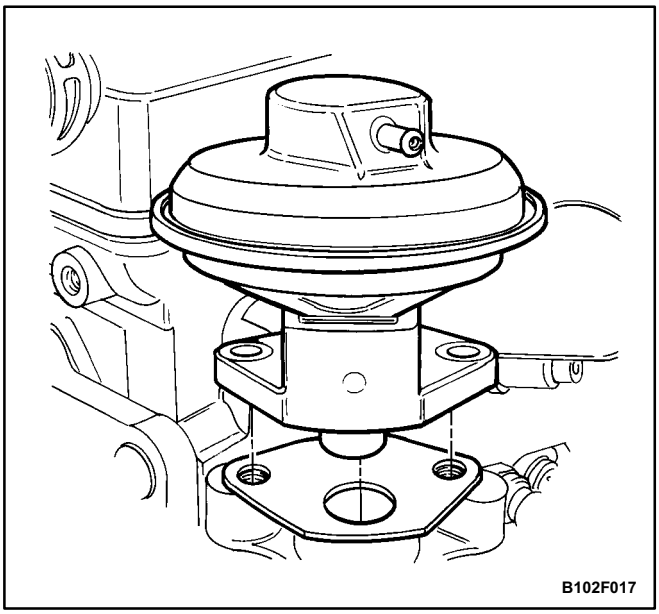

EXHAUST GAS RECIRCULATION VALVE (DOHC)

Removal Procedure

1. Disconnect the negative battery cable.
2. Disconnect the vacuum hose from the exhaust gas recirculation (EGR) valve.
3. Remove the EGR valve retaining bolts.
4. Remove the EGR valve from the DIS ignition coil adapter.

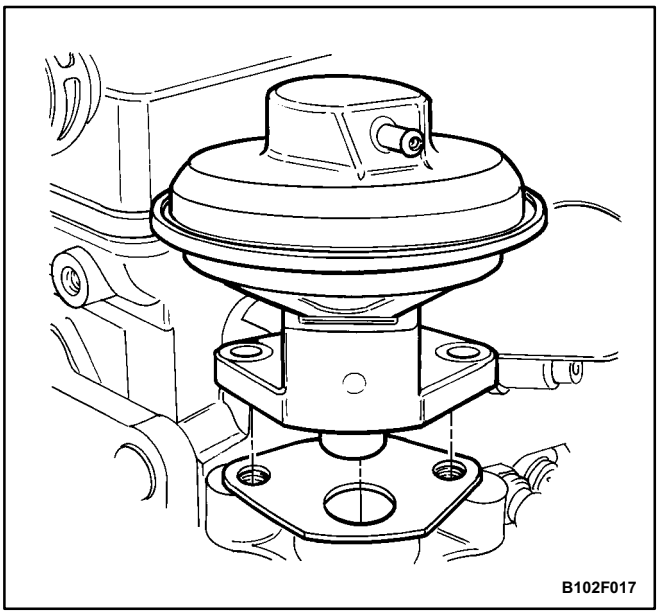

Installation Procedure

1. Clean the DIS ignition coil adapter mating surface.
2. Install a new EGR valve gasket.
3. Install the EGR valve with the bolts.

Tighten

Tighten the exhaust gas recirculation valve retaining bolts to 20 N•m (15 lb•ft).

4. Connect the vacuum hose to the EGR valve.
5. Connect the negative battery cable.

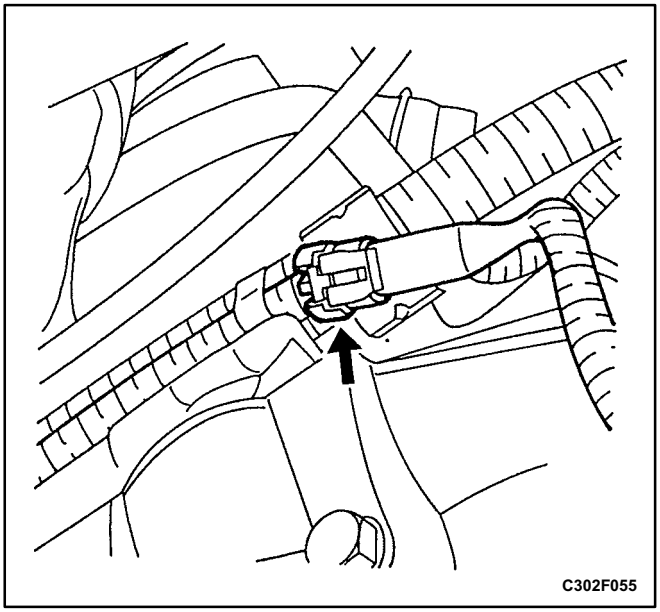

KNOCK SENSOR (DOHC)

Removal Procedure

1. Disconnect the negative battery cable.
2. Raise and suitably support the vehicle.
3. Disconnect electrical connector at the knock sensor.

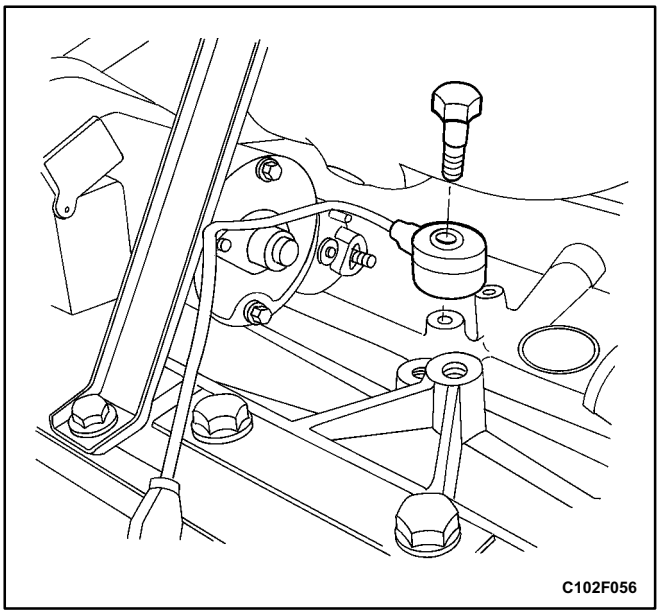

4. Remove the bolt and the knock sensor.

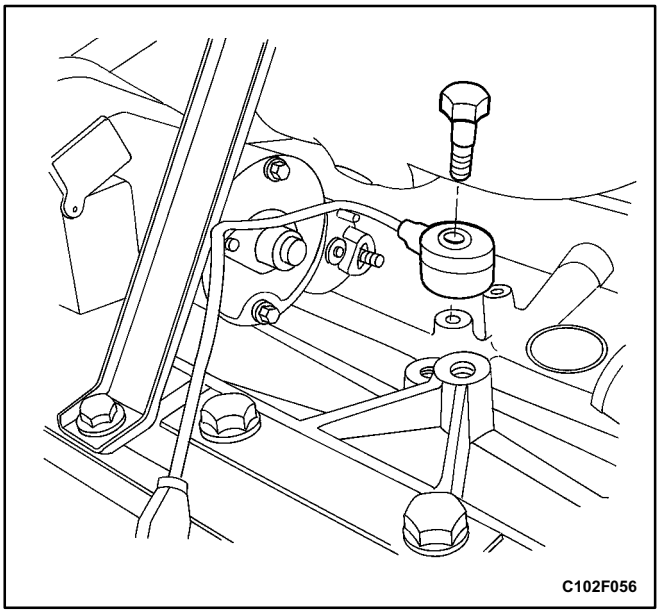

Installation Procedure

1. Install the knock sensor with the bolt.

Tighten

Tighten the knock sensor bolt to 20 N•m (15 lb•ft).

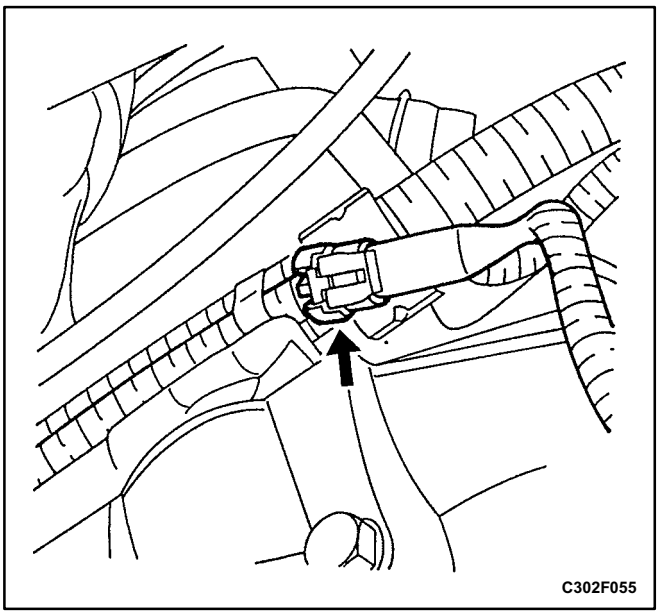

2. Connect the electrical connector at the knock sensor.
3. Lower the vehicle.
4. Connect the negative battery cable.

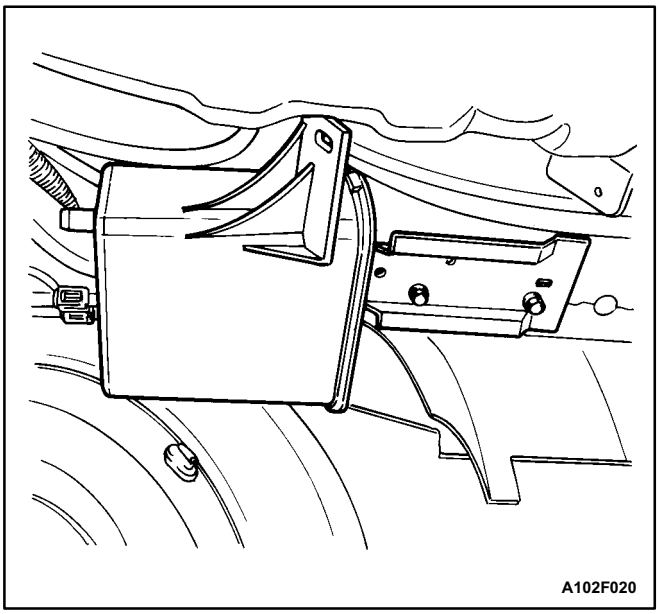

EVAPORATIVE EMISSION CANISTER

Removal Procedure

Caution: Canister and vacuum hoses contain fuel vapors. Do not smoke in the area or permit an open flame.

1. Remove the canister protective cover.
2. Disconnect the canister fuel vapor hoses.
3. Remove the bolt that secures the canister flange to the vehicle.
4. Slide the canister out of the track holder.
5. Remove the canister.

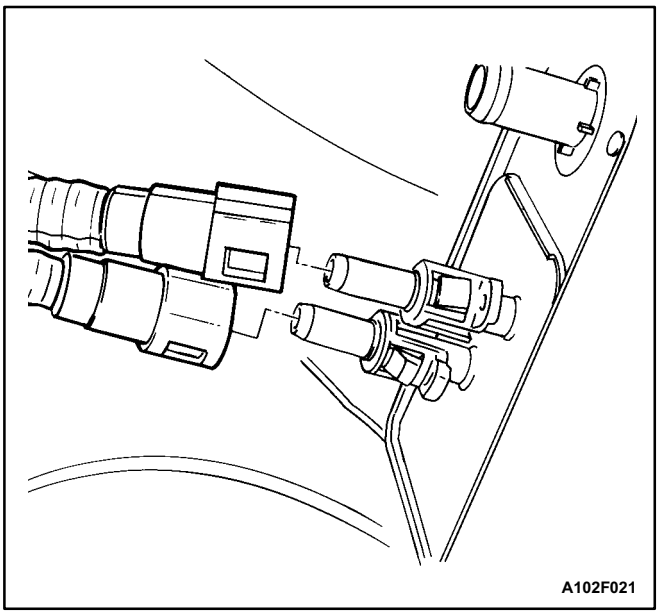

Installation Procedure

1. Insert the canister into the track and slide it into position.
2. Install the canister flange bolt.

   Tighten

   Tighten the evaporative emission canister flange bolt to 20 N•m (15 lb•ft).
3. Connect the canister fuel vapor hoses.
4. Install the canister protective cover.

   Tighten

   Tighten the evaporative emission canister protective cover to 8 N•m (71 lb•in).

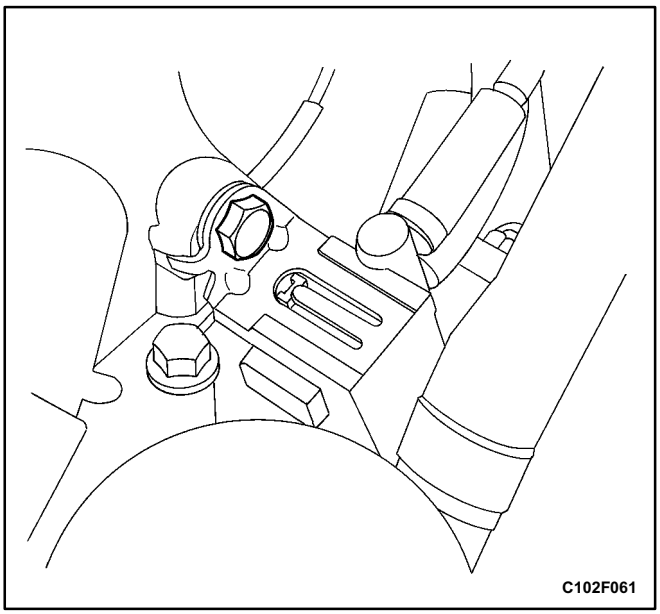

CONTROLLED CANISTER PURGE SOLENOID

Removal Procedure

1. Disconnect the negative battery cable.
2. Disconnect the controlled canister purge (CCP) solenoid connector.
3. Disconnect the vacuum hoses from the CCP solenoid.
4. Remove the CCP solenoid bracket bolt from the intake manifold.
5. Unclip the CCP solenoid from the mounting bracket.

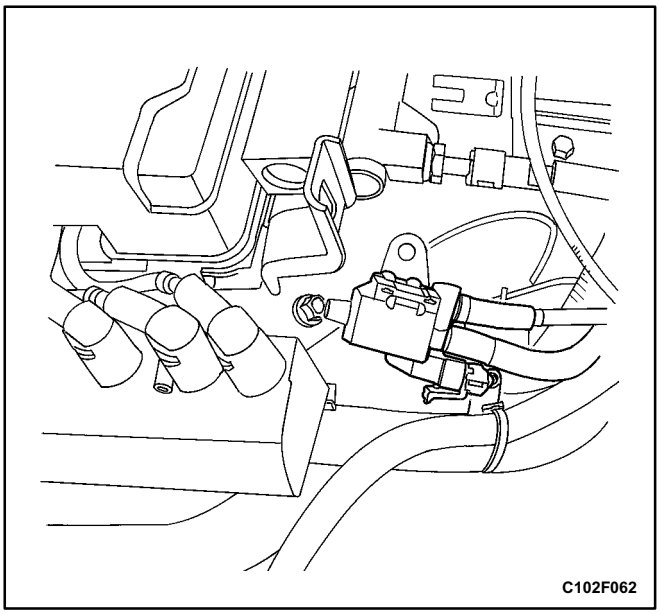

Installation Procedure

1. Attach the CCP solenoid to the mounting bracket.
2. Install the CCP solenoid and the mounting bracket to the intake manifold with the bracket bolt.

   Tighten

   Tighten the controlled canister purge solenoid bracket bolt to 5 N•m (44 lb•in).
3. Connect the vacuum hoses to the CCP solenoid.
4. Connect the CCP solenoid connector.
5. Connect the negative battery cable.

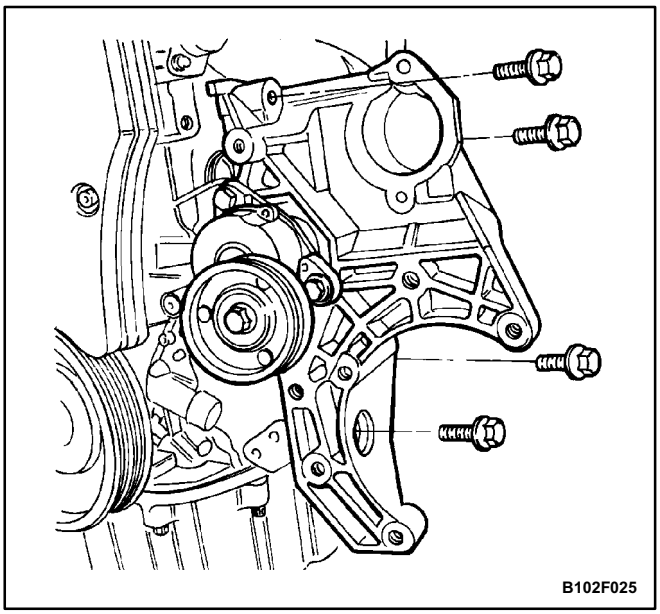

CRANKSHAFT POSITION SENSOR (TYPICAL)

Removal Procedure

1. Disconnect the negative battery cable.
2. Remove the power steering pump, if equipped. Refer to *Section 6B, Power Steering Pump*.
3. Remove the A/C compressor. Refer to *Section 7D, Automatic Temperature Control Heating, Ventilation, and Air Conditioning System*.
4. Remove the rear A/C compressor mounting bracket bolts and the rear A/C compressor mounting bracket.
5. Remove the accessory mounting bracket by removing the bolts.
6. Remove the front timing belt cover on vehicles with an SOHC engine. Refer to *Section 1B, SOHC Engine Mechanical*.

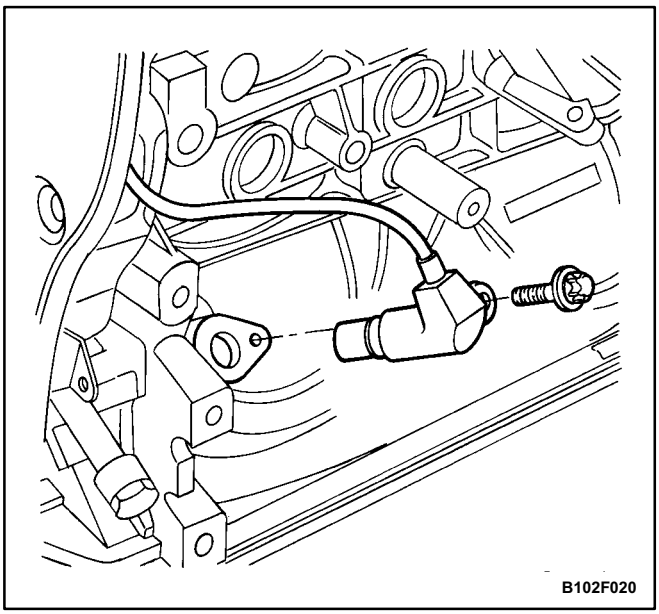

7. Disconnect the crankshaft position sensor (CPS) connector.
8. Remove the CPS retaining bolt.
9. Gently rotate and remove the CPS from the engine block.

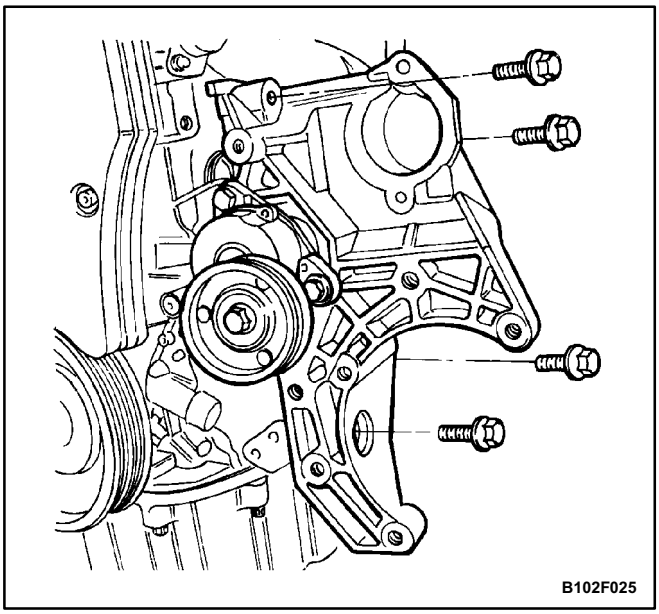

Installation Procedure

1. Insert the CPS into the engine block.
2. Install the CPS retaining bolt.

Tighten

Tighten the crankshaft position sensor retaining bolt to 10 N•m (89 lb•in).

3. Connect the CPS connector.
4. Install the front timing belt cover on vehicles with an SOHC engine. Refer to *Section 1B, SOHC Engine Mechanical.*
5. Install the accessory mounting bracket with the bolts.

Tighten

Tighten the accessory mounting bracket bolts to 35N•m (26 lbft).

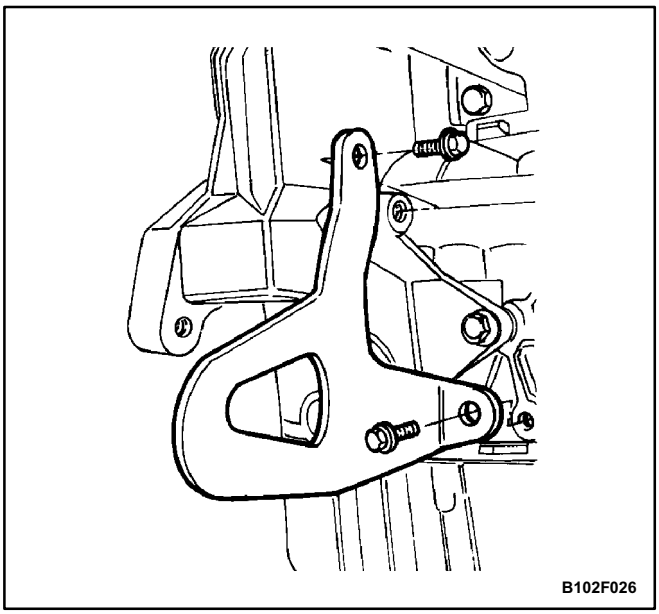

6. Install the rear A/C mounting bracket.

Tighten

Tighten the rear A/C mounting bracket bolts to 35 N•m (26 lb•ft).

7. Install the A/C compressor. Refer to *Section 7D, Automatic Temperature Control Heating, Ventilation, and Air Conditioning System*.
8. Install the power steering pump. Refer to *Section 6B, Power Steering Pump*.
9. Connect the negative battery cable.

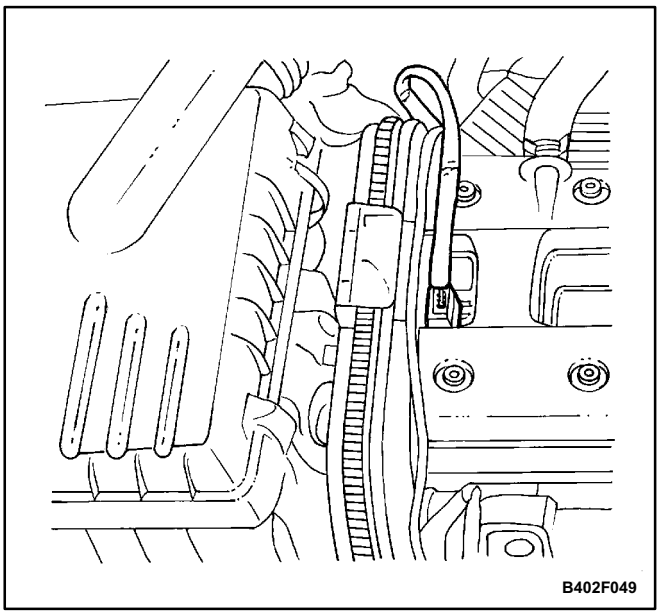

CAMSHAFT POSITION SENSOR

Removal Procedure

1. Disconnect the negative battery cable.
2. Remove the engine cover.
3. Disconnect the sensor electrical connector.

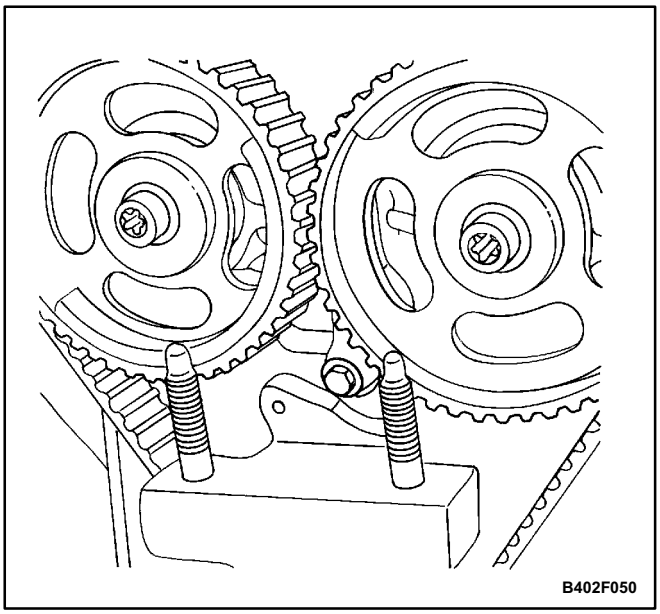

4. Remove the timing belt front cover. Refer to *Section 1C, DOHC Engine Mechanical.*
5. Remove the camshaft position sensor bolts.
6. Remove the camshaft position sensor from the top.

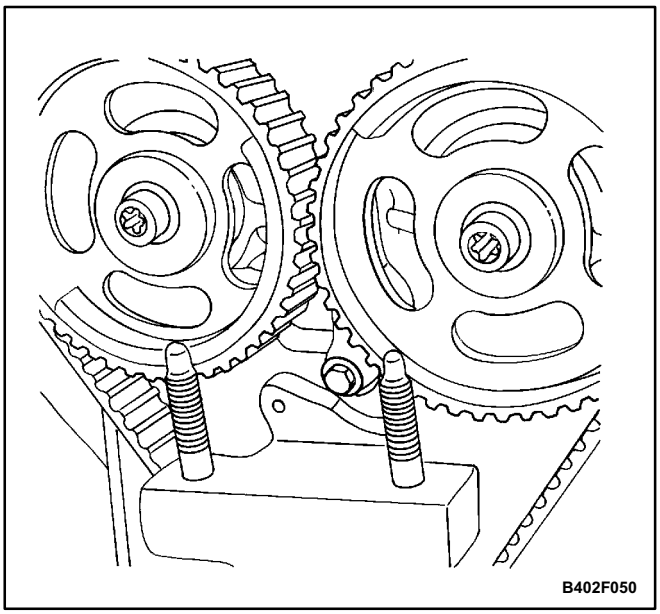

Installation Procedure

1. Install the camshaft position sensor and bolts.

Tighten

Tighten the camshaft position bolts to 12 N•m (106 lb•in).

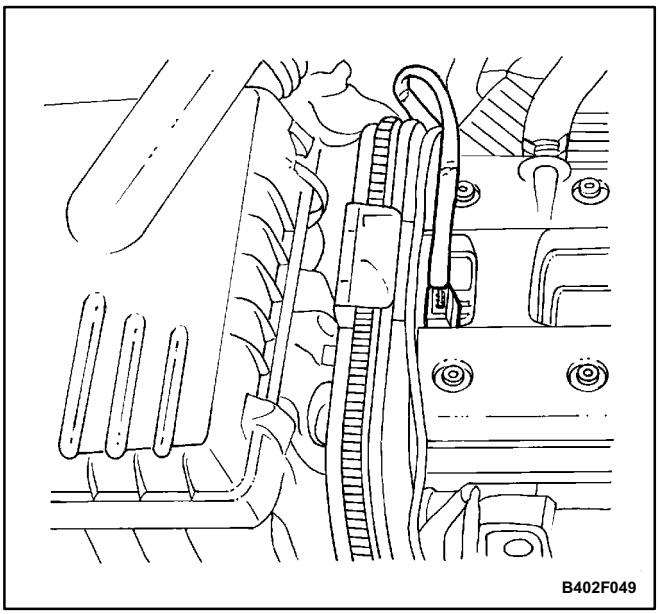

2. Install the timing belt front cover, the crankshaft pulley, the accessory drive belt, and the air filter. Refer to *Section 1C, DOHC Engine Mechanical*.
3. Connect the sensor electrical connector.
4. Install the engine cover.
5. Connect the negative battery cable.

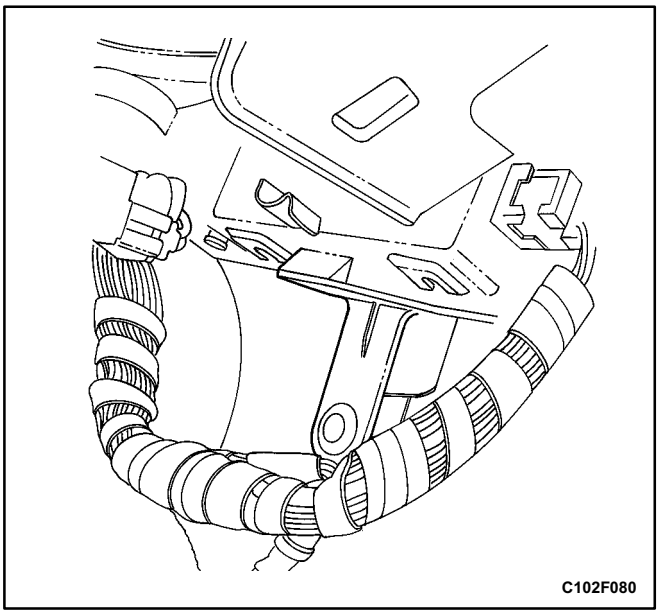

ELECTRONIC CONTROL MODULE (TYPICAL)

Removal Procedure

1. Disconnect the negative battery cable.
2. Remove the passenger side kick panel. Refer to *Section 9G, Interior Trim*.
3. Remove the electronic control module (ECM) bracket trim locks.
4. Pull the ECM down from the ECM mounting base.

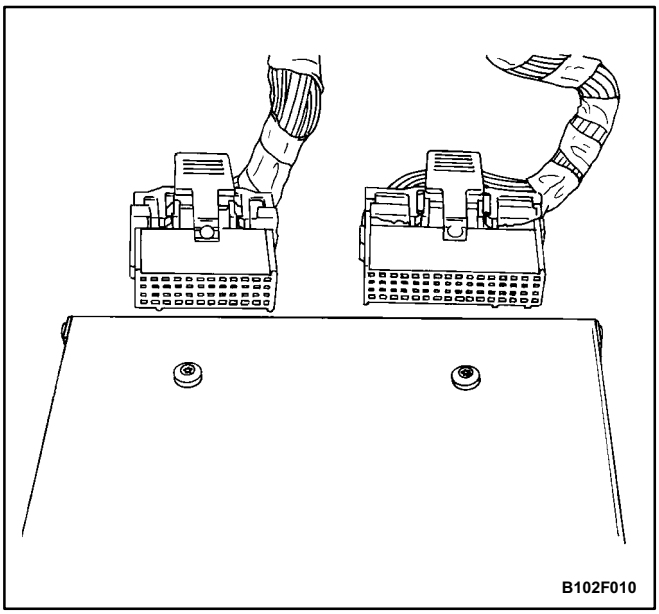

5. Disconnect the ECM connectors from the ECM.

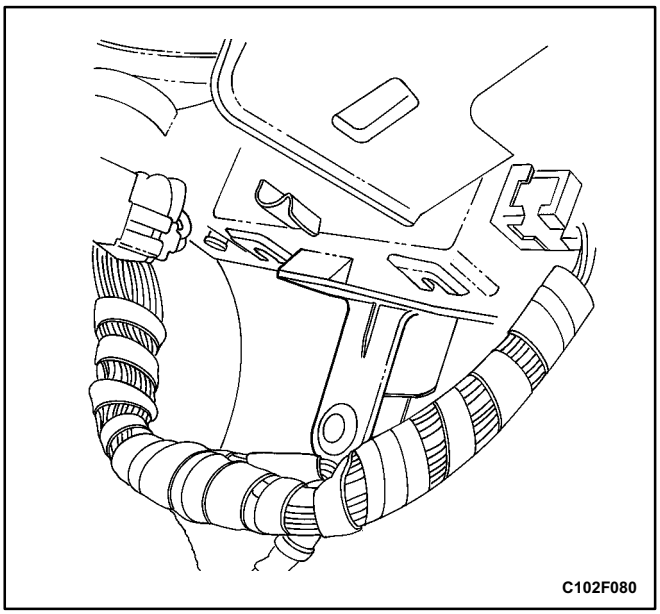

Installation Procedure

1. Connect the ECM connectors to the ECM.
2. Align the ECM into the mounting base.
3. Snap the ECM into its mounting base.
4. Install the ECM trim locks.
5. Install the passenger side kick panel. Refer to *Section 9G, Interior Trim*.
6. Connect the negative battery cable.

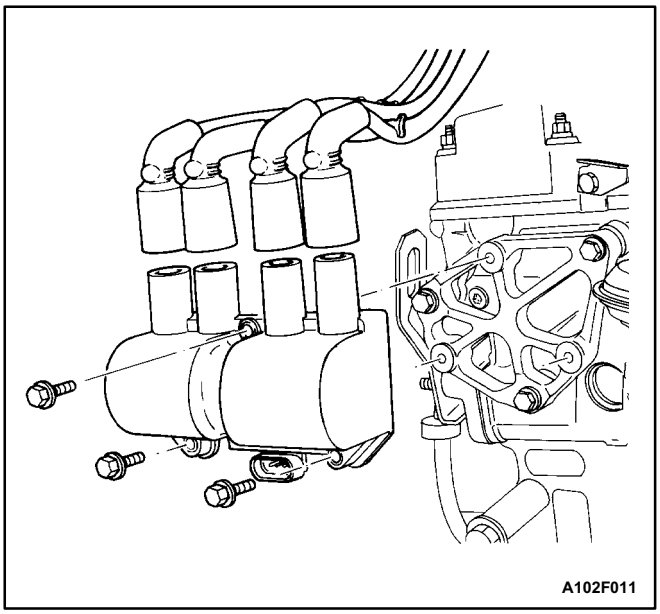

DIRECT IGNITION SYSTEM IGNITION COIL (TYPICAL)

Removal Procedure

1. Disconnect the negative battery cable.
2. Disconnect the direct ignition system (DIS) ignition coil connector.
3. Note the ignition wire location and remove the ignition wires.
4. Remove the DIS ignition coil retaining bolts.
5. Remove the DIS ignition coil.

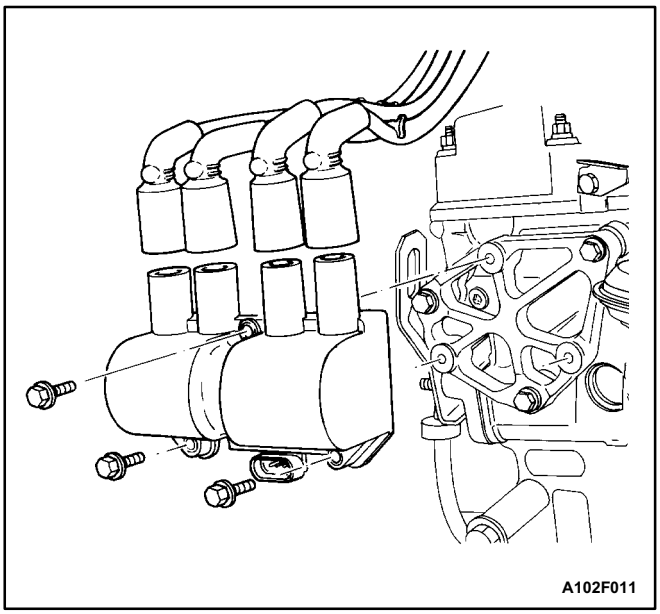

Installation Procedure

1. Install the DIS ignition coil into the mounting location and install the retaining bolts.

   Tighten

   Tighten the DIS ignition coil retaining bolts to 10 N•m (89 lb•in).
2. Connect the DIS ignition coil connector.
3. Install the ignition wires.
4. Connect the negative battery cable.

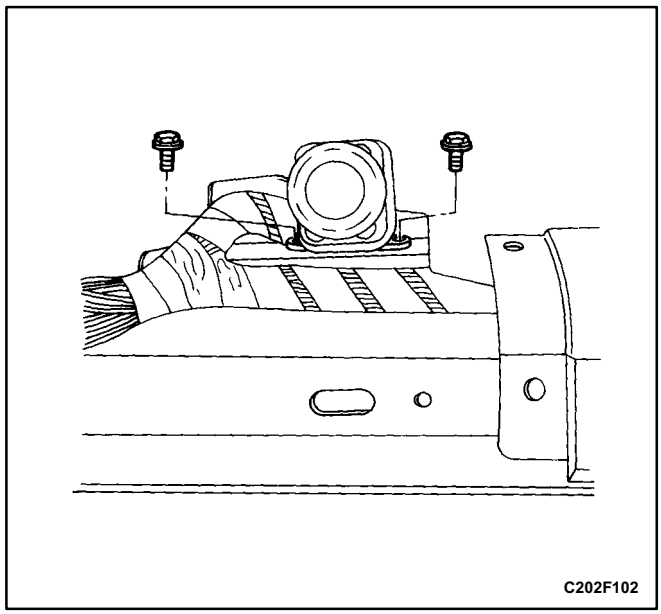

FUEL CUTOFF SWITCH

Removal Procedure

1. Disconnect the negative battery cable.
2. Remove the passenger front rocker trim panel. Refer to *Section 9G, Interior Trim*.
3. Remove the lower B-pillar trim panel. Refer to *Section 9G, Interior Trim.*
4. Reposition the carpet.
5. Remove the fuel cutoff switch mounting bolts.
6. Disconnect the electrical connector at the fuel cutoff switch.

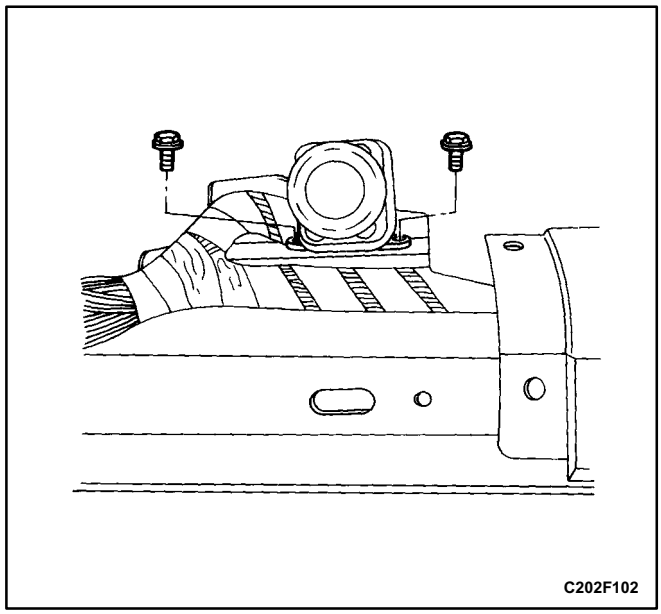

Installation Procedure

1. Connect the electrical connector at the fuel cutoff switch.
2. Install the fuel cutoff switch mounting bolts.

Tighten

Tighten the fuel cutoff switch mounting bolts to 3 N•m (27 lb•in).

Important: The fuel cutoff switch may have to be reset in order to start the vehicle.

3. Reposition the carpet.
4. Install the lower B-pillar trim panel. Refer to *Section 9G, Interior Trim.*
5. Install the passenger front rocker trim panel. Refer to *Section 9G, Interior Trim.*
6. Connect the negative battery cable.

GENERAL DESCRIPTION AND SYSTEM OPERATION

IGNITION SYSTEM OPERATION

This ignition system does not use a conventional distributor and coil. It uses a crankshaft position sensor input to the electronic control module (ECM). The ECM then determines electronic spark timing (EST) and triggers the direct ignition system ignition coil.

This type of distributorless ignition system uses a ``waste spark'' method of spark distribution. Each cylinder is paired with the cylinder that is opposite it (1 4 or 2 3). The spark occurs simultaneously in the cylinder coming up on the compression stroke and in the cylinder coming up on the exhaust stroke. The cylinder on the exhaust stroke requires very little of the available energy to fire the spark plug. The remaining energy is available to the spark plug in the cylinder on the compression stroke.

These systems use the EST signal from the ECM to control the EST. The ECM uses the following information:

- Engine load (manifold pressure or vacuum).
- Atmospheric (barometric) pressure.
- Engine temperature.
- Intake air temperature.
- Crankshaft position.
- Engine speed (rpm).

DIRECT IGNITION SYSTEM IGNITION COIL

The direct ignition system (DIS) ignition coil is mounted near the rear of the camshaft carrier on the single overhead camshaft engine. On the dual overhead camshaft engine, the DIS ignition coil is mounted near the rear of the cylinder head. Each pair of terminals of the DIS ignition coil provides the spark for two spark plugs simultaneously. The DIS ignition coil is not serviceable and must be replaced as an assembly.

CRANKSHAFT POSITION SENSOR

This direct ignition system uses a magnetic crankshaft position sensor. This sensor protrudes through its mount to within approximately 1.3 mm (0.05 inch) of the crankshaft reluctor. The reluctor is a special wheel attached to the crankshaft with 58 slots machined into it, 57 of which are equally spaced in 6 degree intervals. The last slot is wider and serves to generate a „sync pulse." As the crankshaft rotates, the slots in the reluctor change the magnetic field of the sensor, creating an induced voltage pulse. The longer pulse of the 58th slot identifies a specific orientation of the crankshaft and allows the electronic control module (ECM) to determine the crankshaft orientation at all times. The ECM uses this information to generate timed ignition and injection pulses that it sends to the ignition coils and to the fuel injectors.

CAMSHAFT POSITION SENSOR

The camshaft position sensor (CMP) sends a CMP signal to the engine control module (ECM). The ECM uses this signal as a „sync pulse" to trigger the injectors in the proper sequence. The ECM uses the CMP signal to indicate the position of the #1 piston during its power stroke. This allows the ECM to calculate true sequential fuel injection mode of operation. If the ECM detects an incorrect CMP signal while the engine is running, Diagnostic Trouble Code (DTC) P0341 will set. If the CMP signal is lost while the engine is running, the fuel injection system will shift to a calculated sequential fuel injection mode based on the last fuel injection pulse, and the engine will continue to run. As long as the fault is present, the engine can be restarted. It will run in the calculated sequential mode with a 1 in 6 chance of the injector sequence being correct.

IDLE AIR SYSTEM OPERATION

The idle air system operation is controlled by the base idle setting of the throttle body and the idle air control (IAC) valve.

The electronic control module (ECM) uses the IAC valve to set the idle speed dependent on conditions. The ECM uses information from various inputs, such as coolant temperature, manifold vacuum, etc., for the effective control of the idle speed.

FUEL CONTROL SYSTEM OPERATION (2.0L SOHC/DOHC)

The function of the fuel metering system is to deliver the correct amount of fuel to the engine under all operating conditions. The fuel is delivered to the engine by the individual fuel injectors mounted into the intake manifold near each cylinder.

The two main fuel control sensors are the manifold absolute pressure (MAP) sensor and the oxygen (O_2) sensor.

The MAP sensor measures or senses the intake manifold vacuum. Under high fuel demands, the MAP sensor reads a low vacuum condition, such as wide open throttle. The electronic control module (ECM) uses this information to enrich the mixture, thus increasing the fuel injector on time, to provide the correct amount of fuel. When decelerating, the vacuum increases. This vacuum change is sensed by the MAP sensor and read by the ECM, which then decreases the fuel injector on time due to the low fuel demand conditions.

The O_2 sensor is located in the exhaust manifold. The O_2 sensor indicates to the ECM the amount of oxygen in the exhaust gas and the ECM changes the air/fuel ratio to the engine by controlling the fuel injectors. The best air/fuel ratio to minimize exhaust emissions is 14.7 to 1, which allows the catalytic converter to operate most efficiently. Because of the constant measuring and adjusting of the air/fuel ratio, the fuel injection system is called a „closed loop" system.

The ECM uses voltage inputs from several sensors to determine how much fuel to provide to the engine. The

fuel is delivered under one of several conditions, called ``modes."

Starting Mode

When the ignition is turned ON, the ECM turns the fuel pump relay on for 2 seconds. The fuel pump then builds fuel pressure. The ECM also checks the coolant temperature sensor (CTS) and the throttle position sensor (TPS) and determines the proper air/fuel ratio for starting the engine. This ranges from 1.5 to 1 at −36°C (−33°F) coolant temperature to 14.7 to 1 at 94°C (201°F) coolant temperature. The ECM controls the amount of fuel delivered in the starting mode by changing how long the fuel injector is turned on and off. This is done by ``pulsing" the fuel injectors for very short times.

Clear Flood Mode

If the engine floods with excessive fuel, it may be cleared by pushing the accelerator pedal down all the way. The ECM will then completely turn off the fuel by eliminating any fuel injector signal. The ECM holds this injector rate as long as the throttle stays wide open and the engine is below approximately 400 rpm. If the throttle position becomes less than approximately 80 percent, the ECM returns to the starting mode.

Run Mode

The run mode has two conditions called ``open loop" and ``closed loop."

Open Loop

When the engine is first started and it is above 400 rpm, the system goes into ``open loop" operation. In ``open loop," the ECM ignores the signal from the oxygen sensor and calculates the air/fuel ratio based on inputs from the CTS and the MAP sensor. The ECM stays in „open loop” until the following conditions are met:

- The O_2 sensor has a varying voltage output, showing that it is hot enough to operate properly.
- The CTS is above a specified temperature.
- A specific amount of time has elapsed after starting the engine.

Closed Loop

The specific values for the above conditions vary with different engines and are stored in the electronically erasable programmable read only memory (EEPROM). When these conditions are met, the system goes into „closed loop” operation. In „closed loop,” the ECM calculates the air/fuel ratio (fuel injector ontime) based on the signal from the oxygen sensor. This allows the air/fuel ratio to stay very close to 14.7 to 1.

Acceleration Mode

The ECM responds to rapid changes in throttle position and airflow and provides extra fuel.

Deceleration Mode

The ECM responds to changes in throttle position and airflow and reduces the amount of fuel. When deceleration is very fast, the ECM can cut off fuel completely for short periods of time.

Battery Voltage Correction Mode

When battery voltage is low, the ECM can compensate for a weak spark delivered by the ignition module by using the following methods:

- Increasing the fuel injector pulse width.
- Increasing the idle speed rpm.
- Increasing the ignition dwell time.

Fuel Cut-Off Mode

No fuel is delivered by the fuel injectors when the ignition is off. This prevents dieseling or engine runon. Also, the fuel is not delivered if there are no reference pulses received from the CPS. This prevents flooding.

FUEL CONTROL SYSTEM OPERATION (2.2L DOHC)

The function of the fuel metering system is to deliver the correct amount of fuel to the engine under all operating conditions. The fuel is delivered to the engine by the individual fuel injectors mounted into the intake manifold near each cylinder.

The main fuel control sensors are the manifold absolute pressure (MAP) sensor, the oxygen (O2S 1) sensor, and the heated oxygen sensor (HO2S 2).

The MAP sensor measures or senses the intake manifold vacuum. Under high fuel demands, the MAP sensor reads a low vacuum condition, such as wide open throttle. The engine control module (ECM) uses this information to enrich the mixture, thus increasing the fuel injector ontime, to provide the correct amount of fuel. When decelerating, the vacuum increases. This vacuum change is sensed by the MAP sensor and read by the ECM, which then decreases the fuel injector ontime due to the low fuel demand conditions.

The O2S 1 sensor is located in the exhaust manifold. The HO2S 2 is located in the exhaust pipe. The oxygen sensors indicate to the ECM the amount of oxygen in the exhaust gas, and the ECM changes the air/fuel ratio to the engine by controlling the fuel injectors. The best air/fuel ratio to minimize exhaust emissions is 14.7 to 1, which allows the catalytic converter to operate most efficiently. Because of the constant measuring and adjusting of the air/fuel ratio, the fuel injection system iscalled a „closed loop” system.

The ECM uses voltage inputs from several sensors to determine how much fuel to provide to the engine. The fuel is delivered under one of several conditions, called ``modes."

Starting Mode

When the ignition is turned ON, the ECM turns the fuel pump relay on for 2 seconds. The fuel pump then builds fuel pressure. The ECM also checks the engine coolant temperature sensor (CTS) and the throttle position sensor and determines the proper air/fuel ratio for starting the engine. This ranges from 1.5 to 1 at −36°C (−33°F) coolant temperature to 14.7 to 1 at 94°C (201°F) coolant temperature. The ECM controls the amount of fuel delivered in the starting mode by

changing how long the fuel injector is turned on and off. This is done by ``pulsing'' the fuel injectors for very short times.

Clear Flood Mode

If the engine floods with excessive fuel, it may be cleared by pushing the accelerator pedal down all the way. The ECM will then completely turn off the fuel by eliminating any fuel injector signal. The ECM holds this injector rate as long as the throttle stays wide open and the engine is below approximately 400 rpm. If the throttle position becomes less than approximately 80 percent, the ECM returns to the starting mode.

Run Mode

The run mode has two conditions called ``open loop'' and ``closed loop.''

Open Loop

When the engine is first started and it is above 400 rpm, the system goes into ``open loop'' operation. In ``open loop,'' the ECM ignores the signal from the O2S 1 and calculates the air/fuel ratio based on inputs from the CTS sensor and the MAP sensor. The ECM stays in „open loop” until the following conditions are met:

- The O2S 1 has a varying voltage output, showing that it is hot enough to operate properly.
- The CTS sensor is above a specified temperature.
- A specific amount of time has elapsed after starting the engine.

Closed Loop

The specific values for the above conditions vary with different engines and are stored in the electronically erasable programmable read only memory (EEPROM). When these conditions are met, the system goes into „closed loop” operation. In „closed loop,” the ECM calculates the air/fuel ratio (fuel injector ontime) based on the signals from the oxygen sensors. This allows the air/fuel ratio to stay very close to 14.7 to 1.

Acceleration Mode

The ECM responds to rapid changes in throttle position and airflow and provides extra fuel.

Deceleration Mode

The ECM responds to changes in throttle position and airflow and reduces the amount of fuel. When deceleration is very fast, the ECM can cut off fuel completely for short periods of time.

Battery Voltage Correction Mode

When battery voltage is low, the ECM can compensate for a weak spark delivered by the ignition module by using the following methods:

- Increasing the fuel injector pulse width.
- Increasing the idle speed rpm.
- Increasing the ignition dwell time.

Fuel CutOff Mode

No fuel is delivered by the fuel injectors when the ignition is off. This prevents dieseling or engine run-on. Also, the fuel is not delivered if there are no reference pulses received from the CPS sensor. This prevents flooding.

EVAPORATIVE EMISSION CONTROL SYSTEM OPERATION

The basic evaporative emission (EVAP) control system used is the charcoal canister storage method. This method transfers fuel vapor from the fuel tank to an activated carbon (charcoal) storage canister which holds the vapors when the vehicle is not operating. When the engine is running, the fuel vapor is purged from the carbon element by intake airflow and consumed in the normal combustion process.

Gasoline vapors from the fuel tank flow into the tube labeled TANK. These vapors are absorbed into the carbon. The canister is purged by electronic control module (ECM) when the engine has been running for a specified amount of time. Air is drawn into the canister and mixed with the vapor. This mixture is then drawn into the intake manifold.

The ECM supplies a ground to energize the controlled canister purge solenoid valve. This valve is pulse width modulated (PWM) or turned on and off several times a second. The controlled canister purge PWM duty cycle varies according to operating conditions determined by mass airflow, fuel trim, and intake air temperature.

Poor idle, stalling, and poor driveability can be caused by the following conditions:

- An inoperative controlled canister purge valve.
- A damaged canister.
- Hoses that are split, cracked, or not connected to the proper tubes.

EVAPORATIVE EMISSION CANISTER

The evaporative emission canister is an emission control device containing activated charcoal granules. The evaporative emission canister is used to store fuel vapors from the fuel tank. Once certain conditions are met, the electronic control module (ECM) activates the controlled canister purge solenoid, allowing the fuel vapors to be drawn into the engine cylinders and burned.

POSITIVE CRANKCASE VENTILATION CONTROL SYSTEM OPERATION

A positive crankcase ventilation (PCV) control system is used to provide complete use of the crankcase vapors. Fresh air from the air cleaner is supplied to the crankcase. The fresh air is mixed with blowby gases which is then passed through a vacuum hose into the intake manifold.

Periodically inspect the hoses and the clamps. Replace any crankcase ventilation components as required.

A restricted or plugged PCV hose may cause the following conditions:

- Rough idle.
- Stalling or low idle speed.
- Oil leaks.
- Oil in the air cleaner.
- Sludge in the engine.

A leaking PCV hose may cause the following conditions:

- Rough idle.
- Stalling.
- High idle speed.

COOLANT TEMPERATURE SENSOR

The coolant temperature sensor (CTS) is a thermistor (a resistor which changes value based on temperature) mounted in the engine coolant stream. Low coolant temperature produces a high resistance (100,000 ohms at −40°C [−40°F]) while high temperature causes low resistance (70 ohms at 130°C [266°F]).

The electronic control module (ECM) supplies 5 volts to the coolant sensor through a resistor in the ECM and measures the change in voltage. The voltage will be high when the engine is cold, and low when the engine is hot. By measuring the change in voltage, the ECM can determine the coolant temperature. The engine coolant temperature affects most of the systems that the ECM controls. A failure in the coolant sensor circuit should set a diagnostic trouble code 14 or 15. Remember, these diagnostic trouble codes indicate a failure in the coolant temperature circuit, so proper use of the chart will lead either to repairing a wiring problem or to replacing the sensor to repair a problem properly.

THROTTLE POSITION SENSOR

The throttle position sensor (TPS) is a potentiometer connected to the throttle shaft of the throttle body. The TPS electrical circuit consists of a 5volt supply line and a ground line, both provided by the electronic control module (ECM). The ECM calculates the throttle position by monitoring the voltage on this signal line. The TPS output changes as the accelerator pedal is moved, changing the throttle valve angle. At a closed throttle position, the output of the TPS is low, about 0.5 volt. As the throttle valve opens, the output increases so that, at wide open throttle (WOT), the output voltage will be about 5 volts.

The ECM can determine fuel delivery based on throttle valve angle (driver demand). A broken or loose TPS can cause intermittent bursts of fuel from the injector and an unstable idle, because the ECM thinks the throttle is moving. A problem in any of the TPS circuits should set a diagnostic trouble code 21 or 22. Once the diagnostic trouble code is set, the ECM will substitute a default value for the TPS and some vehicle performance will return. A diagnostic trouble code 21 will cause a high idle speed.

OXYGEN SENSOR (2.0L SOHC/DOHC)

The oxygen (O_2) sensor is mounted in the exhaust system where it can monitor the O_2 content of the exhaust gas stream. The oxygen content in the exhaust reacts with the sensor to produce a voltage output. This voltage ranges from approximately 0.1 volt (high O_2 - lean mixture) to 0.9 volt (low O_2 - rich mixture). This voltage can be measured with a digital voltmeter having at least 10 megohms input impedance. Use of standard shop type voltmeters will result in very inaccurate readings.

The electronic control module (ECM) monitors the O_2 sensor output and determines what changes are necessary in the fuel mixture command.

The O_2 sensor circuit sets a diagnostic trouble code 13 when it is open. A constant low voltage in the sensor circuit, indicating a lean mixture, sets a diagnostic trouble code 44. A constant high voltage, indicating a rich mixture, sets a diagnostic trouble code 45. Refer tothe diagnostic trouble code charts for conditions that could cause a lean or a rich system.

CATALYST MONITOR OXYGEN SENSORS (2.2L DOHC)

Threeway catalytic converters are used to control emissions of hydrocarbons (HC), carbon monoxide (CO), and oxides of nitrogen (NOx). The catalyst within the converters promotes a chemical reaction. This reaction oxidizes the HC and CO present in the exhaust gas and converts them into harmless water vapor and carbon dioxide. The catalyst also reduces NOx by converting it to nitrogen. The ECM can monitor this process using the Bank 1 Sensor 1 and Bank 1 Sensor 2 sensors. These sensors produce an output signal which indicates the amount of oxygen present in the exhaust gas entering and leaving the threeway converter. This indicates the catalyst's ability to efficiently convert exhaust gasses. If the catalyst is operating efficiently, the Bank 1 Sensor 1 sensor signals will be more active than the signals produced by the Bank 1 Sensor 2 sensor. The catalyst monitor sensors operate the same way as the fuel control sensors. The sensors' main function is catalyst monitoring, but they also have a limited role in fuel control. If a sensor output indicates a voltage either above or below the 450 mv bias voltage for an extended period of time, the engine control module (ECM) will make a slight adjustment to fuel trim to ensure that fuel delivery is correct for catalyst monitoring.

A problem with the Bank 1 Sensor 1 sensor circuit will set DTC P0131, P0132, P0133 or P0134 depending on the special condition. A problem with the Bank 1 Sensor 2 sensor signal will set DTC P0137, P0138, P0140 or P0141 depending on the special condition.

A fault in the heated oxygen sensor heater element or its ignition feed or ground will result in lower oxygen sensor

response. This may cause incorrect catalyst monitor diagnostic results.

EXHAUST GAS RECIRCULATION VALVE

The exhaust gas recirculation (EGR) system is used on engines equipped with an automatic transaxle to lower oxides of nitrogen (NOX) emission levels caused by high combustion temperature. The main element of the system is the EGR valve operated by vacuum. The EGR valve feeds small amounts of exhaust gas into the intake manifold to decrease combustion temperature. The amount of exhaust gas recirculated is controlled by variations in vacuum and exhaust back pressure. If too much exhaust gas enters, combustion will not take place. For this reason, very little exhaust gas is allowed to pass through the valve, especially at idle.

The EGR valve is usually open under the following conditions:

- Warm engine operation.
- Above idle speed.

Results of Incorrect Operation

Too much EGR flow tends to weaken combustion, causing the engine to run roughly or to stop. With too much EGR flow at idle, cruise, or cold operation, any of the following conditions may occur:

- The engine stops after a cold start.
- The engine stops at idle after deceleration.
- The vehicle surges during cruise.
- Rough idle.

If the EGR valve stays open all the time, the engine may not idle. Too little or no EGR flow allows combustion temperatures to get too high during acceleration and load conditions. This could cause the following conditions:

- Spark knock (detonation).
- Engine overheating.
- Emission test failure.

MANIFOLD AIR TEMPERATURE SENSOR

The manifold air temperature (MAT) sensor is a thermistor, a resistor which changes value based on the temperature of the air entering the engine. Low temperature produces a high resistance (100,000 ohms at −40°C [−40°F]), while high temperature causes a low resistance (70 ohms at 130°C [266°F]).

The electronic control module (ECM) provides 5 volts to the MAT sensor through a resistor in the ECM and measures the change in voltage to determine the MAT. The voltage will be high when the manifold air is cold and low when the air is hot. The ECM knows the intake MAT by measuring the voltage.

The MAT sensor is also used to control spark timing when the manifold air is cold.

A failure in the MAT sensor circuit sets a diagnostic trouble code 23 or 25.

IDLE AIR CONTROL VALVE

Notice: Do not attempt to remove the protective cap and readjust the stop screw. Misadjustment may result in damage to the idle air control (IAC) valve or to the throttle body.

The IAC valve is mounted on the throttle body where it controls the engine idle speed under the command of the electronic control module (ECM). The ECM sends voltage pulses to the IAC valve motor windings, causing the IAC valve pintle to move in or out a given distance (a step or count) for each pulse. The pintle movement controls the airflow around the throttle valves which, in turn, control the engine idle speed.

The desired idle speeds for all engine operating conditions are programmed into the calibration of the ECM. These programmed engine speeds are based on the coolant temperature, the park/neutral switch status, the vehicle speed, the battery voltage, and the A/C system pressure, if equipped.

The ECM „learns” the proper IAC valve positions to achieve warm, stabilized idle speeds (rpm) desired for the various conditions (park/neutral or drive, A/C on or off, if equipped). This information is stored in ECM „keep alive” memories (information is retained after the ignition is turned off). All other IAC valve positioning is calculated based on these memory values. As a result, engine variations due to wear and variations in the minimum throttle valve position (within limits) do not affect engine idle speeds. This system provides correct idle control under all conditions. This also means that disconnecting power to the ECM can result in incorrect idle control or the necessity to partially press the accelerator when starting until the ECM relearns idle control.

Engine idle speed is a function of total airflow into the engine based on the IAC valve pintle position, the throttle valve opening, and the calibrated vacuum loss through accessories. The minimum throttle valve position is set at the factory with a stop screw. This setting allows enough airflow by the throttle valve to cause the IAC valve pintle to be positioned a calibrated number of steps (counts) from the seat during „controlled” idle operation. The minimum throttle valve position setting on this engine should not be considered the „minimum idle speed,” as on other fuel injected engines. The throttle stop screw is covered with a plug at the factory following adjustment.

If the IAC valve is suspected as being the cause of improper idle speed, refer to „Idle Air Control System Check” in this section.

MANIFOLD ABSOLUTE PRESSURE SENSOR

The manifold absolute pressure (MAP) sensor measures the changes in the intake manifold pressure which result from engine load and speed changes and converts these to a voltage output.

A closed throttle on engine coast down produces a relatively low MAP output. MAP is the opposite of vacuum. When manifold pressure is high, vacuum is low. The MAP sensor is also used to measure barometric pressure. This is performed as part of MAP sensor calculations. With the ignition ON and the engine not running, the electronic control module (ECM) will read the manifold pressure as barometric pressure and adjust the air/fuel ratio accordingly. This compensation for altitude allows the system to maintain driving performance while holding emissions low. The barometric function will update periodically during steady driving or under a wide open throttle condition. In the case of a fault in the barometric portion of the MAP sensor, the ECM will set to the default value.

A failure in the MAP sensor circuit sets a diagnostic trouble code 33 or 34.

The following tables show the difference between absolute pressure and vacuum related to MAP sensor output, which appears as the top row of both tables.

MAP

Volts	4.9	4.4	3.8	3.3	2.7	2.2	1.7	1.1	0.6	0.3	0.3
kPa	100	90	80	70	60	50	40	30	20	10	0
in. Hg	29.6	26.6	23.7	20.7	17.7	14.8	11.8	8.9	5.9	2.9	0

VACUUM

Volts	4.9	4.4	3.8	3.3	2.7	2.2	1.7	1.1	0.6	0.3	0.3
kPa	0	10	20	30	40	50	60	70	80	90	100
in. Hg	0	2.9	5.9	8.9	11.8	14.8	17.7	20.7	23.7	26.7	29.6

ELECTRONIC CONTROL MODULE

The electronic control module (ECM), located inside the passenger kick panel, is the control center of the fuel injection system. It constantly looks at the information from various sensors and controls the systems that affect the vehicle's performance. The ECM also performs the diagnostic functions of the system. It can recognize operational problems, alert the driver through the service engine soon (SES), and store diagnostic trouble code(s) which identify the problem areas to aid the technician in making repairs.

There are no serviceable parts in the ECM. The calibrations are stored in the ECM in the programmable read only memory (PROM).

The ECM supplies either 5 or 12 volts to power the sensors or switches. This is done through resistances in the ECM which are so high in value that a test light will not come on when connected to the circuit. In some cases, even an ordinary shop voltmeter will not give an accurate reading because its resistance is too low. You must use a digital voltmeter with a 10 megohm input impedance to get accurate voltage readings. The ECM controls output circuits such as the fuel injectors, the idle air control (IAC) valve, the A/C clutch relay, etc., by controlling the ground circuit through transistors or a device called a „quad driver."

FUEL INJECTOR

The multiport fuel injection (MPFI) assembly is a solenoid operated device controlled by the electronic control module (ECM) that meters pressurized fuel to a single engine cylinder. The ECM energizes the fuel injector or solenoid to a normally closed ball or pintle valve. This allows fuel to flow into the top of the injector, past the ball or pintle valve, and through a recessed flow director plate at the injector outlet.

The director plate has six machined holes that control the fuel flow, generating a conical spray pattern of finely atomized fuel at the injector tip. Fuel from the tip is directed at the intake valve, causing it to become further atomized and vaporized before entering the combustion chamber. A fuel injector which is stuck partially open would cause a loss of fuel pressure after the engine is shut down. Also, an extended crank time would be noticed on some engines. Dieseling could also occur because some fuel could be delivered to the engine after the ignition is turned off.

FUEL CUTOFF SWITCH

The fuel cutoff switch is a safety device. In the event of a collision or a sudden impact, it automatically cuts off the fuel supply and activates the door lock relay. After the switch has been activated, it must be reset in order to restart the engine. Reset the fuel cutoff switch by pressing the rubber top of the switch. The switch is located near the right side of the passenger's seat.

KNOCK SENSOR (DOHC)

The knock sensor detects abnormal knocking in the engine. The sensor is mounted in the engine block near the cylinders. The sensor produces an AC output voltage which increases with the severity of the knock.

This signal is sent to the electronic control module (ECM). The ECM then adjusts the ignition timing to reduce the spark knock.

STRATEGY BASED DIAGNOSTICS

Strategy Based Diagnostics

The strategybased diagnostic is a uniform approach to repair all Electrical/Electronic (E/E) systems. The diagnostic flow can always be used to resolve an E/E system problem and is a starting point when repairs are necessary. The following steps will instruct the technician on how to proceed with a diagnosis:

- Verify the customer complaint. To verify the customer complaint, the technician should know the normal operation of the system.
- Perform preliminary checks as follows:
  - Conduct a thorough visual inspection.
  - Review the service history.
  - Detect unusual sounds or odors.
  - Gather diagnostic trouble code (DTC) information to achieve an effective repair.
- Check bulletins and other service information. This includes videos, newsletters, etc.
- Refer to service information (manual) system check(s).
- Refer to service diagnostics.

No Trouble Found

This condition exists when the vehicle is found to operate normally. The condition described by the customer may be normal. Verify the customer complaint against another vehicle that is operating normally. The condition may be intermittent. Verify the complaint under the conditions described by the customer before releasing the vehicle.

Reexamine the complaint.

When the complaint cannot be successfully found or isolated, a reevaluation is necessary. The complaint should be reverified and could be intermittent as defined in „Intermittents," or could be normal.

After isolating the cause, the repairs should be made. Validate for proper operation and verify that the symptom has been corrected. This may involve road testing or other methods to verify that the complaint has been resolved under the following conditions:

- Conditions noted by the customer.
- If a DTC was diagnosed, verify a repair by duplicating conditions present when the DTC was set as noted in the Failure Records or Freeze Frame data.

Verifying Vehicle Repair

Verification of the vehicle repair will be more comprehensive for vehicles with OnBoard Diagnostic (OBD) system diagnostics. Following a repair, the technician should perform the following steps:

Important: Follow the steps below when you verify repairs on OBD systems. Failure to follow these steps could result in unnecessary repairs.

- Review and record the Failure Records and the Freeze Frame data for the DTC which has been diagnosed (Freeze Fame data will only be stored for an A or B type diagnostic and only if the Malfunction Indicator Lamp has been requested).
- Clear the DTC(s).
- Operate the vehicle within conditions noted in the Failure Records and Freeze Frame data.
- Monitor the DTC status information for the specific DTC which has been diagnosed until the diagnostic test associated with that DTC runs.

OBD SERVICEABILITY ISSUES

Based on the knowledge gained from OnBoard Diagnostic (OBD) experience in the 1994 and 1995 model years, this list of nonvehicle faults that could affect the performance of the OBD system has been compiled. These nonvehicle faults vary from environmental conditions to the quality of fuel used. With the introduction of OBD across the entire passenger car and lightduty truck market in 1996, illumination of the Malfunction Indicator Lamp (MIL) due to a nonvehicle fault could lead to misdiagnosis of the vehicle, increased warranty expense and customer dissatisfaction. The following list of nonvehicle faults does not include every possible fault and may not apply equally to all product lines.

Fuel Quality

Fuel quality is not a new issue for the automotive industry, but its potential for turning on the MIL with OBD systems is new.

Fuel additives such as ``dry gas" and ``octane enhancers" may affect the performance of the fuel. If this results in an incomplete combustion or a partial burn, it will set Diagnostic Trouble Code (DTC) P0300. The Reed Vapor Pressure of the fuel can also create problems in the fuel system, especially during the spring and fall months when severe ambient temperature swings occur. A high Reed Vapor Pressure could show up as a Fuel Trim DTC due to excessive canister loading. High vapor pressures generated in the fuel tank can also affect the Evaporative Emission diagnostic.

Using fuel with the wrong octane rating for your vehicle may cause driveability problems. Many of the major fuel companies advertise that using "premium" gasoline will improve the performance of your vehicle. Most premium fuels use alcohol to increase the octane rating of the fuel. Although alcoholenhanced fuels may raise the octane rating, the fuel's ability to turn into vapor in cold temperatures deteriorates. This may affect the starting ability and cold driveability of the engine.

Low fuel levels can lead to fuel starvation, lean engine operation, and eventually engine misfire.

NonOEM Parts

The OBD system has been calibrated to run with Original Equipment Manufacturer (OEM) parts. Something as simple as a high performanceexhaust system that affects exhaust system back pressure could potentially interfere with the operation of the exhaust

gas recirculation (EGR) valve and thereby turn on the MIL. Small leaks in the exhaust system near the post catalyst oxygen sensor can also cause the MIL to turn on.

Aftermarket electronics, such as cellular phones, stereos, and antitheft devices, may radiate electromagnetic interference (EMI) into the control system if they are improperly installed. This may cause a false sensor reading and turn on the MIL.

Environment

Temporary environmental conditions, such as localized flooding, will have an effect on the vehicle ignition system. If the ignition system is rainsoaked, it can temporarily cause engine misfire and turn on the MIL.

Refueling

A new OBD checks the integrity of the entire evaporative emission system. If the vehicle is restarted after refueling and the fuel cap is not secured correctly, the OBD system will sense this as a system fault and turn on the MIL and set DTC P0440.

Vehicle Marshaling

The transportation of new vehicles from the assembly plant to the dealership can involve as many as 60 key cycles within 2 to 3 miles of driving. This type of operation contributes to the fuel fouling of the spark plugs and will turn on the MIL with a set DTC P0300.

Poor Vehicle Maintenance

The sensitivity of the OBD will cause the MIL to turn on if the vehicle is not maintained properly. Restricted air filters, fuel filters, and crankcase deposits due to lack of oil changes or improper oil viscosity can trigger actual vehicle faults that were not previously monitored prior to OBD. Poor vehicle maintenance can not be classified as a ``nonvehicle fault," but with the sensitivity of the OBD, vehicle maintenance schedules must be more closely followed.

Severe Vibration

The Misfire diagnostic measures small changes in the rotational speed of the crankshaft. Severe driveline vibrations in the vehicle, such as caused by an excessive amount of mud on the wheels, can have the same effect on crankshaft speed as misfire and, therefore, may set DTC P0300.

Related System Faults

Many of the OBD system diagnostics will not run if the engine control module (ECM) detects a fault on a related system or component. One example would be that if the ECM detected a Misfire fault, the diagnostics on the catalytic converter would be suspended until the Misfire fault was repaired. If the Misfire fault is severe enough, the catalytic converter can be damaged due to overheating and will never set a Catalyst DTC until the Misfire fault is repaired and the Catalyst diagnostic is allowed to run to completion. If this happens, the customer may have to make two trips to the dealership in order to repair the vehicle.

SERIAL DATA COMMUNICATIONS

Class II Serial Data Communications

Government regulations require that all vehicle manufacturers establish a common communication system. This vehicle utilizes the ``Class II" communication system. Each bit of information can have one of two lengths: long or short. This allows vehicle wiring to be reduced by transmitting and receiving multiple signals over a single wire. The messages carried on Class II data streams are also prioritized. If two messages attempt to establish communications on the data line at the same time, only the message with higher priority will continue. The device with the lower priority message must wait. The most significant result of this regulation is that it provides scan tool manufacturers with the capability to access data from any make or model vehicle that is sold.

The data displayed on the other scan tool will appear the same, with some exceptions. Some scan tools will only be able to display certain vehicle parameters as values that are a coded representation of the true or actual value. On this vehicle, the scan tool displays the actual values for vehicle parameters. It will not be necessary to perform any conversions from coded values to actual values.

ON-BOARD DIAGNOSTIC (OBD)

On-Board Diagnostic Tests

A diagnostic test is a series of steps, the result of which is a pass or fail reported to the diagnostic executive. When a diagnostic test reports a pass result, the diagnostic executive records the following data:

- The diagnostic test has been completed since the last ignition cycle.
- The diagnostic test has passed during the current ignition cycle.
- The fault identified by the diagnostic test is not currently active.

When a diagnostic test reports a fail result, the diagnostic executive records the following data:

- The diagnostic test has been completed since the last ignition cycle.
- The fault identified by the diagnostic test is currently active.
- The fault has been active during this ignition cycle.
- The operating conditions at the time of the failure.

Remember, a fuel trim Diagnostic Trouble Code (DTC) may be triggered by a list of vehicle faults. Make use of all information available (other DTCs stored, rich or lean condition, etc.) when diagnosing a fuel trim fault.

COMPREHENSIVE COMPONENT MONITOR DIAGNOSTIC OPERATION

Comprehensive component monitoring diagnostics are required to monitor emissionrelated input and output powertrain components.

Input Components

Input components are monitored for circuit continuity and outofrange values. This includes rationality checking. Rationality checking refers to indicating a fault when the signal from a sensor does not seem reasonable, i.e. Throttle Position sensor (TPS) that indicates high throttle position at low engine loads or Manifold Absolute Pressure (MAP) voltage. Input components may include, but are not limited to, the following sensors:

- Vehicle Speed Sensor (VSS).
- Crankshaft Position sensor (CPS).
- Throttle Position Sensor (TPS).
- Engine Coolant Temperature Sensor (CTS).
- Camshaft Position (CMP) sensor.
- MAP sensor.

In addition to the circuit continuity and rationality check, the CTS sensor is monitored for its ability to achieve a steady state temperature to enable closed loop fuel control.

Output Components

Output components are diagnosed for proper response to control module commands. Components where functional monitoring is not feasible will be monitored for circuit continuity and outofrange values if applicable. Output components to be monitored include, but are not limited to the following circuit:

- Idle Air Control (IAC) Motor.
- Control module controlled Evaporative Emission (EVAP) Canister Purge Valve.
- A/C relays.
- Cooling fan relay.
- VSS output.
- Malfunction Indicator Lamp (MIL) control.
- Cruise control inhibit.

Refer to „Engine Control Module” and the sections on Sensors in General Descriptions.

Passive and Active Diagnostic Tests

A passive test is a diagnostic test which simply monitors a vehicle system or component. Conversely, an active test, actually takes some sort of action when performing diagnostic functions, often in response to a failed passive test. For example, the Exhaust Gas Recirculation (EGR) diagnostic active test will force the EGR valve open during closed throttle deceleration and/or force the EGR valve closed during a steady state. Either action should result in a change in manifold pressure.

Intrusive Diagnostic Tests

This is any onboard test run by the Diagnostic Management System which may have an effect on vehicle performance or emission levels.

Warm-Up Cycle

A warmup cycle means that engine at temperature must reach a minimum of 70°C (160°F) and rise at least 22°C (40°F) over the course of a trip.

Freeze Frame

Freeze Frame is an element of the Diagnostic Management System which stores various vehicle information at the moment an emissionrelated fault is stored in memory and when the MIL is commanded on. These data can help to identify the cause of a fault.

Failure Records

Failure Records data is an enhancement of the OBD Freeze Frame feature. Failure Records store the same vehicle information as does Freeze Frame, but it will store that information for any fault which is stored in onboard memory, while Freeze Frame stores information only for emissionrelated faults that command the MIL on.

COMMON OBD TERMS

Diagnostic

When used as a noun, the word diagnostic refers to any onboard test run by the vehicle's Diagnostic Management System. A diagnostic is simply a test run on a system or component to determine if the system or component is operating according to specification. There are many diagnostics, shown in the following list:

- Misfire.
- Oxygen sensors (O2S 1).
- Heated oxygen sensor (HO2S 2).
- Exhaust Gas Recirculation (EGR).
- Catalyst monitoring.

Enable Criteria

The term ”enable criteria” is engineering language for the conditions necessary for a given diagnostic test to run. Each diagnostic has a specific list of conditions which must be met before the diagnostic will run.

``Enable criteria” is another way of saying ``conditions required.”

The enable criteria for each diagnostic is listed on the first page of the Diagnostic Trouble Code (DTC) description under the heading ``Conditions for Setting the DTC.” Enable criteria varies with each diagnostic and typically includes, but is not limited to the following items:

- Engine speed.
- Vehicle speed.
- Engine Coolant Temperature.

- Manifold Absolute Pressure (MAP).
- Barometric Pressure (BARO).
- Intake Manifold Air Temperature (MAP).
- Throttle Position.
- High canister purge.
- Fuel trim.
- A/C on.

Trip

Technically, a trip is a keyon run keyoff cycle in which all the enable criteria for a given diagnostic are met, allowing the diagnostic to run. Unfortunately, this concept is not quite that simple. A trip is official when all the enable criteria for a given diagnostic are met. But because the enable criteria vary from one diagnostic to another, the definition of trip varies as well. Some diagnostics are run when the vehicle is at operating temperature, some when the vehicle first starts up; some require that the vehicle cruise at a steady highway speed, some run only when the vehicle is at idle. Some run only immediately following a cold engine startup.

A trip then, is defined as a key-on-run-key-off cycle in which the vehicle is operated in such a way as to satisfy the enable criteria for a given diagnostic, and this diagnostic will consider this cycle to be one trip. However, another diagnostic with a different set of enable criteria (which were not met) during this driving event, would not consider it a trip. No trip will occur for that particular diagnostic until the vehicle is driven in such a way as to meet all the enable criteria.

Diagnostic Information

The diagnostic charts and functional checks are designed to locate a faulty circuit or component through a process of logical decisions. The charts are prepared with the requirement that the vehicle functioned correctly at the time of assembly and that there are not multiple faults present.

There is a continuous selfdiagnosis on certain control functions. This diagnostic capability is complimented by the diagnostic procedures contained in this manual. The language of communicating the source of the malfunction is a system of diagnostic trouble codes. When a malfunction is detected by the control module, a DTC is set, and the Malfunction Indicator Lamp (MIL) is illuminated.

Malfunction Indicator Lamp (MIL)

The Malfunction Indicator Lamp (MIL) is required by OnBoard Diagnostics (OBD) to illuminate under a strict set of guidelines.

Basically, the MIL is turned on when the engine control module (ECM) detects a DTC that will impact the vehicle emissions.

The MIL is under the control of the Diagnostic Executive. The MIL will be turned on if an emissionsrelated diagnostic test indicates a malfunction has occurred. It will stay on until the system or component passes the same test for three consecutive trips with no emissions related faults.

Extinguishing the MIL

When the MIL is on, the Diagnostic Executive will turn off the MIL after three consecutive trips that a ``test passed" has been reported for the diagnostic test that originally caused the MIL to illuminate. Although the MIL has been turned off, the DTC will remain in the ECM memory (both Freeze Frame and Failure Records) until forty (40) warmup cycles after no faults have been completed.

If the MIL was set by either a fuel trim or misfirerelated DTC, additional requirements must be met. In addition to the requirements stated in the previous paragraph, these requirements are as follows:

- The diagnostic tests that are passed must occur with 375 rpm of the rpm data stored at the time the last test failed.
- Plus or minus ten percent of the engine load that was stored at the time the last test failed. Similar engine temperature conditions (warmed up or warming up) as those stored at the time the last test failed.

Meeting these requirements ensures that the fault which turned on the MIL has been corrected.

The MIL is on the instrument panel and has the following functions:

- It informs the driver that a fault affecting the vehicle's emission levels has occurred and that the vehicle should be taken for service as soon as possible.
- As a system check, the MIL will come on with the key ON and the engine not running. When the engine is started, the MIL will turn OFF.
- When the MIL remains ON while the engine is running, or when a malfunction is suspected due to a driveability or emissions problem, an OBD System Check must be performed. The procedures for these checks are given in OBD System Check. These checks will expose faults which may not be detected if other diagnostics are performed first.

Data Link Connector (DLC)

The provision for communicating with the control module is the Data Link Connector (DLC). The DLC is used to connect to a scan tool. Some common uses of the scan tool are listed below:

- Identifying stored DTCs.
- Clearing DTCs.
- Performing output control tests.
- Reading serial data.

DTC TYPES

Each Diagnostic Trouble Code (DTC) is directly related to a diagnostic test. The Diagnostic Management System sets DTCs based on the failure of the tests during a trip or trips. Certain tests must fail two consecutive trips before the DTC is set. The following are the three types of DTCs and the characteristics of those codes:

Type A

- Emissions related.
- Requests illumination of the Malfunction Indicator. Lamp (MIL) of the first trip with a fail.
- Stores a History DTC on the first trip with a fail.
- Stores a Freeze Frame (if empty).
- Stores a Fail Record.
- Updates the Fail Record each time the diagnostic test fails.

Type B

- Emissions related.
- ``Armed" after one trip with a fail.
- ``Disarmed" after one trip with a pass.
- Requests illumination of the MIL on the second consecutive trip with a fail.
- Stores a History DTC on the second consecutive trip. with a fail (The DTC will be armed after the first fail).
- Stores a Freeze Frame on the second consecutive trip with a fail (if empty).

Type D (Type D nonemissions related are not utilized on certain vehicle applications).

- NonEmissions related.
- Does not request illumination of any lamp.
- Stores a History DTC on the first trip with a fail .
- Does not store a Freeze Frame.
- Stores Fail Record when test fails.
- Updates the Fail Record each time the diagnostic test fails.

Important: Only four Fail Records can be stored. Each Fail Record is for a different DTC. It is possible that there will not be Fail Records for every DTC if multiple DTCs are set.

Special Cases of Type B Diagnostic Tests

Unique to the misfire diagnostic, the Diagnostic Executive has the capability of alerting the vehicle operator to potentially damaging levels of misfire. If a misfire condition exists that could potentially damage the catalytic converter as a result of high misfire levels, the Diagnostic Executive will command the MIL to ``flash" as a rate of once per seconds during those the time that the catalyst damaging misfire condition is present.

Fuel trim and misfire are special cases of Type B diagnostics. Each time a fuel trim or misfire malfunction is detected, engine load, engine speed, and engine coolant temperature are recorded.

When the ignition is turned OFF, the last reported set of conditions remain stored. During subsequent ignition cycles, the stored conditions are used as a reference for similar conditions. If a malfunction occurs during two consecutive trips, the Diagnostic Executive treats the failure as a normal Type B diagnostic, and does not use the stored conditions. However, if a malfunction occurs on two nonconsecutive trips, the stored conditions are compared with the current conditions. The MIL will then illuminate under the following conditions:

- When the engine load conditions are within 10% of the previous test that failed.
- Engine speed is within 375 rpm, of the previous test that failed.
- CTS is in the same range as the previous test that failed.

READING DIAGNOSTIC TROUBLE CODES

The procedure for reading diagnostic trouble code(s) (DTC) is to use a diagnostic scan tool. When reading DTC(s), follow instructions supplied by tool manufacturer.

Clearing Diagnostic Trouble Codes

Important: Do not clear DTCs unless directed to do so by the service information provided for each diagnostic procedure. When DTCs are cleared, the Freeze Frame and Failure Record data which may help diagnose an intermittent fault will also be erased from memory. If the fault that caused the DTC to be stored into memory has been corrected, the Diagnostic Executive will begin to count the ``warmup" cycles with no further faults detected, the DTC will automatically be cleared from the engine control module (ECM) memory.

To clear DTCs, use the diagnostic scan tool. When a scan tool is not available, DTCs can also be cleared by disconnecting one of the following sources for at least thirty (30) seconds:

Notice: To prevent system damage, the ignition key must be OFF when disconnecting or reconnecting battery power.

- The power source to the control module. Examples: fuse, pigtail at battery ECM connectors, etc.
- The negative battery cable. (Disconnecting the negative battery cable will result in the loss of other onboard memory data, such as preset radio tuning.)

DTC Modes

On OnBoard Diagnostic (OBD) passenger cars there are five options available in the scan tool DTC mode to display the enhanced information available. A description of the new modes, DTC Info and Specific DTC, follows. After selecting DTC, the following menu appears:

- DTC Info.
- Specific DTC.
- Freeze Frame.
- Fail Records (not all applications).
- Clear Info.

The following is a brief description of each of the sub menus in DTC Info and Specific DTC. The order in which they appear here is alphabetical and not necessarily the way they will appear on the scan tool.

DTC Information Mode

Use the DTC info mode to search for a specific type of stored DTC information. There are seven choices. The service manual may instruct the technician to test for

DTCs in a certain manner. Always follow published service procedures.

To get a complete description of any status, press the ``Enter" key before pressing the desired F□key. For example, pressing ``Enter" then an F□key will display a definition of the abbreviated scan tool status.

DTC Status

This selection will display any DTCs that have not run during the current ignition cycle or have reported a test failure during this ignition up to a maximum of 33 DTCs. DTC tests which run and pass will cause that DTC number to be removed from the scan tool screen.

Fail This Ign. (Fail This Ignition)

This selection will display all DTCs that have failed during the present ignition cycle.

History

This selection will display only DTCs that are stored in the ECM's history memory. It will not display Type B DTCs that have not requested the Malfunction Indicator Lamp (MIL). It will display all type A and B DTCs that have requested the MIL and have failed within the last 40 warm□up cycles. In addition, it will display all type C and type D DTCs that have failed within the last 40 warm□up cycles.

Last Test Fail

This selection will display only DTCs that have failed the last time the test ran. The last test may have run during a previous ignition cycle if a type A or type B DTC is displayed. For type C and type D DTCs, the last failure must have occurred during the current ignition cycle to appear as Last Test Fail.

MIL Request

This selection will display only DTCs that are requesting the MIL. Type C and type D DTCs cannot be displayed using this option. This selection will report type B DTCs only after the MIL has been requested.

Not Run SCC (Not Run Since Code Clear)

This option will display up to 33 DTCs that have not run since the DTCs were last cleared. Since the displayed DTCs have not run, their condition (passing or failing) is unknown.

Test Fail SCC (Test Failed Since Code Clear)

This selection will display all active and history DTCs that have reported a test failure since the last time DTCs were cleared. DTCs that last failed more than 40 warm□up cycles before this option is selected will not be displayed.

Specific DTC Mode

This mode is used to check the status of individual diagnostic tests by DTC number. This selection can be accessed if a DTC has passed, failed or both. Many OBD DTC mode descriptions are possible because of the extensive amount of information that the diagnostic executive monitors regarding each test. Some of the many possible descriptions follow with a brief explanation.

The ``F2" key is used, in this mode, to display a description of the DTC. The ``Yes" and ``No" keys may also be used to display more DTC status information. This selection will only allow entry of DTC numbers that are supported by the vehicle being tested. If an attempt is, made to enter DTC numbers for tests which the diagnostic executive does not recognize, the requested information will not be displayed correctly and the scan tool may display an error message. The same applies to using the DTC trigger option in the Snapshot mode. If an invalid DTC is entered, the scan tool will not trigger.

Failed Last Test

This message display indicates that the last diagnostic test failed for the selected DTC. For type A and type B DTCs, this message will be displayed during subsequent ignition cycles until the test passes or DTCs are cleared. For type C and type D DTCs, this message will clear when the ignition is cycled.

Failed Since Clear

This message display indicates that the DTC has failed at least once within the last 40 warm□up cycles since the last time DTCs were cleared.

Failed This Ig. (Failed This Ignition)

This message display indicates that the diagnostic test has failed at least once during the current ignition cycle. This message will clear when DTCs are cleared or the ignition is cycled.

History DTC

This message display indicates that the DTC has been stored in memory as a valid fault. A DTC displayed as a History fault may not mean that the fault is no longer present. The history description means that all the conditions necessary for reporting a fault have been met (maybe even currently), and the information was stored in the control module memory.

MIL Requested

This message display indicates that the DTC is currently causing the MIL to be turned ON. Remember that only type A and type B DTCs can request the MIL. The MIL request cannot be used to determine if the DTC fault conditions are currently being experienced. This is because the diagnostic executive will require up to three trips during which the diagnostic test passes to turn OFF the MIL.

Not Run Since Cl (Not Run Since Cleared)

This message display indicates that the selected diagnostic test has not run since the last time DTCs were cleared. Therefore, the diagnostic test status (passing or failing) is unknown. After DTCs are cleared, this message will continue to be displayed until the diagnostic test runs.

Not Run This Ig. (Not Run This Ignition)

This message display indicates that the selected diagnostic test has not run during this ignition cycle.

Test Ran and Passed

This message display indicates that the selected diagnostic test has done the following:

- Passed the last test.
- Run and passed during this ignition cycle.
- Run and passed since DTCs were last cleared.

If the indicated status of the vehicle is ``Test Ran and Passed" after a repair verification, the vehicle is ready to be released to the customer.

If the indicated status of the vehicle is ``Failed This Ignition" after a repair verification, then the repair is incomplete and further diagnosis is required.

Prior to repairing a vehicle, status information can be used to evaluate the state of the diagnostic test, and to help identify an intermittent problem. The technician can conclude that although the MIL is illuminated, the fault condition that caused the code to set is not present. An intermittent condition must be the cause.

PRIMARY SYSTEM BASED DIAGNOSTICS

There are primary system-based diagnostics which evaluate the system operation and its effect on vehicle emissions. The primary system-based diagnostics are listed below with a brief description of the diagnostic function:

Oxygen Sensor Diagnosis

The fuel control oxygen sensor (O2S 1) is diagnosed for the following conditions:

- Slow response.
- Response time (time to switch R/L or L/R).
- Inactive signal (output steady at bias voltage approximately 450 mv).
- Signal fixed high.
- Signal fixed low.

The catalyst monitor heated oxygen sensor (HO2S 2) is diagnosed for the following conditions:

- Heater performance (time to activity on cold start).
- Signal fixed low during steady state conditions or power enrichment (hard acceleration when a rich mixture should be indicated).
- Signal fixed high during steady state conditions or deceleration mode (deceleration when a lean mixture should be indicated).
- Inactive sensor (output steady at approx. 438 mv).

If the O2S 1 pigtail wiring, connector or terminal are damaged, the entire O2S 1 assembly must be replaced. Do not attempt to repair the wiring, connector or terminals. In order for the sensor to function properly, it must have clean reference air provided to it. This clean air reference is obtained by way of the O2S 1 wire(s). Any attempt to repair the wires, connector or terminals could result in the obstruction of the reference air and degrade the O2S 1 performance.

Misfire Monitor Diagnostic Operation

The misfire monitor diagnostic is based on crankshaft rotational velocity (reference period) variations. The engine control module (ECM) determines crankshaft rotational velocity using the crankshaft position sensor (CPS) and the camshaft position (CMP) sensor. When a cylinder misfires, the crankshaft slows down momentarily. By monitoring the CPS and CMP sensor signals, the ECM can calculate when a misfire occurs.

For a non-catalyst damaging misfire, the diagnostic will be required to monitor a misfire present for between 1000-3200 engine revolutions.

For catalyst damaging misfire, the diagnostic will respond to misfire within 200 engine revolutions.

Rough roads may cause false misfire detection. A rough road will cause torque to be applied to the drive wheels and drive train. This torque can intermittently decrease the crankshaft rotational velocity. This may be falsely detected as a misfire.

A rough road sensor, or ``G sensor," works together with the misfire detection system. The G sensor produces a voltage that varies along with the intensity of road vibrations. When the ECM detects a rough road, the misfire detection system is temporarily disabled.

Misfire Counters

Whenever a cylinder misfires, the misfire diagnostic counts the misfire and notes the crankshaft position at the time the misfire occurred. These ``misfire counters" are basically a file on each engine cylinder. A current and a history misfire counter are maintained for each cylinder. The misfire current counters (Misfire Cur #1-4) indicate the number of firing events out of the last 200 cylinder firing events which were misfires. The misfire current counter will display real time data without a misfire DTC stored. The misfire history counters (Misfire Hist #1-4) indicate the total number of cylinder firing events which were misfires. The misfire history counters will display 0 until the misfire diagnostic has failed and a DTC P0300 is set. Once the misfire DTC P0300 is set, the misfire history counters will be updated every 200 cylinder firing events. A misfire counter is maintained for each cylinder.

If the misfire diagnostic reports a failure, the diagnostic executive reviews all of the misfire counters before reporting a DTC. This way, the diagnostic executive reports the most current information.

When crankshaft rotation is erratic, a misfire condition will be detected. Because of this erratic condition, the data that is collected by the diagnostic can sometimes incorrectly identify which cylinder is misfiring.

Use diagnostic equipment to monitor misfire counter data on OBD compliant vehicles. Knowing which specific cylinder(s) misfired can lead to the root cause, even when dealing with a multiple cylinder misfire. Using the information in the misfire counters, identify which cylinders are misfiring. If the counters indicate cylinders numbers 1 and 4 misfired, look for a circuit or component common to both cylinders number 1 and 4.

The misfire diagnostic may indicate a fault due to a temporary fault not necessarily caused by a vehicle emission system malfunction. Examples include the following items:

- Contaminated fuel.
- Low fuel.

- Fuelfouled spark plugs.
- Basic engine fault.

Fuel Trim System Monitor Diagnostic Operation

This system monitors the averages of shortterm and longterm fuel trim values. If these fuel trim values stay at their limits for a calibrated period of time, a malfunction is indicated. The fuel trim diagnostic compares the averages of shortterm fuel trim values and longterm fuel trim values to rich and lean thresholds. If either value is within the thresholds, a pass is recorded. If both values are outside their thresholds, a rich or lean DTC will be recorded.

The fuel trim system diagnostic also conducts an intrusive test. This test determines if a rich condition is being caused by excessive fuel vapor from the Evaporative Emission (EVAP) canister. In order to meet OBD requirements, the control module uses weighted fuel trim cells to determine the need to set a fuel trim DTC. A fuel trim DTC can only be set if fuel trim counts in the weighted fuel trim cells exceed specifications. This means that the vehicle could have a fuel trim problem which is causing a problem under certain conditions (i.e., engine idle high due to a small vacuum leak or rough idle due to a large vacuum leak) while it operates fine at other times. No fuel trim DTC would set (although an engine idle speed DTC or HO2S 2 DTC may set). Use a scan tool to observe fuel trim counts while the problem is occurring.

A fuel trim DTC may be triggered by a number of vehicle faults. Make use of all information available (other DTCs stored, rich or lean condition, etc.) when diagnosing a fuel trim fault.

Fuel Trim Cell Diagnostic Weights

No fuel trim DTC will set regardless of the fuel trim counts in cell 0 unless the fuel trim counts in the weighted cells are also outside specifications. This means that the vehicle could have a fuel trim problem which is causing a problem under certain conditions (i.e. engine idle high due to a small vacuum leak or rough due to a large vacuum leak) while it operates fine at other times. No fuel trim DTC would set (although an engine idle speed DTC or HO2S 2 DTC may set). Use a scan tool to observe fuel trim counts while the problem is occurring.

OCTANE NUMBER CONNECTOR

The octane number connector (white) is located under the passenger seat next to the electronic control module (ECM). The connector is a jumper harness that signals the octane rating of the fuel to the ECM. Four settings are available. The vehicle is shipped from the factory with a label attached to the jumper harness showing the original octane rating on the ECM. The ECM alters fuel delivery and spark timing based on the octane number settings. The following table shows which terminals to jump on the octane number connector to determine the correct fuel octane rating. Terminal 2 is ground on the octane number connector.

Octane Number Selecting (IEFI-6)

	95	91	87	83
ECM Terminal D12	Open	Open	Ground	Ground
ECM Terminal D13	Ground	Open	Open	Ground

Octane Number Selecting (ITMS-6F)

	95	91	87	83
Octane Switch 1 (ECM Terminal D6 and D15)	OFF	OFF	ON	ON
Octane Switch 2 (ECM Terminal C13 and D15)	ON	OFF	OFF	ON

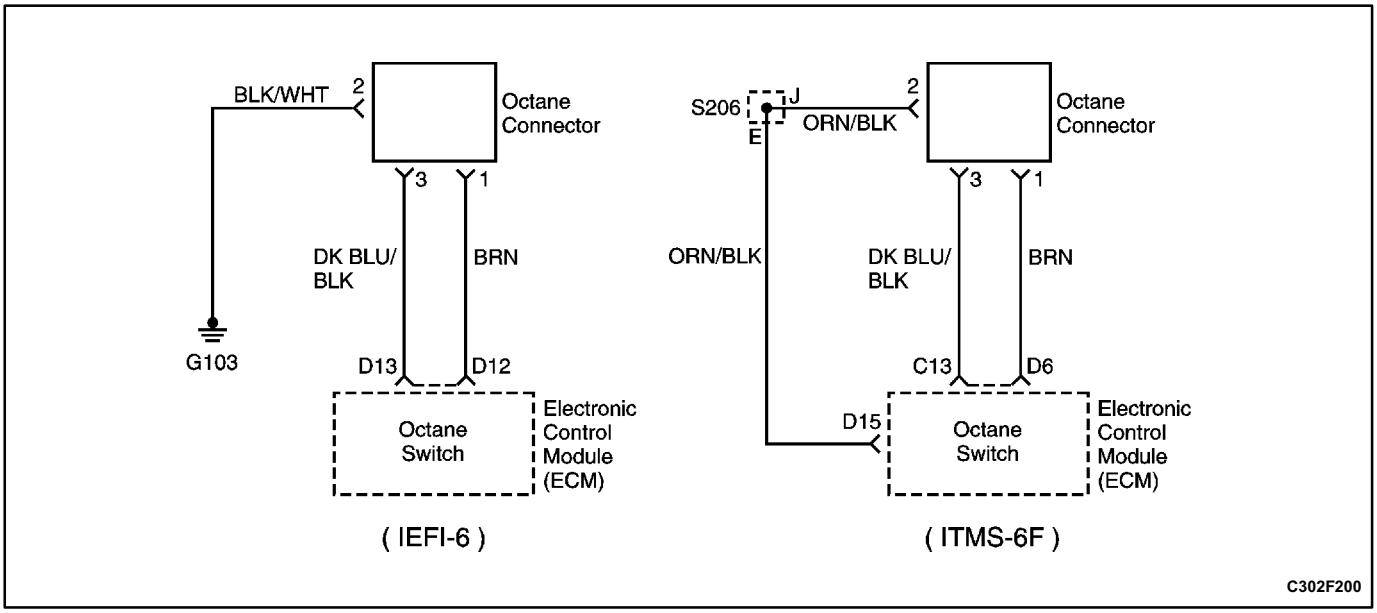

SECTION 1G

ENGINE EXHAUST

Specifications 1G-1
Fastener Tightening Specifications 1G-1
Component Locator 1G-2
Exhaust System 1G-2
Maintenance and Repair 1G-3
On-Vehicle Service 1G-3
Catalytic Converter/Dummy Catalytic Converter 1G-3
Muffler - Front 1G-5
Muffler - Rear 1G-7
Exhaust Pipe 1G-9
General Description and System Operation 1G-12
Exhaust System 1G-12
Muffler 1G-12
Catalytic Converter 1G-12
Dummy Catalytic Converter 1G-12

SPECIFICATIONS

FASTENER TIGHTENING SPECIFICATIONS

Application	N•m	Lb•Ft	Lb•In
Front Exhaust Pipe to Catalytic Converter/Dummy Catalytic Converter Nuts	30	22	-
Front Exhaust Pipe to Exhaust Manifold Nuts	40	30	-
Front Muffler Pipe to Catalytic Converter/Dummy Catalytic Converter Nuts	30	22	-
Front Muffler Pipe to Rear Muffler Pipe Nuts	30	22	-
Lower Front Exhaust Pipe Mounting Bracket Nuts	30	22	-
Rear Muffler Pipe to Exhaust Trim Ring Bolt	15	11	-

COMPONENT LOCATORZD

EXHAUST SYSTEM

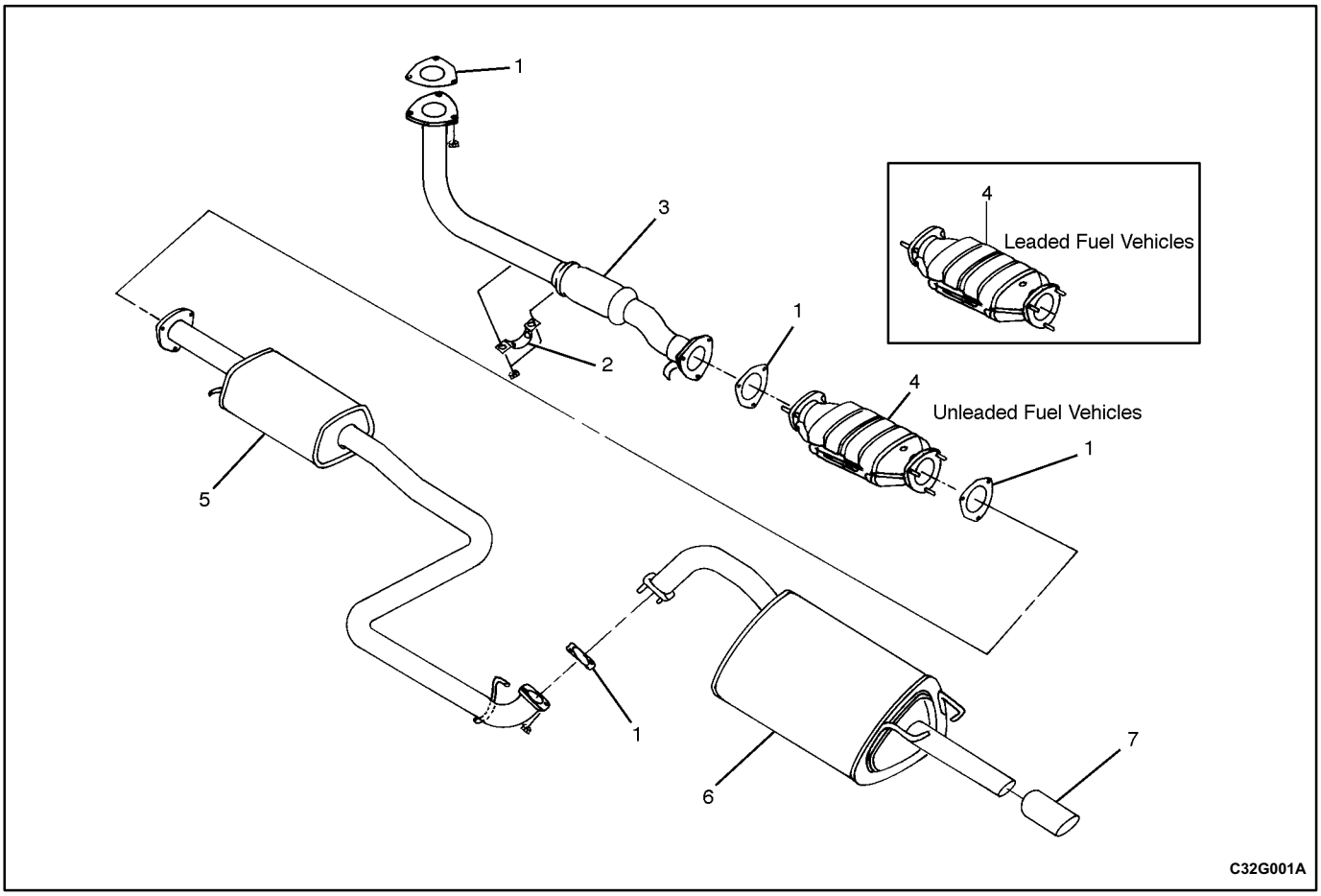

1 Metal Gasket
2 Metal Clamp
3 Front Exhaust Pipe
4 Catalytic Converter or Dummy Catalytic Converter
5 Front Muffler
6 Rear Muffler
7 Trim Ring

MAINTENANCE AND REPAIR

ON-VEHICLE SERVICE

CATALYTIC CONVERTER/ DUMMY CATALYTIC CONVERTER

Removal Procedure

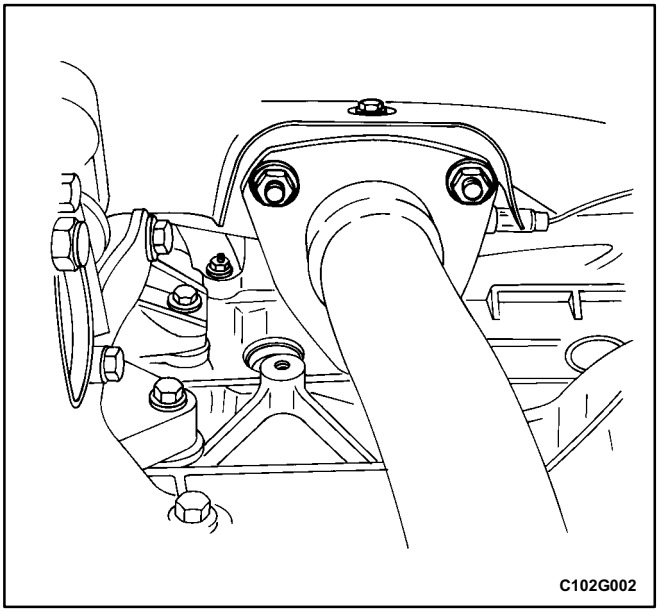

1. Remove the splash guard. Refer to *Section 9N, Frame and Underbody*.
2. Remove the front exhaust pipe nuts and the gasket from the exhaust manifold.

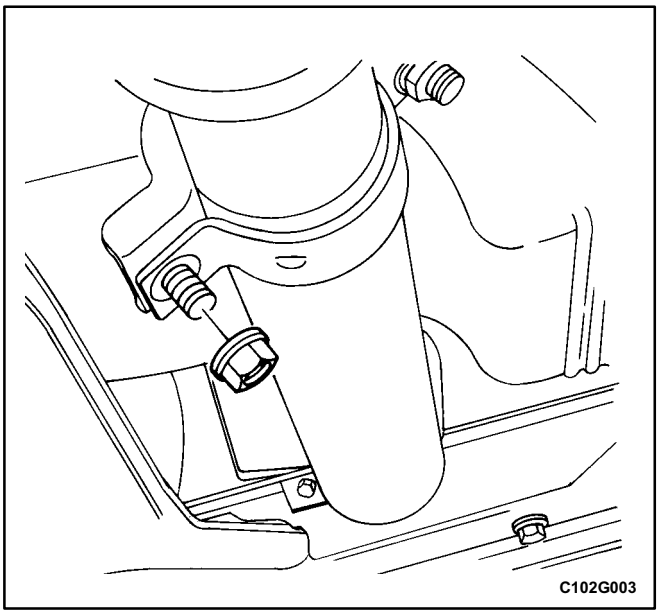

3. Remove the locking nuts from the lower front exhaust pipe mounting bracket which attaches to the welded bolts of the upper front exhaust pipe mounting bracket.
4. Remove the lower front exhaust pipe bracket.
5. Remove the front exhaust pipe from the upper front exhaust pipe mounting bracket.

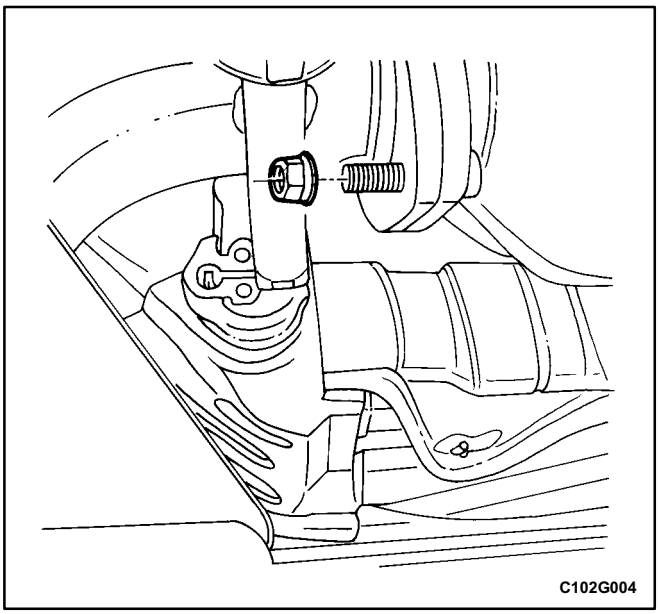

6. Remove the front exhaust pipe from the rubber ring hangers near where the front exhaust pipe flange connects to the catalytic converter (or the dummy catalytic converter) flange.
7. Remove the nuts that secure the front exhaust pipe flange to the catalytic converter (or the dummy catalytic converter) flange.

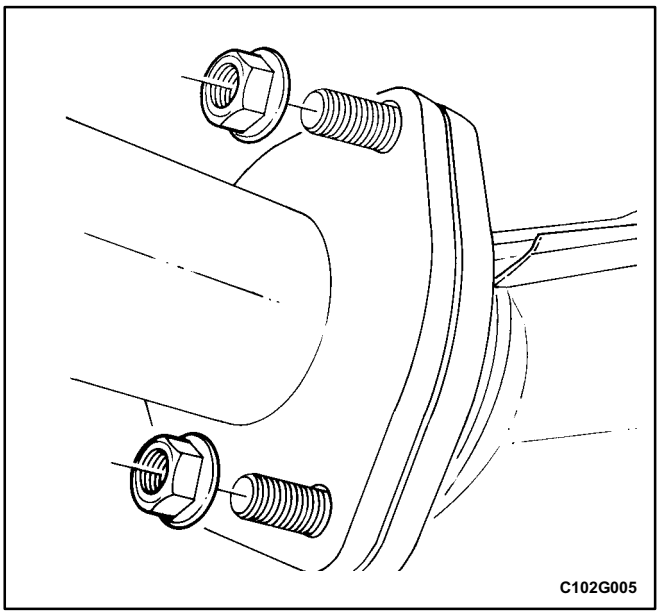

8. Remove the front exhaust pipe and the gasket.
9. Remove the nuts that secure the front muffler pipe to the catalytic converter (or the dummy catalytic converter) flange.
10. Remove the catalytic converter (or the dummy catalytic converter) and the gasket.
11. Clean the sealing surfaces on the front exhaust pipe flange and the exhaust manifold.
12. Check the front exhaust pipe and the catalytic converter (or the dummy catalytic converter) for holes, damage, open seams, or other deterioration which could permit exhaust fumes to seep into the passenger compartment or the trunk.

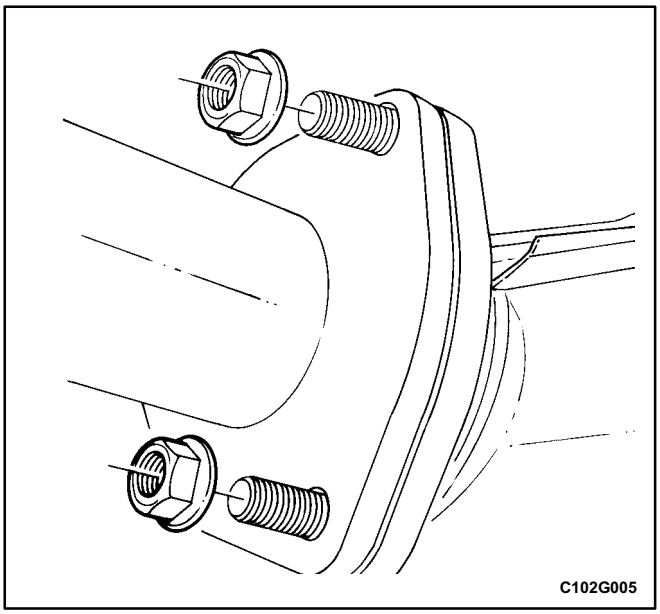

Installation Procedure

1. Install the gasket between the catalytic converter (or the dummy catalytic converter) flange and the front muffler pipe flange.
2. Install the catalytic converter (or the dummy catalytic converter) to the front muffler pipe.
3. Install the nuts to secure the front muffler pipe to the catalytic converter (or the dummy catalytic converter).

Tighten

Tighten the front muffler pipe to catalytic converter (or the dummy catalytic converter) nuts to 30 N•m (22 lb•ft).

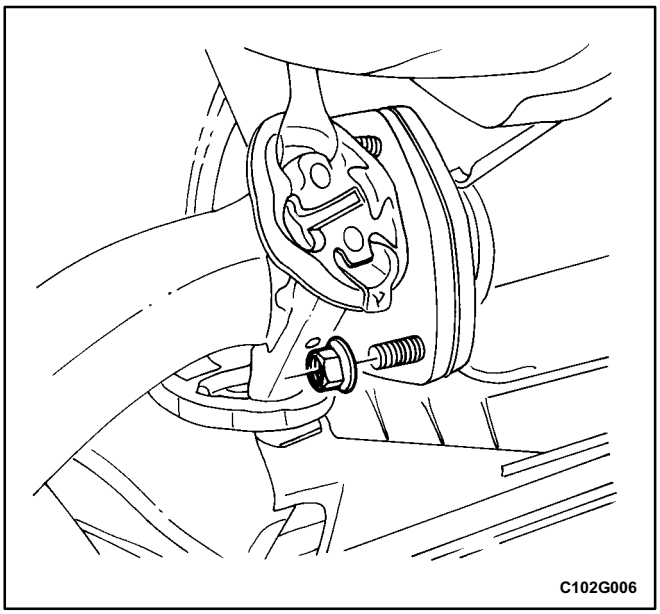

4. Install the front exhaust pipe to the rubber ring hangers.
5. Install the gasket between the front exhaust pipe flange and the catalytic converter (or the dummy catalytic converter) flange.
6. Install the front exhaust pipe to the catalytic converter (or the dummy catalytic converter) using the nuts.

Tighten

Tighten the front exhaust pipe to catalytic converter (or the dummy catalytic converter) nuts to 30 N•m (22 lb•ft).

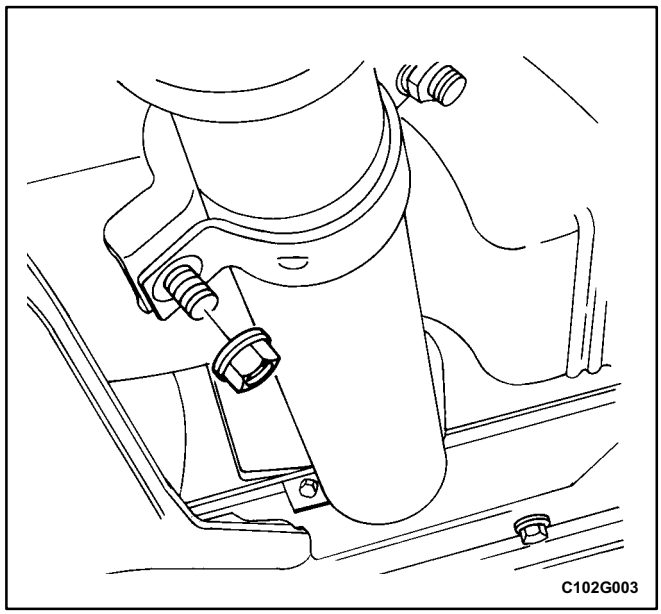

7. Install the front exhaust pipe into the upper front exhaust pipe mounting bracket.
8. Install the lower front exhaust pipe mounting bracket onto the front exhaust pipe.
9. Install the lower front exhaust pipe mounting bracket to the welded bolts of the upper front exhaust pipe mounting bracket using the nuts.

Tighten

Tighten the lower front exhaust pipe mounting bracket nuts to 30 N•m (22 lb•ft).

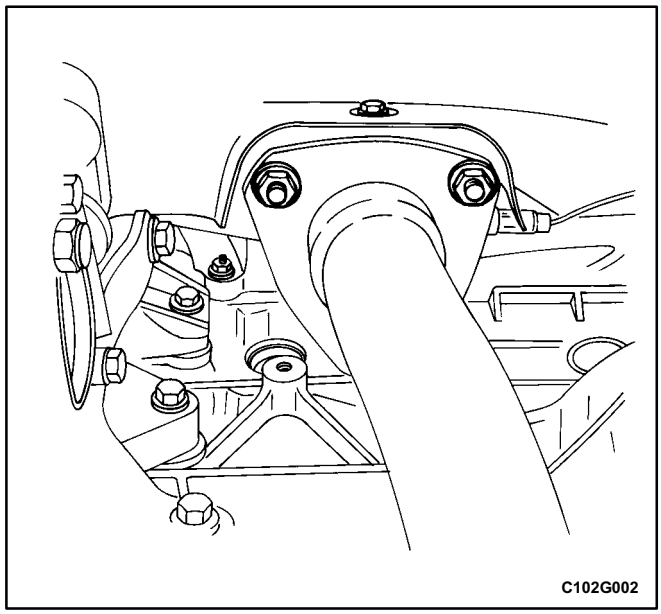

10. Install the gasket between the front exhaust pipe flange and the exhaust manifold.
11. Install the front exhaust pipe to the exhaust manifold using the nuts.

Tighten

Tighten the front exhaust pipe to exhaust manifold nuts to 40 N•m (30 lb•ft).

12. Install the splash guard. Refer to *Section 9N, Frame and Underbody*.

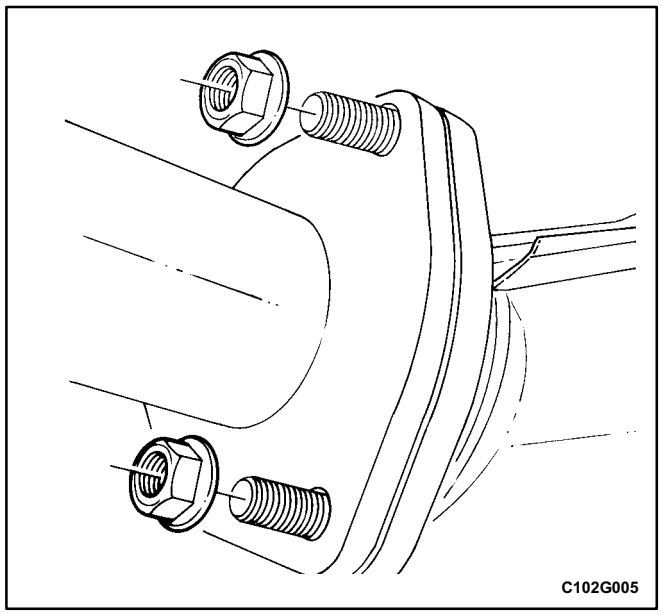

MUFFLER - FRONT

Removal Procedure

1. Remove the nuts that secure the front muffler pipe to the catalytic converter (or the dummy catalytic converter) flange.
2. Remove the gasket.

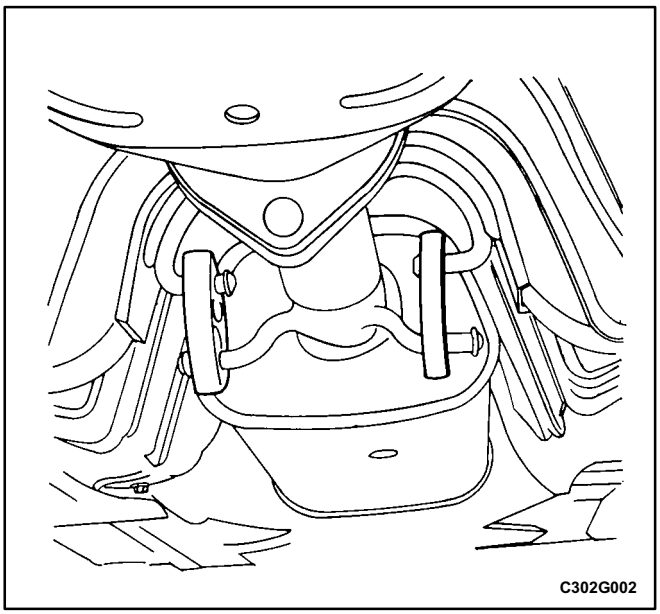

3. Remove the front muffler from the rubber hangers.

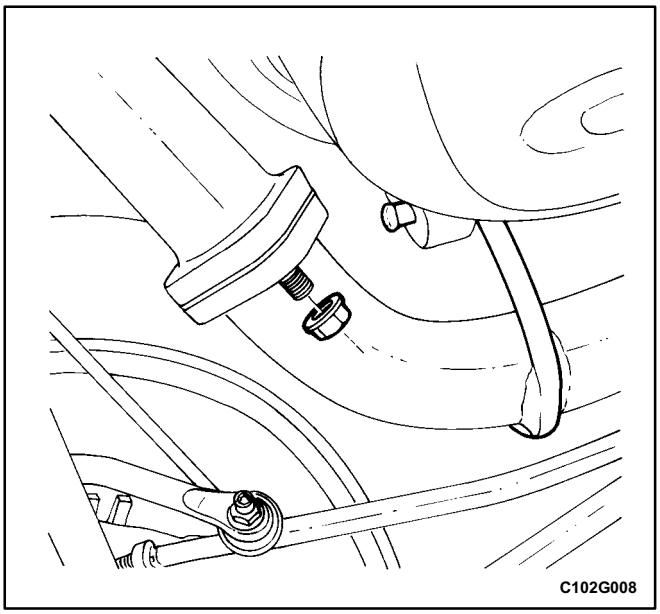

4. Remove the nuts that secure the front muffler pipe flange to the rear muffler pipe flange.
5. Remove the gasket from between the front muffler pipe flange and the rear muffler pipe flange.
6. Disconnect the front muffler pipe from the rubber hanger.
7. Remove the front muffler pipe.
8. Check the exhaust pipe and the front muffler pipe for holes, damage, open seams, or other deterioration which could permit exhaust fumes to seep into the passenger compartment or the trunk.

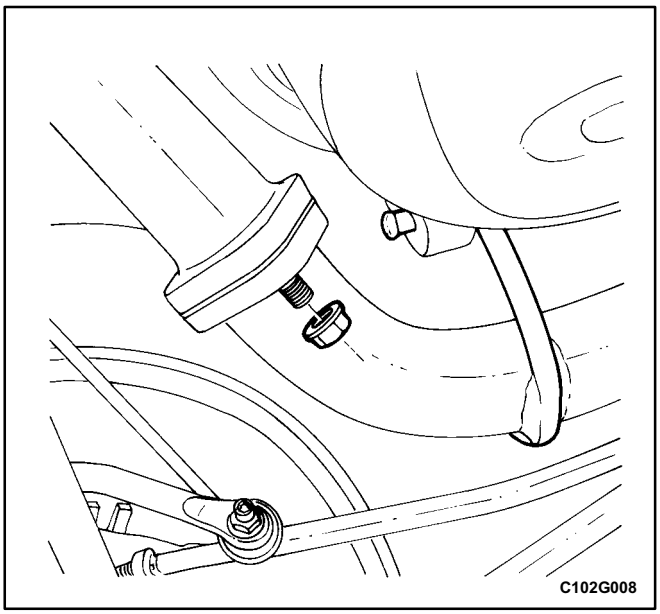

Installation Procedure

1. Install the front muffler pipe to the rubber hanger.
2. Install the gasket to the front muffler pipe.
3. Install the front muffler pipe to the rear muffler pipe with the nuts.

Tighten

Tighten the front muffler pipe to rear muffler pipe nuts to 30 N•m (22 lb•).

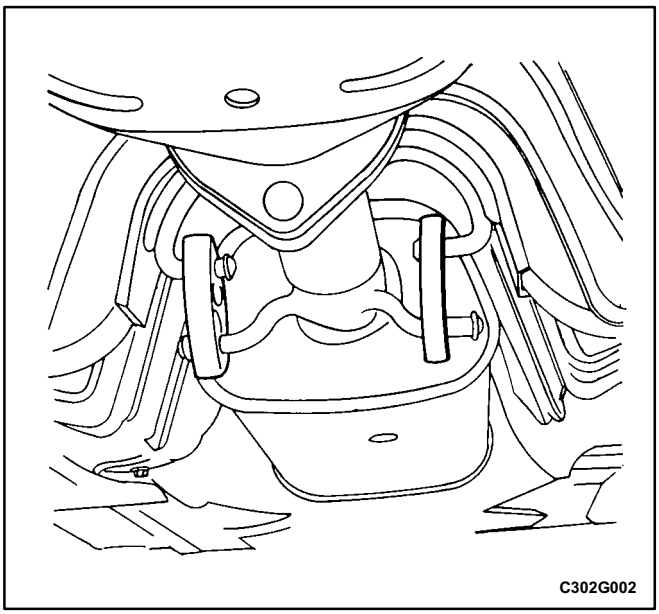

4. Install the front muffler assembly to the rubber hangers.
5. Install the front muffler pipe to the catalytic converter (or the dummy catalytic converter) flange.

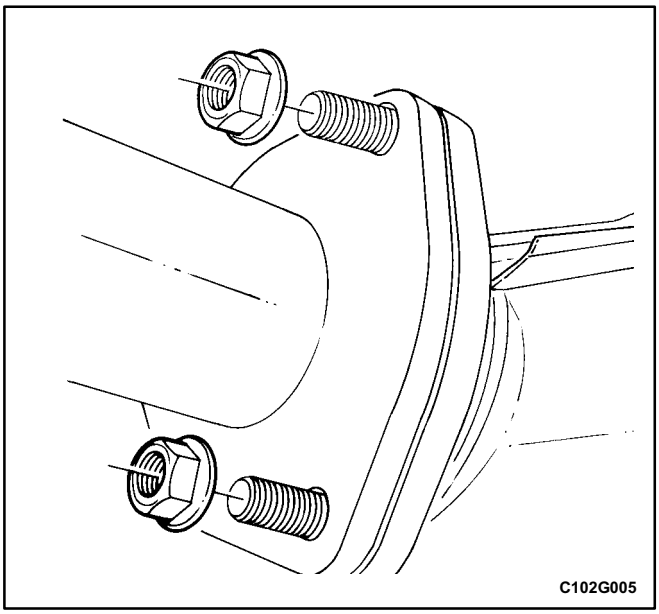

6. Install the nuts to secure the front muffler pipe to the catalytic converter (or the dummy catalytic converter).

Tighten

Tighten the front muffler pipe to catalytic converter (or the dummy catalytic converter) nuts to 30 N•m (22 lb•).

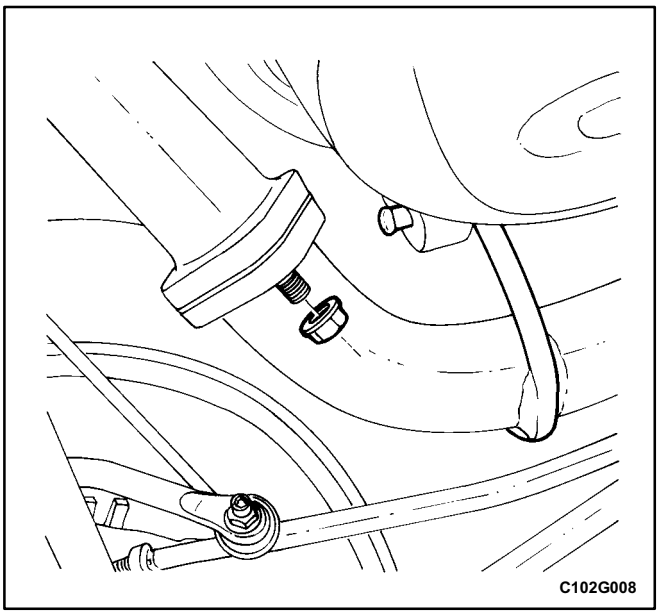

MUFFLER - REAR

Removal Procedure

1. Remove the nuts that attach the rear muffler pipe flange to the front muffler pipe flange.
2. Remove the gasket from between the rear muffler pipe flange and the front muffler pipe flange.

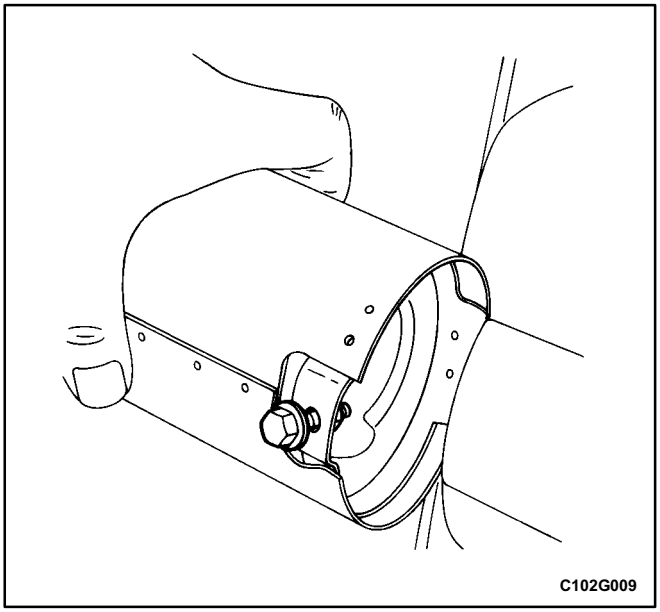

3. Loosen the bolt that secures the trim ring to the rear muffler pipe.
4. Remove the trim ring.

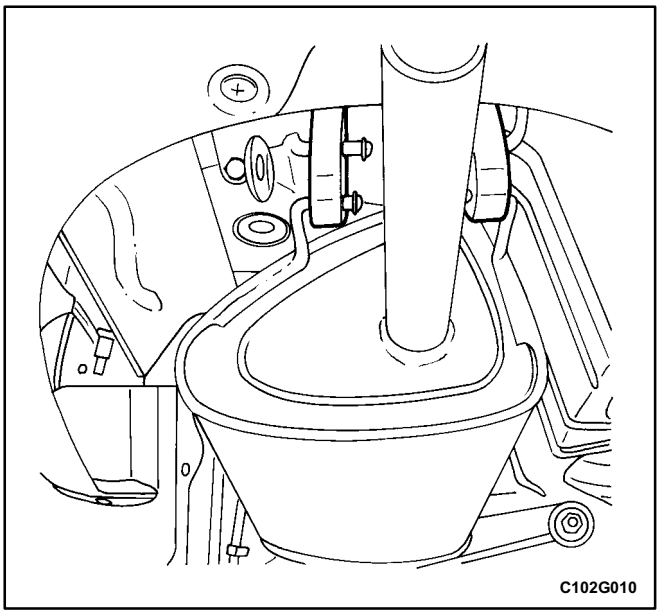

5. Detach the rear muffler from the rubber hangers on the tail pipe end of the rear muffler assembly.
6. Remove the rear muffler assembly.
7. Check the rear muffler and the pipes for holes, damage, open seams, and other deterioration which could permit exhaust fumes to seep into the passenger compartment or the trunk.

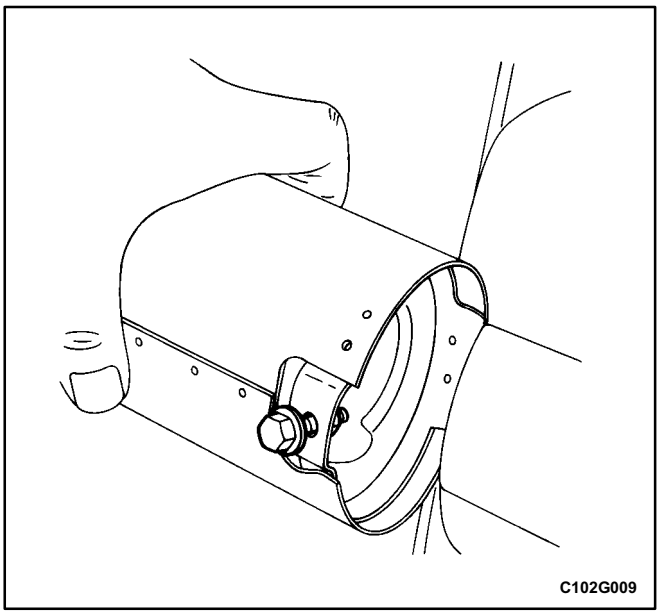

Installation Procedure

1. Place the exhaust tail pipe trim ring on the rear muffler pipe.
2. Secure the exhaust pipe trim ring on the rear muffler pipe with the bolt.

Tighten

Tighten the rear muffler pipe to exhaust trim ring bolt to 15 N•m (11 lb•ft).

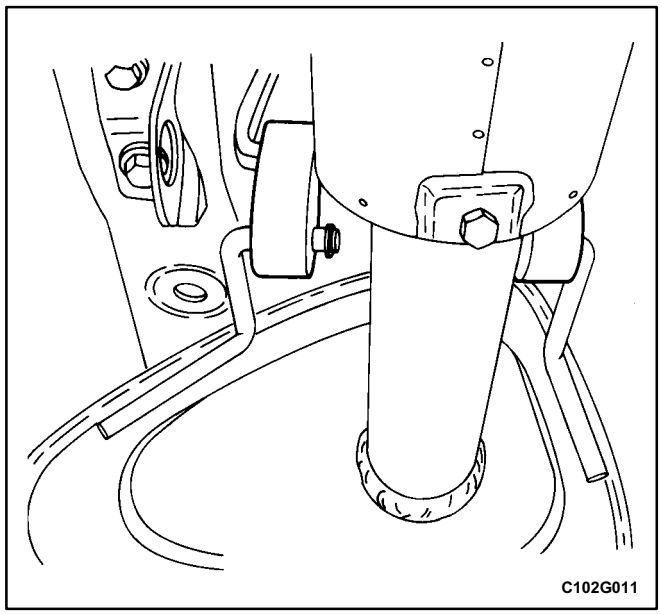

3. Install the rear muffler assembly on the rubber hangers.

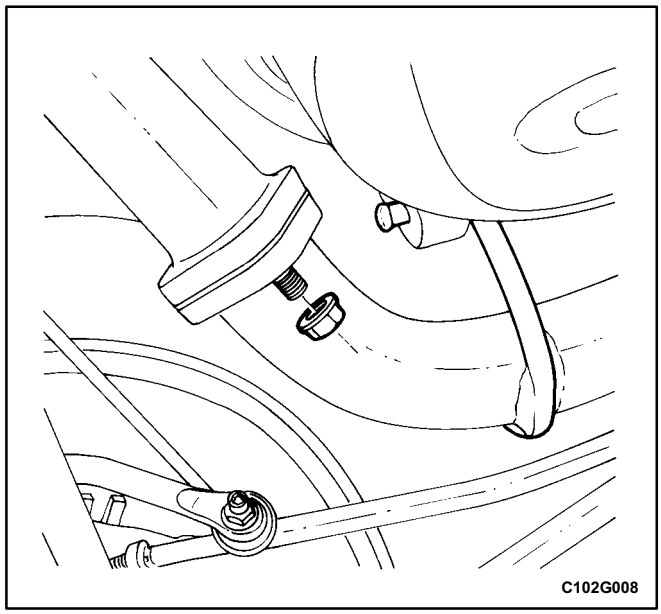

4. Install the gasket between the rear muffler pipe flange and the front muffler pipe flange.
5. Install the front muffler pipe to the rear muffler pipe with the nuts.

Tighten

Tighten the front muffler pipe to rear muffler pipe nuts to 30 N•m (22 lb•ft).

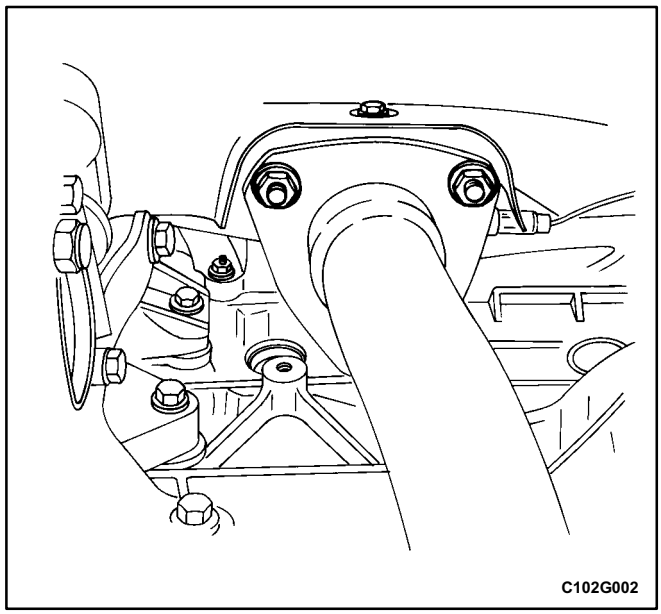

EXHAUST PIPE

Removal Procedure

1. Remove the splash guard. Refer to *Section 9N, Frame and Underbody.*
2. Remove the front exhaust pipe nuts and the gasket from the exhaust manifold.

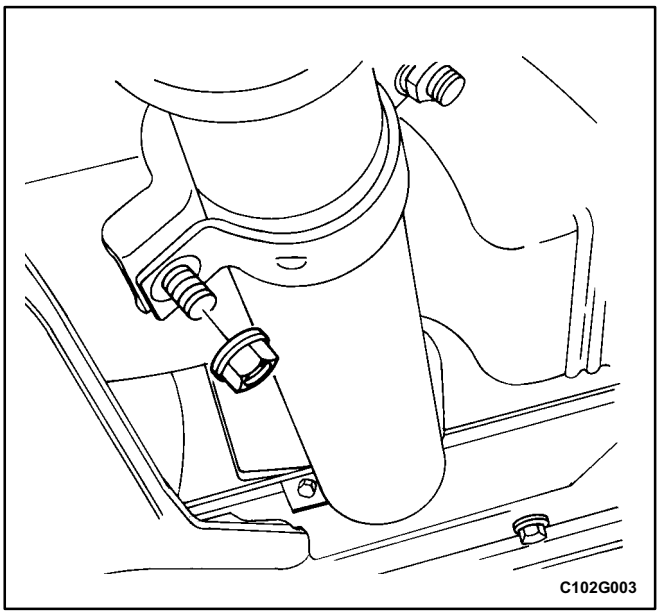

3. Remove the locking nuts from the lower front exhaust pipe mounting bracket which attaches to the welded bolts of the upper front exhaust pipe mounting bracket.
4. Remove the lower front exhaust pipe bracket from the front exhaust pipe.
5. Remove the front exhaust pipe from the upper front exhaust pipe mounting bracket.

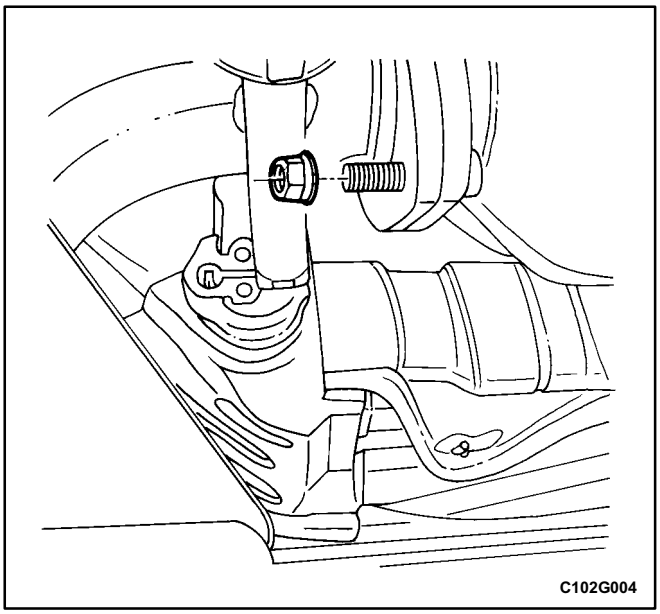

6. Disconnect the front exhaust pipe from the rubber ring hangers near where the front exhaust pipe flange connects to the catalytic converter (or the dummy catalytic converter) flange.
7. Remove the nuts that secure the front exhaust pipe flange to the catalytic converter (or the dummy catalytic converter) flange.
8. Remove the front exhaust pipe and the gasket.
9. Check the front exhaust pipe and the catalytic converter (or the dummy catalytic converter) for holes, damage, open seams, or other deterioration which could permit exhaust fumes to seep into the passenger compartment or the trunk.
10. Clean the sealing surfaces on the front exhaust pipe flange and the exhaust manifold.

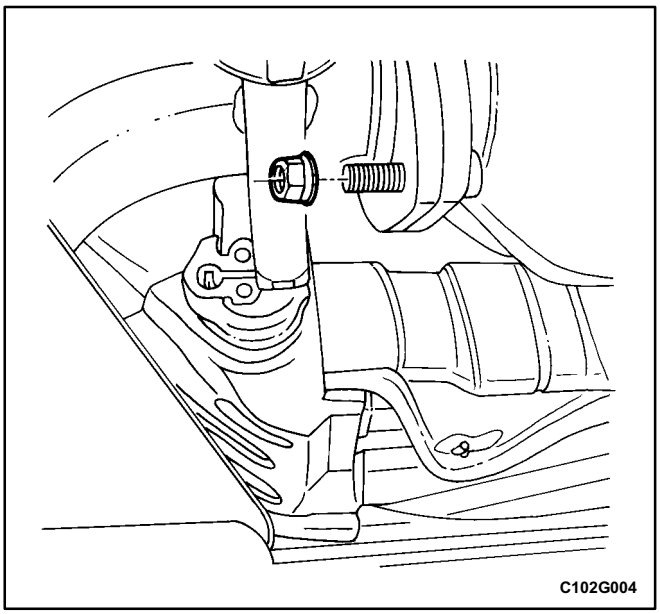

Installation Procedure

1. Install the front exhaust pipe on the rubber ring hangers.
2. Install the gasket between the front exhaust pipe and the catalytic converter (or the dummy catalytic converter).
3. Install the front exhaust pipe to the catalytic converter (or the dummy catalytic converter) using the nuts.

Tighten

Tighten the front exhaust pipe to catalytic converter (or the dummy catalytic converter) nuts to 30 N•m (22 lb•ft).

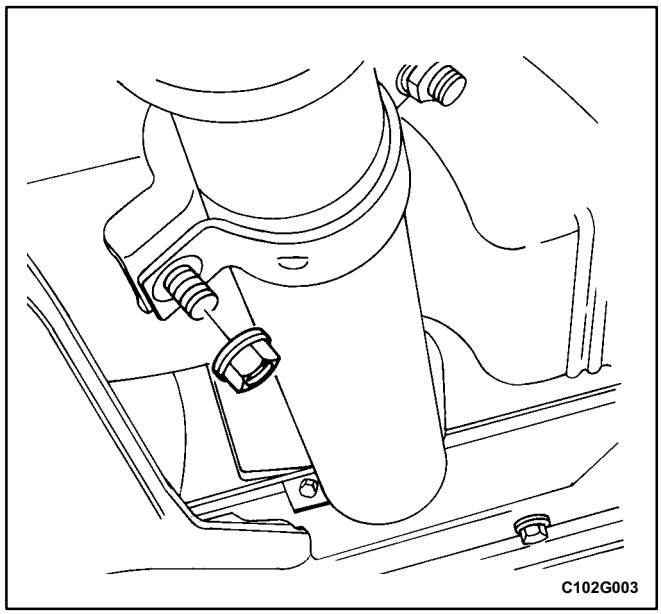

4. Install the front exhaust pipe into the upper front exhaust pipe mounting bracket.
5. Install the lower front exhaust pipe mounting bracket onto the front exhaust pipe.
6. Use the nuts to secure the lower front exhaust pipe mounting bracket to the welded bolts of the upper front exhaust pipe mounting bracket.

   Tighten

   Tighten the lower front exhaust pipe mounting bracket nuts to 30 N•m (22 lb•ft).

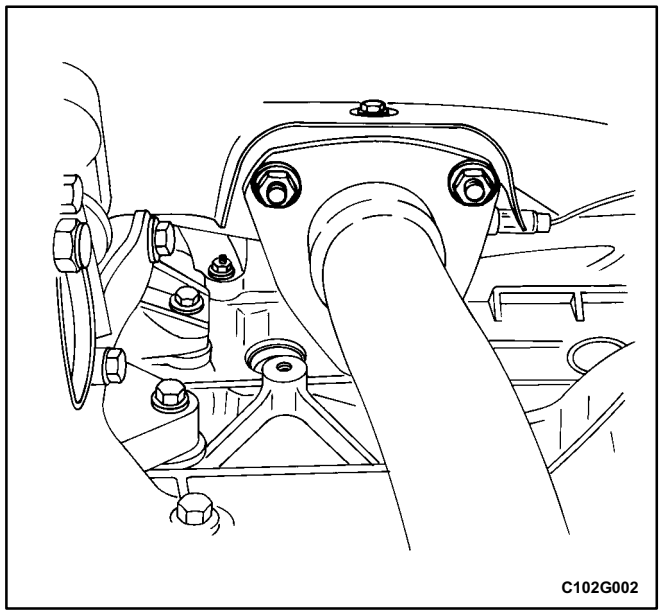

7. Install the front exhaust pipe and the gasket to the exhaust manifold using the nuts.

   Tighten

   Tighten the front exhaust pipe to exhaust manifold nuts to 40 N•m (30 lb•ft).
8. Install the splash guard. Refer to *Section 9N, Frame and Underbody*.

GENERAL DESCRIPTION AND SYSTEM OPERATION

EXHAUST SYSTEM

Notice: When you are inspecting or replacing exhaust system components, make sure there is adequate clearance from all points on the underbody to avoid possible overheating of the floor pan and possible damage to the passenger compartment insulation and trim materials.

Check the complete exhaust system and the nearby body areas and trunk lid for broken, damaged, missing or mispositioned parts, open seams, holes, loose connections, or other deterioration which could permit exhaust fumes to seep into the trunk or passenger compartment. Dust or water in the trunk may be an indication of a problem in one of these areas. Any defects should be corrected immediately.

The exhaust manifold to front exhaust pipe connection is a flex joint.

MUFFLER

Aside from the exhaust manifold connection, the exhaust system uses a flange and seal joint design rather than a slip joint coupling design with clamp and U bolts. The exhaust manifold to exhaust pipe connection is a flex joint. If holes, open seams, or any deterioration is discovered upon inspection of the front muffler and pipe assembly, the complete assembly should be replaced. The same procedure is applicable to the rear muffler assembly.

Heat shields for the front and rear muffler assembly and the catalytic converter protect the vehicle and the environment from the high temperatures that the exhaust system develops.

CATALYTIC CONVERTER

Notice: When jacking or lifting the vehicle from the body side rails, be certain that the lift pads do not contact the catalytic converter, as this could damage the catalytic converter.

Notice: Use of anything other than unleaded fuel will damage the catalyst in the catalytic converter.

The catalytic converter is an emission control device added to the exhaust system to reduce pollutants from the exhaust pipes.

The oxidation catalyst is coated with a catalytic material containing platinum and palladium, which reduces levels of hydrocarbon (HC) and carbon monoxide (CO) from the exhaust gas. The three way catalyst has coatings which contain platinum and rhodium, which additionally lower the levels of oxides of nitrogen (NOx).

DUMMY CATALYTIC CONVERTER

A dummy catalytic converter is used in place of the catalytic converter for those vehicles using leaded fuel to reduce exhaust noise.

SUSPENSION

CONTENTS

SECTION 2A SUSPENSION DIAGNOSIS

SECTION 2B WHEEL ALIGNMENT

SECTION 2C FRONT SUSPENSION

SECTION 2D REAR SUSPENSION

SECTION 2E TIRES AND WHEELS

SECTION 2A

SUSPENSION DIAGNOSIS

TABLE OF CONTENTS

Diagnosis 2A-1
General Diagnosis 2A-1
Torque Steer 2A-5
Hub and Bearing 2A-6

DIAGNOSIS

GENERAL DIAGNOSIS

Problems in the steering, the suspension, the tires, and the wheels involve several systems. Consider all systems when you diagnose a complaint. Some problems, such as abnormal or excessive tire wear and scuffed tires, may be the result of hard driving. Always road test the vehicle first. If possible, do this road test with the customer.

Proceed with the following preliminary checks. Correct any substandard conditions.

Preliminary Checks

Checks	Action
Inspect the tires for improper pressure and uneven wear.	Inflate the tires to the proper pressure.
Inspect the joint from the steering column to the steering gear for loose connections or wear.	Tighten the intermediate shaft pinch bolts. Replace the intermediate shaft as needed.
Inspect the front and the rear suspension, the steering gear, and the linkage for loose or damaged parts.	Tighten the front and the rear suspension. Tighten the steering gear mounting bracket bolts. Tighten the intermediate shaft pinch bolts. Replace the front and the rear suspension as needed. Replace the steering gear as needed. Replace the intermediate shaft as needed.
Inspect for outofround tires.	Perform free runout test. Matchmount the tires.
Inspect for outofbalance tires, bent wheels, and worn or loose wheel bearings.	Balance the wheels. Replace the wheels. Replace the wheel bearings.
Check the power steering pump serpentine belt tension.	Tighten the power steering pump serpentine belt.
Inspect the power steering system for leaks. Also check the power steering fluid level.	Repair any leaks. Perform a power steering system test. Add power steering fluid as needed.

Car Lead/Pull

Checks	Action
Inspect for mismatched or uneven tires.	Replace the tires.
Inspect for a broken or a sagging spring.	Replace the spring.
Inspect for a radial tire lateral force.	Check the wheel alignment. Switch the tire and wheel assemblies. Replace the tires as needed.
Check the frontwheel alignment.	Align the front wheels.
Inspect for an offcenter steering gear.	Reseat the pinion valve assembly. Replace the pinion valve assembly as needed.
Inspect for frontbrake dragging.	Adjust the front brakes.

Abnormal or Excessive Tire Wear

Checks	Action
Check the front wheel and rear wheel alignment.	Align the front and the rear wheels.
Inspect for excessive toe on the front and rear wheels.	Adjust the toe on the front and rear wheels.
Inspect for a broken or a sagging spring.	Replace the spring.
Inspect for out of balance tires.	Balance the tires.
Inspect for worn strut dampeners.	Replace the strut dampeners.
Check for a failure to rotate tires.	Rotate the tires. Replace the tires as needed.
Check for an overloaded vehicle.	Maintain the proper load weight.
Inspect for low tire inflation.	Inflate the tires to the proper pressure.

Scuffed Tires

Checks	Action
Inspect for incorrect toe on the front and rear wheels.	Adjust the toe on the front and rear wheels.
Inspect for a twisted or a bent suspension arm.	Replace the suspension arm.

Wheel Tramp

Checks	Action
Inspect for an out of balance tire or wheel.	Balance the tire or the wheel.
Inspect for improper strut dampener action.	Replace the strut dampeners.

Shimmy, Shake, or Vibration

Checks	Action
Inspect for an out of balance tire or wheel.	Balance the tire or the wheel.
Inspect for excessive wheel hub runout.	Measure the hub flange runout. Replace the hub as needed.
Inspect for excessive brake drum or brake rotor imbalance.	Adjust the brakes. Replace the brake rotor or the brake drum as needed.
Inspect for worn tie rod ends.	Replace the outer tie rods.
Inspect for wheel trim imbalance.	Balance the wheel.
Inspect for a worn lower ball joint.	Replace the lower ball joint.
Inspect for excessive wheel runout.	Measure the wheel runout. Replace the wheel as needed.
Inspect for excessive loaded radial runout on the tire and wheel assembly.	Match mount the tire and wheel assembly.

Hard Steering

Checks	Action
Check the steering gear preload adjustment.	Perform a rack bearing preload adjustment.
Check the hydraulic system. Test the power steering system pressure with a gauge.	Replace the seals and the hoses as needed.
Inspect for binding or catching in the steering gear.	Lubricate the steering gear. Repair or replace the steering gear as needed.
Inspect for a loose steering gear mounting.	Tighten the steering gear mounting bracket nuts and bolts.

Too Much Play in Steering

Checks	Action
Inspect for worn or loose front wheel bearings.	Replace the front wheel bearings.
Inspect for a loose steering gear mounting.	Tighten the steering gear mounting bracket nuts and bolts.
Inspect the joint from the column to the steering gear for loose connections or wear.	Tighten the intermediate shaft pinch bolts. Replace the intermediate shaft as needed.
Check the steering gear preload adjustment.	Perform a rack bearing preload adjustment.

Poor Returnability

Checks	Action
Inspect for lack of lubrication of the ball joints and the tie rod ends.	Replace the ball joints and the outer tie rods.
Inspect for binding in the ball joints.	Replace the ball joint.
Inspect for binding in the steering column.	Lubricate the steering column. Replace the steering column as needed.
Check the front wheel alignment.	Align the front wheels.
Check the steering gear preload adjustment.	Perform a rack bearing preload adjustment.
Inspect for a sticking valve.	Lubricate the pinion valve assembly. Replace the pinion valve assembly as needed.
Inspect for binding in the intermediate shaft on the steering gear.	Replace the intermediate shaft.

Abnormal Noise, Front Suspension

Checks	Action
Inspect for a lack of lubrication of the ball joints and the tie rod ends.	Replace the ball joints and the outer tie rods.
Inspect for damaged suspension components.	Replace the damaged suspension components.
Inspect for worn control arm bushings or tie rod ends.	Replace the control arm bushings or the tie rods.
Inspect for a loose stabilizer shaft link.	Tighten the stabilizer shaft link.
Inspect for loose wheel nuts.	Tighten the wheel nuts.
Inspect for loose suspension bolts or nuts.	Tighten the suspension bolts or the nuts.
Inspect for worn strut dampeners or strut mountings.	Replace the strut dampeners. Tighten the strut mounting bolts.
Inspect for an improperly positioned strut spring.	Adjust the strut spring to the proper position.

Wander or Poor Steering Ability

Checks	Action
Inspect for mismatched or uneven tires.	Replace the tires.
Inspect for lack of lubrication of the ball joints and the tie rod ends.	Replace the ball joints and the outer tie rods.
Inspect for worn strut dampeners.	Replace the strut dampeners.
Inspect for a loose stabilizer shaft link.	Tighten the stabilizer shaft link.
Inspect for a broken or a sagging spring.	Replace the spring.
Check the steering gear preload adjustment.	Perform a rack bearing preload adjustment.
Check the front wheel and the rear wheel alignment.	Align the front and the rear wheels.

Erratic Steering when Braking

Checks	Action
Inspect for worn or loose front wheel bearings.	Replace the front wheel bearings.
Inspect for a broken or a sagging spring.	Replace the spring.
Inspect for a leaking wheel cylinder or caliper.	Replace the wheel cylinder or the caliper.
Inspect for warped rotors.	Replace the rotors.
Inspect for an incorrect or an uneven caster.	If the caster is beyond specifications, check the frame and repair it as needed.

Low or Uneven Trim Height

Checks	Action
Inspect for a broken or a sagging spring.	Replace the spring.
Check for an overloaded vehicle.	Maintain the proper load weight.
Inspect for an incorrect or weak spring.	Replace the spring.

Ride Too Soft

Checks	Action
Inspect for worn strut dampeners.	Replace the strut dampeners.
Inspect for a broken or a sagging spring.	Replace the spring.

Ride Too Harsh

Checks	Action
Inspect for incorrect strut dampeners.	Replace the strut dampeners.
Inspect for an incorrect spring.	Replace the spring.

Body Leans or Sways in Corners

Checks	Action
Inspect for a loose stabilizer shaft link.	Tighten the stabilizer shaft link.
Inspect for worn strut dampeners or strut mountings.	Replace the strut dampeners. Tighten the strut assembly mounting bolts.
Check for an overloaded vehicle.	Maintain the proper load weight.
Inspect for a broken or a sagging spring.	Replace the spring.

Suspension Bottoms

Checks	Action
Inspect for worn strut dampeners.	Replace the strut dampeners.
Check for an overloaded vehicle.	Maintain the proper load weight.
Inspect for a broken or a sagging spring.	Replace the spring.

Steering Wheel Kickback

Checks	Action
Inspect for air in the power steering system.	Purge the power steering system of air.
Inspect for a loose steering gear mounting.	Tighten the steering gear mounting bracket nuts and bolts.
Inspect the joint from the column to the steering gear for loose connections or wear.	Tighten the intermediate shaft pinch bolts. Replace the intermediate shaft as needed.
Inspect for loose tie rod ends.	Tighten the tie rod ends. Replace the outer tie rods as needed.
Inspect for loose or worn front wheel bearings.	Replace the front wheel bearings.

Steering Wheel Surges or Jerks

Checks	Action
Check the hydraulic system. Test the power steering system pressure with a gauge.	Replace the seals and the hoses as needed.
Inspect for a sluggish steering gear valve.	Clean the pinion valve assembly. Replace the pinion valve assembly as needed.
Inspect for a loose power steering pump serpentine belt.	Adjust the power steering pump serpentine belt.

Cupped Tires

Checks	Action
Check the front wheel and the rear wheel alignment.	Align the front and the rear wheels.
Inspect for worn strut dampeners.	Replace the strut dampeners.
Inspect for worn or loose wheel bearings.	Replace the wheel bearings.
Inspect for excessive tire or wheel runout.	Match mount the tires. Replace the tires as needed. Replace the wheels as needed.
Inspect for a worn ball joint.	Replace the ball joint.
Check the steering gear preload adjustment.	Perform a rack bearing preload adjustment.

TORQUE STEER

A degree of torque steer to the right may normally be experienced during the use of heavy throttle on some frontwheel drive cars with drive axles of unequal length. This torque steer to the right results from the right drive axle being longer than the left drive axle, which creates a difference in the drive axle angle. Cars with intermediate shaft assemblies have axles of almost equal length.

A difference in the drive axle lengths results in more torque toe in in the left front wheel. You will notice the torque toe in when the vehicle accelerates from a standing start or at lower speeds.

Inspection Procedure

1. Place a small piece of tape at the top center of the steering wheel.
2. Note the inches of steering wheel deflection required to keep the vehicle straight during heavy acceleration.
3. Compare this finding with similar cars.

Factors that may cause torque steer to be more apparent on a particular vehicle include the following:

- Variations in the tire and wheel assemblies. This has the most significant effect on torque steer. A slightly smaller diameter on the right front tire will increase a right torque lead.
- Large differences in the right and the left front tire pressure.
- Looseness in the control arm bushings, the tie rod assemblies, or the steering gear mounting. This looseness permits a front wheel to pull forward and toein under a torque greater than the wheel on the opposite side. A loose suspension component may result in an opposite lead upon deceleration.
- A high front trim height. This height would increase the drive axle angle and could cause wobble at speeds between 24 to 48 km/h (15 to 30 mph).
- Binding or a tight drive axle joint. A tight drive axle joint or a high front trim height may also cause a wobble at speeds between 24 to 48 km/h (15 to 30 mph).
- Incorrect, worn, or loose engine mounts causing adverse drive angles.

Refer to ``General Diagnosis'' in this section for actions to remedy these problems.

Conditions that may produce an effect similar to torque steer include the following:

- Incorrect front or rear alignment.

- Frame misalignment or defect.
- Front suspension damage.
- Incorrectly mounted rear crossmember.

HUB AND BEARING

Perform the following test to check for looseness in the hub and bearing assembly:

1. Raise and suitably support the vehicle.
2. Remove the rear wheel. Refer to *Section 2E, Tires and Wheels*.
3. Remove the brake disc caliper and the brake rotor. Refer to *Section 4E, Rear Disc Brakes*.
4. Mount a dial indicator set with a magnetic base to a stationary part of the vehicle.
5. Push and pull the wheel hub by hand. If the wheel hub movement exceeds 0.05 mm (0.002 inch), replace the hub and bearing assembly. Refer to *Section 2D, Rear Suspension.*
6. Install the brake disc caliper and the brake rotor. Refer to *Section 4E, Rear Disc Brakes*.
7. Install the rear wheel. Refer to *Section 2E, Tires and Wheels.*
8. Lower the vehicle.

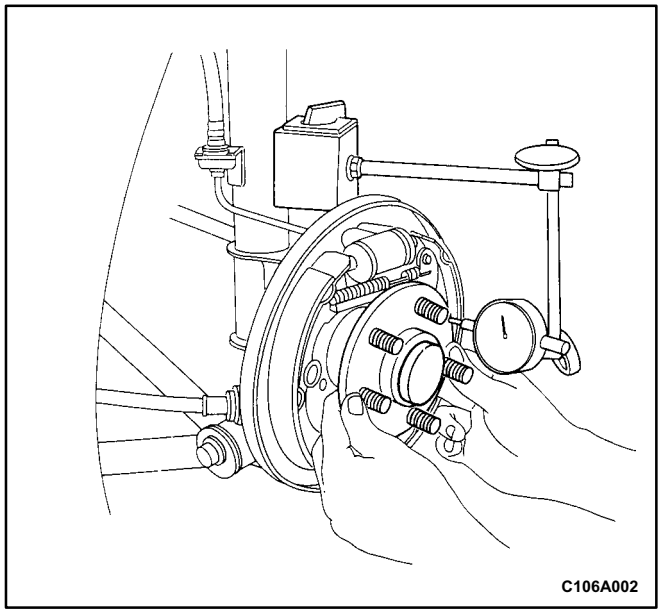

SECTION 2B

WHEEL ALIGNMENT

TABLE OF CONTENTS

Specifications 2B-1
Wheel Alignment Specifications 2B-1
Difference Between Left and Right 2B-1
Fastener Tightening Specifications 2B-1
Diagnosis 2B-2
Tire Diagnosis 2B-2
Radial Tire Lead/Pull 2B-3
Vibration Diagnosis 2B-5
Preliminary Inspection 2B-8
Front Toe Adjustment 2B-8
Front Camber and Caster Check 2B-9
Rear Camber Check 2B-9
Rear Toe Adjustment 2B-9
General Description and System Operation 2B-10
Four Wheel Alignment 2B-10
Toe 2B-10
Caster 2B-10
Camber 2B-10
Steering Axis Inclination 2B-10
Included Angle 2B-10
Scrub Radius 2B-10
Setback 2B-10
Turning Angle 2B-10

SPECIFICATIONS

WHEEL ALIGNMENT SPECIFICATIONS

Application	Front	Rear
Camber	−0.2° ± 1.0°	−0.8° ± 1.0°
Caster	3.0° ± 1.0°	-
Toein at each side (2 person load)	−0.1° ± 0.08°	0.16° ± 0.08°

DIFFERENCE BETWEEN LEFT AND RIGHT

Application	Front	Rear
Camber	1° max	30′ max.
Caster	1° max	-
Toe in	-	15′ max.

FASTENER TIGHTENING SPECIFICATIONS

Application	N•m	Lb•	Lb•In
Front Toe Adjusting Nut	22	16	-
Rear Toe Adjusting Screw Jam Nut	70	52	-

DIAGNOSIS

TIRE DIAGNOSIS

Irregular and Premature Wear

Irregular and premature tire wear has many causes. Some of them are incorrect inflation pressures, lack of regular rotation, poor driving habits, or improper wheel alignment. If the wheel alignment is reset because of tire wear, always reset the toe as close to 0 degrees as the specification allows. Refer to ``Rear Toe Adjustment'' in this section.

Rotate the tires if

- The front tire wear is different from the rear.
- The left and right front tire wear is unequal.
- The left and right rear tire wear is unequal.

Check wheel alignment if

- The left and right front tire wear is unequal.
- The wear is uneven across the tread of either front tire.
- The front tire treads are scuffed with ``feather'' edges on the side of the tread ribs or blocks.

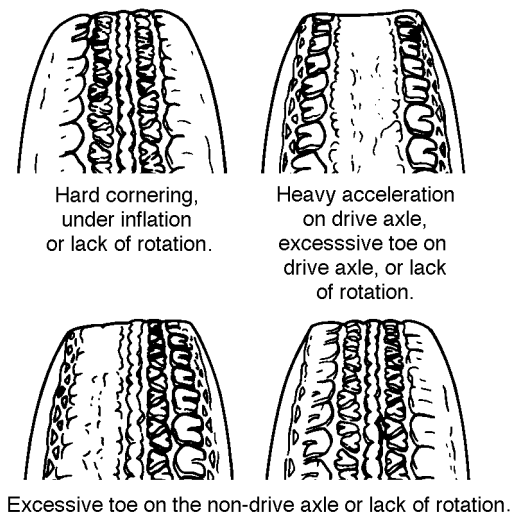

A106B001

Tread Wear Indicators

The original equipment tires have built in tread wear in-dicators to show when the tires need replacement. These indicators appear as bands when the tire tread depth becomes shallow. Tire replacement is reco-mmended when the indicators appear in three or more grooves at six locations.

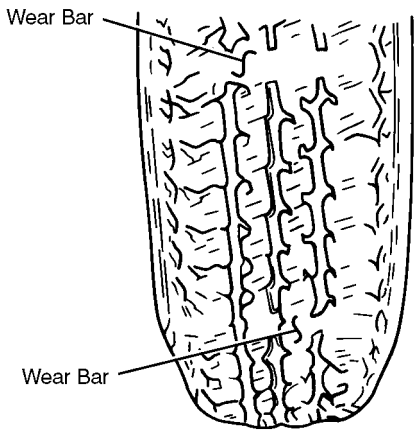

A106B002

Radial Tire Waddle

Waddle is side to side movement at the front or rear of the vehicle. It is caused by the steel belt not being straight within the tire, or by excessive lateral runout of the tire or wheel. It is most noticeable at low speeds, 8 to 48 km/h (5 to 30 mph), but may appear as ride rough-ness at 80 to 113 km/h (50 to 70 mph).

The vehicle must be road tested to determine which end of the vehicle has the faulty tire. The rear of the vehicle will shake from side to side, or ``waddle,'' if the waddle tire is on the rear of the vehicle. From the driver's seat, it feels as though someone is pushing on the side of the vehicle. If the faulty tire is on the front of the vehicle, the waddle is more visual. The front sheet metal appears to be moving back and forth, and the driver's seat feels like the pivot point in the vehicle.

Waddle can be diagnosed using the method of substi-tuting known good tire and wheel assemblies on the problem vehicle.

1. Road test the vehicle to determine if the waddle is coming from the front or the rear of the vehicle.
2. Install good tires and wheels from a similar vehicle in place of those on the offending end of the problem vehicle. If the source of the waddle is not obvious, change the rear tires.

3. Road test the vehicle. If there is improvement, install the original tires to find the offending tire. If there is no improvement, install good tires in place of all four offending tires.
4. Install original tires one at a time to find the offending tire.

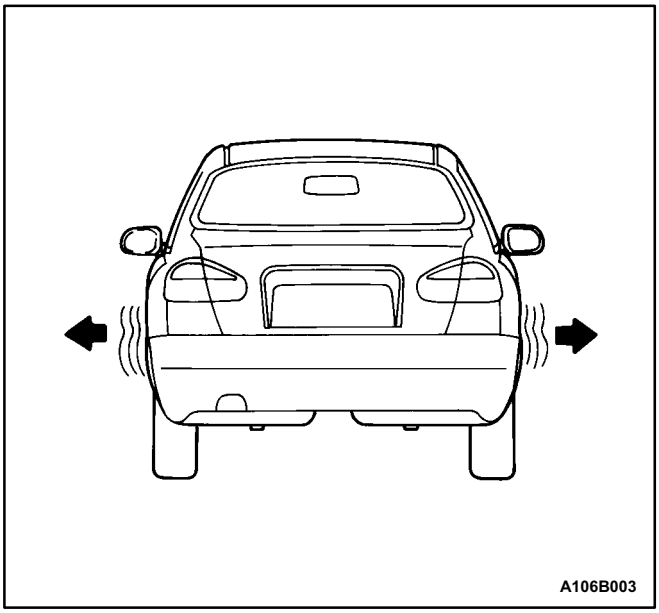

RADIAL TIRE LEAD/PULL

Lead/pull is the deviation of the vehicle from a straight path on a level road with no pressure on the steering wheel. Lead is usually caused by

- Incorrect alignment.
- Uneven brake adjustment.
- Tire construction.

The way in which a tire is built can produce lead/pull in the vehicle. Offcenter belts on radial tires can cause the tire to develop a side force while the vehicle rolls straight down the road. If one side of the tire has even a little larger diameter than the diameter of the other side, the tire will tend to roll to one side. Unequal diameters will cause the tire to develop a side force which can produce vehicle lead/pull.

The radial lead/pull diagnosis chart should be used to determine whether the problem originates from an alignment problem or from the tires. Part of the lead diagnosis procedure calls for tire rotation that is different from the proper tire rotation pattern. If a medium to high mileage tire is moved to the other side of the vehicle, be sure to check for ride roughness. Rear tires will not cause lead/pull.

Radial Tire Lead/Pull Diagnosis Chart

Step	Action	Value(s)	Yes	No
1	1. Perform the wheel alignment preliminary inspection. 2. Check the brakes for dragging. 3. Road test the vehicle. Does the vehicle lead/pull?	-	Go to *Step 2*	System OK
2	1. Cross switch the front wheels. 2. Road test the vehicle. Does the vehicle lead/pull?	-	Go to *Step 3*	System OK
3	Check the front wheel alignment. Is the alignment within specifications?	-	Go to *Step 4*	Adjust alignment
4	Compare the front camber and the front caster to specifications. Are they within specifications?	–	Go to *Step 7*	Go to *Step 5*
5	Check the vehicle frame. Is the frame bent?	-	Go to *Step 6*	Go to *Step 1*
6	Straighten the frame. Is the repair complete?	-	Go to *Step 3*	-
7	1. The probable cause is the tires. 2. Switch the left front wheel with the left rear wheel. 3. Road test the vehicle. Does the vehicle still lead/pull?	-	Go to *Step 9*	Go to *Step 8*
8	Switch the left front wheel with the left rear wheel and replace the left front tire. Is the repair complete?	-	System OK	Go to *Step 1*
9	1. Switch the right front tire and wheel assembly with the right rear tire and wheel assembly. 2. Road test the vehicle. Does the vehicle still lead/pull?	-	Go to *Step 1*	Go to *Step 10*
10	Switch the right front wheel with the right rear wheel and replace the right front tire. Is the repair complete?	-	System OK	Go to *Step 1*

VIBRATION DIAGNOSIS

Wheel imbalance causes most highway speed vibration problems. A vibration can remain after dynamic balancing because

- A tire is out of round.
- A rim is out of round.
- A tire stiffness variation exists.

Measuring tire and wheel free runout will uncover only part of the problem. All three causes, known as loaded radial runout, must be checked using the method of substituting a known good tire and wheel assembly on the problem vehicle.

Low speed vibrations, which occur below 64 km/h (40 mph), are usually caused by runout. High speed vibrations, which occur above 64 km/h (40 mph), can be caused by either imbalance or runout.

Preliminary Checks

Prior to performing any work, always road test the car and perform a careful visual inspection for

- Obvious tire and wheel runout.
- Obvious drive axle runout.
- Improper tire inflation.
- Incorrect trim height.
- Bent or damaged wheels.
- Debris buildup on the tire or the wheel.
- Irregular or excessive tire wear.
- Improper tire bead seating on the rim.
- Imperfections in the tires, including tread deformations, separations, or bulges from impact damage. Slight sidewall indentations are normal and will not affect ride quality.

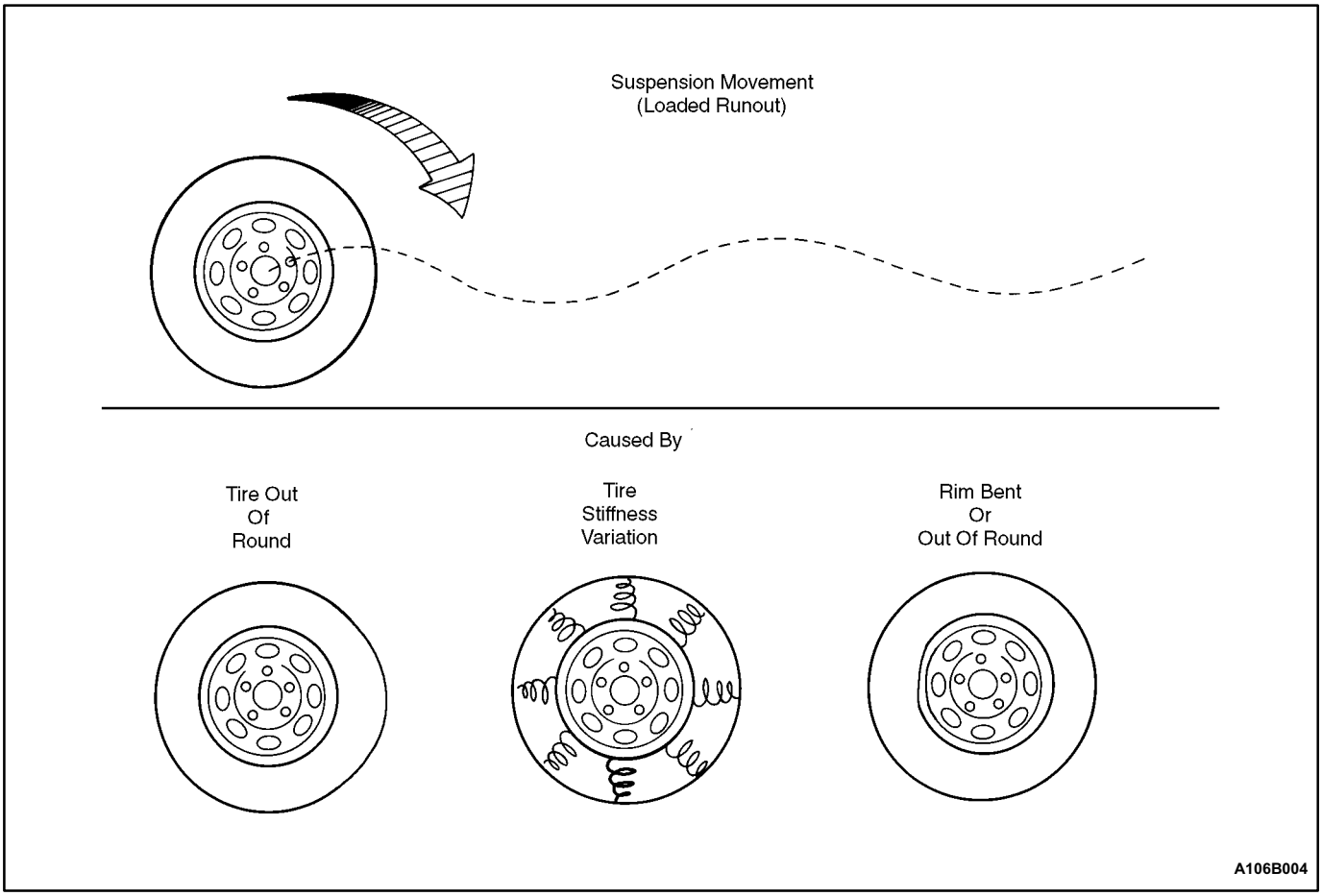

Tire Balancing

Balancing is the easiest procedure to perform and should be done first if the vibration occurs at high speeds. Do an off vehicle, two plane dynamic balance first to correct any imbalance in the tire and wheel assembly.

An on-vehicle finish balance will correct any brake drum, rotor, or wheel cover imbalance. If balancing does not correct the high-speed vibration, or if the vibration occurs at low speeds, runout is the probable cause.

Runout

Runout can be caused by the tire, the wheel, or the way the wheel is attached to the vehicle. To investigate the possibility of wheel runout, refer to the following procedures as well as the "Wheel Runout Diagnosis Chart" in this section.

1. If runout is suspected, measure the on vehicle free lateral and free radial runout of the wheels. Refer to *Section 2E, Tires and Wheels*. Both the free lateral and the free radial runout should be less than 1.5 mm (0.06 inch). If either measurement exceeds this number, proceed to Step 2.
2. Mount the wheel on a dynamic balancing machine and remeasure the free lateral and the free radial runout. Record the amount of the free lateral and the free radial runout and the location of the highest measurement. Refer to *Section 2E, Tires and Wheels*. If the free radial or the free lateral runout

exceeds 1.3 mm (0.05 inch) at the tire tread, proceed to Step 4.

3. Measure the wheel runout. Refer to *Section 2E, Tires and Wheels*. If the runout exceeds specifications, replace the wheel.
4. Deflate the tire and match mount the high radial runout point of the tire to the low radial runout point of the wheel. Reinflate the tire and mount it on the dynamic balancing machine. Measure and record the free radial and the free lateral runout and their locations. In many cases, match mounting the tire on the wheel will bring the wheel's free runout into an acceptable range of 1.3 mm (0.05 inch) or less.
5. If the free runout of the wheel is 1.3 mm (0.05 inch) or less when it was measured off the vehicle, yet exceeds 1.3 mm (0.05 inch) when measured on the vehicle, the attachment of the wheel to the hub is the probable cause of the vibration. Rotate two of the wheel nuts and recheck the runout. Refer to *Section 2E, Tires and Wheels*. Several positions may have to be tried to find the best location for the nuts.
6. If the wheel's free runout cannot be reduced to 1.3 mm (0.05 inch) or less, remove the wheel.
   - 6.1 Measure the hub stud runout using a dial indicator set with a magnetic base.
   - 6.2 Zero the dial indicator set button on one stud.
   - 6.3 Gently lift the set button off the stud. Rotate the flange to position the next stud against the dial indicator set.
   - 6.4 Record the runout of all the studs. The dial indicator should read zero when it is repositioned on the first stud that was checked.
   - 6.5 If the runout exceeds 0.76 mm (0.03 inch), the hub stud or the hub and bearing assembly should be replaced.

Whenever a tire is rotated on the wheel, or whenever a tire or wheel is replaced, rebalance the assembly.

Wheel Runout Diagnosis Chart

Step	Action	Value(s)	Yes	No
1	Road test the vehicle to verify the vibration complaint. Are the customer's concerns verified?	-	Go to *Step 2*	System OK
2	1. Perform a vibration diagnosis preliminary check. 2. Repair any of the problems found. Is the vibration still present?	-	Go to *Step 3*	System OK
3	Determine at what speed the vibration is present. Is the vibration over 64 km/h (40 mph)?	-	Go to *Step 4*	Go to *Step 6*
4	Perform an off vehicle dynamic wheel balance. Is the vibration still present?	-	Go to *Step 5*	System OK
5	Perform an on vehicle finish balance. Is the vibration still present?	-	Go to *Step 6*	System OK
6	Perform a free lateral and a radial on vehicle runout check. Does the runout match the value specified?	1.5 mm (0.06 in.)	Go to *Step 4*	Go to *Step 7*
7	Perform a free lateral and a free radial off vehicle runout check. Does the runout match the value specified?	1.3 mm (0.05 in.)	Go to *Step 8*	Go to *Step 12*
8	1. Index the tire and wheel assembly on the hub studs. 2. Obtain the least amount of runout possible. Does the runout match the value specified?	0.76 mm (0.03 in.)	Go to *Step 9*	Go to *Step 14*
9	Perform an off vehicle dynamic wheel balance. Is the vibration still present?	-	Go to *Step 10*	System OK
10	Perform an on vehicle finish balance. Is the vibration still present?	-	Go to *Step 11*	System OK
11	1. Check for any engine driveline imbalance. 2. Thoroughly inspect the drive axles and the constant velocity joints. 3. Repair any problems found. Are the repairs complete?	-	Go to *Step 1*	-
12	1. Match mount the tire on the wheel. 2. Perform a free lateral and a free radial off vehicle runout check. Does the runout match the value specified?	1.5mm (0.06 in.)	Go to *Step 9*	Go to *Step 13*
13	1. Dismount the tire from the wheel of the suspected assembly. 2. Measure the runout of the wheel. Does the runout match the value specified?	0.8 mm (0.03 in.)	Go to *Step 15*	Go to *Step 16*
14	Measure the hub flange runout. Does the runout match the value specified?	0.76 mm (0.03 in.)	Go to *Step 9*	Go to *Step 17*
15	Replace the tire. Is the repair complete?	-	Go to *Step 1*	-
16	Replace the wheel. Is the repair complete?	-	Go to *Step 1*	-
17	Replace the hub. Is the repair complete?	-	Go to *Step 1*	-

PRELIMINARY INSPECTION

Checks	Action
Check the tires for proper inflation pressures and normal tread wear.	Inflate the tires to the proper tire pressure. Replace the tires as needed.
Check the wheel bearings for looseness.	Replace the front wheel bearing or the rear hub and bearing assembly.
Check for loose ball joints and tie rod ends.	Tighten the ball joints and the tie rods.
Check the runout of the wheels and the tires.	Measure and correct the tire runout.
Check the vehicle trim heights.	Correct the trim heights. Make the correction before adjusting the toe.
Check for loose rack and pinion mounting.	Tighten the mounting brackets for the rack and pinion assembly.
Check for improperly operating struts.	Replace the strut assembly.
Check for loose control arms.	Tighten the control arm attachment bolts. Replace the control arm bushings as needed.

FRONT TOE ADJUSTMENT

Adjustment Procedure

1. Disconnect the outer tie rods from the knuckle assemblies. Refer to *Section 6C, Power Steering Gear*.
2. Loosen the front toe adjusting nut.

Notice: In this adjustment, the right and the left tie rods must be equal in length, or the tires will wear unevenly.

3. Turn the right and the left outer tie rods to align the toe to the proper specifications. Refer to ``Wheel Alignment Specifications'' in this section.
4. Hold the outer tie rod and tighten the front toe adjusting nut.

   ### Tighten

   Tighten the front toe adjusting nut to 22 N•m (16 lbft).
5. Reconnect the outer tie rods to the knuckle assemblies. Refer to *Section 6C, Power Steering Gear*.

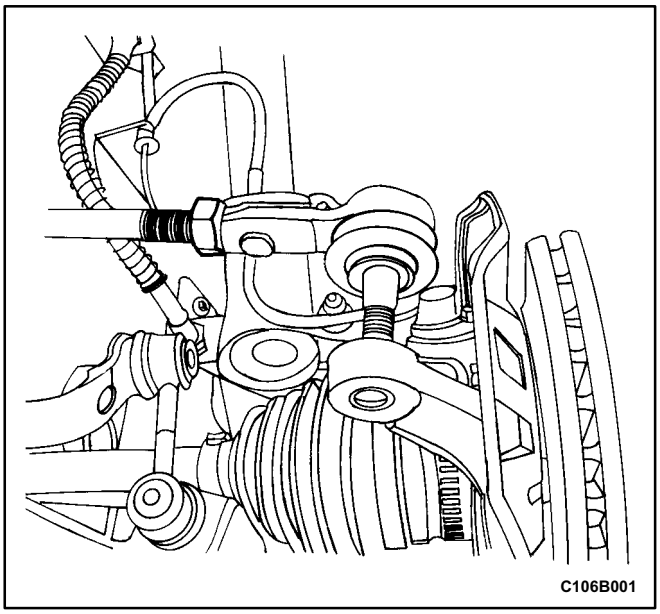

FRONT CAMBER AND CASTER CHECK

The front camber and caster are not adjustable. Refer to ``Wheel Alignment Specifications'' in this section. Jounce the bumper three times before measuring the camber or the caster in order to prevent an incorrect reading. If the front camber or caster measurements deviate from the specifications, locate and replace or repair any damaged, loose, bent, dented, or worn suspension part. If the problem is body related, repair the body.

REAR CAMBER CHECK

The rear camber is not adjustable. Refer to ``Wheel Alignment Specifications'' in this section. If the rear camber deviates from the specification, locate the cause and correct it. If damaged, loose, bent, dented, or worn suspension parts are found, they should be repaired or replaced. If the problem is body related, repair the body.

REAR TOE ADJUSTMENT

Adjustment Procedure

1. Perform a preliminary inspection before any attempt is made to change or correct the wheel alignment factors. Refer to Preliminary Inspection'' in this section.
2. Loosen the toe adjusting screw jam nuts on the rear parallel link.

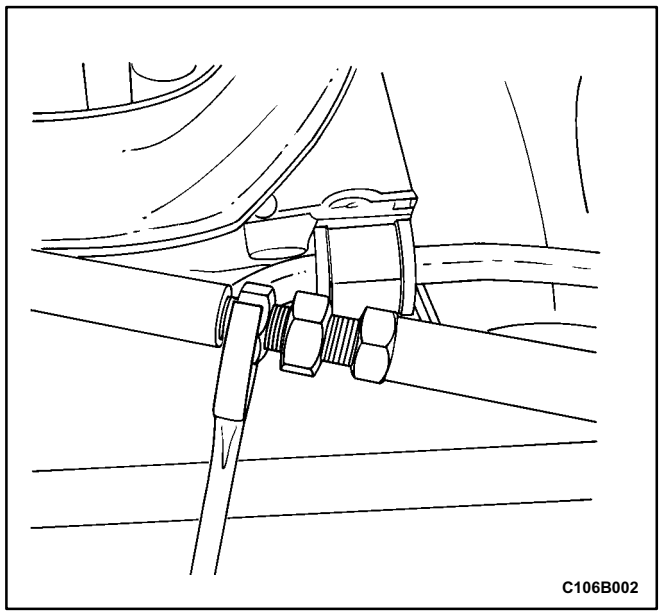

3. Turn the adjustment screw until the preferred rear toe specification is obtained. Refer to "Wheel Alignment Specifications" in this section.

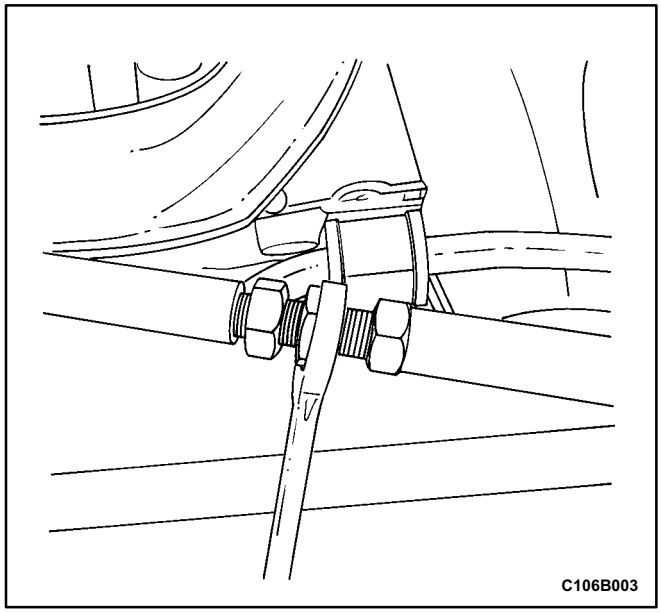

4. Hold the adjustment screw and tighten the toe adjusting screw jam nut.

Tighten

Tighten the toe adjusting screw jam nut to 70 N•m (52 lb•ft).

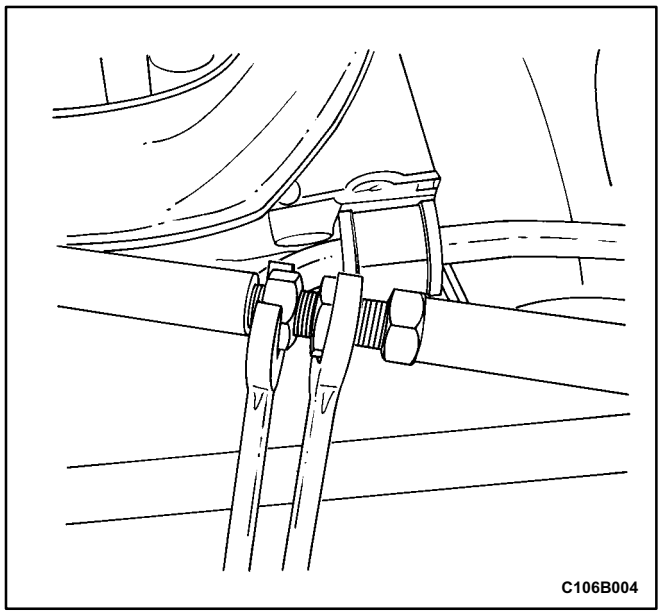

GENERAL DESCRIPTION AND SYSTEM OPERATION

FOUR WHEEL ALIGNMENT

The first responsibility of engineering is to design safe steering and suspension systems. Each component must be strong enough to withstand and absorb extreme punishment. Both the steering system and the front and the rear suspension must function geometrically with the body mass.

The steering and the suspension systems require that the front wheels self return and that the tire rolling effort and the road friction be held to a negligible force in order to allow the customer to direct the vehicle with the least effort and the most comfort.

A complete wheel alignment check should include measurements of the rear toe and camber.

Four-wheel alignment assures that all four wheels will be running in precisely the same direction.

When the vehicle is geometrically aligned, fuel economy and tire life are at their peak, and steering and performance are maximized.

TOE

Toe-in is the turning in of the tires, while toe out is the turning out of the tires from the geometric centerline or thrust line. The toe ensures parallel rolling of the wheels.

The toe serves to offset the small deflections of the wheel support system which occur when the vehicle is rolling forward. The specified toe angle is the setting which achieves 0 degrees of toe when the vehicle is moving.

Incorrect toe in or toe out will cause tire wear and reduced fuel economy. As the individual steering and suspension components wear from vehicle mileage, additional toe will be needed to compensate for the wear.

Always correct the toe dimension last.

CASTER

Caster is the tilting of the uppermost point of the steering axis either forward or backward from the vertical when viewed from the side of the vehicle. A backward tilt is positive, and a forward tilt is negative. Caster influences directional control of the steering but does not affect tire wear. Weak springs or overloading a vehicle will affect caster. One wheel with more positive caster will pull toward the center of the car. This condition will cause the car to move or lean toward the side with the least amount of positive caster. Caster is measured in degrees and is not adjustable.

CAMBER

Camber is the tilting of the top of the tire from the vertical when viewed from the front of the vehicle. When the tires tilt outward, the camber is positive. When the tires tilt inward, the camber is negative. The camber angle is measured in degrees from the vertical. Camber influences both directional control and tire wear.

If the vehicle has too much positive camber, the outside shoulder of the tire will wear. If the vehicle has too much negative camber, the inside shoulder of the tire will wear.

Camber is not adjustable.

STEERING AXIS INCLINATION

Steering axis inclination (SAI) is the tilt at the top of the steering knuckle from the vertical. Measure the SAI angle from the true vertical to a line through the center of the strut and the lower ball joint as viewed from the front of the vehicle.

SAI helps the vehicle track straight down the road and assists the wheel back into the straight ahead position. SAI on front wheel drive vehicles should be negative.

INCLUDED ANGLE

The included angle is the angle measured from the camber angle to the line through the center of the strut and the lower ball joint as viewed from the front of the vehicle.

The included angle is calculated in degrees. Most alignment racks will not measure the included angle directly. To determine the included angle, subtract the negative or add the positive camber readings to the steering axis inclination (SAI).

SCRUB RADIUS

The scrub radius is the distance between true vertical and the line through the center of the strut and lower ball joint to the road surface. Scrub radius is built into the design of the vehicle. Scrub radius is not adjustable.

SETBACK

The setback is the distance in which one front hub and bearing assembly may be rearward of the other front hub and bearing assembly. Setback is primarily caused by a road hazard or vehicle collision.

TURNING ANGLE

The turning angle is the angle of each front wheel to the vertical when the vehicle is making a turn.

SECTION 2C

FRONT SUSPENSION

CAUTION: Disconnect the negative battery cable before removing or installing any electrical unit or when a tool or equipment could easily come in contact with exposed electrical terminals. Disconnecting this cable will help prevent personal injury and damage to the vehicle. The ignition must also be in LOCK unless otherwise noted.

TABLE OF CONTENTS

Specifications 2C-1
General Specifications 2C-1
Fastener Tightening Specifications 2C-2
Special Tools 2C-2
Special Tools Table 2C-2
Diagnosis 2C-3
Strut Dampener 2C-3
Ball Joint and Knuckle 2C-4
Excesive Friction Check 2C-4
Component Locator 2C-6
Front Suspension 2C-6
Maintenance and Repair 2C-8
On-Vehicle Service 2C-8
Stabilizer Shaft and Insulators 2C-8
Stabilizer Link 2C-9
Knuckle Assembly 2C-11
Hub and Bearing 2C-15
Control Arm 2C-16
Strut Assembly 2C-19
Crossmember Assembly 2C-21
Unit Repair 2C-24
Ball Joint 2C-24
Control Arm Bushings 2C-24
Front Strut Assembly 2C-26
Knuckle 2C-29
Crossmember 2C-29
General Description and System Operation 2C-33
Front Suspension 2C-33

SPECIFICATIONS

GENERAL SPECIFICATIONS

Application	Trim Height
Center of Front Wheel to Bottom of Front Wheel Well	379 mm (15 in.)
Center of Rear Wheel to Bottom of Rear Wheel Well	374 mm (14.7 in.)

FASTENER TIGHTENING SPECIFICATIONS

Application	N•m	Lb•Ft	Lb•In
Ball Joint Pinch Bolt Nuts	90	66	-
Ball Joint to Control Arm Nuts	110	81	-
Control Arm Front Bushing Nuts	140	103	-
Control Arm Rear Bushing Clamp Bolts	75	55	-
Crossmember to Body Front Nuts	145	107	-
Crossmember to Body Rear Bolts	145	107	-
Drive Axle to Hub Caulking Nuts (First Torque)	180	133	-
Drive Axle to Hub Caulking Nuts (Last Torque)	50 + 60°	37 +60°	-
Piston Rod Nuts	70	52	-
Stabilizer Link to Control Arm Nuts	45	33	-
Stabilizer Shaft Clamp Bolts	37	27	-
Stabilizer Shaft to Stabilizer Link Nuts	45	33	-
Steering Knuckle to Strut Assembly Nuts	135	100	-
Strut Assembly to Body Nuts	45	33	-

SPECIAL TOOLS

SPECIAL TOOLS TABLE

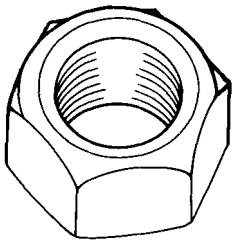 A106C056	**500-20 Hex Nut**
A106C062	**DV-005 Front Strut Mount Nut Wrench**

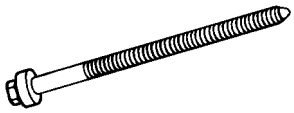 A106C053	**J-36661-2 Forcing Screw**
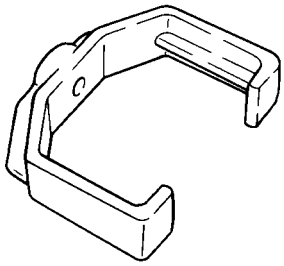 A106C052	**J-37105-40 Support Bridge**

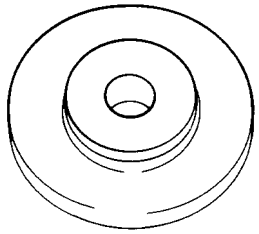 A106C054	**J-37105-B-2 Bearing Adapter**
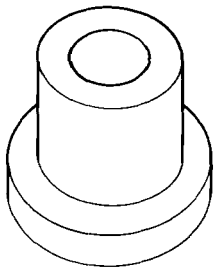 A106C055	**J-37105-B-3 Hub Adapter**
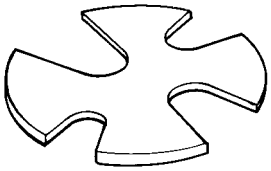 A106C030	**KM-307-B Removal Plate**

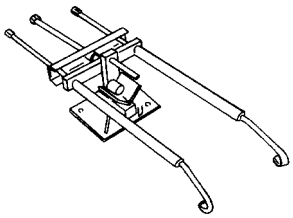 A106C031	**KM-329-A Spring Compressor**
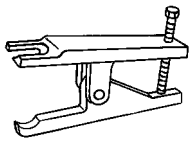 C106C034	**KM-333 Ball Joint Remover**
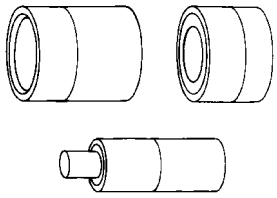 A106C035	**KM-508-A Remover/Installer**

DIAGNOSIS

STRUT DAMPENER

A strut dampener is basically a shock absorber. However, strut dampeners are easier to extend and retract by hand than are shock absorbers.

Struts Seem Weak

Checks	Action
Check the tire pressures.	Adjust the tire pressures to the specifications on the tire placard.
Check the load conditions under which the vehicle is normally driven.	Consult with the owner to confirm the owner's understanding of normal load conditions.
Check the compression and rebound effectiveness of the strut dampener.	Quickly push down and then lift up on the corner of the bumper nearest the strut dampener being tested. Compare the compression and rebound with those of a similar vehicle that has an acceptable ride quality. Replace the strut dampener, if needed.

Struts Are Noisy

Checks	Action
Check the mountings for looseness or damage.	Tighten the strut dampener mounting nuts. Replace the strut dampener, if needed.
Check the compression and rebound effectiveness of the strut dampener.	Quickly push down and then lift up on the corner of the bumper nearest the strut dampener being tested. Compare the compression and rebound with those of a similar vehicle that has an acceptable ride quality. Replace the strut dampener, if needed.

Leaks

Checks	Action
Check for a slight trace of fluid.	The strut dampener is OK.
Check the seal cover on the fully extended strut.	Replace the strut dampener.
Check for an excessive amount of fluid on the strut dampener.	Replace the strut dampener.

BALL JOINT AND KNUCKLE

Ball Joint Inspection

1. Raise the front of the vehicle to allow the front suspension to hang free.
2. Grasp the tire at the top and the bottom.
3. Move the top of the tire in an in and out motion.
4. Look for any horizontal movement of the knuckle relative to the control arm.
5. Ball joints must be replaced under the following conditions:
   - The joint is loose.
   - The ball seal is cut.
   - The ball stud is disconnected from the knuckle.
   - The ball stud is loose at the knuckle.
   - The ball stud can be twisted in its socket with finger pressure.

Ball Stud Inspection

Make sure to check the tightness of the ball stud in the knuckle boss during each inspection of the ball joint. One way to inspect the ball stud for wear is to shake the wheel and feel for movement of the stud end at the knuckle boss.

Another way to inspect the ball stud for wear is to check the fastener torque at the pinch nut. A loose nut can indicate a stressed stud or a hole in the knuckle boss.

Worn or damaged ball joints and knuckles must be replaced.

EXCESSIVE FRICTION CHECK

Use the following procedure to check for excessive friction in the front suspension:

1. Enlist the help of another technician to lift up on the front bumper, raising the vehicle as high as possible.
2. Slowly release the bumper, allowing the vehicle to assume its normal trim height. See „General Specifications” in this section.
3. Measure the distance from the street level to the center of the bumper.
4. Push down on the bumper, release slowly, and allow the vehicle to assume its normal trim height.
5. Measure the distance from the street level to the center of the bumper.
6. The difference between the two measurements should be less than 12.7 mm (0.5 inch). If the difference exceeds this limit, inspect the control arms, the struts, and the ball joints for damage or wear.

BLANK

COMPONENT LOCATOR

FRONT SUSPENSION

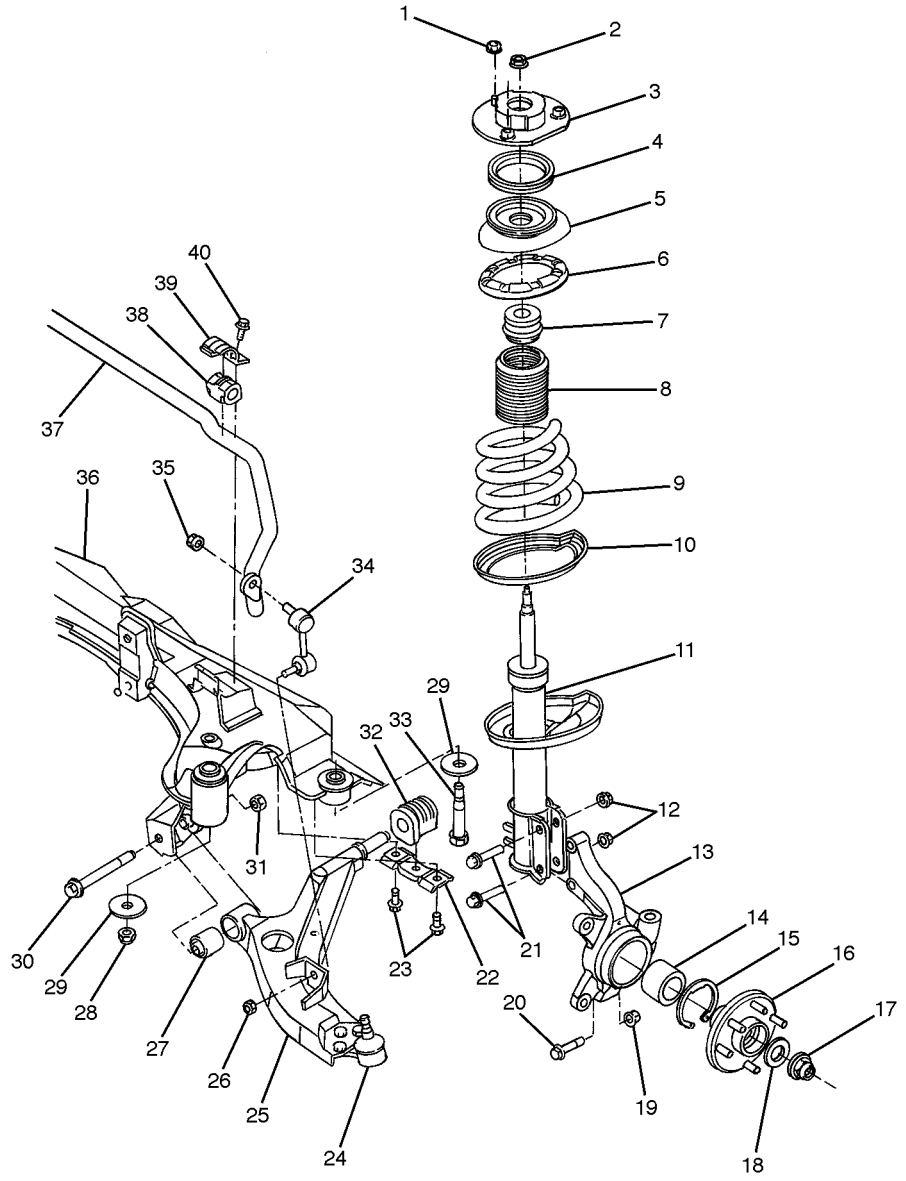

C106C017

1 Strut Mount Body Nut
2 Piston Rod Nut
3 Strut Mount
4 Strut Mount Bearing
5 Upper Spring Seat
6 Upper Spring Insulator
7 Hollow Bumper
8 Piston Rod Boot
9 Front Spring
10 Lower Spring Insulator
11 Strut Dampener
12 Steering Knuckle to Strut Assembly Nut
13 Steering Knuckle
14 Front Wheel Bearing
15 Outer Snap Ring
16 Front Hub
17 Caulking Nut
18 Caulking Nut Washer
19 Ball Joint Pinch Bolt Nut
20 Ball Joint Pinch Bolt
21 Steering Knuckle to Strut Assembly Bolts
22 Control Arm Rear Bushing Clamp
23 Control Arm Rear Bushing Clamp Bolts
24 Ball Joint
25 Control Arm
26 Stabilizer Link to Control Arm Nut
27 Control Arm Front Damping Bushing
28 Crossmember to Body Front Connecting Nut
29 Washer
30 Control Arm Front Bushing Bolt
31 Control Arm Front Bushing Nut
32 Control Arm Rear Damping Bushing
33 Crossmember to Body Rear Bolt
34 Stabilizer Link
35 Stabilizer Shaft to Stabilizer Link Nut
36 Front Suspension Crossmember
37 Stabilizer Shaft
38 Stabilizer Shaft Bushing
39 Stabilizer Shaft Bushing Clamp
40 Stabilizer Shaft Bushing Clamp Bolt

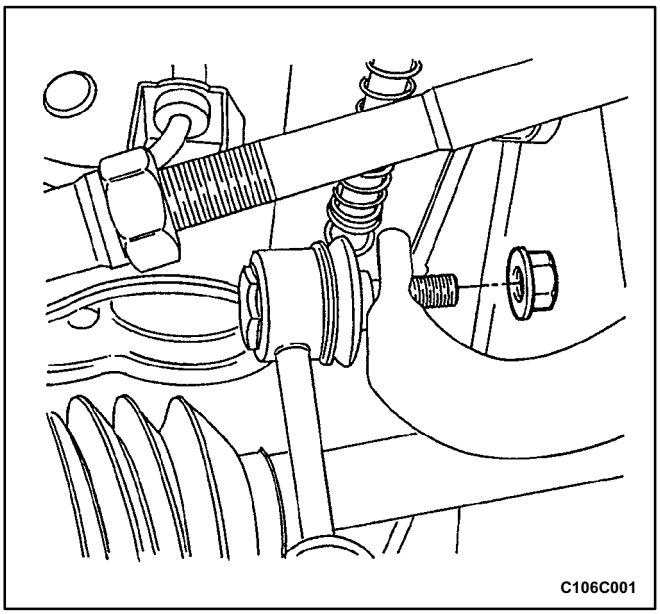

MAINTENANCE AND REPAIR

ON-VEHICLE SERVICE

STABILIZER SHAFT AND INSULATORS

Removal Procedure

1. Raise and suitably support the vehicle.
2. Disconnect the power steering gear. Refer to *Section 6C, Power Steering Gear*.
3. Remove the crossmember front and rear support bolts. Refer to „Crossmember Assembly" in this section.
4. Lower the front crossmember until the stabilizer shaft clamp bolts can be reached.
5. Remove the stabilizer shaft to stabilizer link nuts. Disconnect the stabilizer shaft from the stabilizer links.

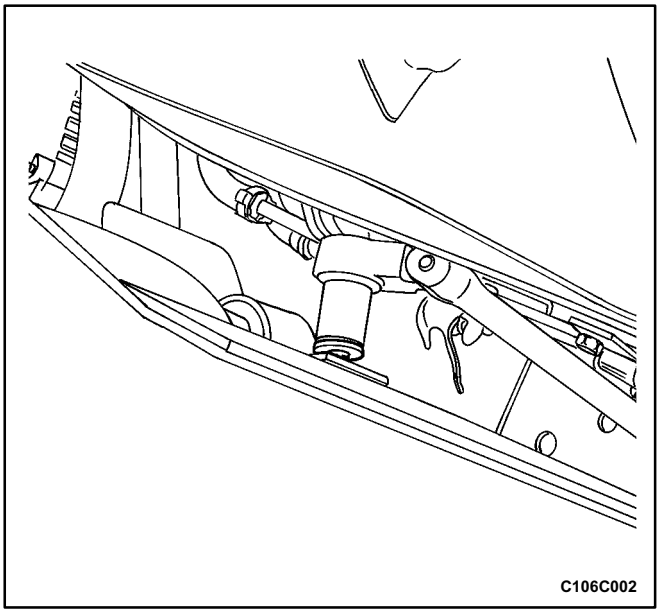

6. Remove the stabilizer shaft clamp bolts.
7. Remove the stabilizer shaft, the stabilizer shaft clamp, and the insulators from the vehicle.

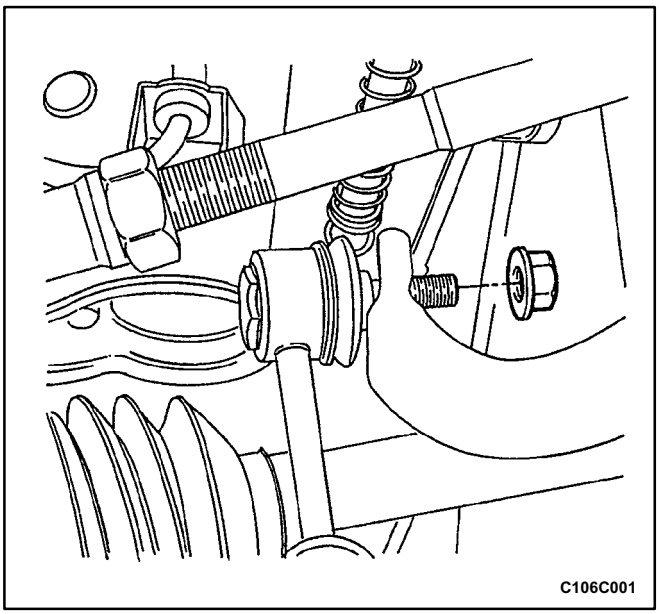

Installation Procedure

Important: The weight of the vehicle must be supported by the control arms before the stabilizer link to control arm nuts are tightened. This can be done by lowering the vehicle onto jack stands under the control arms.

1. Install the stabilizer shaft.
2. Install the stabilizer shaft clamps, the stabilizer shaft clamp bolt, and the insulators. Do not tighten the bolt.
3. Install the stabilizer link onto the stabilizer shaft and connect them with the stabilizer shaft to stabilizer link nuts. Do not tighten.

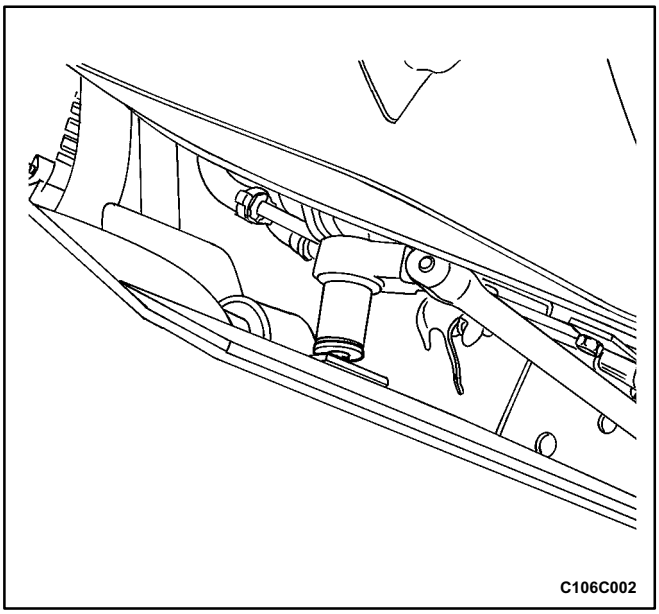

Tighten

Tighten the stabilizer shaft clamp bolts to 37 N•m (27 lb•ft).

4. Raise the front crossmember and install the crossmember front and rear support bolts. Refer to „Crossmember Assembly” in this section.
5. Connect the power steering gear. Refer to *Section 6C, Power Steering Gear*.
6. Lower the vehicle so the control arms are supported by jack stands.

Tighten

Tighten the stabilizer shaft to stabilizer link nuts to 45 N•m (33 lb•ft).

7. Remove the jack stands and lower the vehicle.

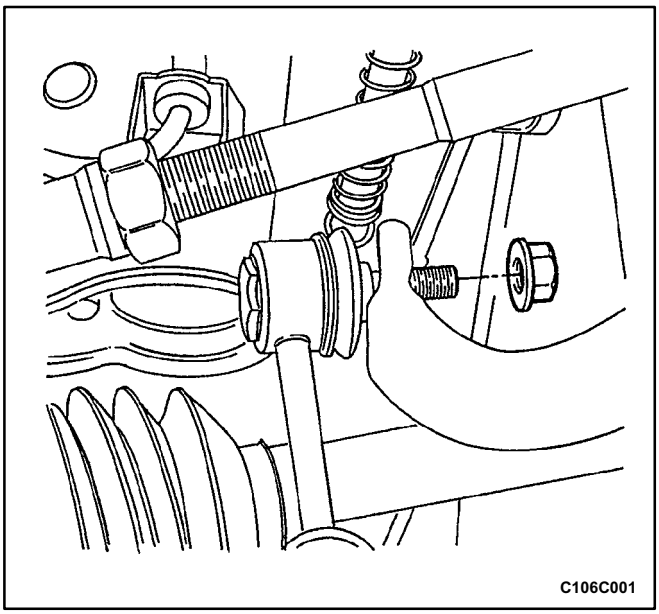

STABILIZER LINK

Removal Procedure

1. Raise and suitably support the vehicle.
2. Remove the stabilizer shaft to stabilizer link nut.

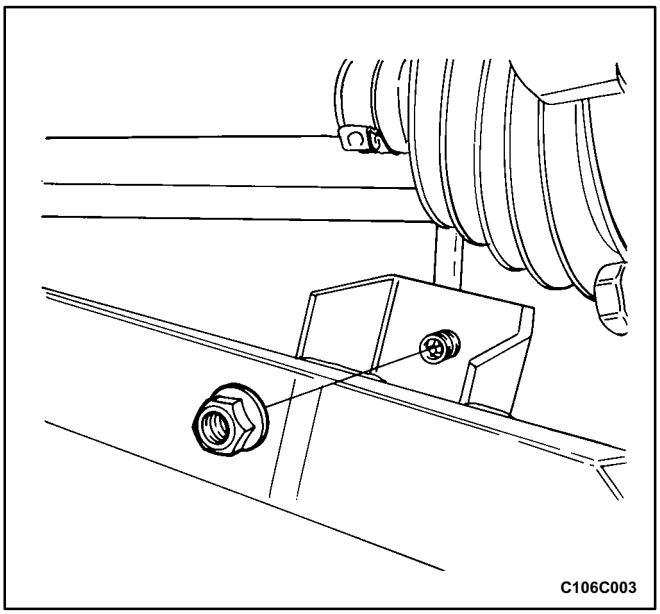

3. Remove the stabilizer link to control arm nut.
4. Remove the stabilizer link.

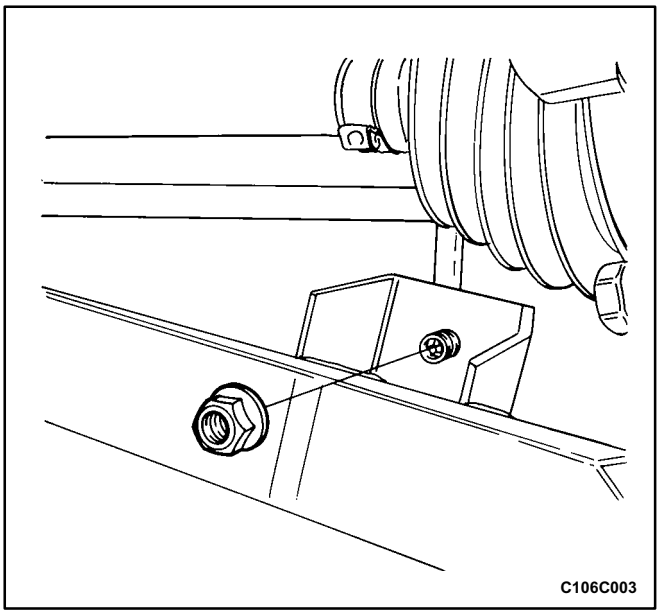

Installation Procedure

Important: The weight of the vehicle must be supported by the control arms before the stabilizer link to control arm nuts or the stabilizer shaft to stabilizer link nuts are tightened. This can be done by lowering the vehicle onto jack stands under the control arms.

1. Install the stabilizer link.
2. Install the stabilizer link to control arm nut.

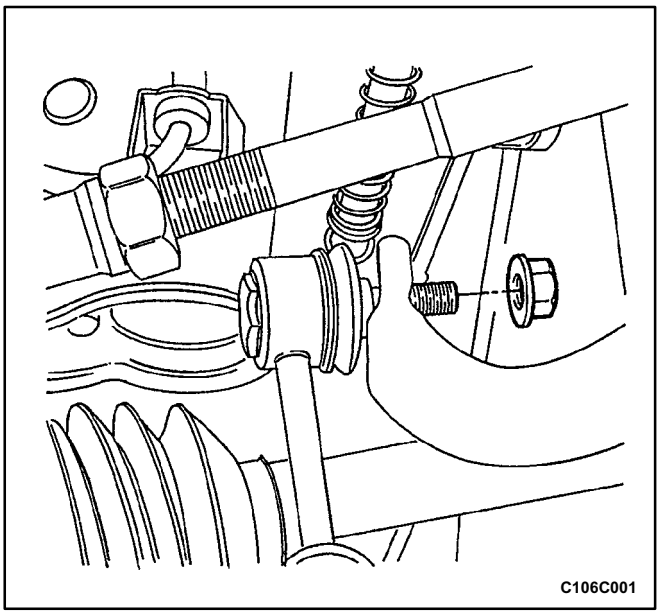

3. Install the stabilizer to stabilizer link nut.
4. Lower the vehicle so the control arms are supported by jack stands.

   ### Tighten

   Tighten the stabilizer to stabilizer link nut to 45 N•m (33 lb•ft).

   Tighten the stabilizer link to control arm nut to 45 N•m (33 lb•ft).
5. Remove the jack stands and lower the vehicle.

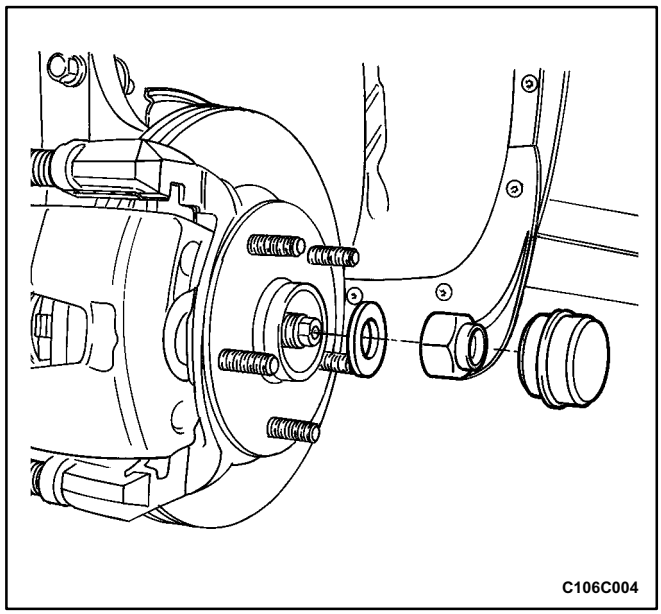

KNUCKLE ASSEMBLY

Tools Required

KM-333 Ball Joint Remover

Removal Procedure

1. Raise and suitably support the vehicle.
2. Remove the wheel. Refer to *Section 2E, Tires and Wheels*.
3. Remove the dust cap the caulking nut, and the washer from the axle shaft.
4. Remove the brake caliper from the rotor and the brake line from the strut assembly. Support the caliper so it does not hang from the hydraulic brake hose. Refer to *Section 4D, Front Disc Brakes*.
5. Remove the outer tie rod from the knuckle assembly. Refer to *Section 6C, Power Steering Gear*.
6. On vehicles equipped with the antilock braking system (ABS), disconnect the ABS speed sensor electrical connection from the knuckle. Refer to *Section 4F, Antilock Brake System and Traction Control System*.

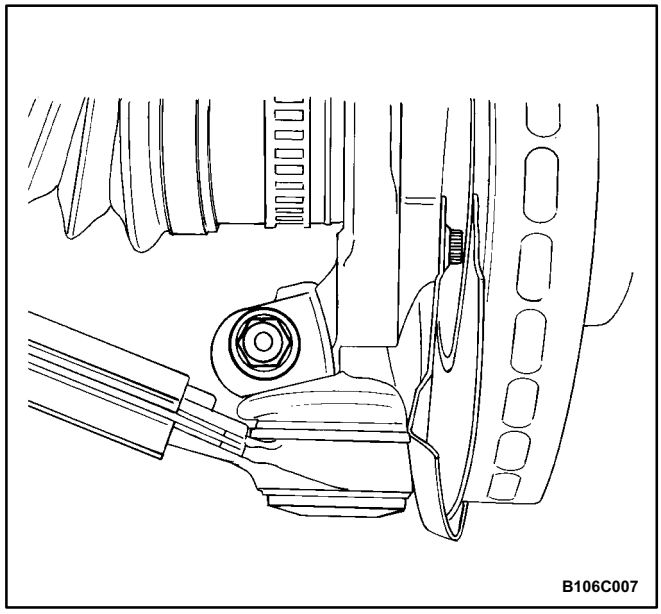

7. Remove the ball joint pinch bolt and the nut.

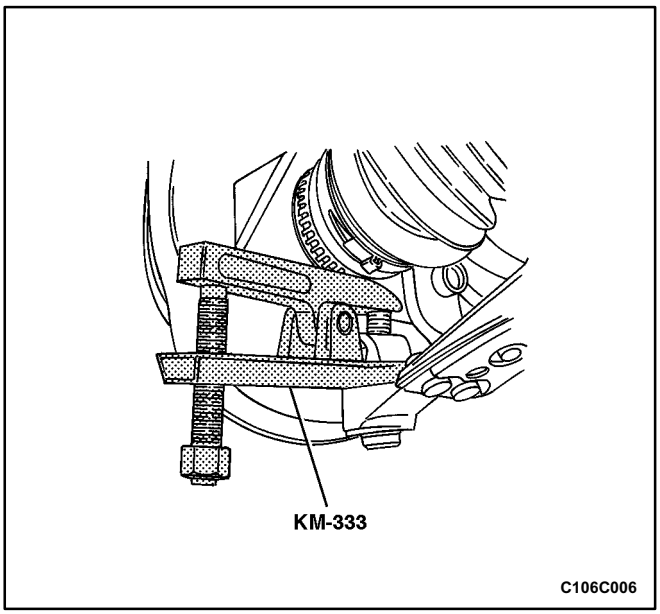

8. Separate the knuckle from the ball joint using the ball joint remover KM-333.

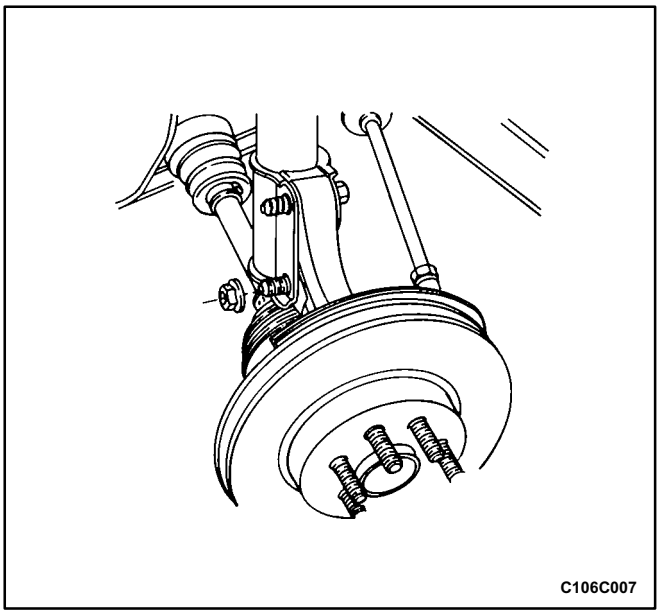

9. Remove the nuts from the bolts that connect the knuckle assembly to the strut assembly.

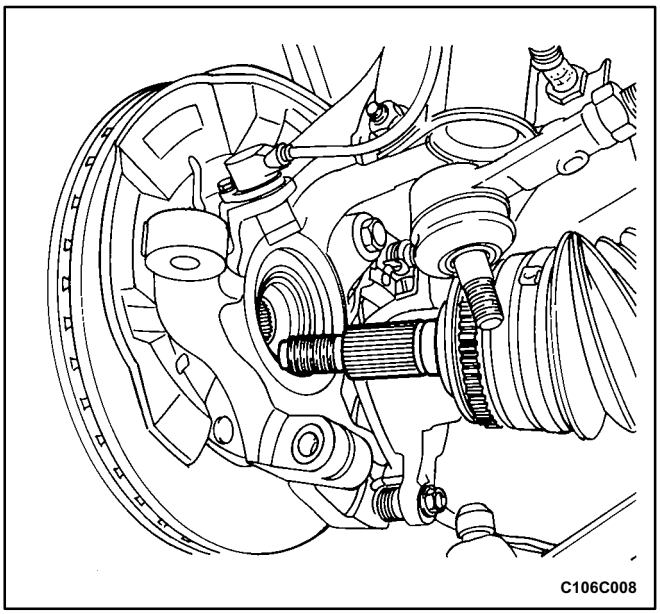

Notice: Do not overextend the axle joints. When either end of the shaft is disconnected, overextension of the joint can result in separation of internal components and possible joint failure. Use drive axle joint seal protectors whenever performing service on or near the drive axles. Failure to do so can cause internal joint or seal damage and result in possible joint failure.

10. Separate the drive axle shaft from the wheel hub.

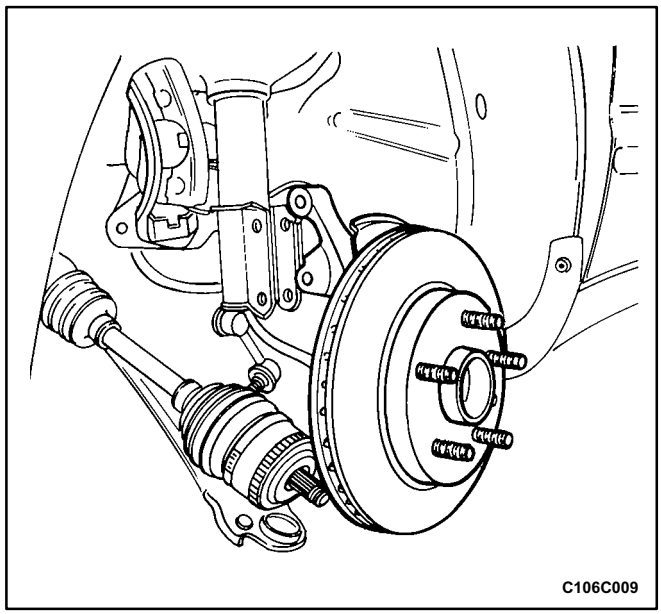

11. Support the drive axle.
12. Remove the bolts that connect the knuckle assembly to the strut assembly.
13. Remove the knuckle assembly from the vehicle.

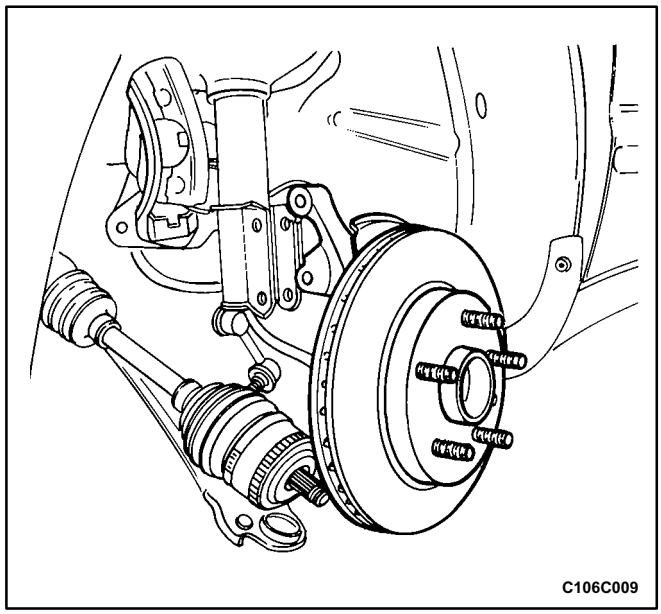

Installation Procedure

1. Install the knuckle assembly onto the vehicle.

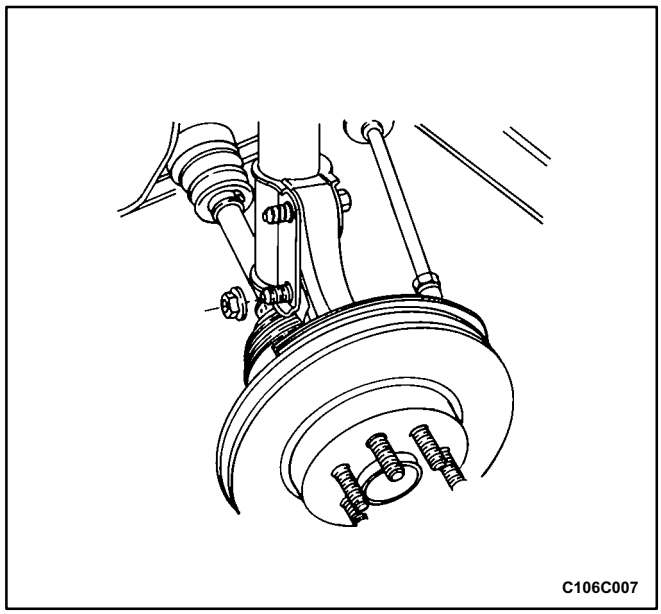

2. Install the steering knuckle to strut assembly nuts.

Tighten

Tighten the steering knuckle to strut assembly nuts to 135 N•m (100 lb•).

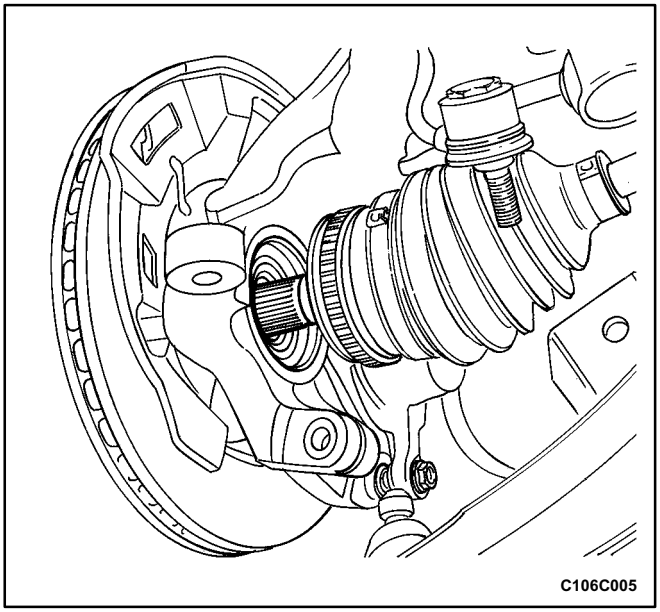

3. Connect the drive axle to the front wheel hub.

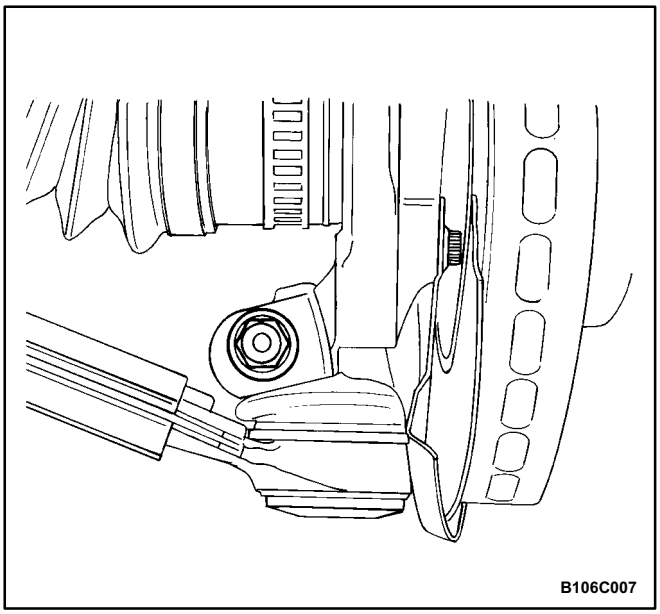

4. Connect the ball joint to the knuckle assembly.
5. Install the ball joint pinch bolt and the nut.

Tighten

Tighten the ball joint pinch bolt nut to 90 N•m (66 lb•ft).

6. Connect the ABS speed sensor electrical connection. Refer to *Section 4F, Antilock Brake System and Traction Control System*.

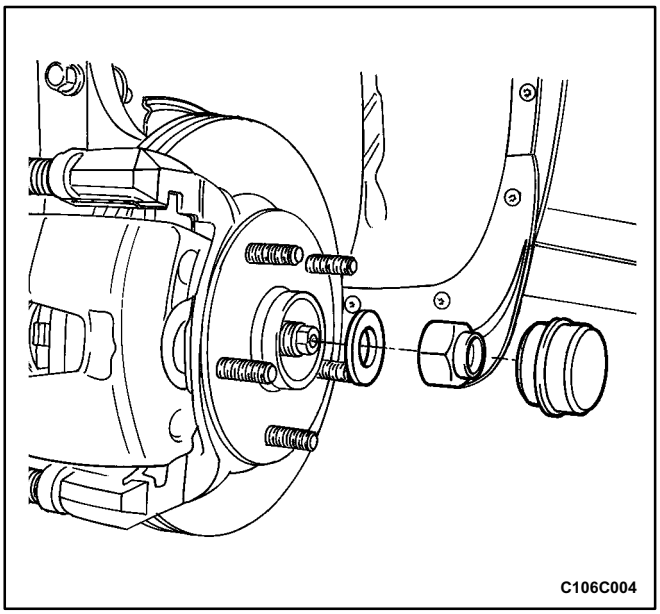

7. Connect the outer tie rod to the knuckle assembly. Refer to *Section 6C, Power Steering Gear*.
8. Install the brake caliper onto the rotor and the brake line onto the strut. Refer to *Section 4D, Front Disc Brakes.*
9. Install the washer and the caulking nut onto the axle shaft.

Tighten

Tighten the drive axle to hub caulking nut to 180 N•m (133 lb•ft). Loosen the nut, then retighten it to 50 N•m (37 lb•ft) plus 60 degrees.

10. Install the dust cap.
11. Install the wheel. Refer to *Section 2E, Tires and Wheels.*
12. Lower the vehicle.

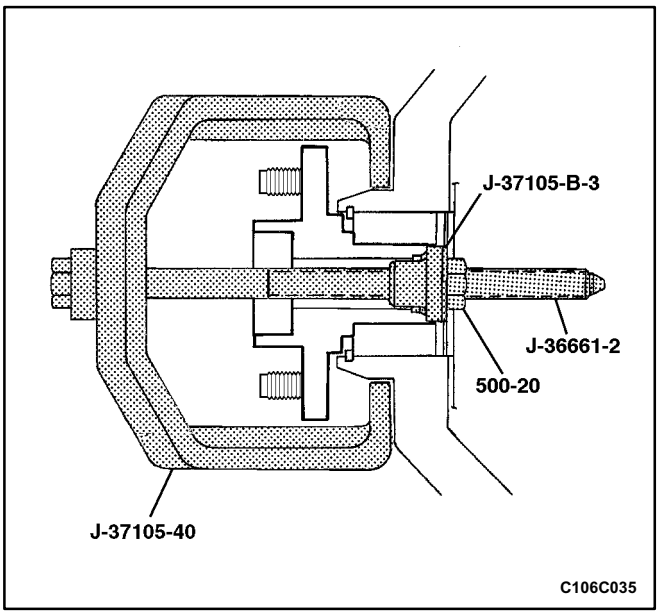

HUB AND BEARING

Tools Required

500-20 Hex Nut

J-36661-2 Forcing Screw

J-37105-40 Support Bridge

J-37105-B-2 Bearing Adapter

J-37105-B-3 Hub Adapter

Removal Procedure

1. Remove the drive axle from the front wheel hub. Refer to „Knuckle Assembly" in this section.
2. Remove the wheel hub with the support bridge J-37105-40, the hub adapter J-37105-B-3, the hex nut 500-20, and the forcing screw J-36661-2.

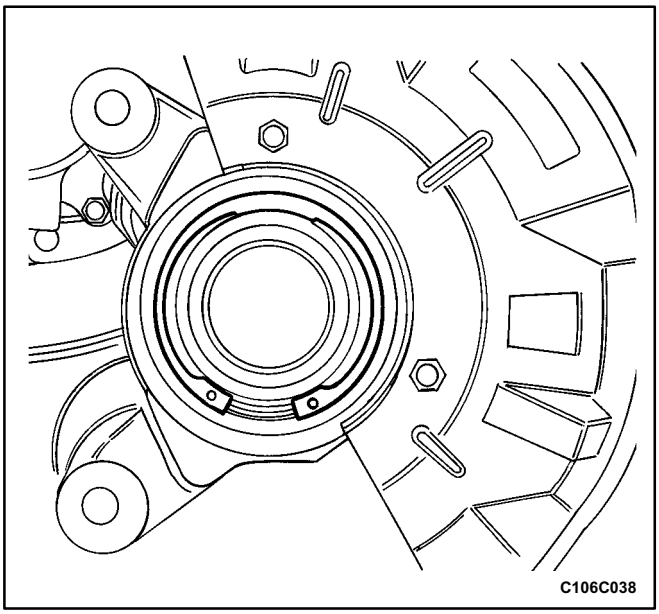

3. Remove the outer snap ring.

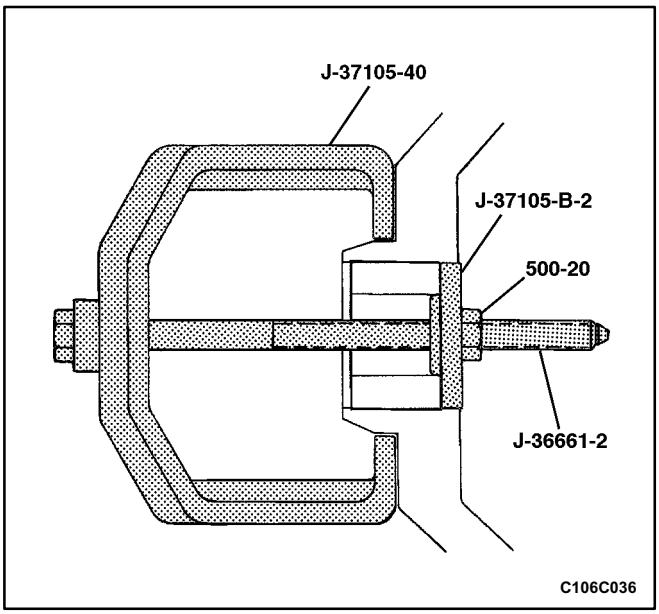

4. Remove the wheel bearing with the support bridge J-37105-40, the bearing adapter J-37105-B-2, the hex nut 500-20, and the forcing screw J-36661-2.
5. Clean the bore of the knuckle.

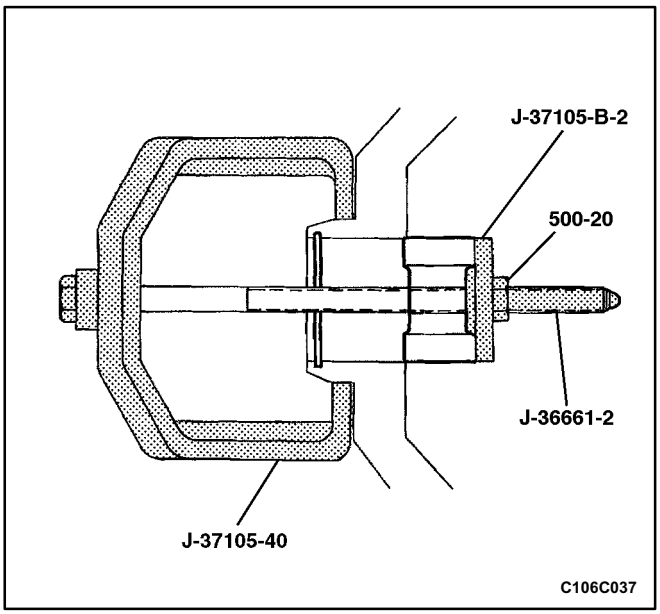

Installation Procedure

1. Install the outer snap ring and push the wheel bearing into place with the support bridge J-37105-40, the bearing adapter J-37105-B-2, the hex nut 500-20, and the forcing screw J-36661-2.

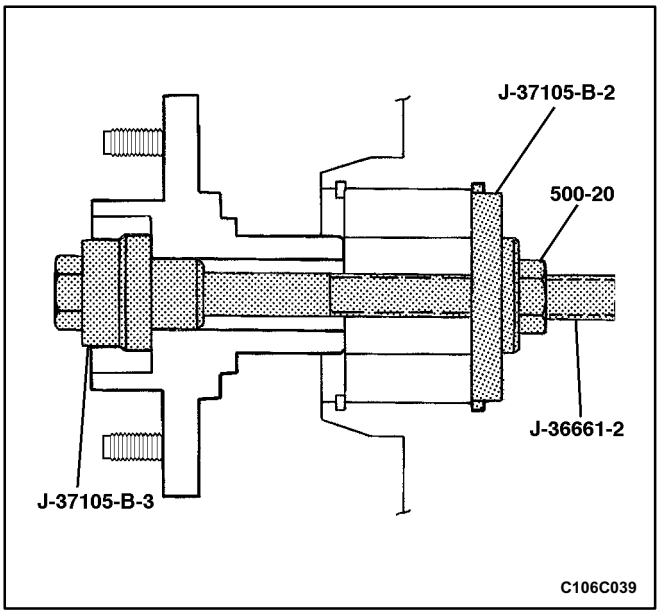

2. Push the wheel hub into place with the hub adapter J-37105-B-3, the bearing adapter J-37105-B-2, the hex nut 500-20, and the forcing screw J-36661-2.
3. Install the drive axle into the front wheel hub. Refer to „Knuckle Assembly" in this section.

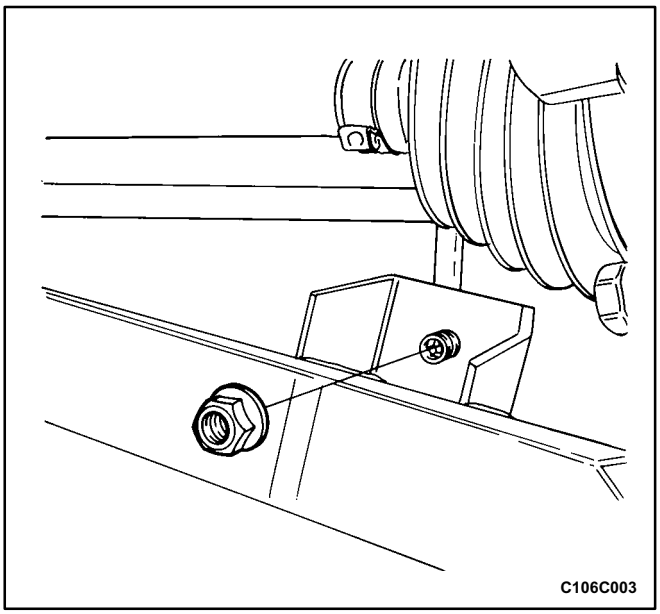

CONTROL ARM

Tools Required

KM-333 Ball Joint Remover

Removal Procedure

1. Raise and suitably support the vehicle. Let the control arms hang free.
2. Remove the wheel. Refer to *Section 2E, Tires and Wheels*.
3. Remove the stabilizer link-to-control arm nut and disconnect the stabilizer link from the control arm.

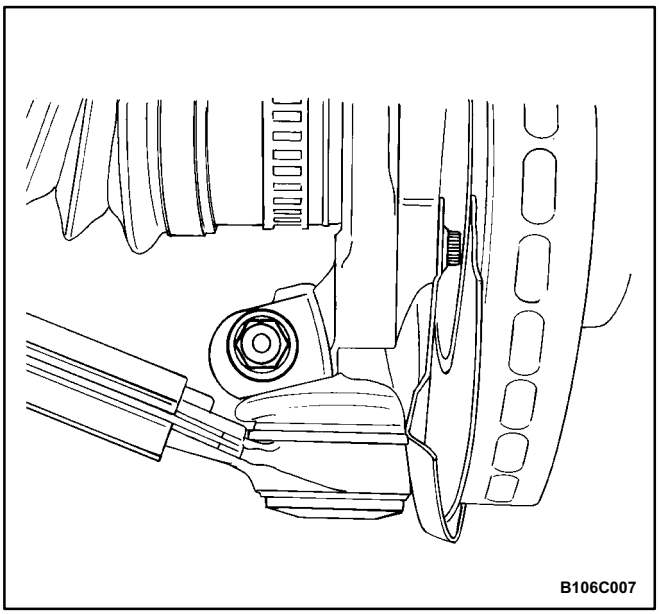

4. Remove the pinch bolt and the nut from the ball joint.

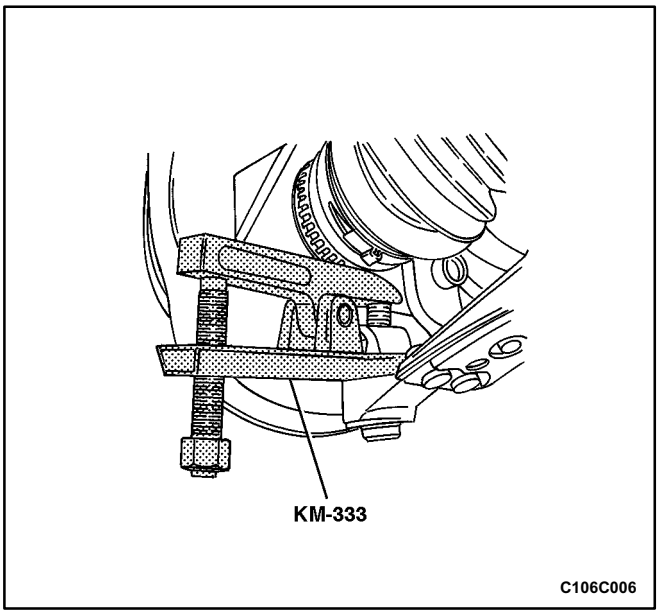

5. Disconnect the ball joint from the knuckle assembly using the ball joint remover KM-333.

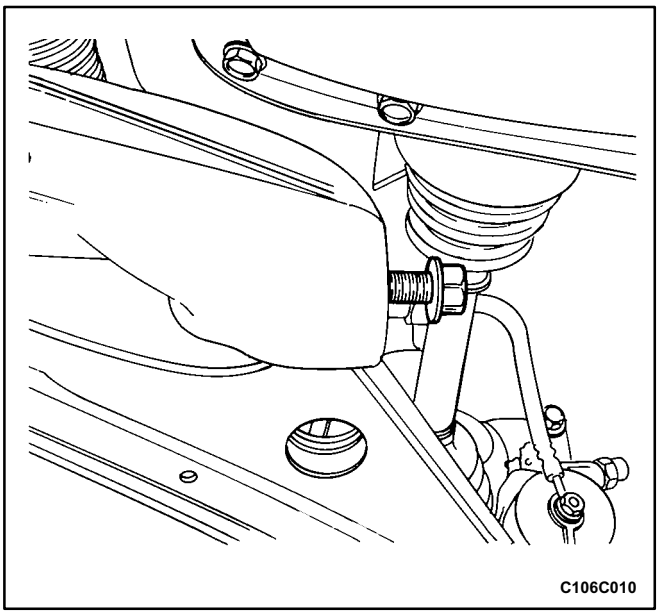

6. Remove the control arm to crossmember nut and the bolt.

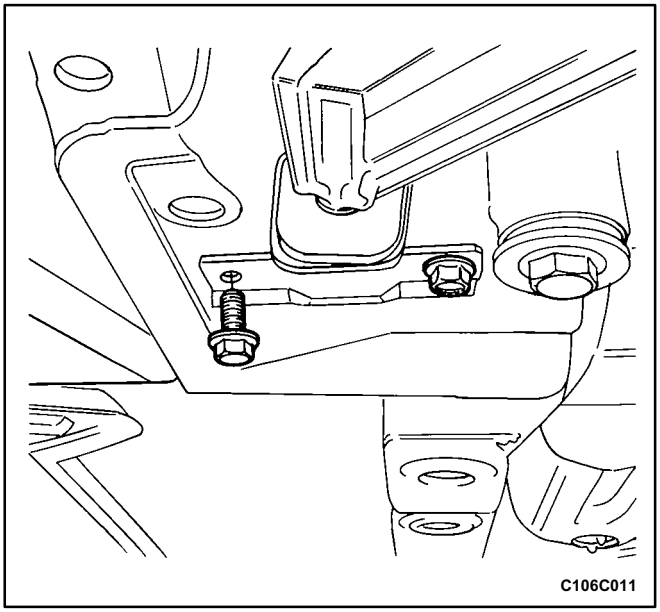

7. Remove the control arm rear bushing clamp bolts and clamp.
8. Remove the control arm from the vehicle.

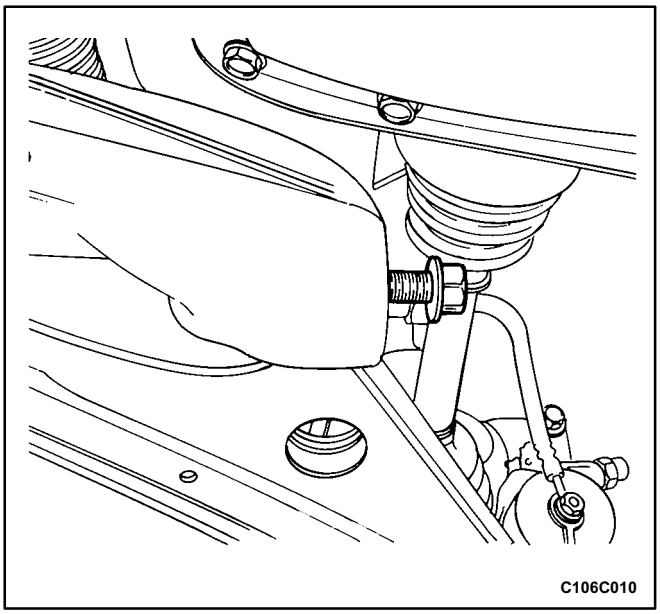

Installation Procedure

Important: The weight of the vehicle must be supported by the control arms before the control armtocrossmember and the control arm rear bushing clamp bolts are tightened. This can be done by lowering the vehicle onto jack stands under the control arms after the control arms have been installed.

1. Install the control arm.
2. Install the control arm to crossmember bolt and nut. Do not tighten the bolt.

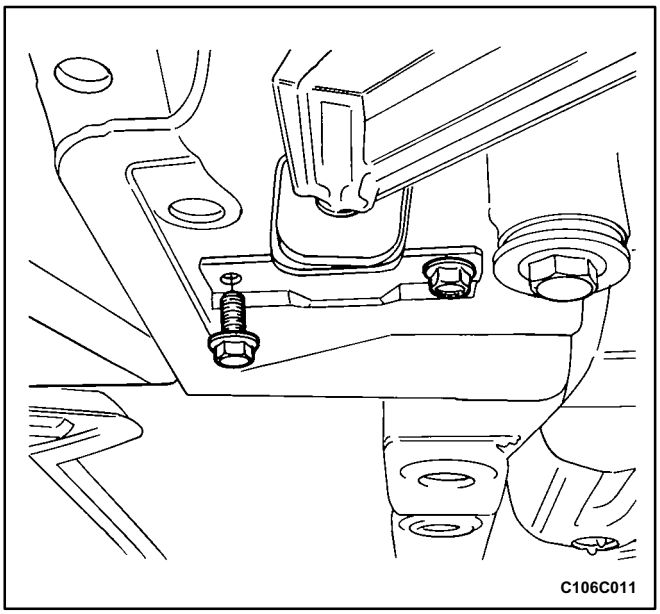

3. Install the control arm rear bushing clamp and bolts. Do not tighten.

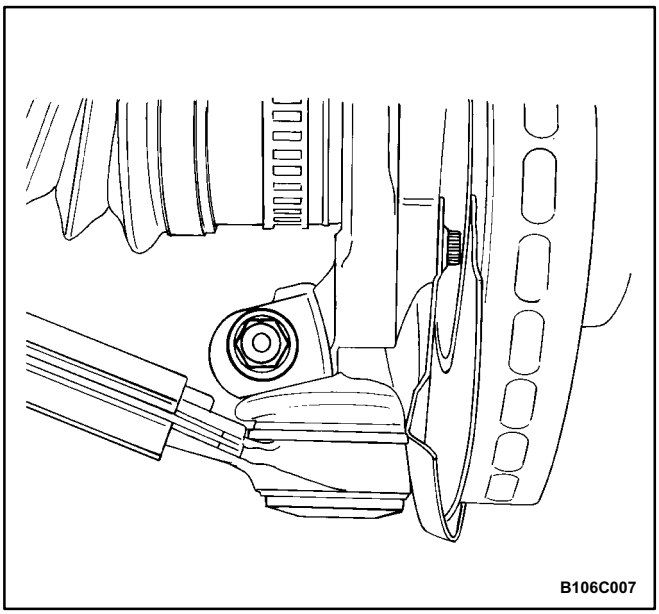

4. Connect the ball joint to the steering knuckle and install the ball joint pinch bolt and the nut.

Tighten

Tighten the ball joint pinch bolt nut to 90 N•m (66 lb•ft).

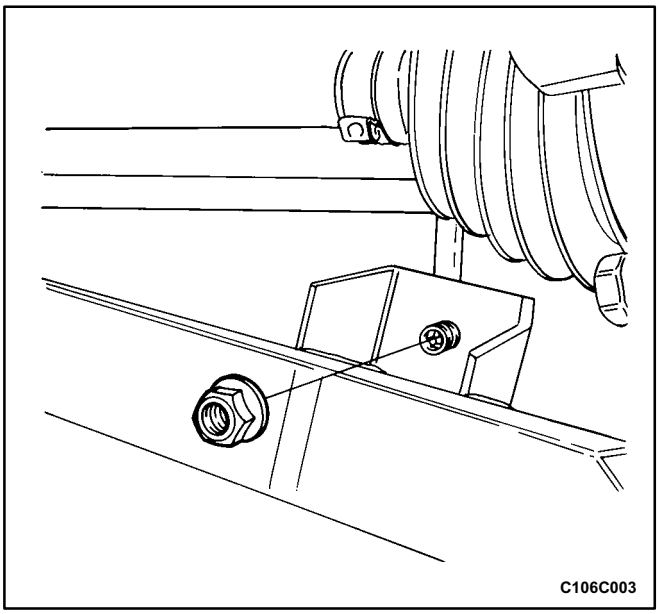

5. Connect the stabilizer link to the control arm and install the stabilizer link to control arm nut.
6. Lower the vehicle so the control arms are supported by jack stands.

Tighten

Tighten the control arm rear bushing clamp bolts to 75 N•m (55 lb•ft).

Tighten the control arm front bushing nut to 140 N•m (103 lb•ft).

Tighten the stabilizer link to control arm nut to 45 N•m (33 lb•ft).

7. Raise the vehicle and install the wheel. Refer to *Section 2E, Tires and Wheels*.
8. Remove the jack stands and lower the vehicle.

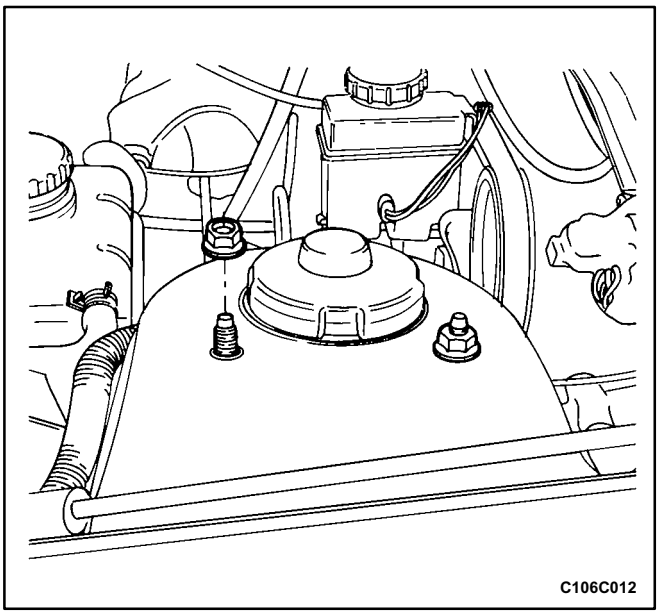

STRUT ASSEMBLY

Removal Procedure

1. Remove the nuts that secure the strut assembly to the body of the vehicle.
2. Raise and suitably support the vehicle.
3. Remove the wheel. Refer to *Section 2E, Tires and Wheels*.
4. On vehicles equipped with an antilock braking system (ABS), disconnect the ABS sensor line from the strut assembly. Refer to *Section 4F, Antilock Brake System and Traction Control System.*
5. Remove the brake line from the securing bracket on the strut assembly. Refer to *Section 4E, Rear Brakes*.

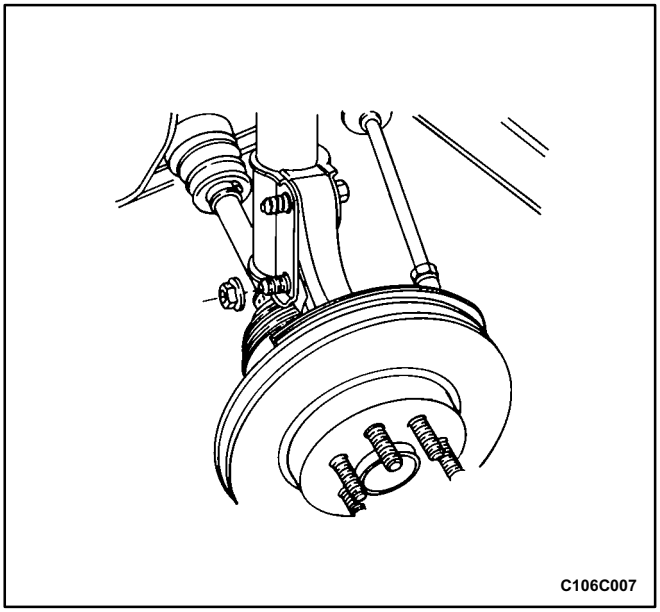

6. Disconnect the steering knuckle by removing the steering knuckle to strut assembly nuts and the bolts.

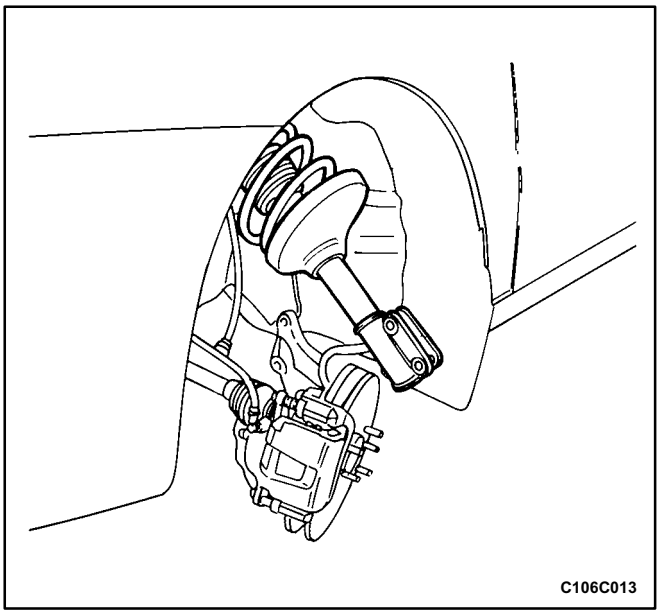

7. Remove the strut assembly.

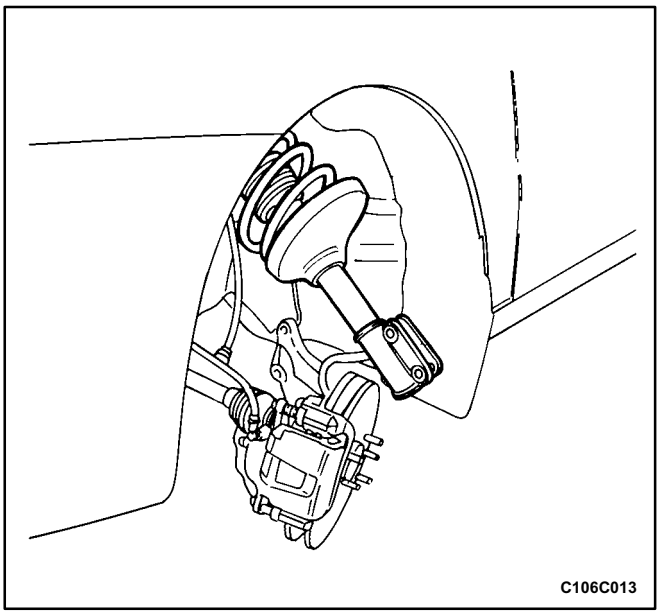

Installation Procedure

1. Install the strut assembly.

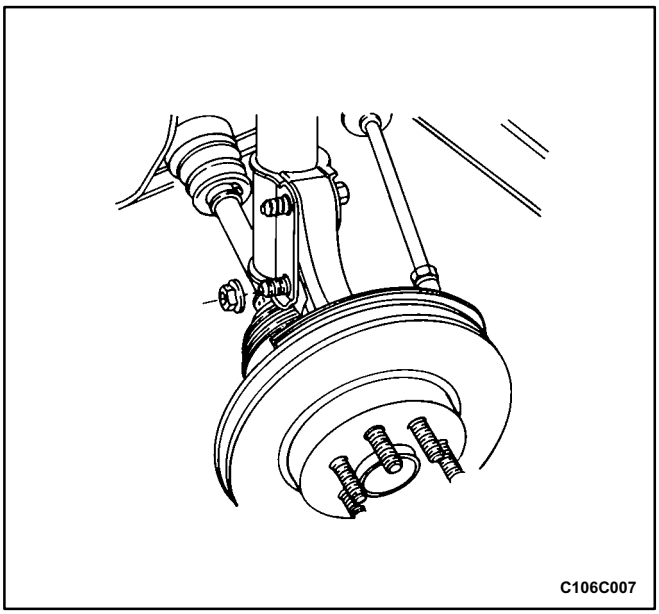

2. Connect the strut assembly to the steering knuckle by installing the steering knuckle to strut assembly nuts and the bolts.

Tighten

Tighten the steering knuckle to strut assembly nuts and the bolts to 135 N•m (100 lb•ft).

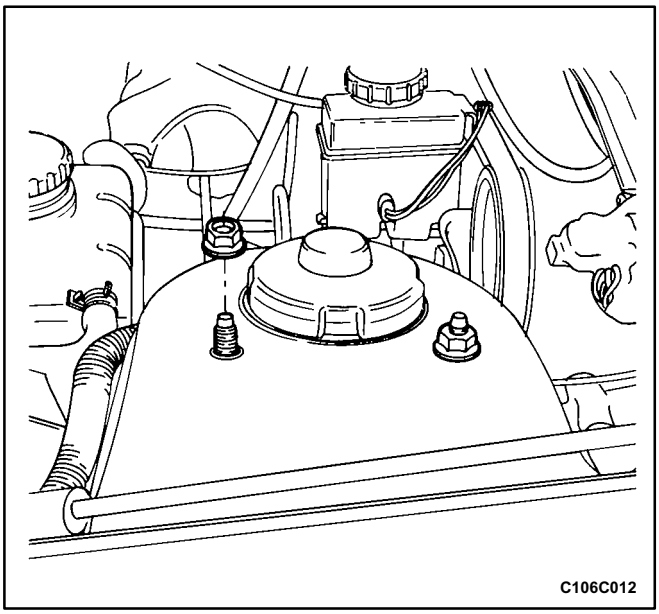

3. Install the brake line to the securing bracket on the strut assembly. Refer to *Section 4E, Rear Brakes*.
4. On vehicles equipped with the ABS, connect the ABS sensor line to the strut assembly. Refer to *Section 4F, Antilock Brake System and Traction Control System*.
5. Install the wheel. Refer to *Section 2E, Tires and Wheels*.
6. Lower the vehicle.
7. Install the nuts securing the strut assembly to the body of the vehicle.

Tighten

Tighten the strut assembly to body nuts to 45 N•m (33 lb•ft).

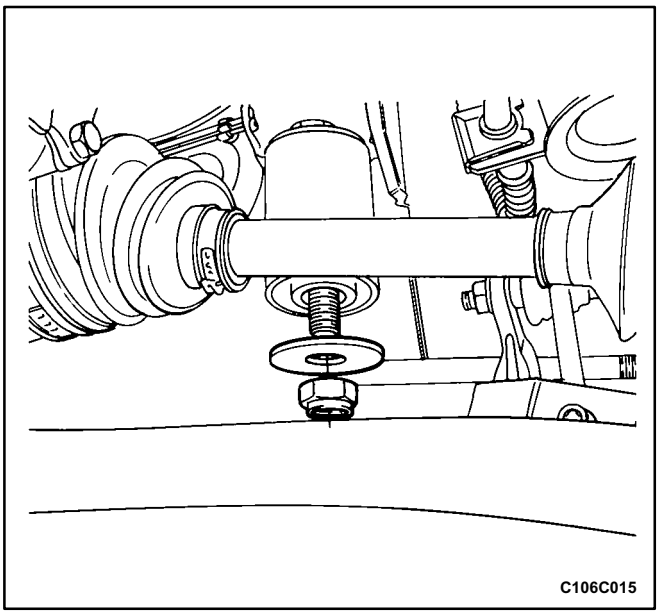

CROSSMEMBER ASSEMBLY

Removal Procedure

1. Raise and suitably support the vehicle.
2. Remove the wheels. Refer to *Section 2E, Tires and Wheels*.
3. Remove the exhaust pipe forward of the catalytic converter. Refer to *Section 1G, Engine Exhaust*.
4. Remove the center member. Refer to *Section 9N, Frame and Underbody*.
5. Disconnect the control arms from the steering knuckle. Refer to „Control Arm” in this section.
6. Disconnect the power steering gear. Refer to *Section 6C, Power Steering Gear*.
7. Remove the crossmember to body front nuts and washers.

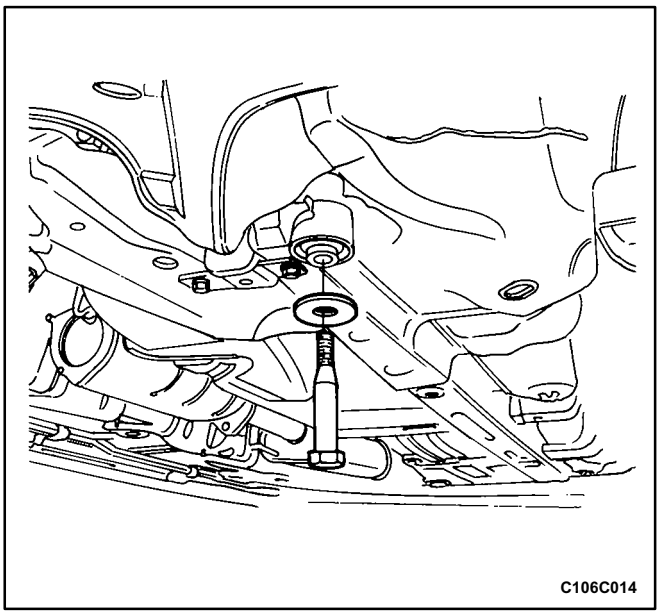

Caution: Two technicians or jack stands must hold the front crossmember assembly during removal of the front attachment bolts. Failure to support the front crossmember properly can result in personal injury.

8. Support the crossmember and remove the crossmember to body rear bolts.
9. Remove the crossmember assembly from the vehicle.

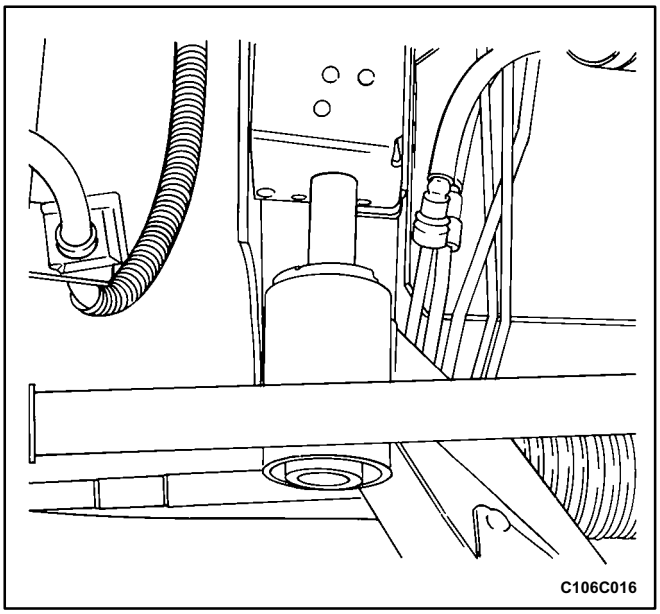

Installation Procedure

1. Raise the crossmember and align the front attachment points with the body posts of the vehicle. Install the crossmember assembly.

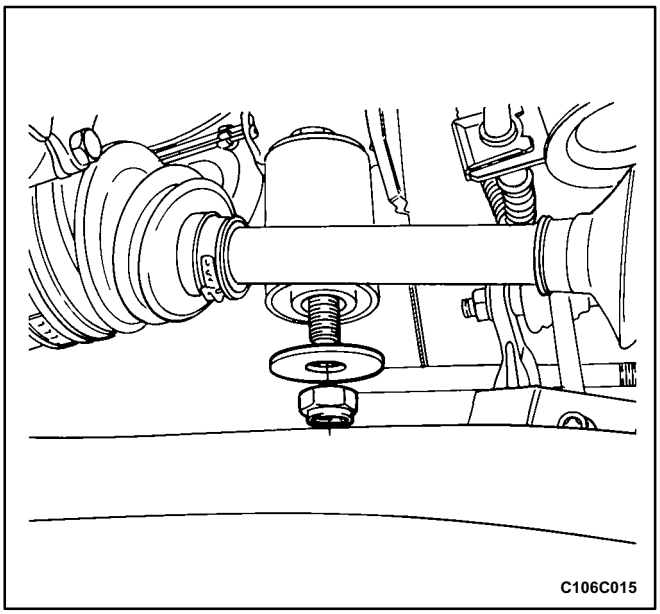

2. Install the crossmember to body front nuts and washers.

Tighten

Tighten the crossmember to body front nuts to 145 N•m (107 lb•ft).

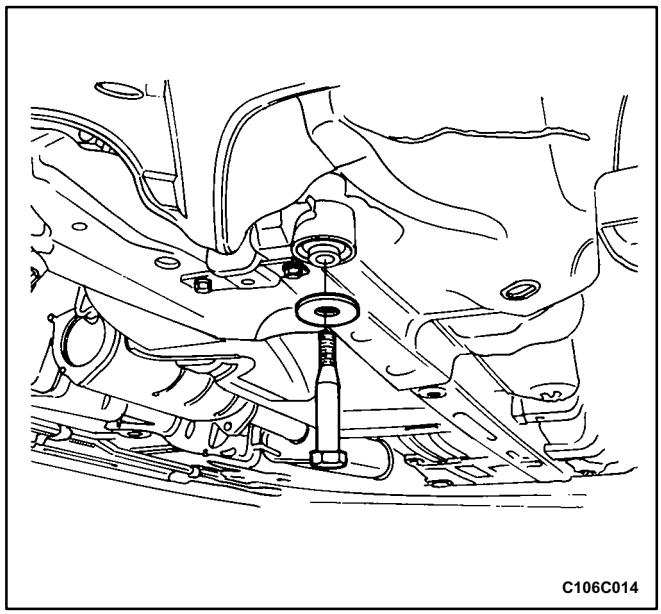

3. Install the crossmember to body rear bolts.

   Tighten

   Tighten the crossmember to body rear bolts to 145 N•m (107 lb•ft).
4. Connect the power steering gear. Refer to *Section 6C, Power Steering Gear*.
5. Connect the control arms to the steering knuckle. Refer to „Control Arm” in this section.
6. Install the center member. Refer to *Section 9N, Frame and Underbody*.
7. Install the exhaust pipe into the vehicle. Refer to *Section 1G, Engine Exhaust*.
8. Install the wheels. Refer to *Section 2E, Tires and Wheels*.
9. Lower the vehicle.

UNIT REPAIR

BALL JOINT

Disassembly Procedure

1. Remove the control arm. Refer to „Control Arm” in this section.
2. Drill off the heads of the three rivets with a 12 mm (0.47 inch) drill bit.
3. Punch out the rivets with a drift.

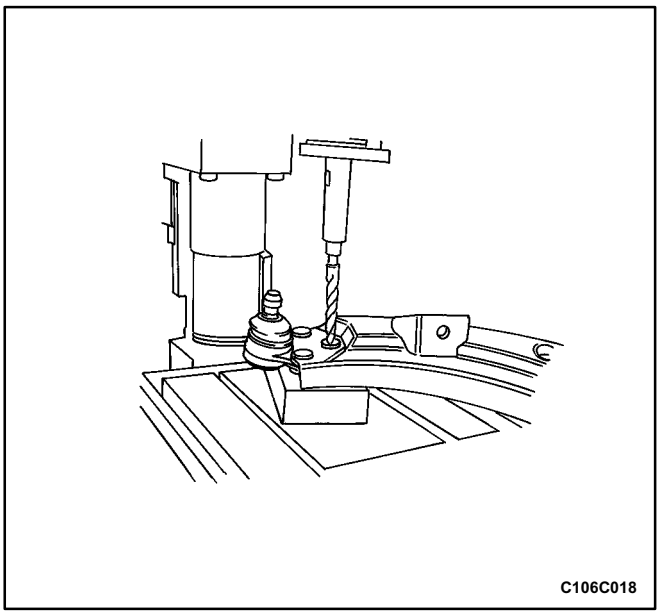

Assembly Procedure

1. Connect the ball joint to the control arm by inserting three ball joint bolts from below the control arm.

   Tighten

   Tighten the ball joint to control arm nuts to 110 N•m (81 lb•ft).
2. Install the control arm. Refer to „Control Arm” in this section.

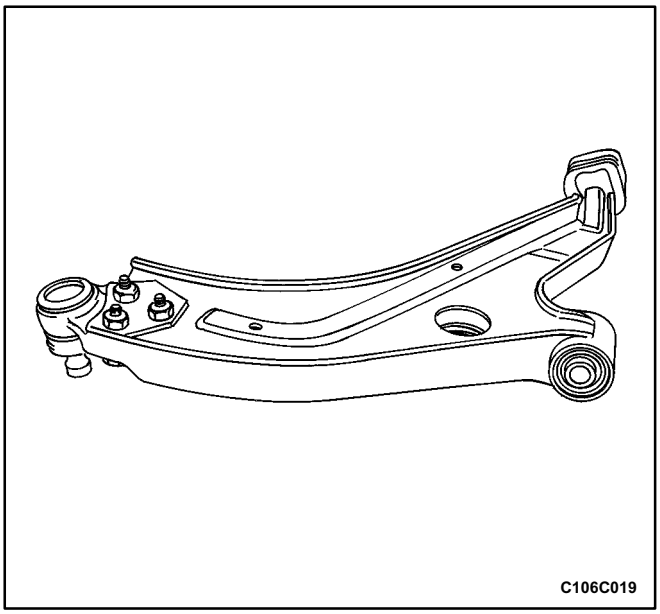

CONTROL ARM BUSHINGS

Tools Required

KM-508-A Remover/Installer

KM-307-B Removal Plate

Disassembly Procedure

1. Remove the control arm. Refer to „Control Arm” in this section.
2. Remove the control arm rear bushing using a press, the removal plate KM-307-B, and a drift.

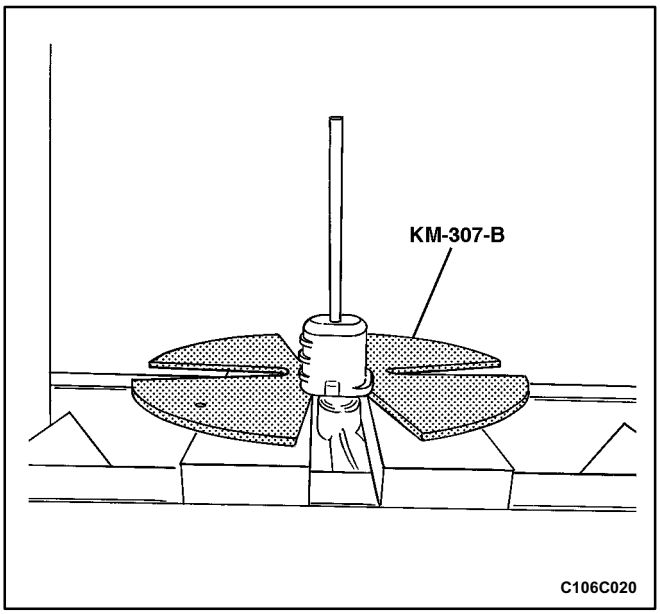

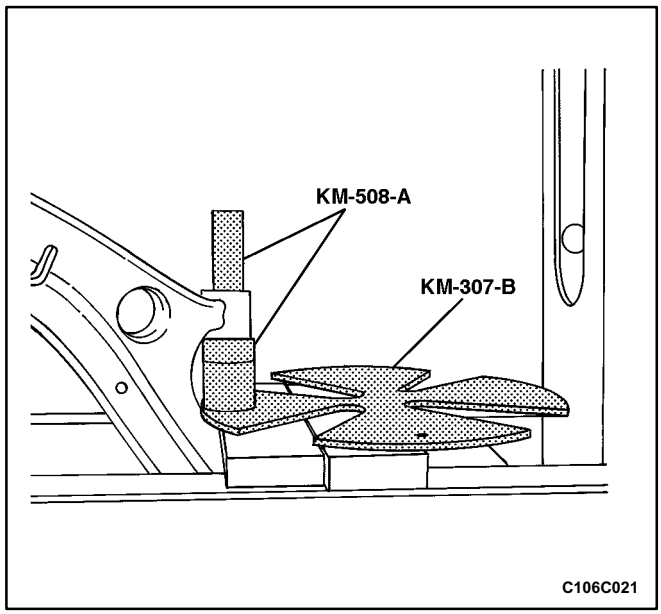

3. Remove the control arm front bushing using a press, the remover/installer KM-508-A, and the removal plate KM-307-B.

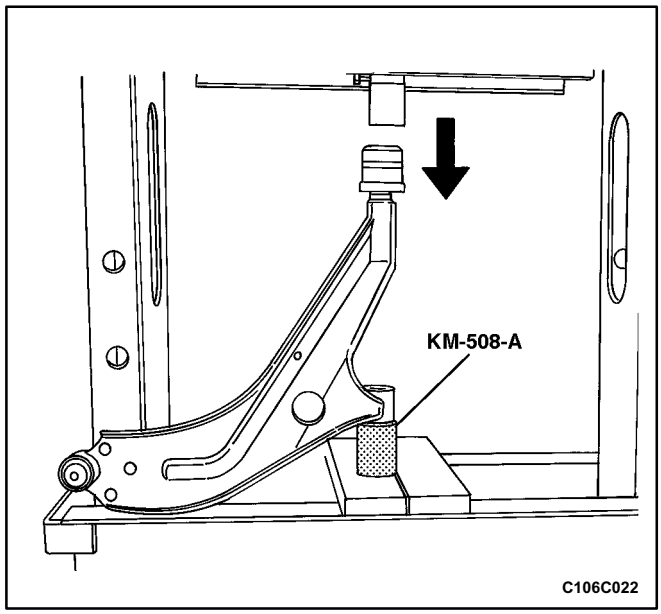

Assembly Procedure

1. Coat the control arm rear shaft with a multipurpose lubricant. Refer to *Section 1, General Information*.
2. Press the control arm rear bushing onto the shaft. Use the remover/installer KM-508-A to support the control arm.

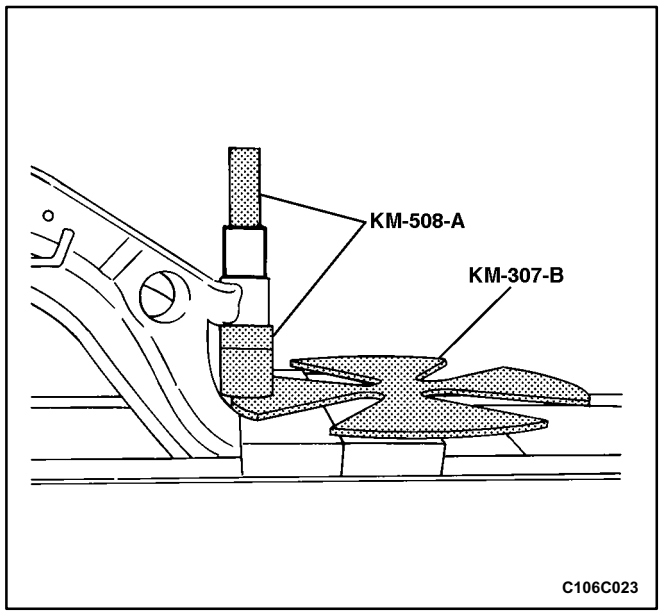

3. Coat the outside of the control arm front bushing and the inside of the control arm with a multipurpose lubricant. Refer to *Section 1, General Information*.
4. Press the control arm front bushing into the control arm using a press, the remover/installer KM-508-A and the removal plate KM-307-B. Center the bushing.
5. Install the control arm. Refer to „Control Arm” in this section.

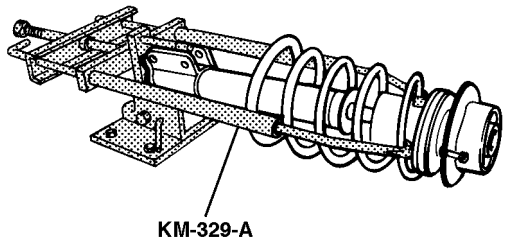

B106C024

FRONT STRUT ASSEMBLY

Tools Required

KM-329-A Spring Compressor

DV-005 Front Strut Mount Nut Wrench

Disassembly Procedure

1. Remove the strut assembly. Refer to „Strut Assembly" in this section.
2. Fasten the strut assembly to the spring compressor KM-329-A. Make sure the hooks are seated on the strut spring properly.

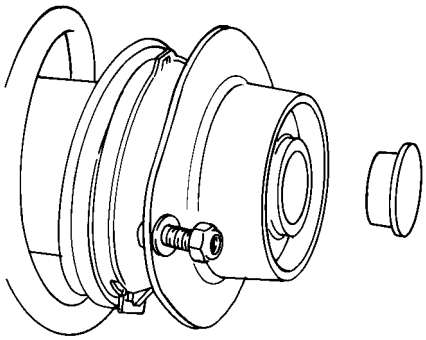

B106C025

3. Compress the front spring with the spring compressor KM-329-A.
4. Remove the dust cover from the bearing assembly.

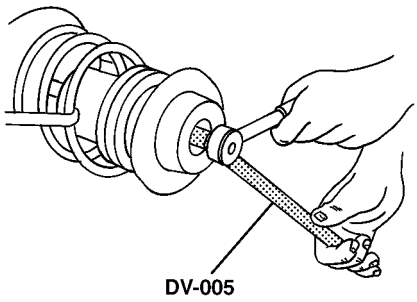

C106C024

5. Use an open end wrench to hold the threaded piston rod while removing the piston rod nut with the front strut mount nut wrench DV-005.

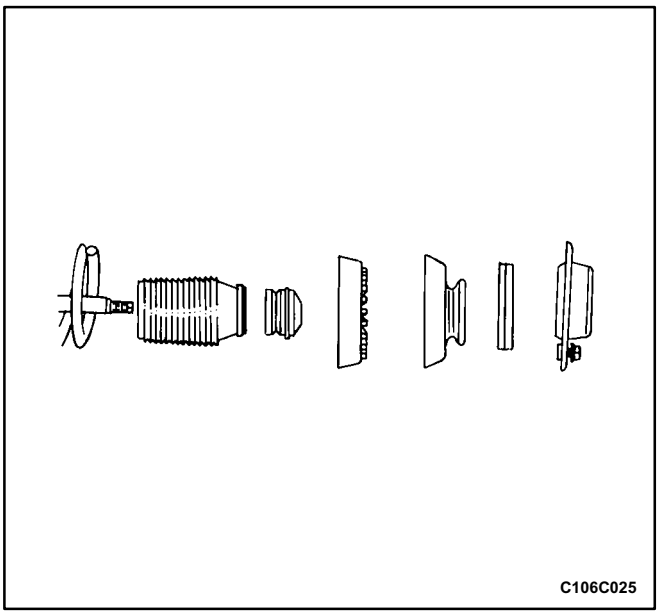

Important: Record the position of the front spring seat relative to the strut assembly to knuckle bracket. Place the front spring locator back in the same position during assembly.

6. Remove the upper strut mount, the mount bearing, the upper spring seat, the upper spring insulator, the hollow bumper and the piston rod boot.

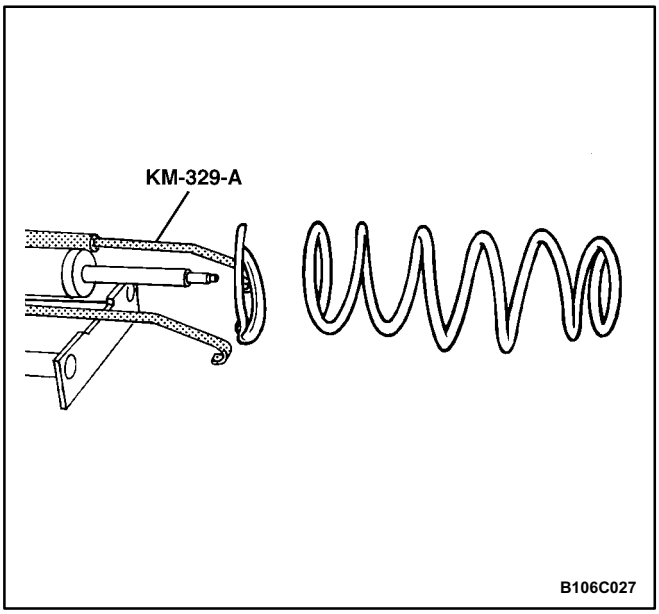

7. Release the spring.
8. Remove the spring and the lower spring insulator.

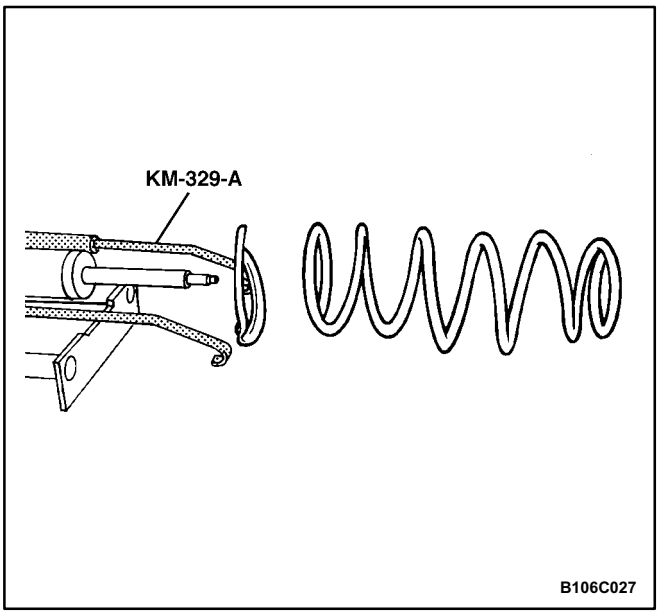

Assembly Procedure

1. Install the lower spring insulator and the spring.
2. Compress the spring using the spring compressor KM-329-A.

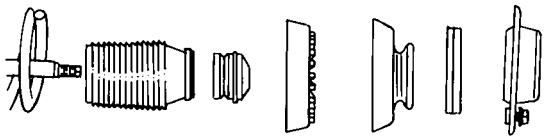

C106C025

3. Install the piston rod boot, the hollow bumper, the upper spring insulator, the upper spring seat, the upper strut mount, and the mount bearing. Be sure the front spring seat is positioned correctly.

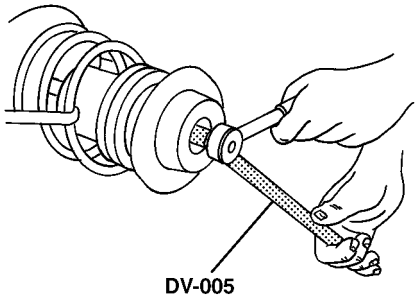

C106C024

4. Install the piston rod nut with the front strut mount nut wrench DV-005.

Tighten

Tighten the piston rod nut to 70 N•m (52 lb•ft).

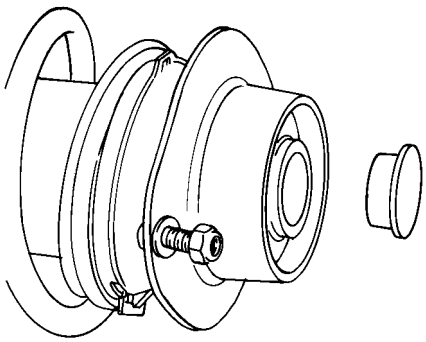

B106C025

5. Install the dust cover to the bearing assembly.
6. Release the spring compressor KM-329-A.
7. Remove the strut assembly from the spring compressor KM-329-A.
8. Install the strut assembly onto the vehicle. Refer to „Strut Assembly” in this section.

KNUCKLE

Disassembly Procedure

1. Remove the knuckle assembly from the vehicle. Refer to „Knuckle Assembly” in this section.
2. Remove the rotor. Refer to *Section 4D, Front Disc Brakes*.
3. Remove the hub and bearing assembly. Refer to „Hub and Bearing” in this section.
4. Remove the brake splash shield. Refer to *Section 4D, Front Disc Brakes.*

Assembly Procedure

1. Install the brake splash shield. Refer to *Section 4D, Front Disc Brakes.*
2. Install the hub and bearing assembly. Refer to „Hub and Bearing” in this section.
3. Install the rotor. Refer to *Section 4D, Front Disc Brakes*.
4. Install the knuckle assembly onto the vehicle. Refer to „Knuckle Assembly” in this section.

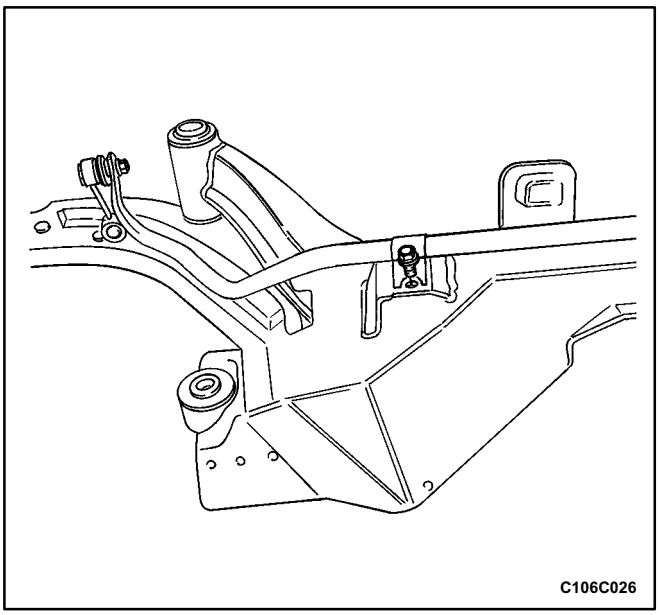

CROSSMEMBER

Disassembly Procedure

1. Remove the crossmember assembly from the vehicle. Refer to „Crossmember Assembly” in this section.
2. Remove the stabilizer clamp bolts.
3. Remove the stabilizer shaft to stabilizer link nuts.
4. Remove the stabilizer shaft clamps, insulators and stabilizer shaft from the crossmember.

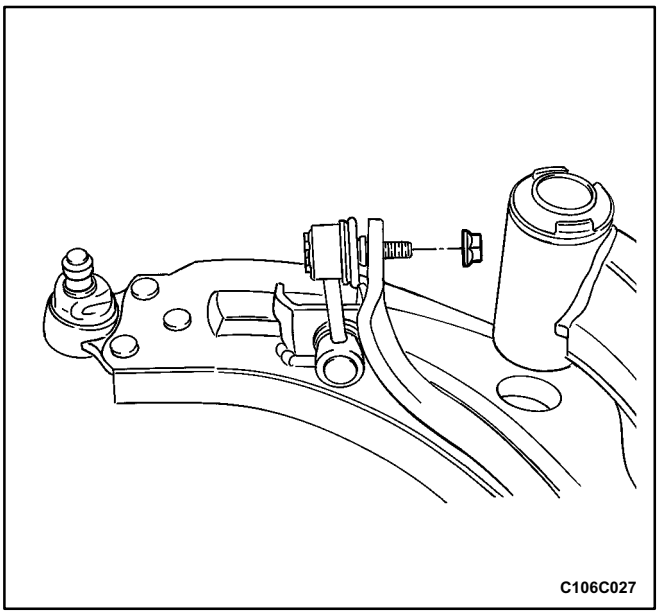

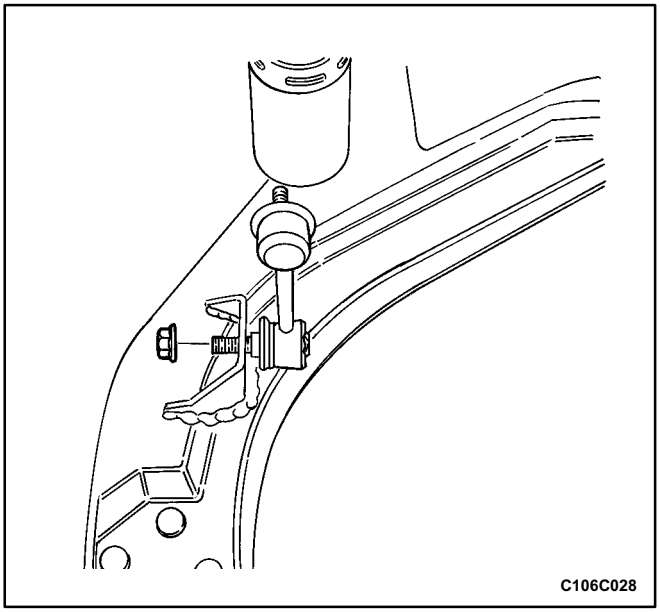

5. Remove the stabilizer link to control arm nut.
6. Remove the stabilizer link.

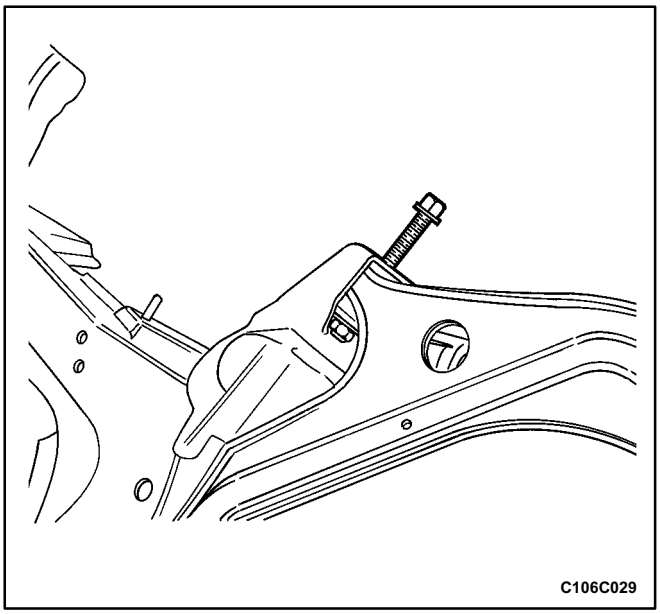

7. Remove the control arm front nuts and bolts.

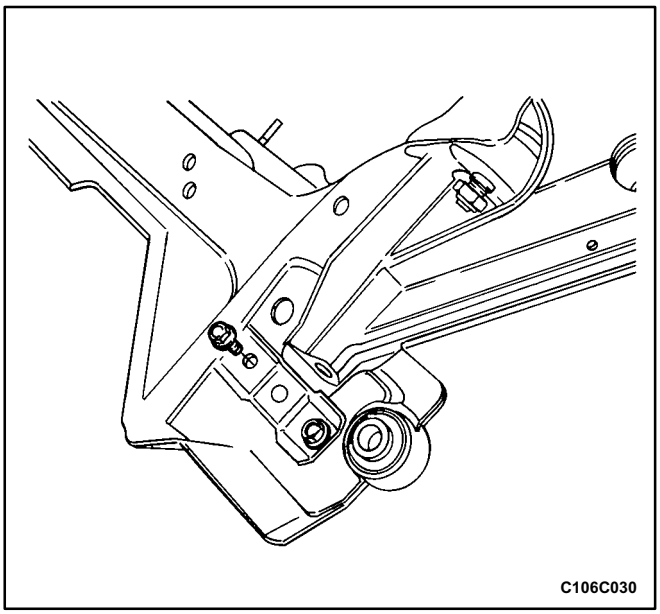

8. Remove the control arm rear bushing clamp bolts and clamps.
9. Remove the control arms.

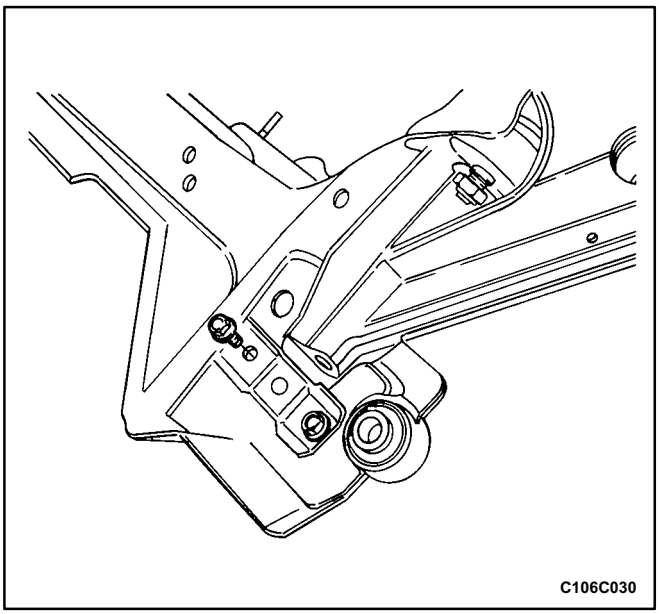

Assembly Procedure

Important: The weight of the vehicle must be supported by the control arms before the stabilizer link to control arm nut, the stabilizer shaft go stabilizer link nut and the control arm front nut and rear bolts are tightened. This can be done by lowering the vehicle onto jack stands under the control arms.

1. Install the control arms.
2. Install the control arm rear bushing clamps and clamp bolts. Do not tighten.

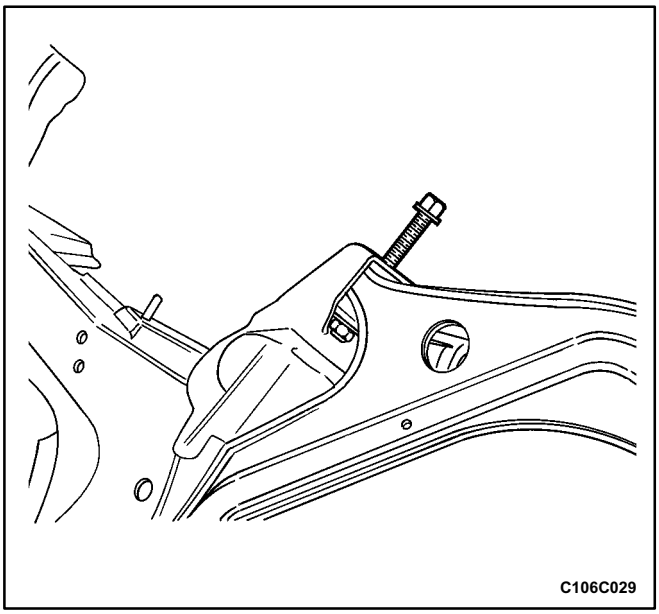

3. Install the control arm front nuts and bolts. Do not tighten.

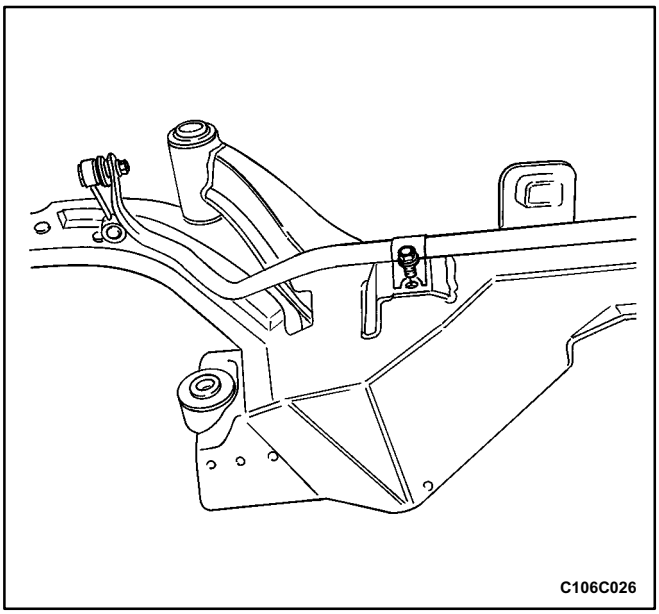

4. Install the stabilizer clamps, the stabilizer shaft, and the insulators.
5. Install the stabilizer shaft to crossmember clamp bolts.

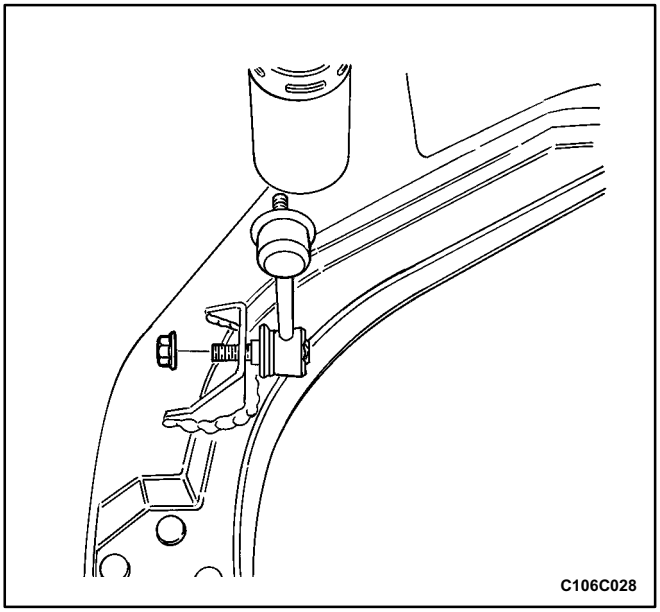

6. Install the stabilizer link.
7. Install the stabilizer link to control arm nuts. Do not tighten.

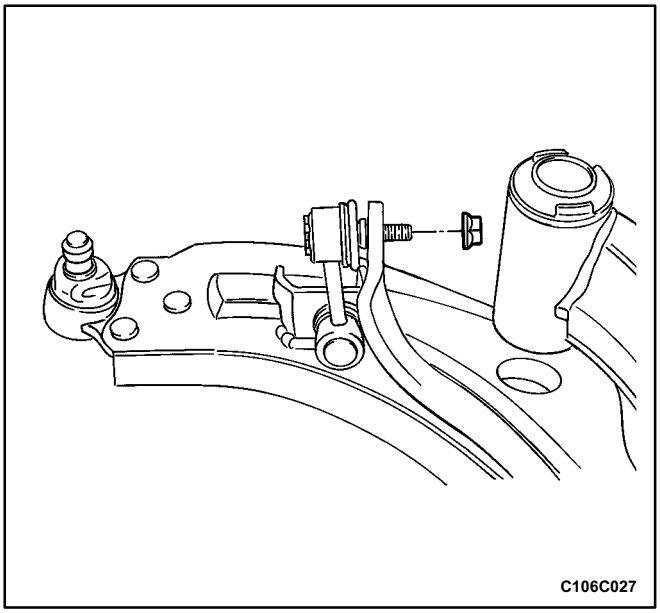

8. Install the stabilizer shaft to stabilizer link nuts. Do not tighten.

Tighten

Tighten the stabilizer shaft to crossmember clamp bolts to 37 N•m (27 lb•ft).

9. Install the crossmember assembly into the vehicle. Refer to „Crossmember Assembly" in this section.
10. Lower the vehicle so the control arms are supported by jack stands.

Tighten

Tighten the control arm rear bushing clamp bolts to 75 N•m (55 lb•ft).

Tighten the control arm front bushing nuts to 140 N•m (103 lb•ft).

Tighten the stabilizer link to control arm nuts to 45 N•m (33 lb•ft).

Tighten the stabilizer shaft to stabilizer link nuts to 45 N•m (33 lb•ft).

11. Remove the jack stands and lower the vehicle.

GENERAL DESCRIPTION AND SYSTEM OPERATION

FRONT SUSPENSION

The front suspension for this vehicle is a combination a strut assembly and a knuckle assembly. The strut assembly combines a strut dampener and spring mounted to the body of the vehicle. The upper end of the strut is isolated by a rubber mount and contains a bearing to allow the strut to turn. The knuckle is attached to the strut assembly and pivots on a ball joint bolted to the control arm. The control arms pivot from the body using rubber bushings.

The ball joint is fastened to the steering knuckle with a pinch bolt and nut, and to the lower control arm with rivets. The stabilizer bar interconnects both strut assemblies of the vehicle through the stabilizer link and is attached to the front suspension crossmember. Jounce and rebound movements affecting one wheel are partially transmitted to the opposite wheel of the vehicle to stabilize body roll.

When servicing the control arm to body attachment and the stabilizer shaft to body insulators, make sure the attaching bolts are loose until the control arms are moved to the trim height, which is curb height. Trim height is the normal position to which the control arms move when the vehicle is sitting on the ground. Refer to „General Specifications” in this section.

SECTION 2D

REAR SUSPENSION

CAUTION: Disconnect the negative battery cable before removing or installing any electrical unit or when a tool or equipment could easily come in contact with exposed electrical terminals. Disconnecting this cable will help prevent personal injury and damage to the vehicle. The ignition must also be in LOCK unless otherwise noted.

TABLE OF CONTENTS

Specifications 2D-1
General Specifications 2D-1
Fastener Tightening Specifications 2D-2
Special Tools 2D-2
Special Tools Table 2D-2
Diagnosis 2D-2
Excessive Friction Check 2D-2
Strut Dampener 2D-2
Component Locator 2D-4
Rear Suspension 2D-4
Maintenance and Repair 2D-6
On-Vehicle Service 2D-6
Strut Assembly 2D-6
Knuckle Assembly 2D-8
Stabilizer Shaft and Insulators 2D-10
Stabilizer Link 2D-12
Trailing Link and Bracket 2D-14
Parallel Links 2D-16
Crossmember 2D-19
Hub and Bearing Assembly 2D-20
Unit Repair 2D-24
Springs and Insulators 2D-23
Knuckle 2D-26
Hub and Bearing 2D-27
General Description and System Operation 2D-28
Rear Suspension 2D-28

SPECIFICATIONS

GENERAL SPECIFICATIONS

Application	Description
Lubrication	Wheel Bearing Lubricant GM P/N 1051344

FASTENER TIGHTENING SPECIFICATIONS

Application	N•m	Lb•Ft	Lb•In
Caulking Nuts	285	210	-
Crossmember to Body Bolts	110	81	-
Damper Rod to Strut Mount Nuts	80	59	-
Knuckle to Strut Assembly Nuts	120	89	-
Parallel Link to Crossmember Nuts	120	89	-
Parallel Link to Knuckle Nuts	135	100	-
Stabilizer Link to Strut Assembly Nuts	45	33	-
Stabilizer Shaft Clamp Bolts	37	27	-
Stabilizer Shaft to Stabilizer Link Nuts	45	33	-
Strut Mount to Body Nuts	45	33	-
Trailing Link Bracket to Body Bolts	90	66	-
Trailing Link to Knuckle Bolts	120	89	-
Trailing Link to Trailing Link Bracket Nuts	100	73	-

SPECIAL TOOLS

SPECIAL TOOLS TABLE

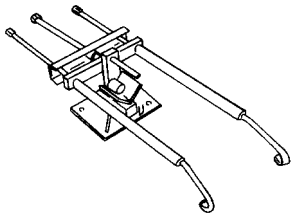 A106C031	**KM-329-A** **Spring Compressor**

DIAGNOSIS

EXCESSIVE FRICTION CHECK

Check excessive friction in the rear suspension as follows:

1. With the aid of a helper, lift up on the rear bumper and raise the vehicle as high as possible. Slowly release the bumper and allow the car to assume normal trim height.
2. Measure the distance from the floor to the center of the bumper.
3. Push down on the bumper, release slowly, and allow the car to assume normal trim height.
4. Measure the distance from the floor to the center of the bumper.

The difference between the two measurements should be less than 12.7 mm (0.50 inch). If the difference exceeds this limit, inspect the control arms for damage or wear.

STRUT DAMPENER

A strut dampener is basically a shock absorber. However, strut dampeners are easier to extend and retract by hand than are shock absorbers.

Struts Seem Weak

Checks	Action
Check the tire pressures.	Adjust the tire pressures to the specifications on the tire placard.
Check the load conditions under which the vehicle is normally driven.	Consult with the owner to confirm the owner's understanding of normal load conditions.
Check the compression and rebound effectiveness of the strut dampener.	Quickly push down and then lift up on the corner of the bumper nearest the strut dampener being tested. Compare the compression and rebound with those of a similar vehicle that has an acceptable ride quality. Replace the strut dampener, if needed.

Struts Are Noisy

Checks	Action
Check the mountings for looseness or damage.	Tighten the strut dampener. Replace the strut dampener, if needed.
Check the compression and rebound effectiveness of the strut dampener.	Quickly push down and then lift up on the corner of the bumper nearest the strut dampener being tested. Compare the compression and rebound with those of a similar vehicle that has an acceptable ride quality. Replace the strut dampener, if needed.

Leaks

Checks	Action
Check for a slight trace of fluid.	The strut dampener is OK.
Check the seal cover on the fully extended strut.	Replace the strut dampener.
Check for an excessive amount of fluid on the strut dampener.	Replace the strut dampener.

COMPONENT LOCATOR

REAR SUSPENSION

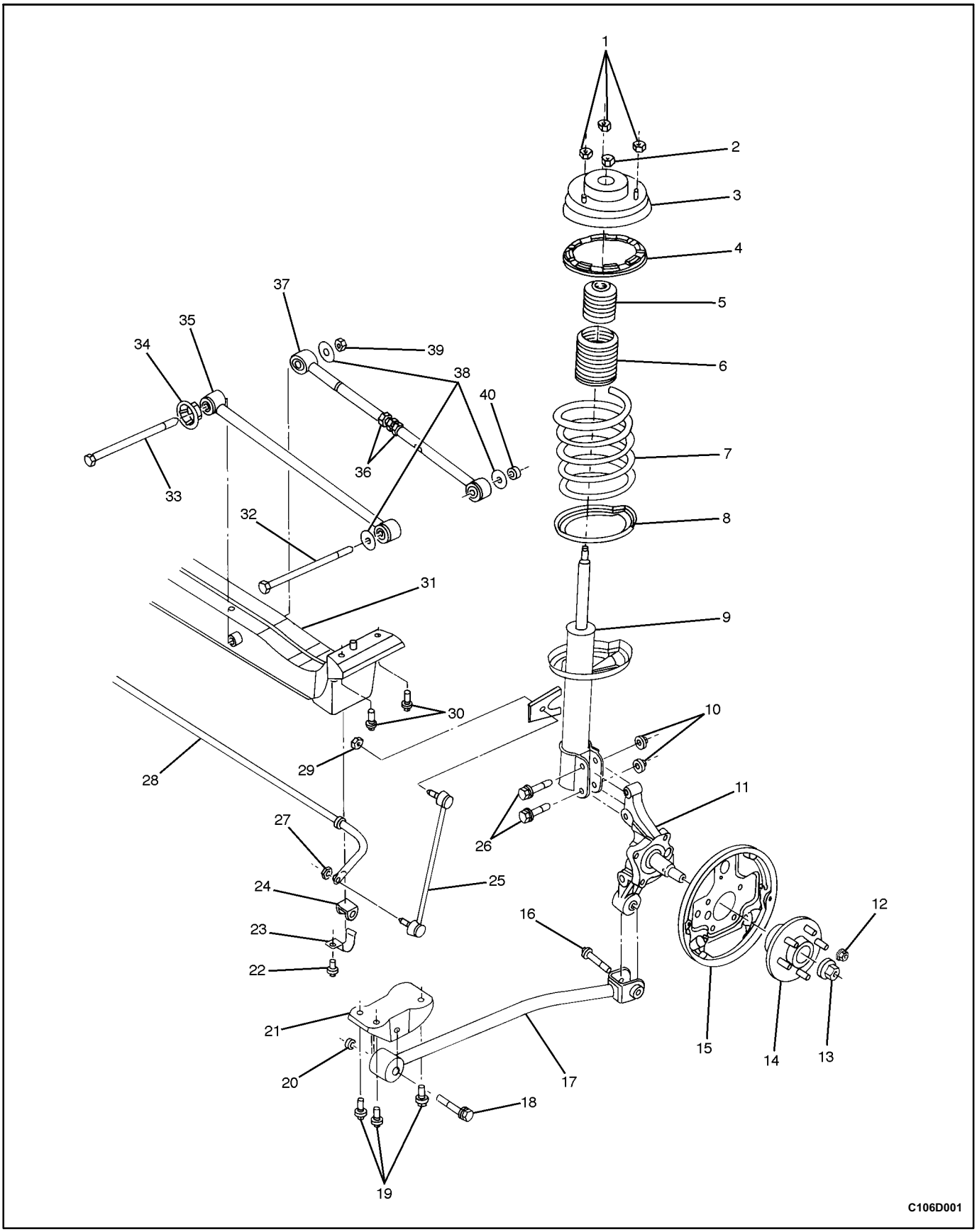

1 Strut Assembly to Body Nut
2 Strut Mount Lock Nut
3 Strut Mount
4 Rear Spring Upper Insulator
5 Hollow Bumper
6 Strut Dampener Dust Cover
7 Rear Spring
8 Rear Spring Lower Insulator
9 Strut Dampener
10 Strut Assembly to Knuckle Nut
11 Rear Knuckle
12 Wheel Nut
13 Caulking Nut
14 Hub and Bearing Assembly
15 Rear Brake Plate
16 Trailing Link to Knuckle Bolt
17 Trailing Link
18 Trailing Link to Trailing Link Bracket Bolt
19 Trailing Link Bracket to Body Bolts
20 Trailing Link to Trailing Link Bracket Nut
21 Trailing Link Bracket
22 Stabilizer Shaft Insulator Clamp Bolt
23 Stabilizer Shaft Insulator Clamp
24 Stabilizer Shaft Insulator
25 Stabilizer Link
26 Strut Assembly to Knuckle Bolts
27 Stabilizer Shaft to Stabilizer Link Nut
28 Stabilizer Shaft
29 Stabilizer Link to Strut Assembly Nut
30 Rear Crossmember to Body Bolt
31 Rear Crossmember
32 Parallel Link to Knuckle Bolt
33 Parallel Link to Crossmember Bolt
34 Parallel Link Cap
35 Front Parallel Link
36 Rear Toe Adjusting Screw Jam Nut
37 Rear Parallel Link
38 Washer
39 Parallel Link to Crossmember Nut
40 Parallel Link to Knuckle Nut

MAINTENANCE AND REPAIR

ON-VEHICLE SERVICE

STRUT ASSEMBLY

Removal Procedure

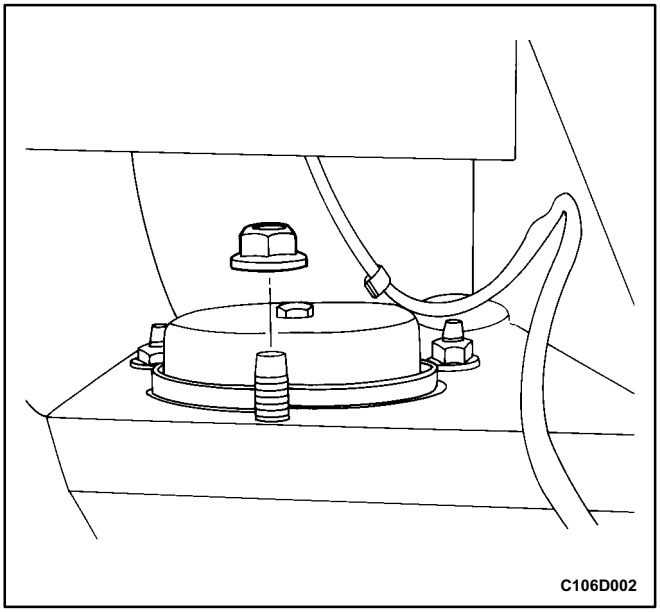

1. Remove the rear seatback. Refer to *Section 9H, Seats*.
2. Remove the rear strut mount to body nuts.

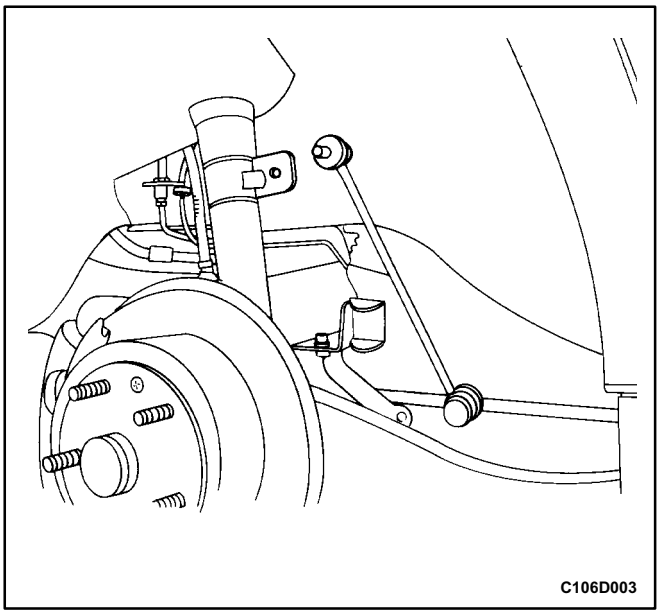

3. Raise and suitably support the vehicle.
4. Remove the wheel. Refer to *Section 2E, Tires and Wheels*.
5. Remove the stabilizer link to strut assembly nut and disconnect the stabilizer link from the strut assembly.
6. Remove the clip holding the brake hose to the strut assembly. Refer to *Section 4E, Rear Brakes*.

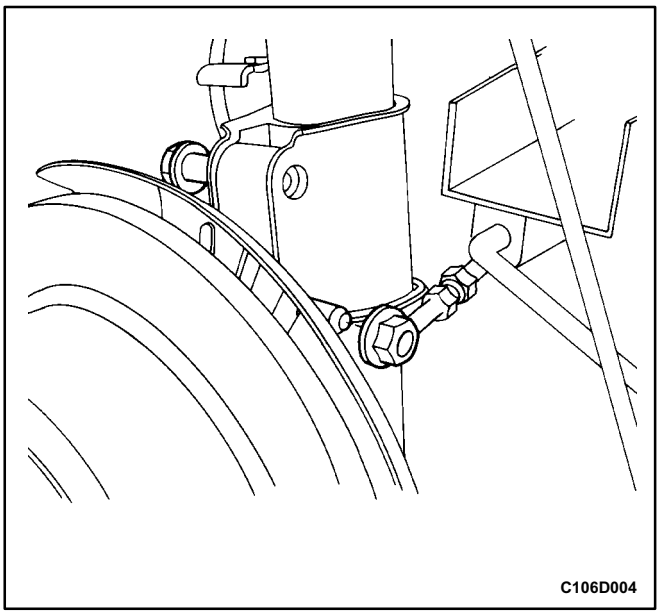

7. On vehicles equipped with the antilock brake system, disconnect the ABS sensor line from the rear of the strut assembly. Refer to *Section 4F, Antilock Brake System and Traction Control System*.
8. Remove the brake caliper from the rotor. Support the brake caliper. Refer to *Section 4E, Rear Brakes*.
9. Remove the knuckle to strut assembly nuts and the bolts.

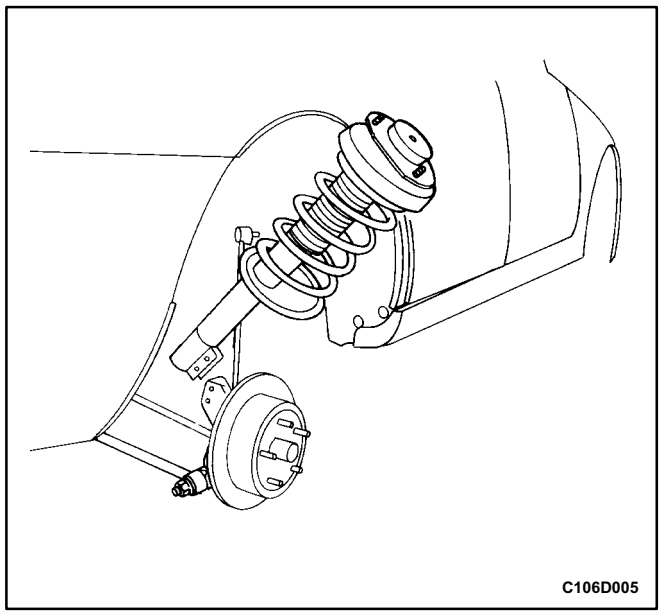

10. Remove the rear strut assembly from the vehicle.

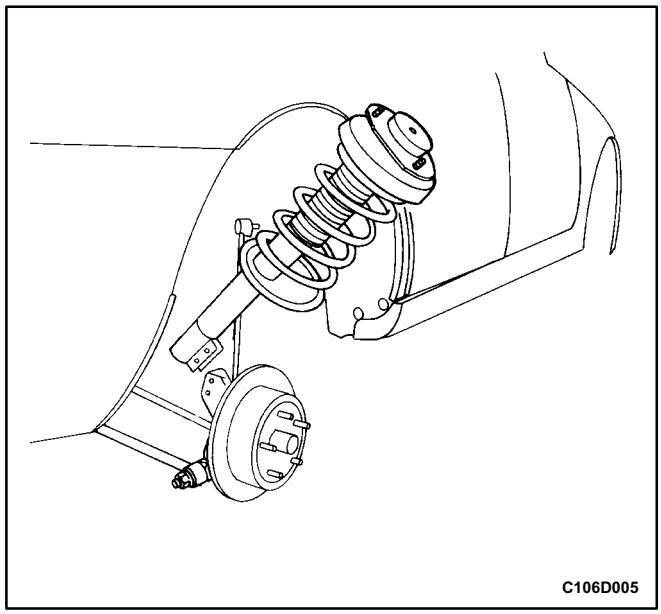

Installation Procedure

1. Install the rear strut assembly into the vehicle.

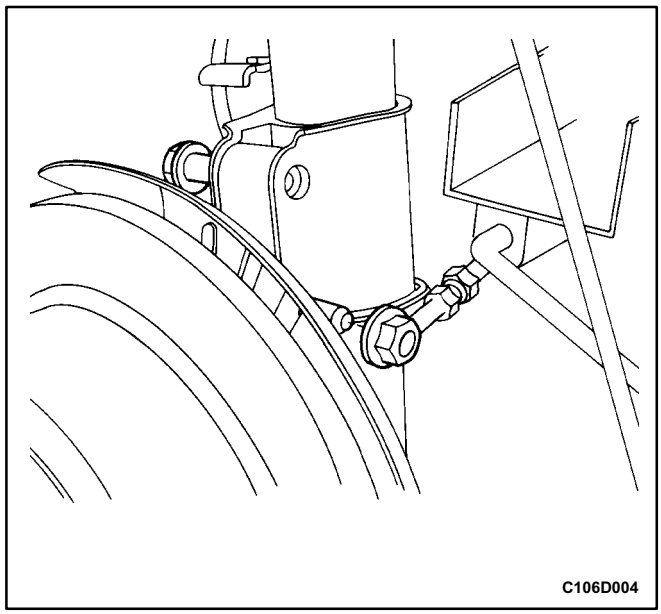

2. Install the knuckle to strut assembly nuts and bolts.

Tighten

Tighten the knuckle to strut assembly nuts to 120 N•m (89 lb•ft).

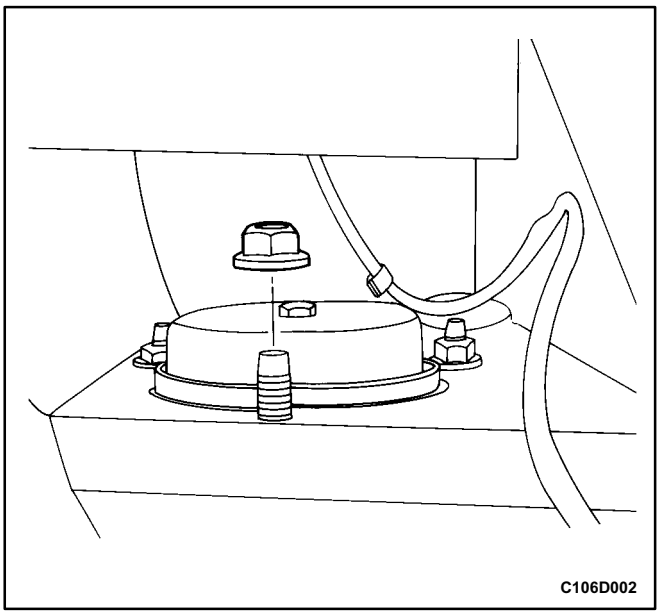

3. Lower the vehicle. While a second technician holds the strut assembly in place, attach the strut mount to body nuts.

   Tighten

   Tighten the strut mount to body nuts to 45 N•m (33 lb•ft).
4. Install the rear seatback. Refer to *Section 9H, Seats*.
5. Install the brake caliper onto the rotor and install the clip holding the brake hose to the strut assembly. Refer to *Section 4E, Rear Brakes*.

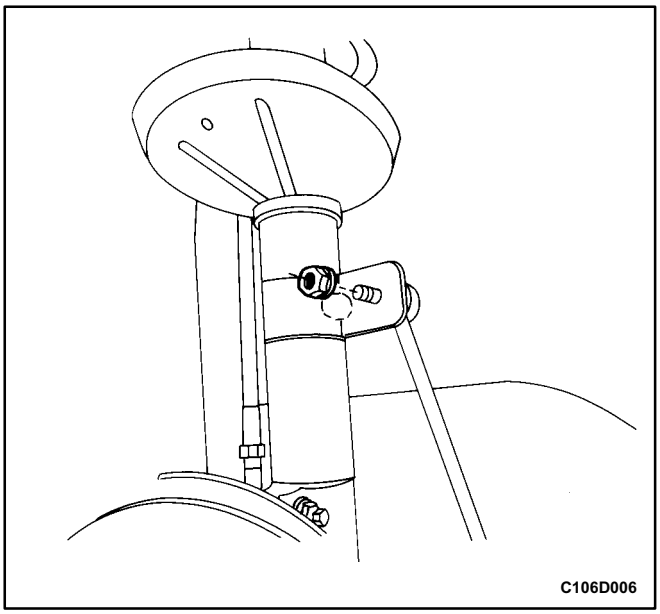

6. On vehicles equipped with the antilock brake system, connect the ABS sensor line to the rear of the strut assembly. Refer to *Section 4F, Antilock Brake System and Traction Control System*.
7. Connect the stabilizer link to the strut assembly and install the stabilizer linktostrut assembly nut.

   Tighten

   Tighten the stabilizer link to strut assembly nut to 45 N•m (33 lb•ft).
8. Install the wheel. Refer to *Section 2E, Tires and Wheels*.
9. Lower the vehicle completely.

KNUCKLE ASSEMBLY

Removal Procedure

1. Raise and suitably support the vehicle.
2. Remove the wheel. Refer to *Section 2E, Tires and Wheels*.
3. On vehicles equipped with the antilock braking system, remove the ABS speed sensor. Refer to *Section 4F, Antilock Brake System and Traction Control System*.
4. Remove the clip securing the brake line to the strut assembly. Remove the brake caliper from the rotor and support the caliper. Refer to *Section 4E, Rear Brakes*.
5. Disconnect the parking brake from the knuckle assembly. Refer to *Section 4G, Parking Brake.*
6. Disconnect the front and rear parallel links from the knuckle. Refer to „Parallel Links” in this section.
7. Disconnect the rear trailing link from the rear knuckle. Refer to „Rear Trailing Link” in this section.

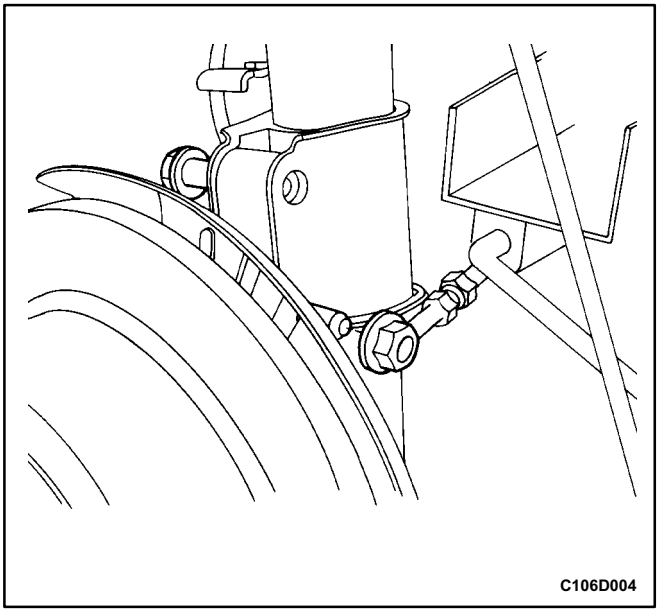

8. Remove the rear knuckle to strut assembly nuts and the bolts.

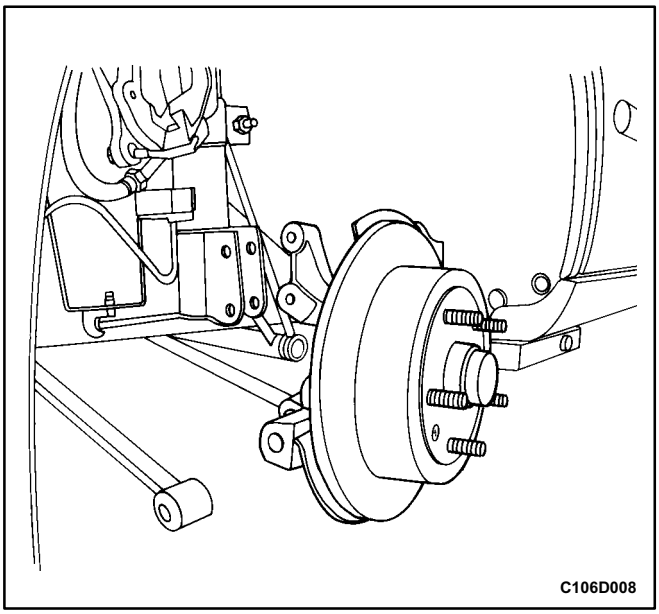

9. Remove the rear knuckle from the strut assembly.

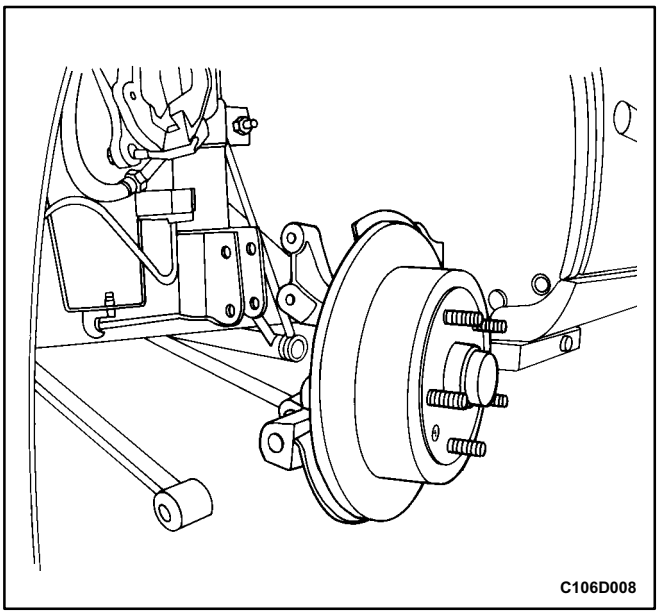

Installation Procedure

1. Install the rear knuckle into the vehicle.

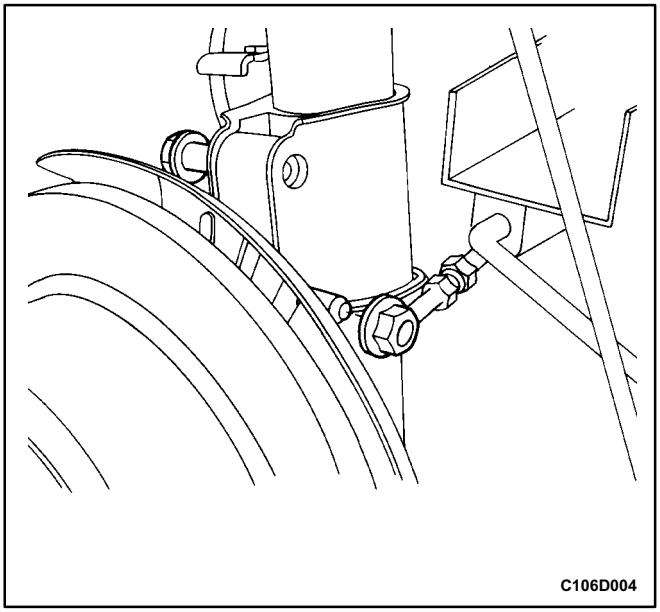

2. Install the knuckle to strut assembly bolts and nuts.

   Tighten

   Tighten the knuckle to strut assembly nuts to 135 N•m (100 lb•ft).
3. Connect the rear trailing link to the rear knuckle. Refer to „Trailing Links and Bracket" in this section.
4. Connect the front and rear parallel links to the knuckle. Refer to „Parallel Links" in this section.
5. Connect the parking brake to the knuckle assembly. Refer to *Section 4G, Parking Brake.*
6. Install the rear brake caliper onto the knuckle assembly and the clip holding the brake line to the strut assembly. Refer to *Section 4E, Rear Brakes.*
7. On vehicles equipped with the antilock braking system, install the ABS speed sensor. Refer to *Section 4F, Antilock Brake System and Traction Control System*.
8. Install the wheel. Refer to *Section 2E, Tires and Wheels*.
9. Lower the vehicle.

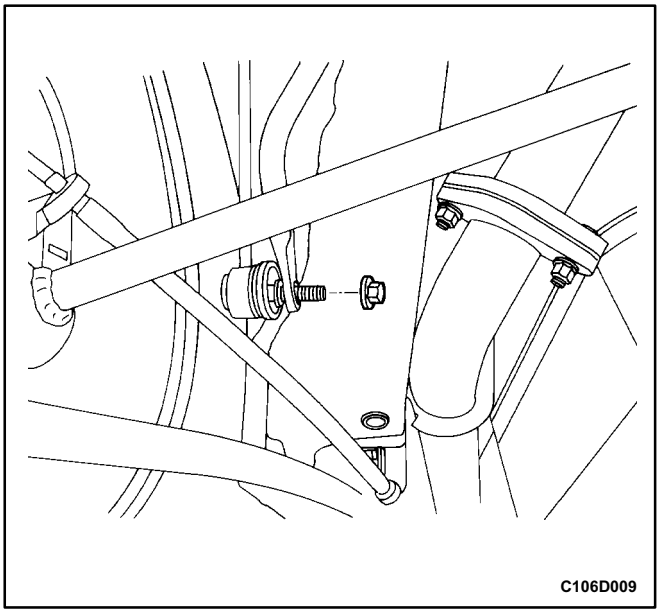

STABILIZER SHAFT AND INSULATORS

Removal Procedure

1. Raise and suitably support the vehicle.
2. Remove the stabilizer shaft to stabilizer link nuts.

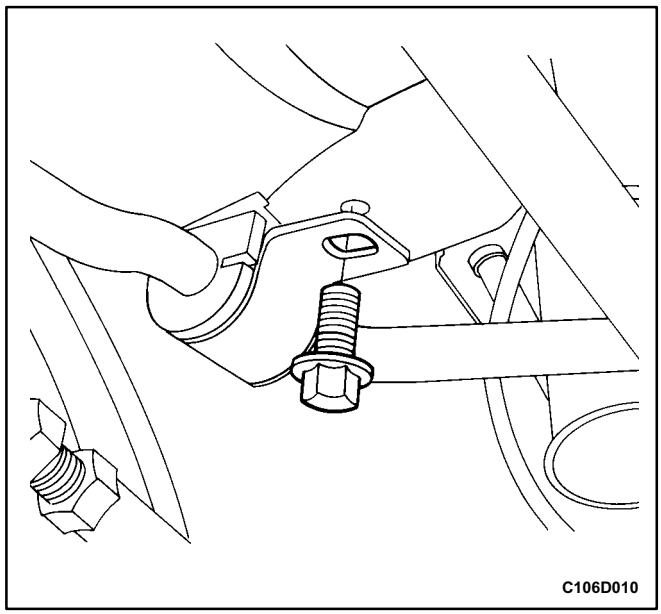

3. Remove the stabilizer shaft clamp bolts and stabilizer shaft clamp.
4. Remove the stabilizer shaft and insulators from the vehicle.

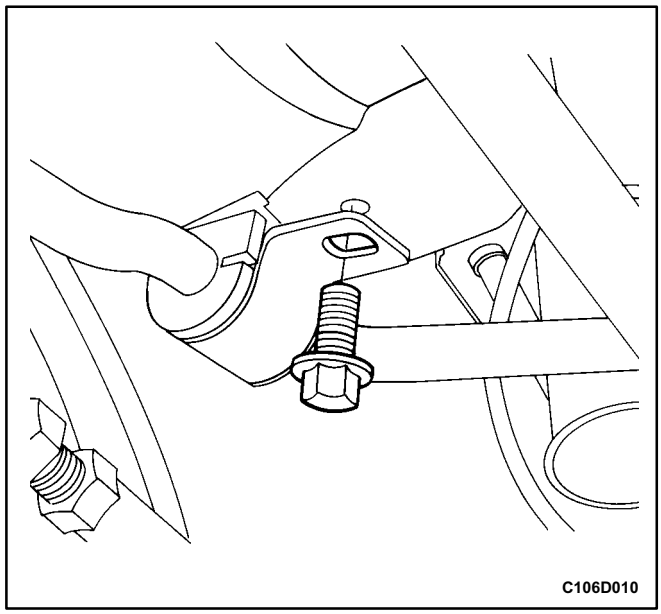

Installation Procedure

1. Install the stabilizer shaft and insulators into the vehicle.
2. Install the stabilizer shaft clamp and the stabilizer shaft clamp bolts. Do not tighten.

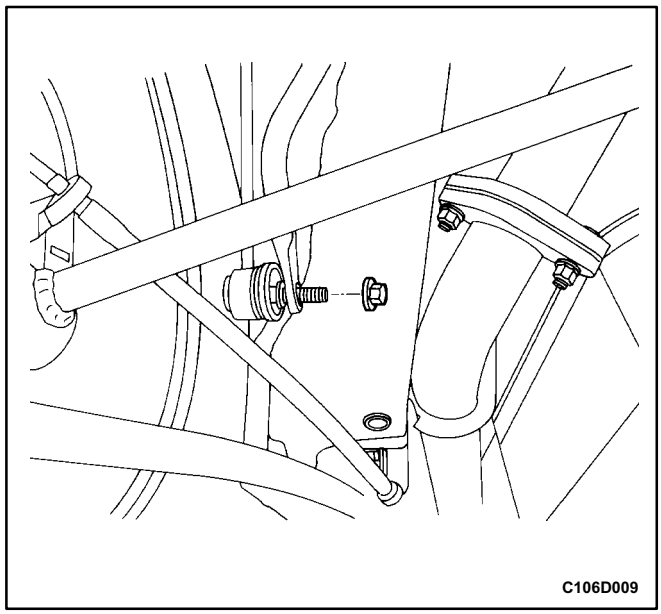

3. Connect the stabilizer shaft to the stabilizer link with the stabilizer shaft to stabilizer link nuts.

Tighten

Tighten the stabilizer shaft to stabilizer link nuts to 45 N•m (33 lb•ft).

Tighten

Tighten the stabilizer shaft clamp bolts to 37 N•m (27 lb•ft).

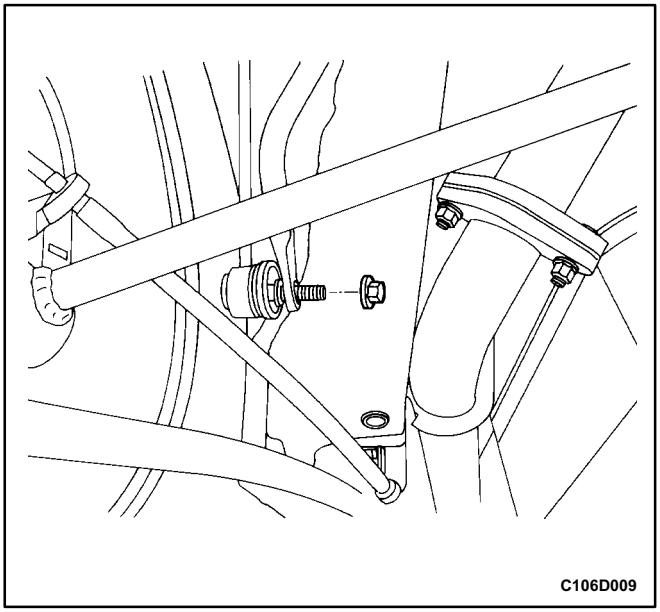

STABILIZER LINK

Removal Procedure

1. Raise and suitably support the vehicle.
2. Remove the stabilizer shaft•to•stabilizer link nut.

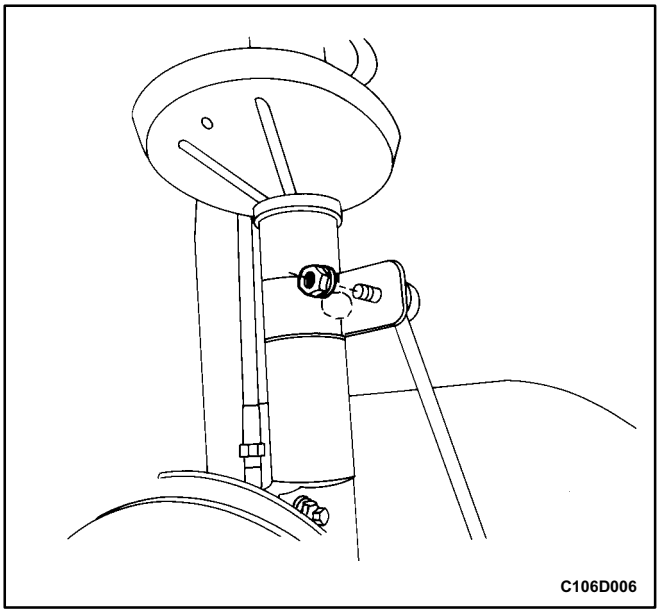

3. Remove the stabilizer shaft link to strut assembly nut.

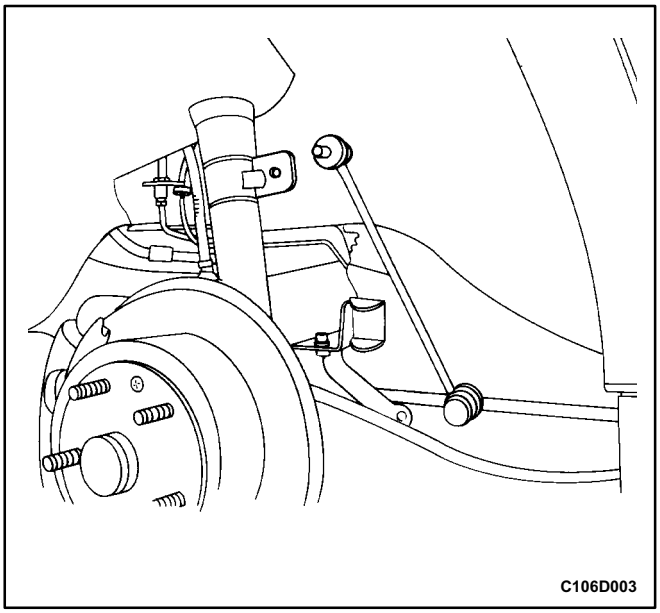

4. Remove the stabilizer link.

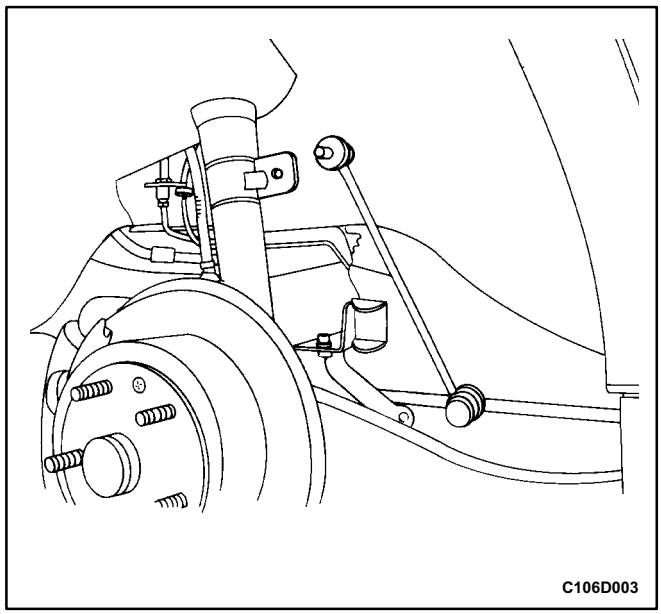

Installation Procedure

1. Install the stabilizer link.

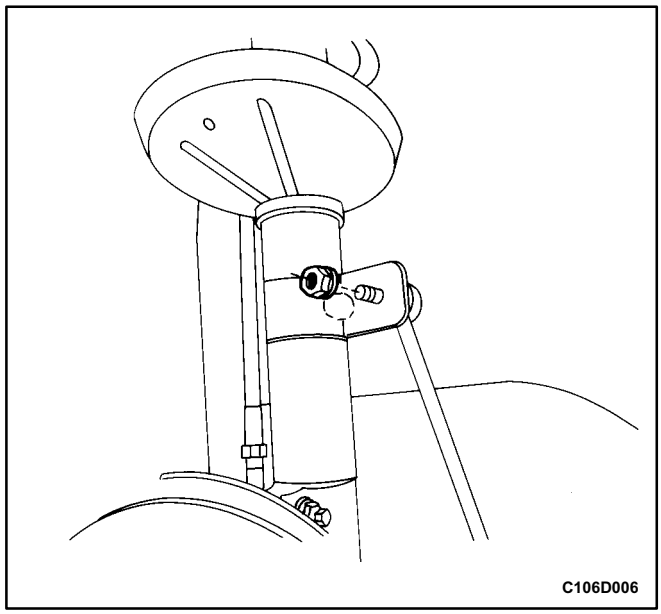

2. Connect the stabilizer link to the strut assembly with the stabilizer link to strut assembly nut. Do not tighten.
3. Connect the stabilizer link to the stabilizer shaft with the stabilizer shaft to stabilizer link nut.

Tighten

Tighten the stabilizer link to strut assembly nut to 45 N•m (33 lb ft).

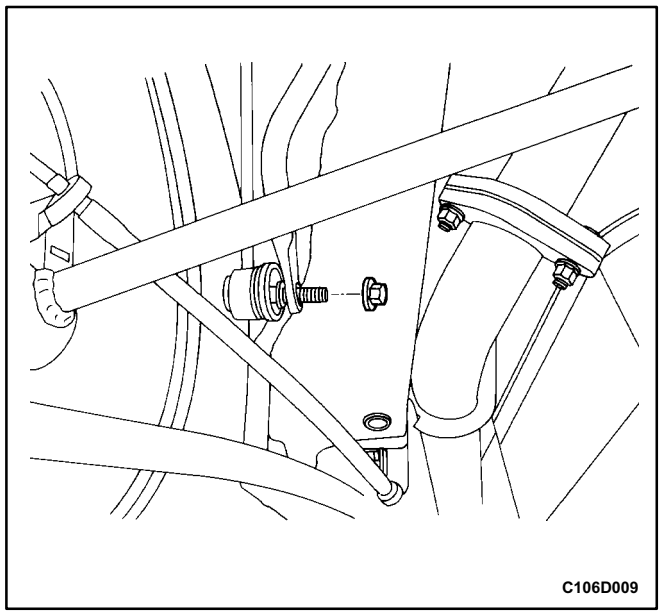

Tighten

Tighten the stabilizer shaft to stabilizer link nut to 45 N•m (33 lb ft).

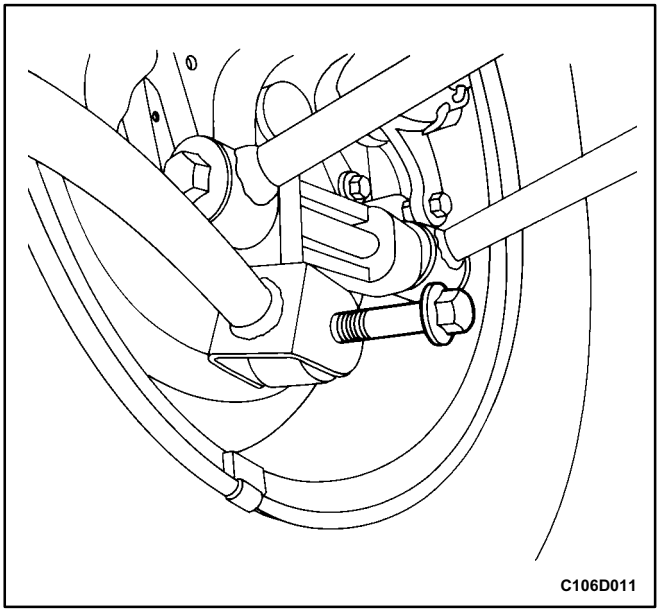

TRAILING LINK AND BRACKET

Removal Procedure

1. Raise and suitably support the vehicle.
2. Remove the rear trailing link to rear knuckle bolt.

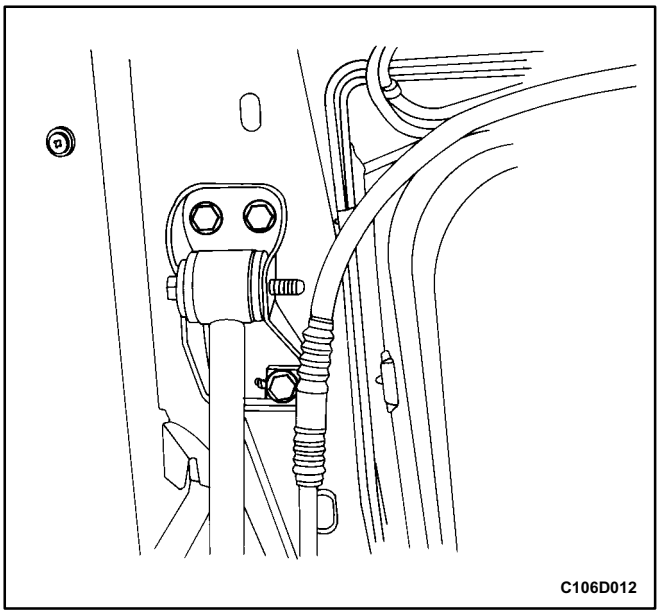

3. Remove the rear trailing link bracket to body bolts.

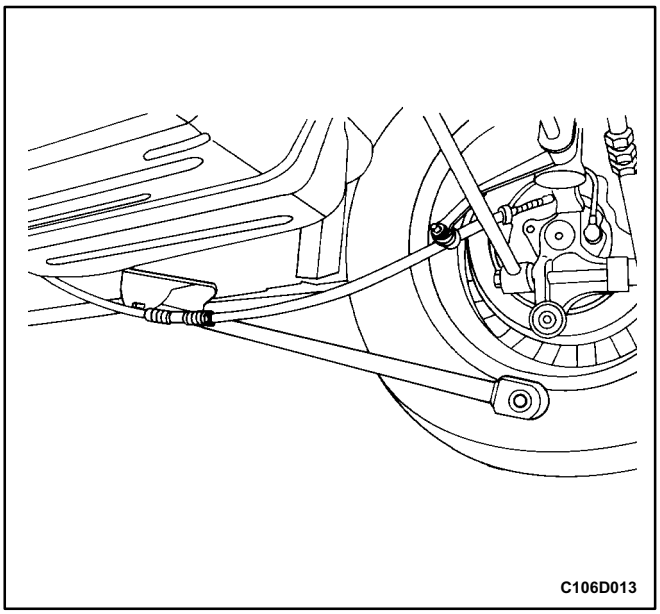

4. Remove the rear trailing link and bracket.

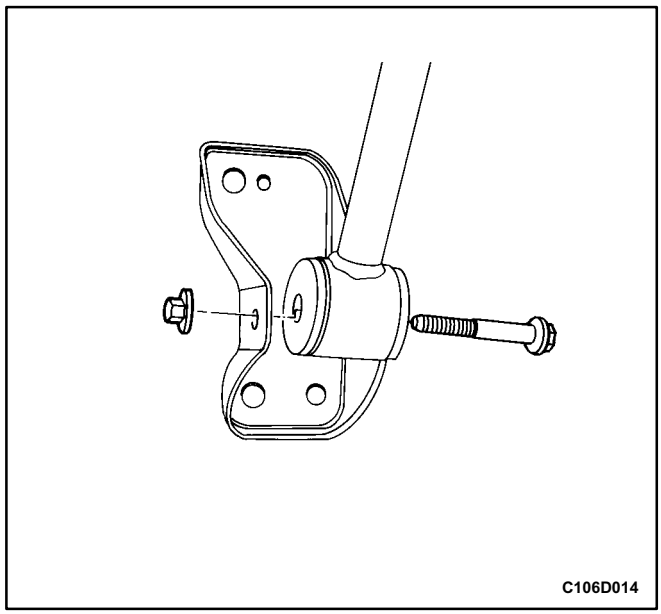

5. Remove the trailing link bracket nut and bolt.
6. Separate the trailing link from the trailing link bracket.

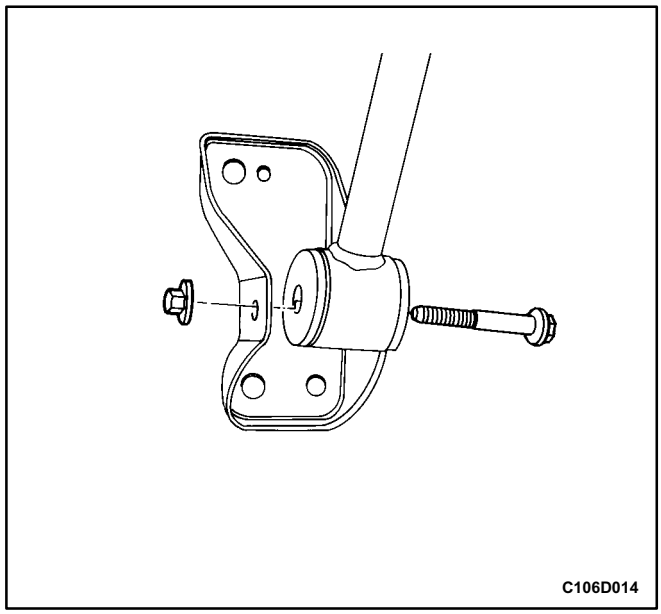

Installation Procedure

1. Connect the trailing link and the trailing link bracket.
2. Install the rear trailing link bracket nut and bolt.

Tighten

Tighten the trailing link to trailing link bracket nut to 100 N•m (73 lb•ft).

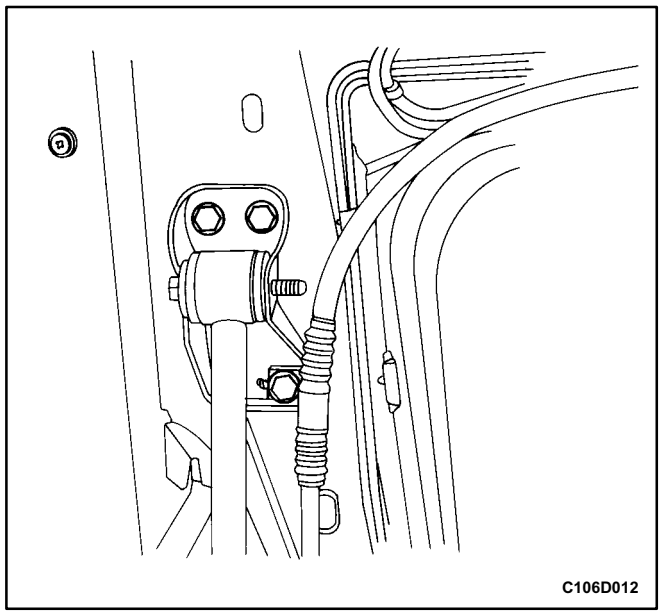

3. Install the rear trailing link and bracket into the vehicle.
4. Install the trailing link bracket to body bolts.

Tighten

Tighten the rear trailing link bracket to body bolts to 90 N•m (66 lb•ft).

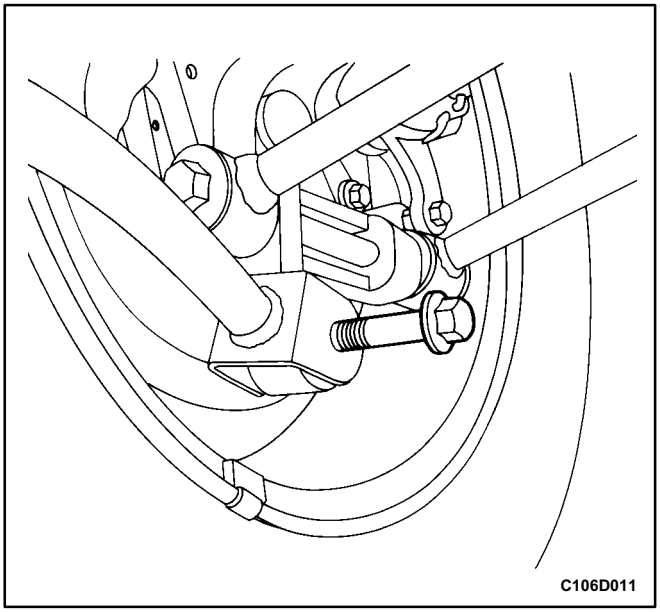

5. Install the trailing link to knuckle bolt.

   Tighten

   Tighten the rear trailing link to knuckle bolt to 120 N•m (89 lb•ft).

6. Lower the vehicle.

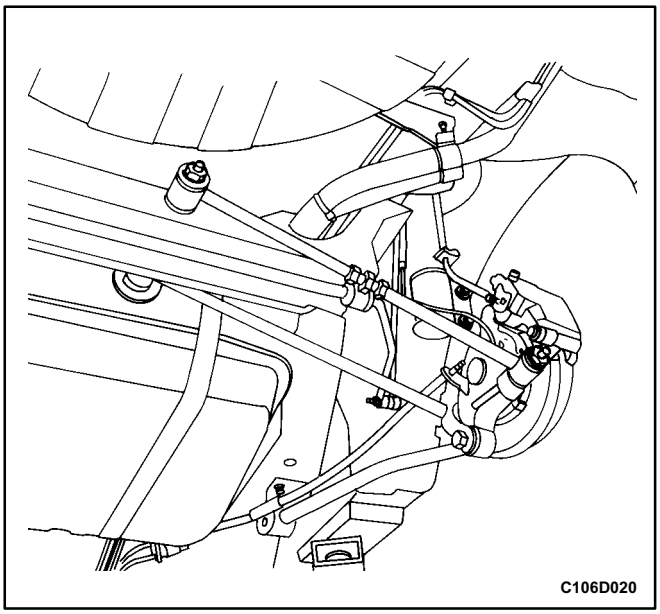

PARALLEL LINKS

Removal Procedure

1. Raise and suitably support the vehicle.
2. Remove the wheel. Refer to *Section 2E, Tires and Wheels*.
3. Loosen all of the bolts that connect the front and rear parallel links to the knuckle and the rear crossmember.

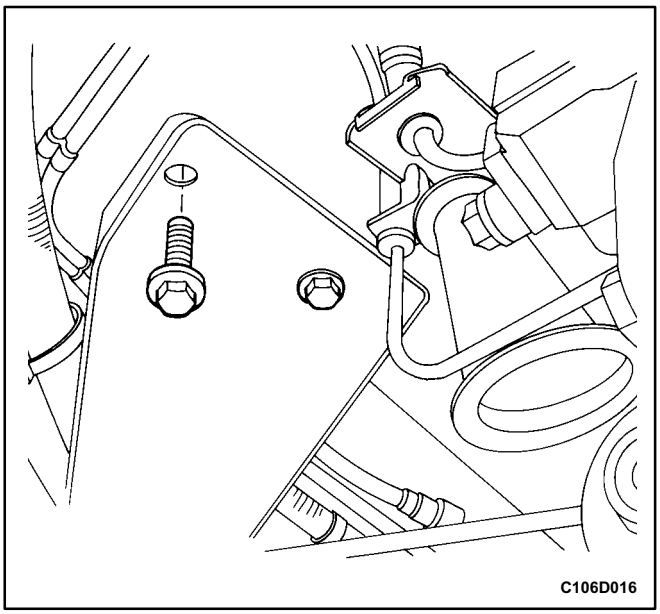

4. Remove the rear crossmember to body bolts.

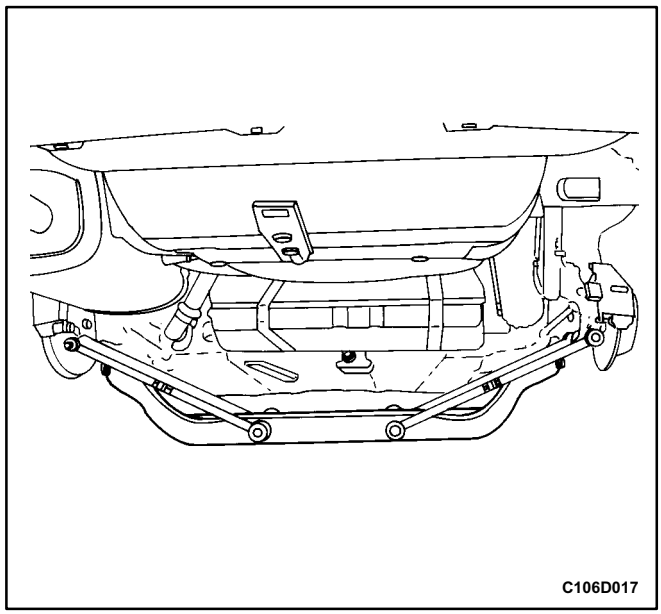

5. Lower the rear crossmember.

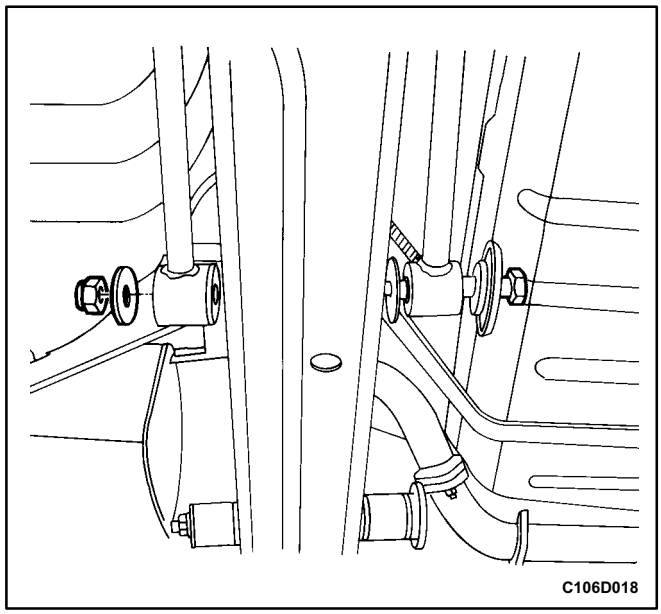

6. Remove the parallel link bolt from the rear crossmember.

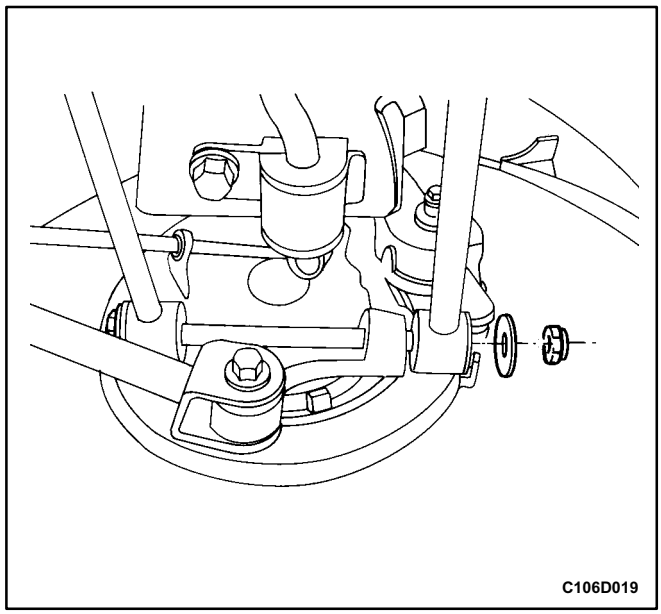

7. Remove the parallel link bolt from the rear knuckle.
8. Remove the front and rear parallel links.

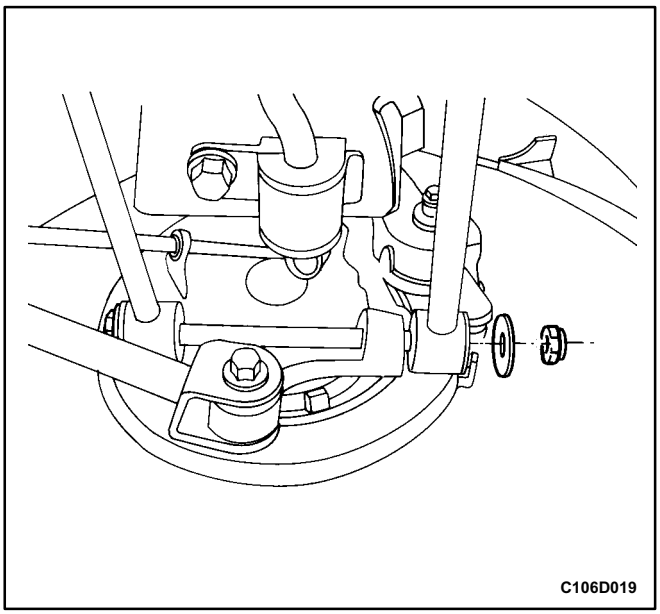

Installation Procedure

1. Install the front and rear parallel links.
2. Install the parallel link bolt onto the rear knuckle.

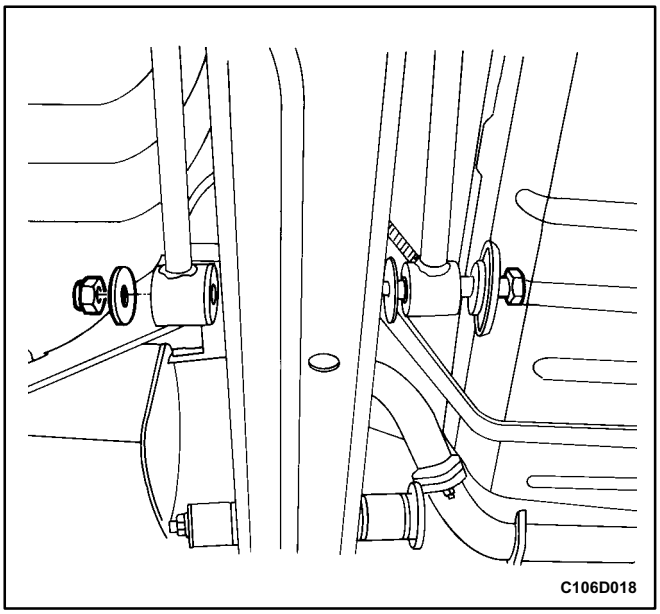

3. Install the parallel link bolt onto the rear crossmember.

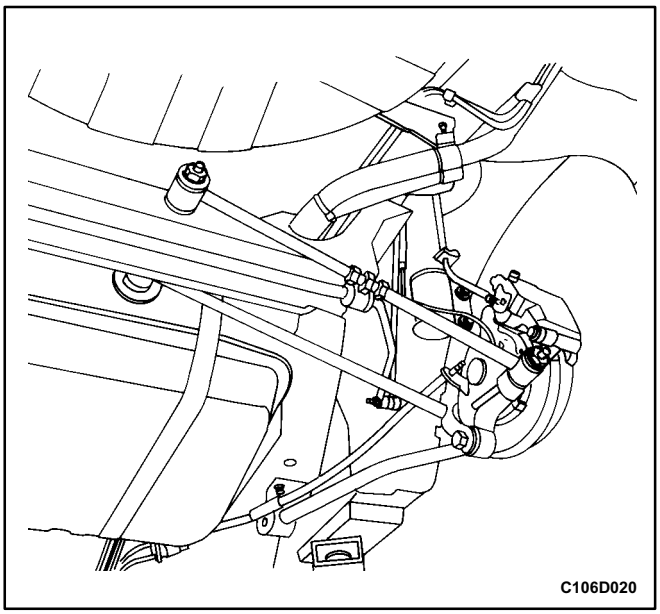

4. Raise the crossmember and install the rear crossmember to body bolts.

Tighten

Tighten the crossmember to body bolts to 110 N•m (81 lb•ft).

Tighten the parallel link to cross member nut to 120 N.m (89 lb•ft) and the parallel link to knuckle nut to 135 N•m (100 lb•ft).

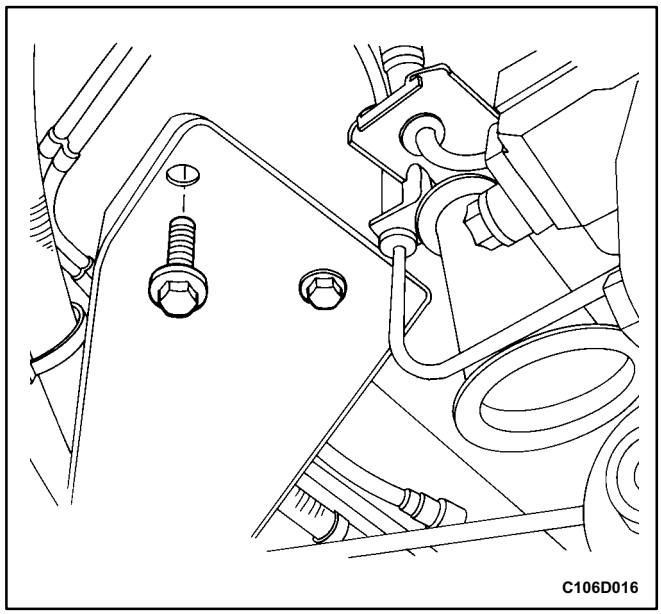

5. Install the wheel. Refer to *Section 2E, Tires and Wheels*.
6. Perform a rear toe adjustment. Refer to *Section 2B, Wheel Alignment*.

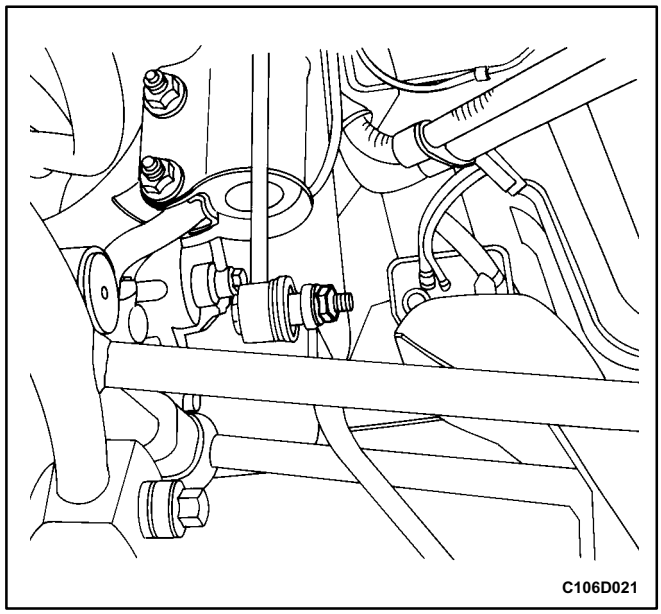

CROSSMEMBER

Removal Procedure

1. Raise and suitably support the vehicle.
2. Remove the parallel links. Refer to „Parallel Links” in this section.
3. Remove the stabilizer shaft to stabilizer link nuts and remove the rear crossmember.

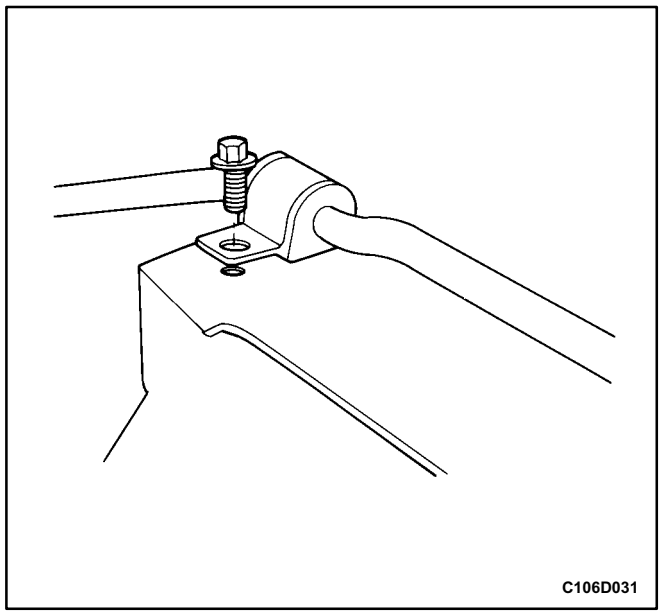

4. Remove the stabilizer shaft clamp bolts and remove the stabilizer shaft and insulators from the rear crossmember.

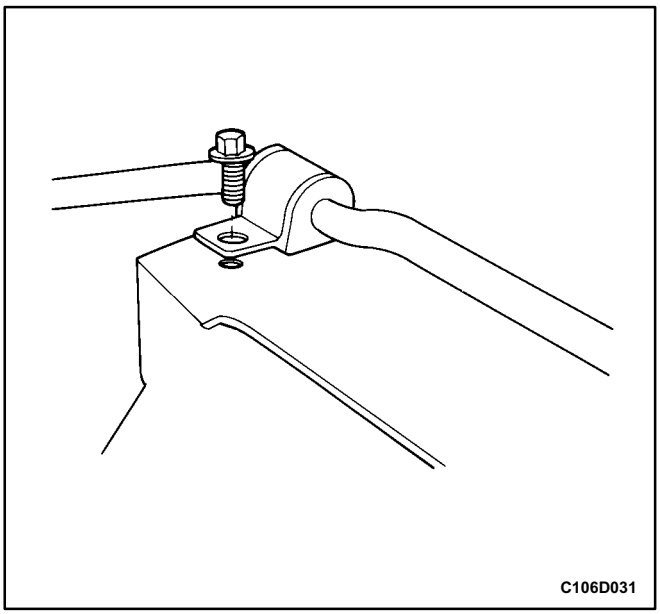

Installation Procedure

1. Install the stabilizer shaft and insulators and secure with the stabilizer shaft clamps and bolts.

   Tighten

   Tighten the stabilizer shaft clamp bolts to 37 N•m (27 lb•ft).

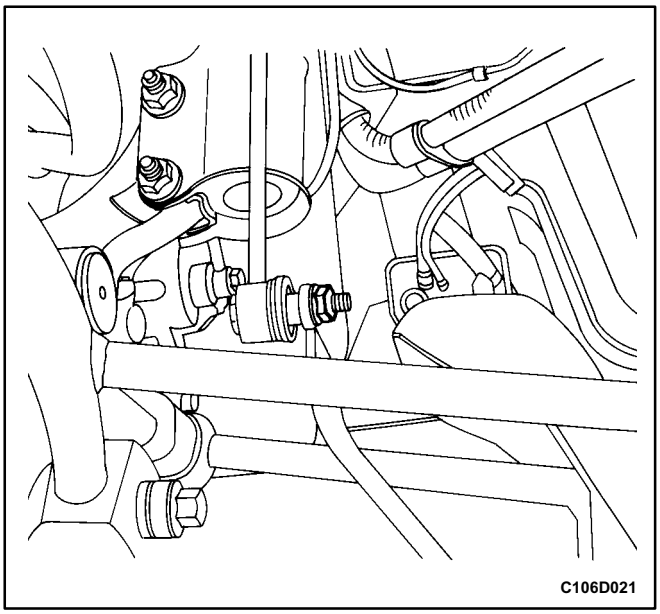

2. Install the rear crossmember and connect the stabilizer shaft to the stabilizer links.
3. Install the stabilizer shaft to stabilizer link nuts.

   Tighten

   Tighten the stabilizer shaft to stabilizer link nuts to 45 N•m (33 lb•ft).
4. Install the parallel links. Refer to „Parallel Links" in this section.
5. Lower the vehicle.

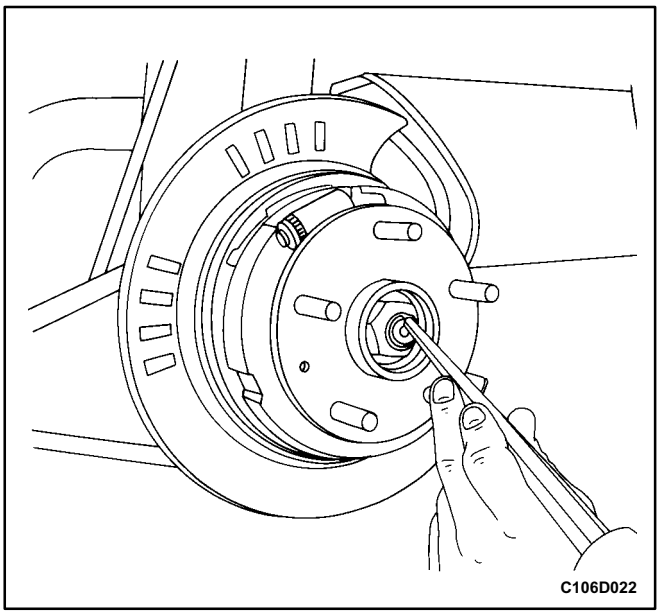

HUB AND BEARING ASSEMBLY

Removal Procedure

1. Raise and suitably support the vehicle.
2. Remove the wheel. Refer to *Section 2E, Tires and Wheels*.
3. Remove the rear brake caliper and rear brake rotor. Refer to *Section 4E, Rear Brakes*.
4. Remove the dust cap and straighten the indent in the caulking nut with a drift and a hammer.

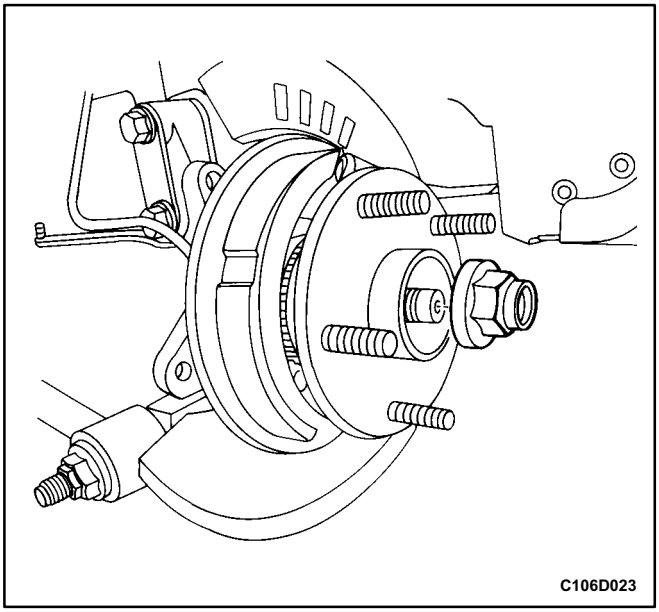

5. Remove the caulking nut.

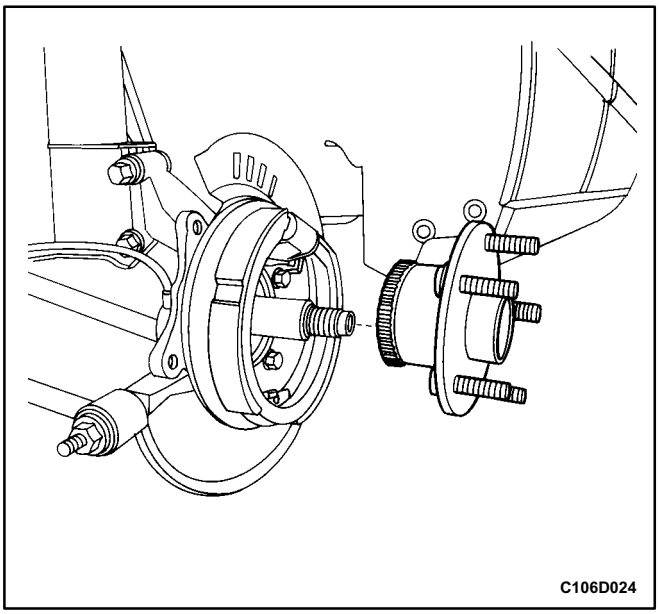

6. Remove the hub and bearing assembly.

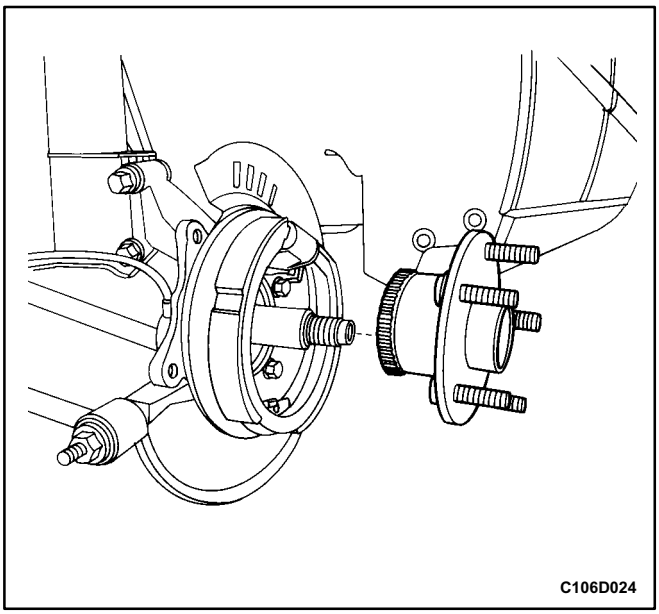

Installation Procedure

1. Install the hub and bearing assembly.

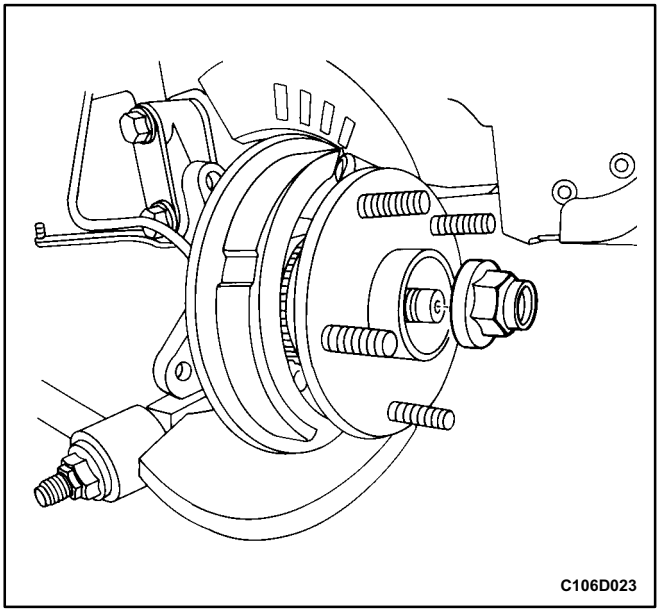

2. Install a new caulking nut.

Tighten

Tighten the caulking nut to 285 N•m (210 lb•ft).

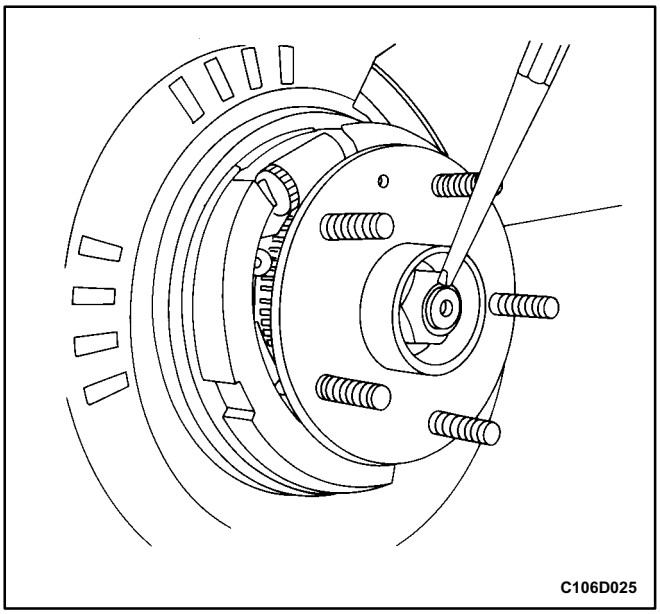

3. Indent the caulking nut onto the spindle.
4. Install the rear brake rotor and rear brake caliper. Refer to *Section 4E, Rear Brakes*.
5. Install the wheel. Refer to *Section 2E, Tires and Wheels*.
6. Lower the vehicle.

UNIT REPAIR

SPRINGS AND INSULATORS

Tools Required

KM-329-A Spring Compressor

Disassembly Procedure

1. Remove the rear strut assembly from the vehicle. Refer to „Strut Assembly” in this section.
2. Mount the rear strut assembly into the spring compressor KM-329-A. Ensure that the hooks are properly seated.

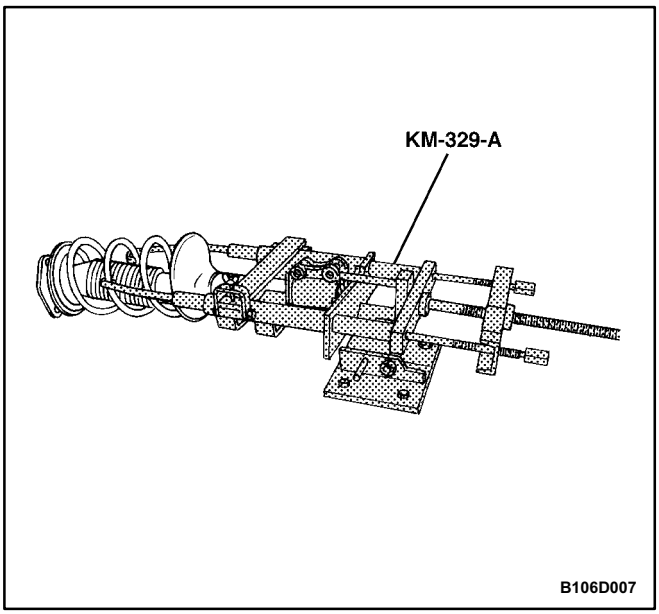

3. Compress the spring.
4. Remove the lock nut from the strut dampener rod.

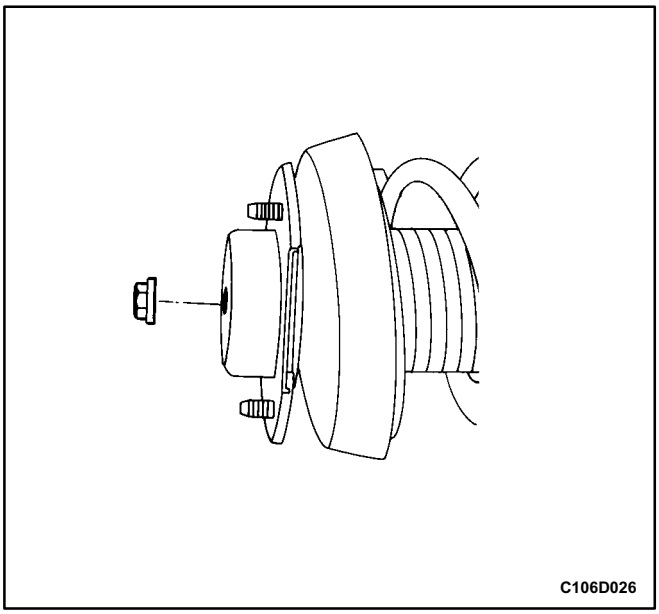

5. Remove the rear strut mount.

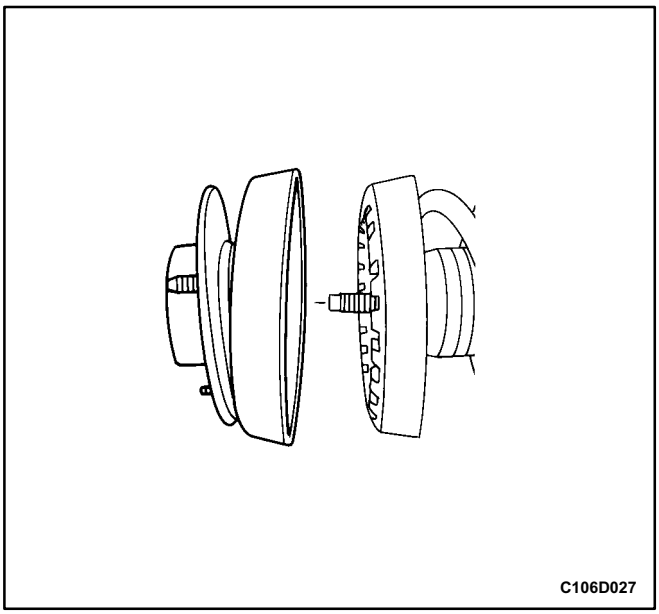

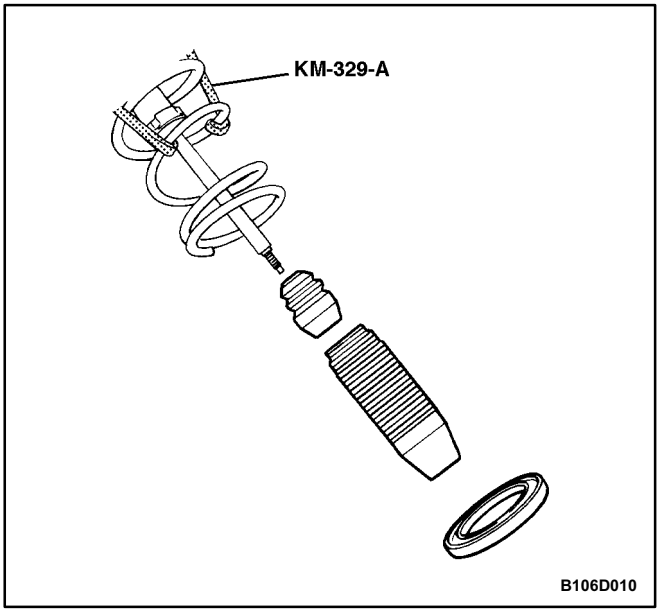

6. Remove the rear spring upper insulator, the dust cover, and the hollow bumper.

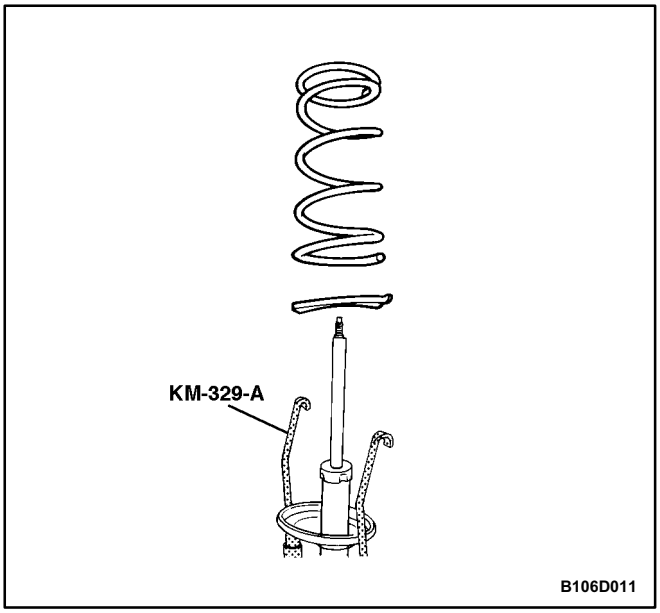

7. Release the spring.
8. Remove the rear spring and the rear spring lower insulator.

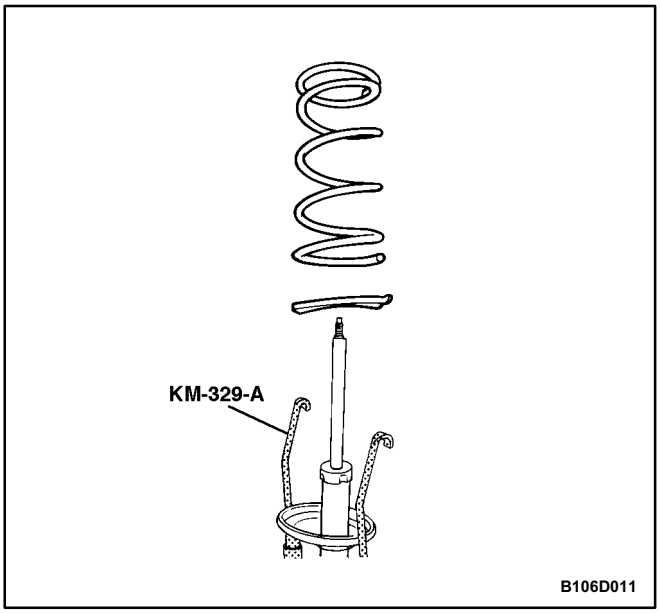

Assembly Procedure

1. Install the rear spring lower insulator and the rear spring.

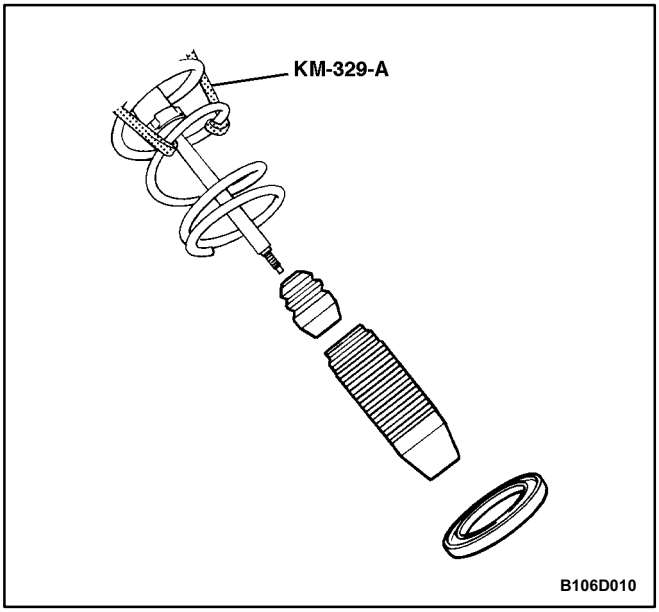

2. Compress the spring.
3. Install the hollow bumper, the dust cover, and the rear spring upper insulator.

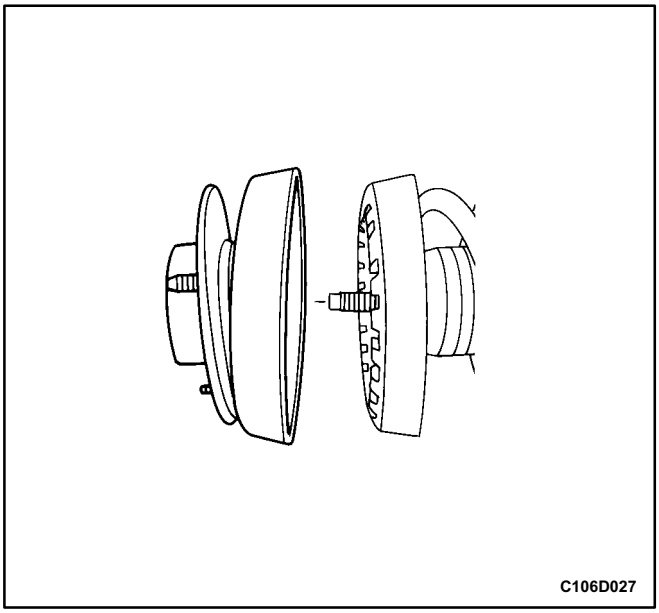

4. Install the rear strut mount.

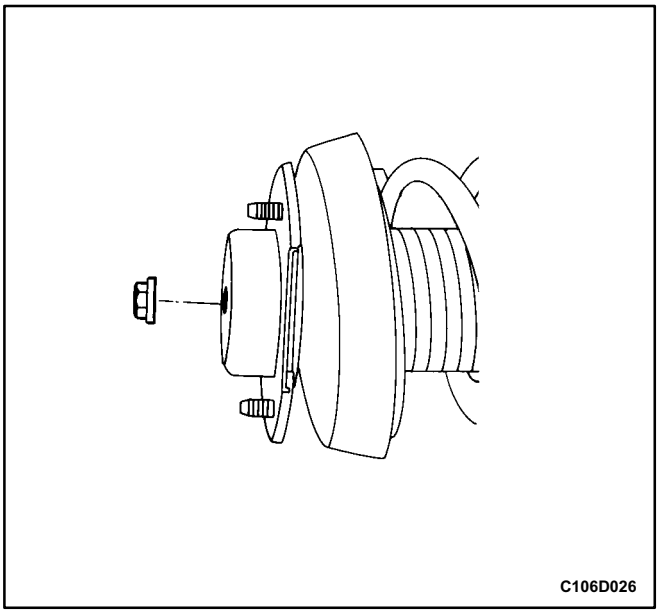

5. Install the lock nut onto the strut dampener rod.

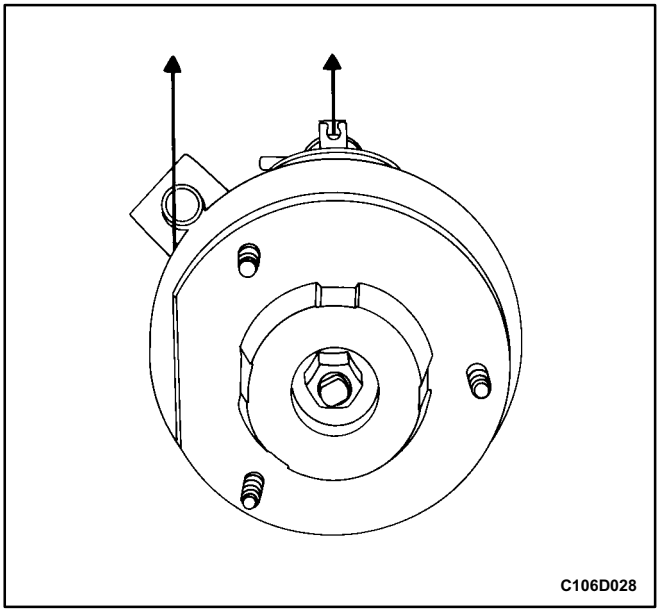

6. Align the flat side of the strut mount with the ABS sensor line bracket on the strut dampener so that the two are parallel to each other.

   Tighten

   Tighten the damper rod to strut mount nut to 80 N•m (59 lb•ft).
7. Release the spring.
8. Remove the strut assembly from the spring compressor and install the strut assembly into the vehicle. Refer to „Strut Assembly" in this section.

KNUCKLE

Disassembly Procedure

Important: To facilitate the removal of the caulking nut, it should be loosened before the knuckle is removed from the vehicle. Refer to „Hub and Bearing Assembly" in this section.

1. Remove the knuckle from the vehicle. Refer to „Knuckle Assembly" in this section.
2. Remove the brake caliper and brake rotor. Refer to *Section 4E, Rear Brakes*.
3. Remove the dust cap, the caulking nut, and the hub and bearing assembly. Refer to „Hub and Bearing Assembly" in this section.
4. Remove the rear disc brake assembly. Refer to *Section 4E, Rear Brakes*.
5. Remove the brake splash shield. Refer to *Section 4E, Rear Brakes.*

Assembly Procedure

1. Install the brake splash shield. Refer to *Section 4E, Rear Brakes.*
2. Install the rear disc brake assembly. Refer to *Section 4E, Rear Brakes*.
3. Install the hub and bearing assembly, the caulking nut, and the dust cap. Refer to „Hub and Bearing Assembly" in this section.
4. Install the brake caliper and brake rotor. Refer to *Section 4E, Rear Brakes*.
5. Install the knuckle into the vehicle. Refer to „Knuckle Assembly" in this section.

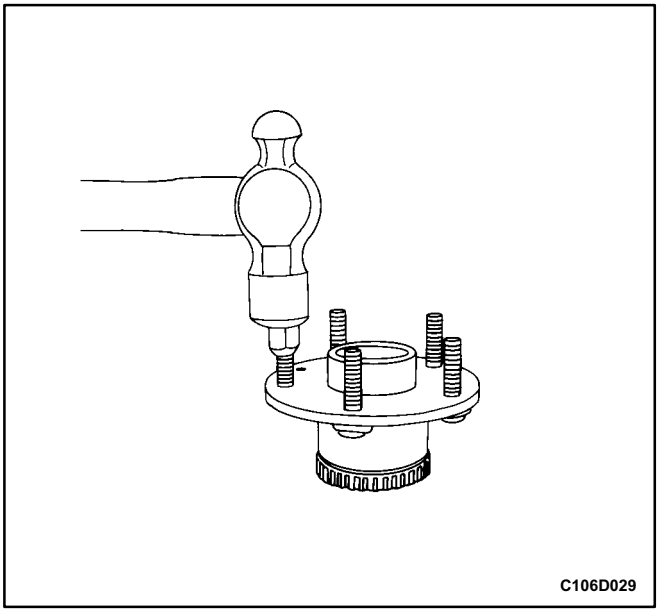

HUB AND BEARING

Important: The rear bearings are not serviceable. If the bearings must be replaced, the hub and bearing assembly must be replaced as a unit.

Disassembly Procedure

1. Raise and suitably support the vehicle.
2. Remove the hub and bearing assembly from the vehicle. Refer to „Hub and Bearing Assembly" in this section.
3. Use a hammer to drive out any damaged hub studs.

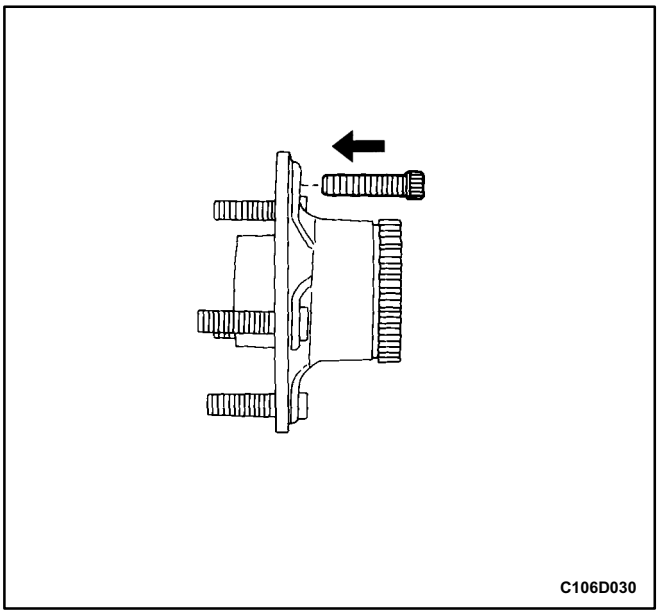

Assembly Procedure

1. Replace any damaged hub studs with a new hub stud.

GENERAL DESCRIPTION AND SYSTEM OPERATION

REAR SUSPENSION

The rear suspension is fully independent, consisting of a crossmember with four parallel links, two trailing links, two strut assemblies with coil springs and insulators, and two knuckles containing the hub and bearing assemblies. The strut assemblies support the weight of the vehicle using coil springs positioned around the strut dampeners. The coil springs are seated on insulators attached to the upper mount and the lower spring seat of the strut assembly. The parallel links and the trailing link bracket have rubber isolator bushings at each end and are attached to the crossmember and the knuckle. The rear parallel link is attached to the crossmember through adjustment cams that are used to adjust rear toe. The trailing links are attached to the body, through the trailing link bracket, and the bottom of the knuckle. A forged knuckle bolts to each strut assembly. Lateral movement of the knuckle is controlled by the parallel links. Fore and aft movement of the knuckle is controlled by the trailing link.

SECTION 2E

TIRES AND WHEELS

TABLE OF CONTENTS

Specifications 2E-1
Tire Size and Pressure Specifications 2E-1
Inflation Pressure Conversion Specifications 2E-2
Fastener Tightening Specifications 2E-2
Diagnosis 2E-2
Wheel Runout 2E-2
Maintenance and Repair 2E-3
On-Vehicle Service 2E-3
Wheel 2E-3
On-Vehicle Balancing 2E-4
Unit Repair 2E-5
Alloy Wheel Porosity 2E-5
Alloy Wheel Refinishing 2E-5
Off-Vehicle Balancing 2E-7
Correcting Non Uniform Tires 2E-7
Tire and Wheel Match Mounting 2E-8
Tire Mounting and Dismounting 2E-8
General Description and System Operation 2E-9
Tire and Wheel Balancing 2E-9
Tire Chain Usage 2E-10
Tires 2E-10
All Season Tires 2E-11
Metric Sized Tires 2E-11
Label 2E-11
Spare Tire 2E-11
Wheels 2E-11
Inflation of Tires 2E-11

SPECIFICATIONS

TIRE SIZE AND PRESSURE SPECIFICATIONS

Inflation Pressure at Full Load

Engine	Tires	Wheel	Front		Rear	
-	-	-	kPa	psi	kPa	psi
2.0 SOHC	195/70R14	5.5Jx14 (Steel)	200	29	200	29
2.0 DOHC	205/60R15	6.0Jx15 (Steel)	200	29	200	29
2.0 SOHC	205/60R15	6.0Jx15 (Alloy)	200	29	200	29
2.0 DOHC	205/60R15	6.0Jx15 (Alloy)	200	29	200	29

INFLATION PRESSURE CONVERSION SPECIFICATIONS

kPa	psi	kPa	psi	kPa	psi
140	20	185	27	235	34
145	21	190	28	240	35
155	22	200	29	250	36
160	23	205	30	275	40
165	24	215	31	310	45
170	25	220	32	345	50
180	26	230	33	380	55

FASTENER TIGHTENING SPECIFICATIONS

Application	N•m	LbFt	LbIn
Wheel Nuts (Alloy Wheel)	100	74	-
Wheel Nuts (Steel Wheel)	100	74	-

DIAGNOSIS

WHEEL RUNOUT

Measure wheel runout with an accurate dial indicator. Measurements may be taken with the wheels either on or off the vehicle, using an accurate mounting surface such as a wheel balancer. Measurements may be taken with or without the tire mounted on the wheel.

Measure radial runout and lateral runout on both the inboard and the outboard rim flanges. With the dial indicator firmly seated next to the wheel and tire assembly, slowly rotate the wheel one revolution and record the indicator reading. If any measurement exceeds the following specifications and there is a vibration that wheel balancing will not correct, replace the wheel. Disregard any indicator readings due to welds, paint runs, or scratches.

Steel Wheels

- Radial runout: 0.8 mm (0.03 inch)
- Lateral runout: 1.0 mm (0.04 inch)

Alloy Wheels

- Radial runout: 0.8 mm (0.03 inch)
- Lateral runout: 1.0 mm (0.04 inch)

Measure free radial runout on the center of the tire tread. The tread can be taped to present a smooth surface. Measure free lateral runout on the outboard side of the tire nearest to the tread.

Steel and Alloy Wheels

- Free radial runout: 1.5 mm (0.06 inch)
- Free lateral runout: 1.5 mm (0.06 inch)

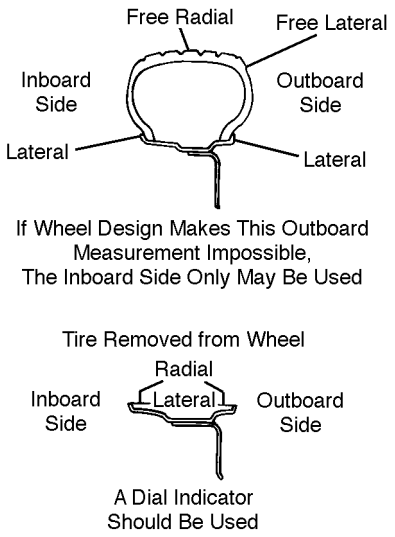

C106E004

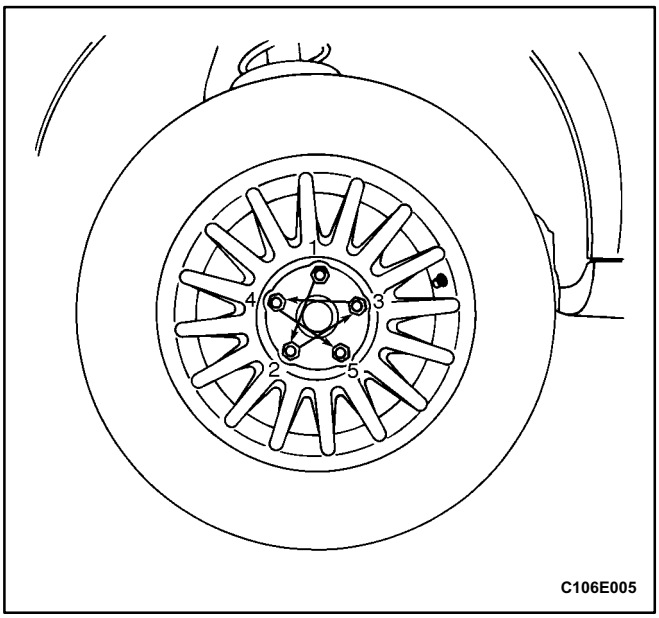

MAINTENANCE AND REPAIR

ON-VEHICLE SERVICE

WHEEL

Removal Procedure

1. Remove the wheel cover.
2. Loosen the wheel nuts.
3. Raise and suitably support the vehicle.
4. Remove the wheel nuts.

Notice: Never use heat to loosen a tight wheel. It can shorten the life of the wheel, the wheel nuts, and the wheel bearings. Excessive force, such as hammering the wheel or tire, can also cause damage and is not recommended. Slight tapping of the wheel sidewall with one's hand or with a rubber mallet is acceptable.

5. Remove the wheel and tire assembly.

Difficulty in removing the wheels from the vehicle can be due to foreign material or to a tight fit between the wheel centerhole and the hub or the rotor. These wheels can be removed by

1. Retightening the wheel nuts on the affected wheel and then loosening the wheel nuts by two turns.
2. Lowering the vehicle and rocking it from side to side as hard as possible, using one or more person's body weight to loosen the wheel.
3. Raising the vehicle and removing the wheel.

Caution: Do not allow the penetrating oil to get on the vertical surfaces between the wheel and the drum (or rotor) because penetrating oil in this area could cause the wheel to work loose as the vehicle is driven, resulting in loss of control and an injury accident.

Penetrating oil is not effective in removing tight wheels. If it is used, however, apply it sparingly and only to the wheel's centerhole area.

Installation Procedure

Notice: Before installing the wheels, remove any buildup of corrosion on the wheel mounting surface and the brake drum or the rotor mounting surface by scraping and brushing them with a wire brush. Installing the wheels without good metal to metal contact at the mounting surfaces can cause the wheel nuts to loosen, which can later allow a wheel to come off while the vehicle is moving. Wheel nuts must be tightened in sequence and to the proper torque to avoid bending the wheel, the brake drum or the rotor.

1. Mount the wheel and tire assembly.
2. Install the wheel nuts in the sequence shown. Do not tighten the wheel nuts.
3. Lower the vehicle.

   Tighten

   Tighten the wheel nuts to 100 N•m (74 lb•ft).
4. Install the wheel cover.

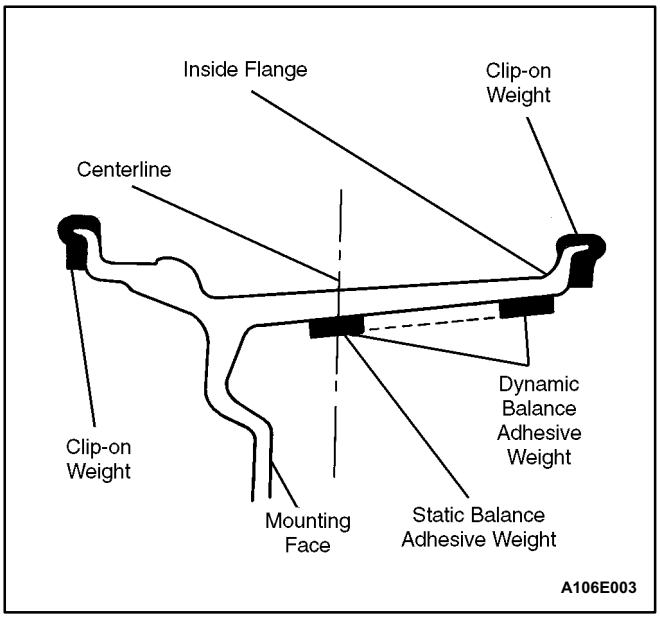

ON-VEHICLE BALANCING

On-vehicle balancing will help correct vibrations due to brake drum, rotor, and wheel cover imbalances.

Notice: Do not allow the front suspension to hang free. When the drive axle is run at an extreme angle, extra vibrations can occur, as well as damage to seals and joints.

1. During on vehicle balancing, do not remove the balance weights from the off vehicle dynamic balance.
2. If more than 1 ounce of additional weight is required, split the weight between the inner and the outer rim flanges.

Caution: Do not spin the drive wheels faster than 55 km/h (35 mph) as indicated by the speedometer. This limit is necessary because the speedometer indicates only one half of the actual wheel speed when one drive wheel is spinning and the other drive wheel is stopped. Personal injury and damage may result from high-speed spinning.

3. Spin the driven tire and wheel assemblies using the engine.

UNIT REPAIR

ALLOY WHEEL POROSITY

Wheel repairs that use welding, heating or peening are not approved.

1. Raise and suitably support the vehicle.
2. Remove the tire and wheel assembly. Refer to „Wheel" in this section.

Caution: To avoid serious injury, do not stand over the tire when inflating, because the bead may break when it snaps over the safety hump. Do not exceed 275 kPa (40 psi) of air pressure in any tire if the beads are not seated. If 275 kPa (40 psi) of air pressure will not seat the beads, deflate the tire. Relubricate the beads. Reinflate the tire. Overinflation may cause the bead to break and cause serious injury.

3. Locate leaking areas by inflating the tire to 345 kPa (50 psi) and dipping the tire and wheel assembly into a water bath.
4. Mark the leak areas and remove the tire from the wheel.
5. Scuff the inside wheel surface at the leak area with 80-grit sandpaper. Clean the leak area with a general-purpose cleaner.
6. Apply a 3.3 mm (0.13 inch) thick layer of adhesive/sealant to the leak area. Allow it to dry for 12 hours.
7. Install the tire on the wheel. Inflate the tire to 345 kPa (50 psi) and check for leaks as in step 3.
8. Adjust the tire pressure to meet specifications. Refer to „Tire Size and Pressure Specifications" in this section.
9. Balance the tire and wheel assembly. Refer to „Tire and Wheel Balancing" in this section.
10. Install the tire and wheel assembly. Refer to „Wheel" in this section.
11. Lower the vehicle.

ALLOY WHEEL REFINISHING

A protective clear or color coating is applied to the surface of the original equipment cast alloy wheels. Surface degradation can develop if this clear coating is damaged or removed. This can happen at some automatic car wash facilities that use silicone carbide-tipped tire brushes to clean white walls and tires. Once the protective coating is damaged, exposure to caustic cleaners or road salt causes further surface degradation. The following procedure details how to strip, clean and recoat alloy wheels.

Caution: To avoid serious personal injury, follow the manufacturer's recommendations and cautions when using these materials.

Required materials

Amchem Alumi Prep No. 33 Stock No. DX533 or equivalent cleaning and conditioning chemical for alloys.

Amchem Alodine No. 1001 Stock No. DX50T or equivalent coating chemical for alloys.

Ditzler Delclear Acrylic Urethane Clear Stock No. DAU 75 or equivalent.

Ditzler Delthane UltraUrethane Additive Stock No. DXR 80 or equivalent.

Before repairing the alloy damage or the clear coat damage, prepare the wheels and tires.

1. Remove the wheel from the vehicle. Refer to „Wheel" in this section.
2. Mark the location of the outboard weights and remove them.
3. Wash the wheel inside and out with a water based all purpose cleaner. Remove the grease and oil with a solvent cleaner.
4. Mask the tire prior to painting.
5. Using a 400 grit wet or dry sandpaper, sand over the painted areas that will not require recoloring. Sanding will promote the adhesion of the clear coat.

Alloy Damage on Wheel Surface

1. Mount the wheel on a brake lathe and spin the assembly slowly.
2. Sand the wheel with a backing block or pad. Hold the backing block or pad flat to the surface of the wheel and sand slowly back and forth from the center to the outer edge of the tire to remove the damage. Use the following sandpaper grits in the order listed:
   - 80 grit.
   - 150 grit.
   - 240 grit.

Clear Coat Damage on Unpainted Wheels

1. Apply the chemical stripper Amchem Alumi Prep No. 33. Use a small 1/4 inch detail brush to apply the stripper around the perimeter and spoke like areas.
2. Remove the stripper according to manufacturer's recommendations.

Caution: To avoid serious personal injury, do not use engine power to rotate the wheel while sanding.

3. Sand the wheel with 240 grit sandpaper by rotating the wheel on a slow spinning brake lathe or by mounting the wheel on the car and spinning it by hand. Sanding restores the machined appearance and promotes adhesion.

After repairing the alloy or clear coat damage, the wheels must be recoated.

Recoating Procedure

Caution: To avoid serious personal injury when applying any two part component paint system, follow the specific precautions provided by the paint manufacturer. Failure to follow these precautions may cause lung irritation and allergic respiratory reaction.

1. Clean the surface.
2. Soak the wheel with Amchem Alumi Prep No. 33 or equivalent for 1 to 3 minutes. Rinse the wheel with water and blow dry.
3. Soak the wheel with Amchem Alodine No. 1001 or equivalent for 1 to 3 minutes. Rinse the wheel with water and blow dry.
4. Finish with Ditzler Delclear Urethane and Ditzler Ultra Urethane Additive or equivalent using three coats.
5. 1st coat spray on a light mist coat, let dry.
6. 2nd coat spray or paint on a light coat, let dry.
7. 3rd coat spray or paint on a heavy double wet coat, let dry.
8. Let the urethane dry for 24 hours or flash for 30 minutes and force dry at 60ºC (140ºF) for 30 minutes. Allow the urethane to cool for 5 minutes before mounting the wheel on the vehicle.

OFF VEHICLE BALANCING

Perform wheel balancing with an electronic off vehicle balancer. The balancer is easy to use and gives both a static and a dynamic balance. Unlike on vehicle balancing, the off vehicle balancer does not correct for drum or rotor imbalance. This drawback is overcome by its accuracy (usually to within 1/8 ounce). Secure the wheel on the balancer with a cone through the back side of the centerhole, not through the wheel bolt holes.

CORRECTING NON UNIFORM TIRES

There are two ways to correct properly balanced tires which still vibrate. One method uses an automatic machine which loads the tire and buffs small amounts of rubber from high spots on the outer two tread rows. Correction by this method is usually permanent and, if it is done properly, does not significantly affect the appearance or the tread life of the tire. Tire truing with a blade type machine is not recommended because it substantially reduces the tread life and often does not correct the problem permanently.

Another method is to dismount the tire and rotate it 180 degrees on the rim. Do this only on the tire and wheel assemblies which are known to be causing a vibration because this method is just as likely to cause good assemblies to vibrate.

TIRE AND WHEEL MATCH MOUNTING

The tires and wheels are match mounted at the assembly plant. Match mounting aligns the radially stiffest part of the tire, or high spot, to the smallest radius, or low spot, of the wheel.

The high spot of the tire is originally marked by a red paint mark or an adhesive label on the outboard sidewall.

The low spot of the wheel will be at the location of the valve stem.

Before dismounting a tire from its wheel, scribe a line on the tire at the valve stem to assure that it is remounted in the same position.

Replacement tires that are of original equipment quality will have their high and low spot marked in the same manner.

TIRE MOUNTING AND DISMOUNTING

Notice: Use a tire changing machine to mount or dismount the tires. Follow the equipment manufacturer's instructions. Do not use hand tools or tire irons to change tires. These tools may damage the beads or the wheel rim.

1. Clean the rim bead seats with a wire brush or coarse steel wool to remove lubricants, old rubber, and light rust. Before mounting or dismounting a tire, lubricate the bead area well with an approved tire lubricant.

Caution: To avoid serious injury, do not stand over the tire when inflating it, because the bead may break when it snaps over the safety hump. Do not exceed 275 kPa (40 psi) of air pressure in any tire if the beads are not seated. If 275 kPa (40 psi) of air pressure will not seat the beads, deflate the tire. Relubricate the bead and reinflate the tire. Overinflation may cause the bead to break and cause serious injury.

2. After mounting the tire, inflate it until the beads are seated. Never exceed 275 kPa (40 psi) to seat the beads.
3. Install the valve core and inflate the tire to the proper pressure. Make sure the locating ring outside of the bead of the tire shows around the rim flanges of the wheel on both sides. This positioning of the tire will insure that the bead of the tire is seated.

GENERAL DESCRIPTION AND SYSTEM OPERATION

TIRE AND WHEEL BALANCING

There are two types of tire and wheel balancing: static and dynamic.

Static balance is the equal distribution of weight around the wheel. Assemblies that are statically unbalanced cause a bouncing action called wheel tramp. This condition may eventually cause uneven tire wear.

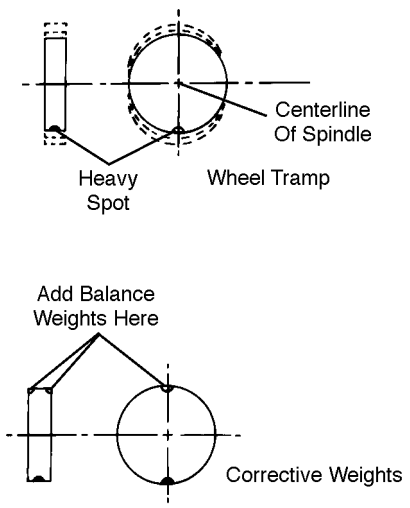

Dynamic balance is the equal distribution of weight on each side of the centerline so that when the assembly spins there is no tendency for it to move from side to side. Assemblies that are dynamically unbalanced may cause wheel shimmy.

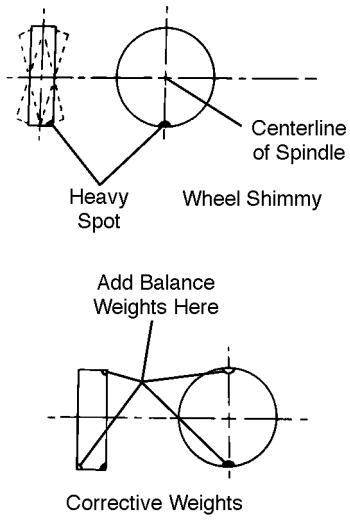

General Balance Precautions

Remove all deposits of foreign material from the inside of the wheel.

Caution: Remove stones from the tread in order to avoid operator injury during spin balancing.

Inspect the tire for any damage. Balance the tire according to the equipment manufacturer's recommendations.

Wheel Weights

If more than 85 grams (3.0 ounces) are needed to static balance the wheel, split the wheel weights as equally as possible between the inboard and the outboard flanges.

Balancing the assemblies with factory alloy wheels requires the use of special nylon coated, clip on wheel weights. These weights are designed to fit over the thicker rim flange of the alloy wheel. Install these weights with a plastic tipped hammer.

Adhesive wheel weights are also available. Use the following procedure to install adhesive wheel weights.

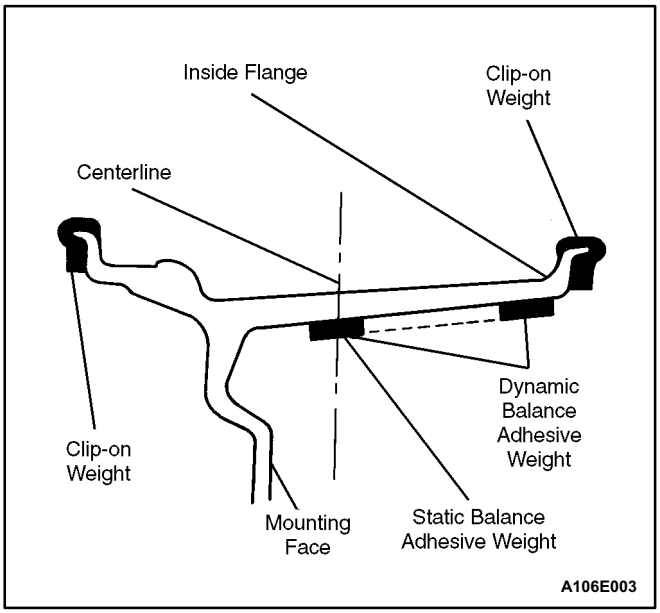

Adhesive Wheel Weight Installation

1. Clean the wheel by sanding it to bare alloy where the wheel weight will be installed.
2. Use a clean cloth or paper towel saturated with a mixture of half isopropyl alcohol and half water to wipe the place where the wheel weight will be installed.
3. Dry the area with hot air. The surface of the wheel should be warm to the touch.
4. Warm the adhesive backing on the wheel weights to room temperature.
5. Remove the tape from the back of the weights. Do not touch the adhesive surface.
6. Apply the the wheel weight and press it on with hand pressure.
7. Secure the wheel weight with a 70-110 N force applied with a roller.

TIRE CHAIN USAGE

Due to limited tire to body clearance on certain vehicles, recommendations for tire chain use are published in the Owner's Manual. When tire chains need to be used, most current Daewoo vehicles require SAE Class „S" tire chains. These may also be designated as 1100 Series, type PL tire chains. These chains are specifically designed to limit the „fly off" effect which occurs when the wheel rotates.

Be sure that only fine link chains are used which do not add more than 15 mm (0.590 inch), including the lock, to the tread surface and the inner sides of the tires. Manufacturers of tire chains have a specific chain size for each tire size to ensure a proper fit when the chain is installed. Be sure to purchase the correct chains for the tires on which they are to be used. Use rubber adjusters to take up any slack or clearance in loose chains.

Use of chains may adversely affect vehicle handling.

When tire chains are installed, follow these precautions:

- Adjust speed to road conditions.
- Avoid sharp turns.
- Avoid locked wheel braking.

To prevent chain damage to the vehicle, install the chains on the front tires as tightly as possible. Tighten them again after driving 0.4 to 0.8 kilometer (0.3 to 0.5 mile). The use of chains on the rear tires is not recommended because they may contact the vehicle and possibly damage it. If chains must be used on the rear tires, be sure there is sufficient clearance between the chains and the body. Do not exceed 70 km/h (45 mph) or the chain manufacturer's speed limit, if lower. Avoid large bumps, potholes, severe turns and any other maneuvers which could cause the tires to bounce. Follow any other instructions of the chain manufacturer which do not disagree with the above instructions.

REPLACEMENT TIRES

A Tire Performance Criteria (TPC) specification number is molded in the sidewall near the tire size of all original equipment tires. This specification number assures that the tire meets performance standards for traction, endurance, dimensions, noise, handling and rolling resistance. Usually a specific TPC number is assigned to each tire size.

Caution: Do not mix different types of tires on the same vehicle such as radial, bias and bias belted tires except in emergencies, because vehicle handling may be seriously affected and may result in loss of control.

Use only replacement tires with the same size, load range, and construction as the original. The use of any other tire size or construction type may seriously affect ride, handling, speedometer/odometer calibration, vehicle ground clearance, and tire clearance to the body and the chassis. This does not apply to the spare tire furnished with the vehicle.

It is recommended that new tires be installed in pairs on the same axle.

If it is necessary to replace only one tire, pair it with the tire having the most tread to equalize the braking action.

Although they may appear different in tread design, tires built by different manufacturers with identical TPC specifications may be used on the same vehicle.

ALL SEASON TIRES

Most vehicles are now equipped with steel belted all season radial tires as standard equipment. These tires qualify as snow tires, with a 37 percent higher average rating for snow traction than the non all season radial tires previously used. Other performance areas, such as wet traction, rolling resistance, tread life, and air retention, have also been improved. This was done by improvements in both tread design and tread compounds. These tires are identified by an „M + S" molded in the tire sidewall following the size number. The suffix „MS" is also molded in the sidewall after the TPC specification number.

The optional handling tires used on some vehicles are not all season tires. These will not have the „MS" marking after the tire size or the TPC specification number.

PASSENGER METRIC SIZED TIRES

All Daewoo vehicles now use Passenger (P) metric sized tires. P metric tires are available in two load ranges: standard load (35 psi maximum) and extra load (41 psi maximum). Most passenger vehicle tires are standard load.

Most P metric tire sizes do not have exact corresponding alphanumeric tire sizes. For example, a P175/70R13 is not exactly equal in size and load carrying capacity to an FR70 13. For this reason, replacement tires should be of the same TPC specification number as the originals. If P metric tires must be replaced with other sizes, consult a tire dealer. Tire companies can best recommend the closest match of alphanumeric to P metric sizes within their own tire lines.

The metric term for measuring tire inflation pressure is the kilopascal (kPa). Tire pressure may be printed in both kPa and psi. One psi equals 6.895 kPa.

See the tire label or refer to „Tire Size and Pressure Specifications" in this section for tire inflation pressures.

TIRE LABEL

The tire label is permanently located on the rear face of the driver's door and should be referred to for tire information. It lists the maximum vehicle load, the tire size (including the spare tire), and the cold inflation pressure (including the spare tire).

SPARE TIRE

This vehicle comes equipped with a full sized spare tire and wheel.

WHEELS

Wheels must be replaced if they are bent, dented, have excessive lateral or radial runout, leak air through welds, have elongated bolt holes, or if the wheel nuts won't stay tight or are heavily rusted. Wheels with excessive runout may cause vehicle vibration. Replacement wheels must be equivalent to the original equipment wheels in load capacity, diameter, rim width, offset, and mounting configuration. A wheel of improper size or type may affect wheel and bearing life, brake cooling, speedometer/odometer calibration, vehicle ground clearance, and tire clearance to the body and the chassis. The wheel offset is 49 ± 1 mm (1.93 ± 0.04 inches). Steel wheels may be identified by a two or three letter code stamped into the rim near the valve stem. Alloy wheels should have the code, the part number, and the manufacturer ID cast into the back side.

INFLATION OF TIRES

The pressure recommended for any vehicle line is carefully calculated to give a satisfactory ride, handling, tread life, and load carrying capacity.

Tire pressure should be checked monthly or before any extended trip. Check the tires when they are cold, after the vehicle has sat for 3 hours or more or has been driven less than 1 mile. Set the tire pressure to the specifications on the tire label located on the rear face of the driver's door. Tire inflation pressure is also given under „Tire Size and Pressure Specifications" in this section.

Valve caps or extensions should be on the valves to keep dust and water out.

For sustained driving at speeds up to 140 km/h (85 mph), inflate the tires to the pressure recommended on the tire. Sustained driving at speeds faster than 140 km/h (85 mph), even if permitted by law, is not advised unless the vehicle has special high speed tires available from many tire dealers. Tire pressures may increase as much as 41 kPa (6 psi) when the tires are hot.

Higher than recommended tire pressure can cause

- Hard ride
- Tire bruising or damage
- Rapid tread wear at the center of the tire

Lower than recommended pressure can cause

- Tire squeal on turns
- Hard steering
- Rapid and uneven wear on the edges of the tread
- Tire rim bruises and rupture
- Tire cord breakage
- High tire temperatures

Unequal tire pressures on same axle can cause

- Uneven braking
- Steering lead
- Reduced handling
- Swerve on acceleration
- Torque steer

DRIVELINE/AXLE

CONTENTS

SECTION 3A AUTOMATIC TRANSAXLE DRIVE AXLE

SECTION 3B MANUAL TRANSAXLE DRIVE AXLE

SECTION 3A

AUTOMATIC TRANSAXLE DRIVE AXLE

TABLE OF CONTENTS

Specifications **3A-1**
Fastener Tightening Specifications 3A-1
Special Tools **3A-2**
Special Tools Table 3A-2
Component Locator **3A-2**
Front Drive Axle 3A-2
Maintenance and Repair **3A-4**
On-Vehicle Service 3A-4
Drive Axle Assembly 3A-4
Unit Repair 3A-8
Outer Joint Seal 3A-8
Inner Tripot Seal 3A-9
General Description and System Operation **3A-13**
Front Drive Axle 3A-13

SPECIFICATIONS

FASTENER TIGHTENING SPECIFICATIONS

Application	N•m	Lb•Ft	Lb•In
Axle Shaft Caulking Nut Initial Torque	180	133	-
Axle Shaft Caulking Nut Final Torque	50 + 60°	37 + 60°	-
Lower Ball Joint Nut and Bolt	90	66	-
Tie Rod Nut	60	44	-
Wheel Bolts	90	66	-

SPECIAL TOOLS

SPECIAL TOOLS TABLE

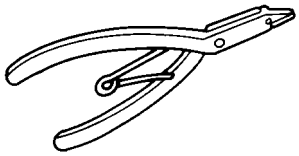 A104A001	**J-8059** **Snap Ring Pliers**
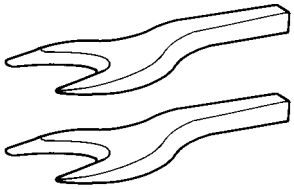 A106C032	**KM-460-A** **Axle Shaft Remover**
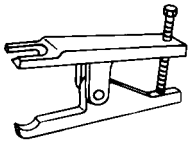 C106C034	**KM-333** **Ball Joint Separator**
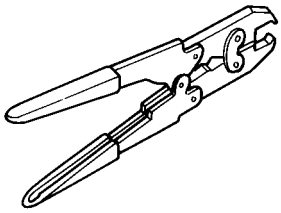 A104A008	**J-35566** **Seal Clamp Pliers**

COMPONENT LOCATOR

FRONT DRIVE AXLE

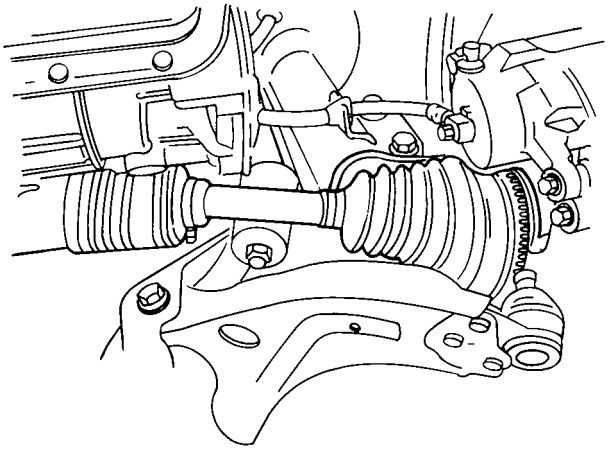

C104A002

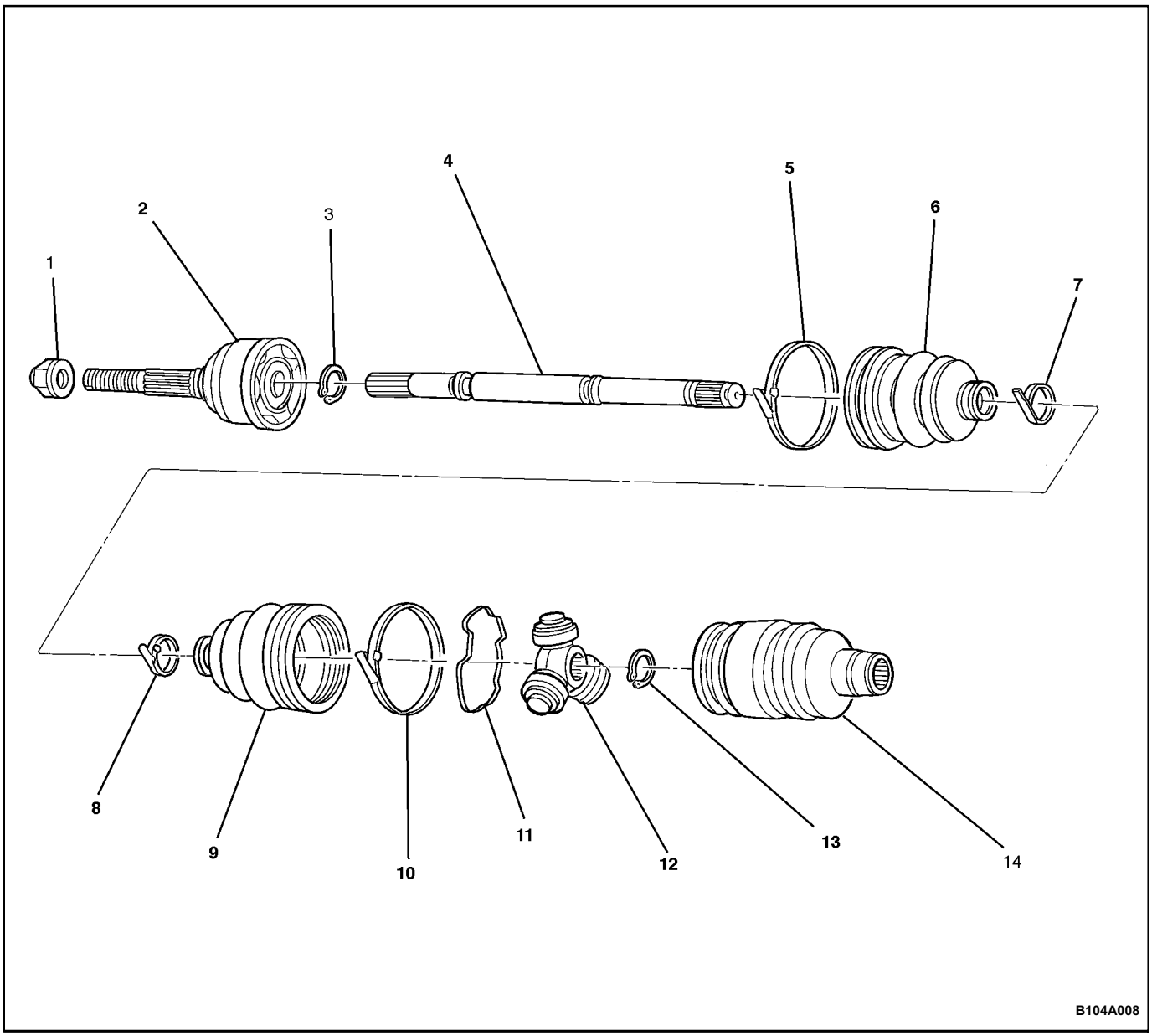

1 Caulking Nut
2 C/V Joint
3 Snap Ring
4 Axle Shaft (right-hand shown, left-hand similar)
5 Seal Retaining Clamp
6 Drive Axle Outboard Seal
7 Seal Retaining Clamp
8 Seal Retaining Clamp
9 Drive Axle Inboard Seal
10 Seal Retaining Clamp
11 Tripot Joint Retaining Ring
12 Tripot Joint
13 Shaft Retaining Ring
14 Tripot Housing

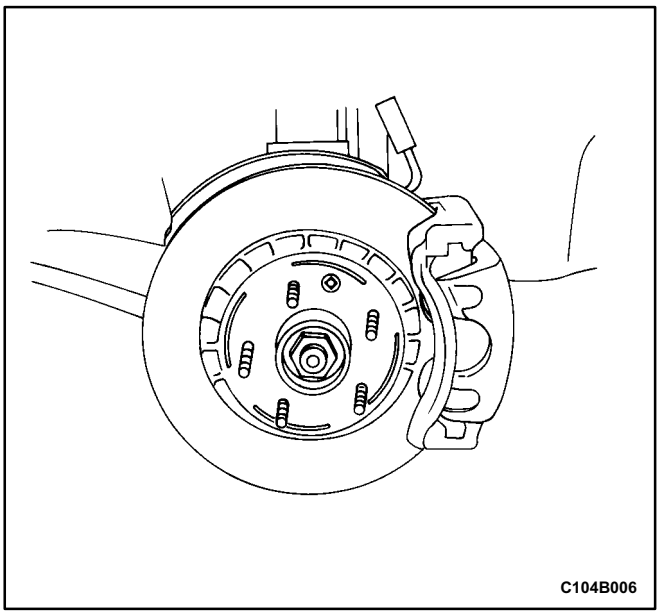

MAINTENANCE AND REPAIR

ON-VEHICLE SERVICE

DRIVE AXLE ASSEMBLY

Tools Required

KM-333 Ball Joint Separator

KM-460-A Axle Shaft Remover

Removal Procedure

1. Raise and suitably support the vehicle.
2. Remove the wheels. Refer to *Section 2E, Tires and Wheels*.
3. Remove the engine under covers. Refer to *Section 9N, Frame and Underbody.*
4. Remove the axle shaft caulking nut. Discard the nut.
5. Remove the lower ball joint nut and bolt.

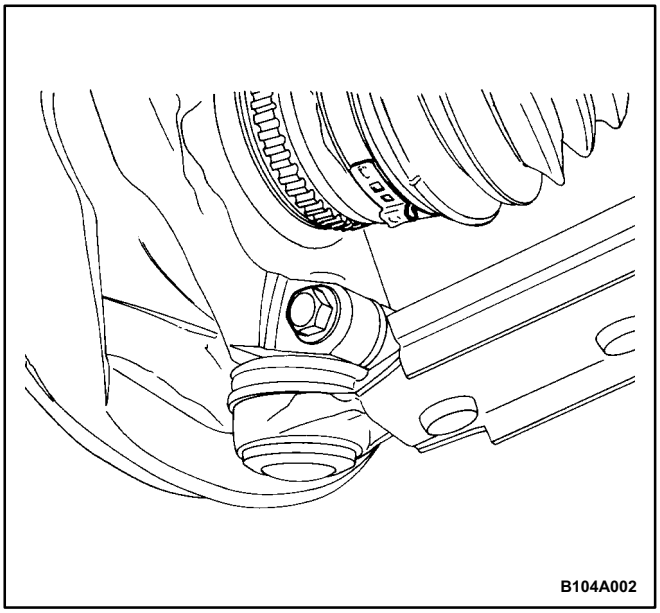

Notice: Use only the recommended tool for separating the lower ball joint. Failure to use the recommended tool may cause damage to the ball joint and the seal.

6. Separate the steering knuckle from the lower ball joint using the ball joint separator KM-333.

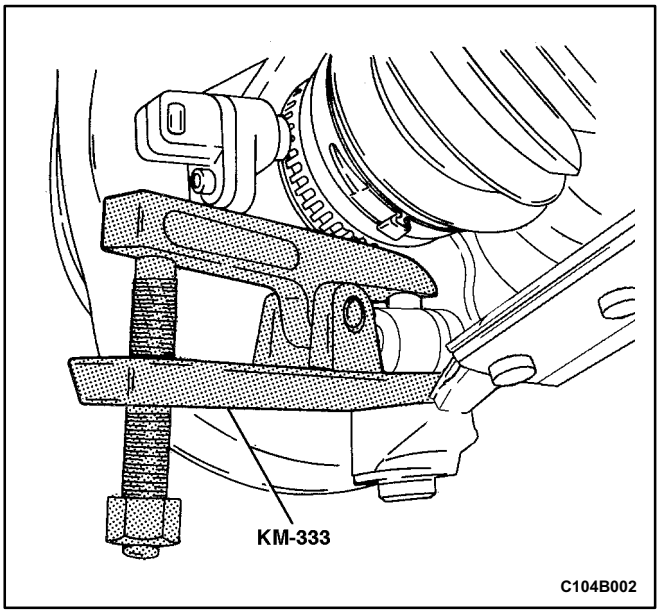

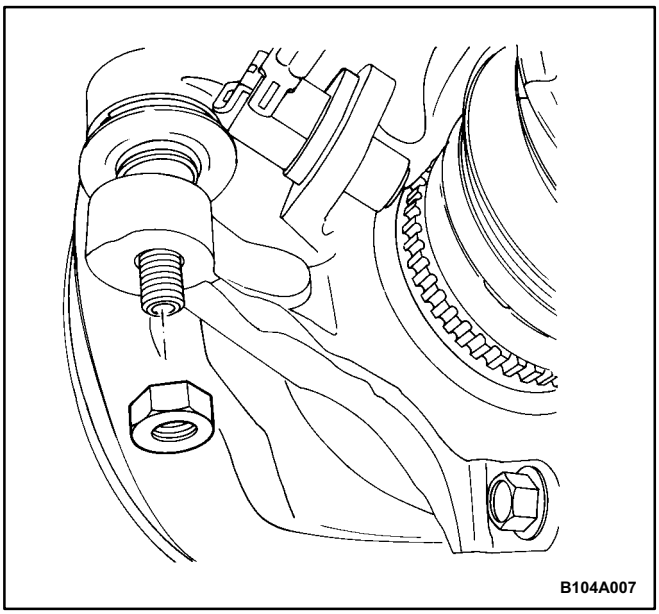

7. Remove the tie rod nut.

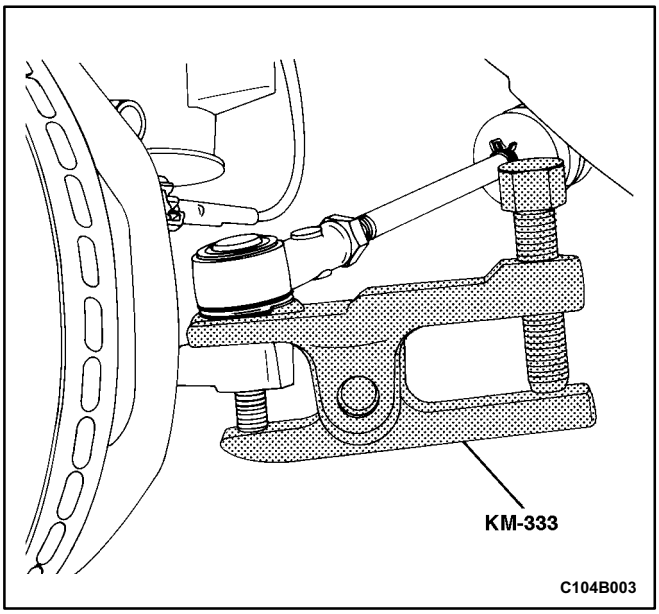

Notice: Use only the recommended tool for separating the tie rod from the knuckle/strut assembly. Failure to use the recommended tool may cause damage to the knuckle/strut assembly.

8. Separate the tie rod end using the ball joint separator KM-333.

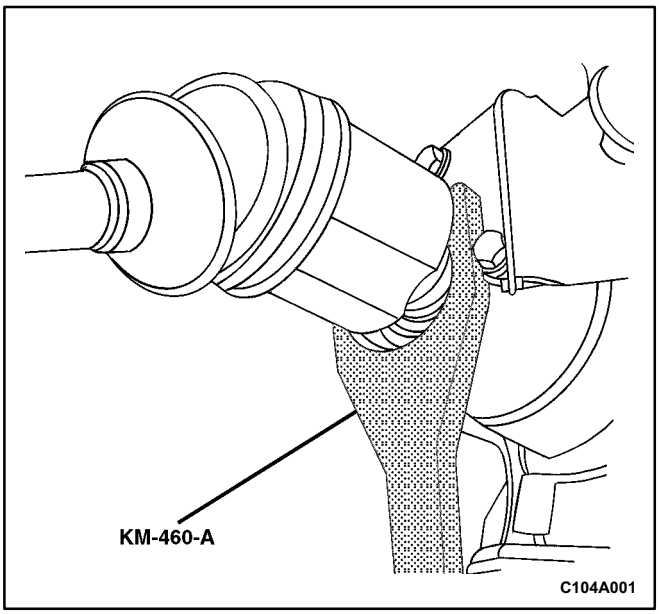

9. Push the drive axle shaft from the wheel hub.

Important: Support the unfastened end of the drive axle. Do not allow the drive axle to dangle freely from the transaxle for any length of time after it has been removed from the wheel hub.

Important: Place a drain pan below the transaxle to catch the escaping fluid. Cap the transaxle drive opening after the drive axle has been removed to keep the fluid in and any contamination out.

10. Remove the drive axle from the transaxle using the axle shaft remover KM-460-A.

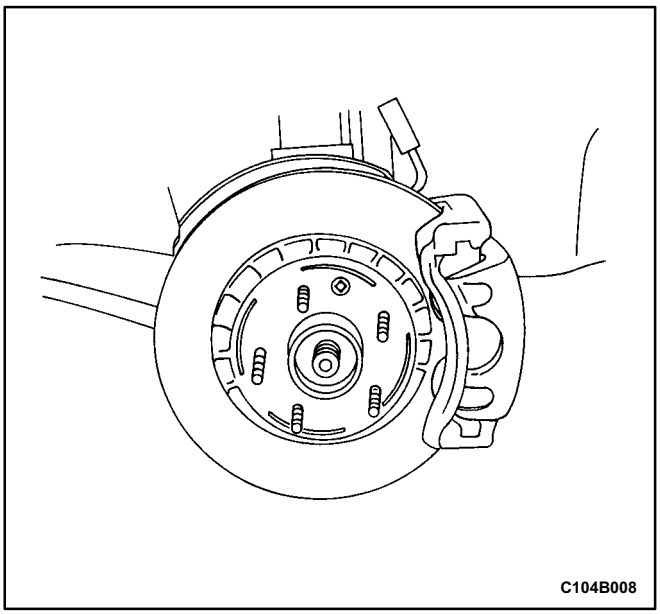

Installation Procedure

Notice: Do not damage the seals.

1. Clean the hub seal and the transaxle seal.
2. Install the drive axle into the transaxle.
3. Install the wheel hub onto the axle shaft.

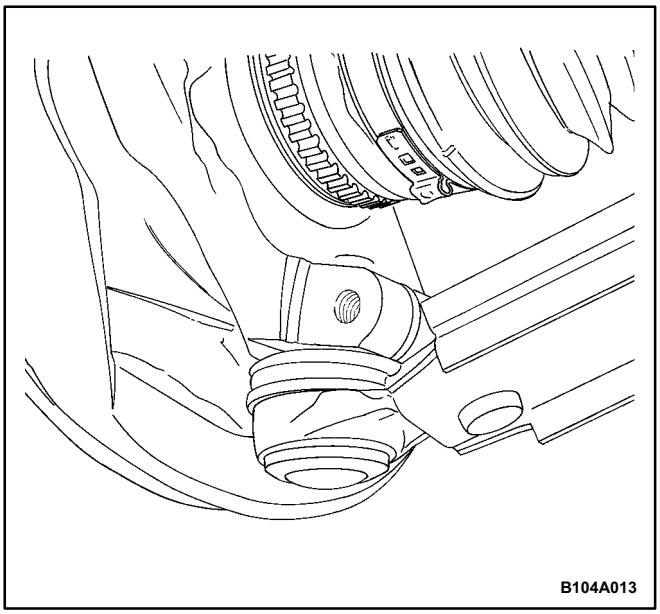

4. Mount the steering knuckle onto the lower ball joint.

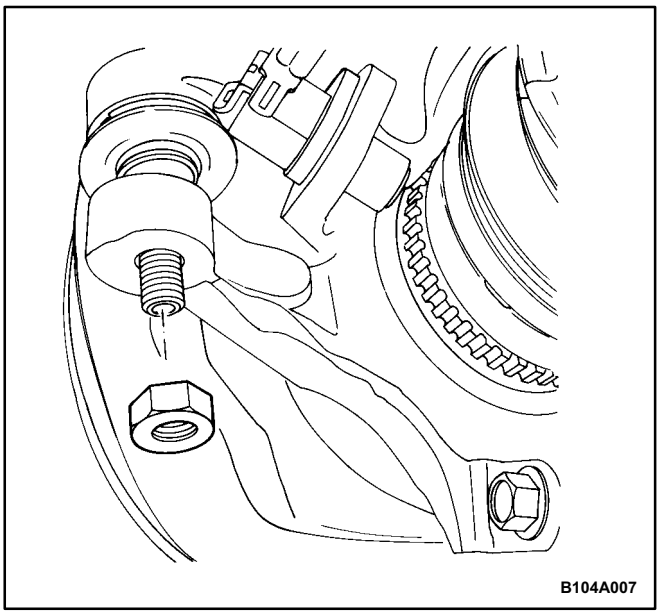

5. Install the tie rod into the knuckle/strut and install the tie rod nut.

   Tighten

   Tighten the tie rod nut to 60 N•m (44 lb•ft).

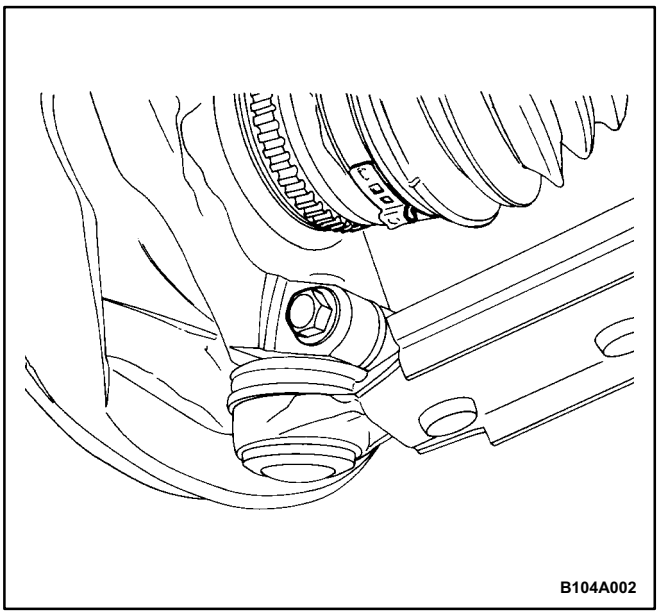

6. Install the lower ball joint bolt and nut.

Tighten

Tighten the lower ball joint bolt and nut to 90 N•m (66 lb•ft).

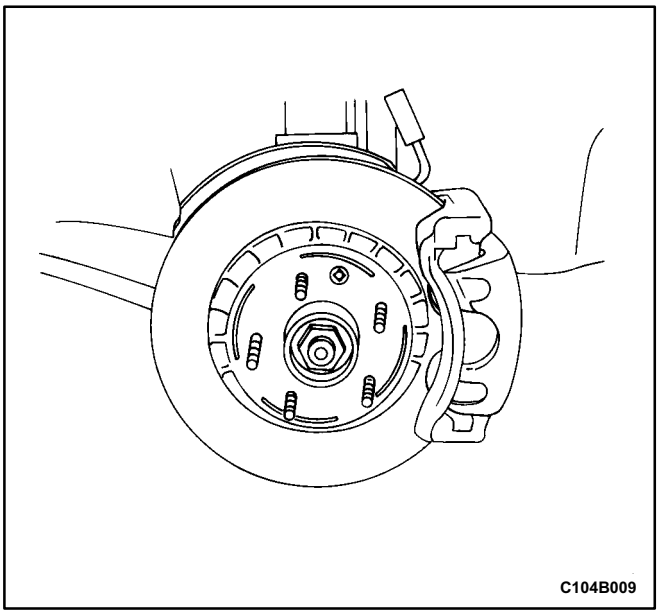

7. Loosely install a new axle shaft caulking nut. Always use a new nut.
8. Install the wheels. Loosely install the bolts. Refer to *Section 2E, Tires and Wheels*.

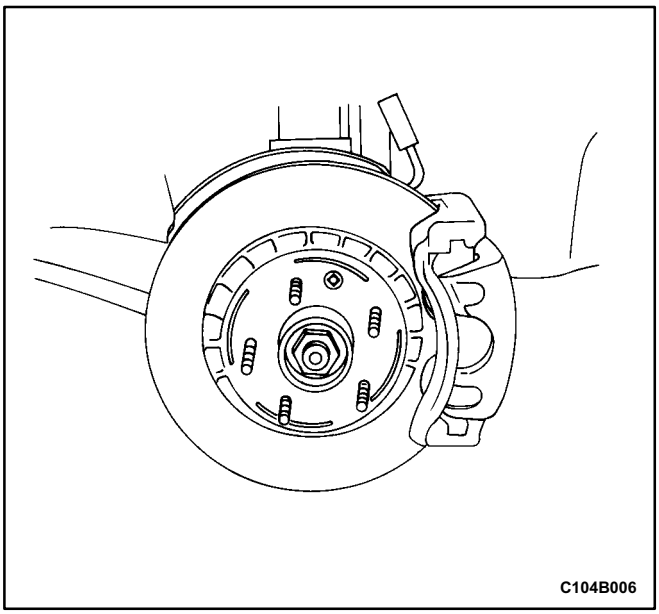

9. Lower the vehicle to the floor.

Tighten

Tighten the wheel bolts to 90 N•m (66 lb•ft).

Tighten the axle shaft caulking nut to 180 N•m (133 lb•ft). Loosen the nut and retighten the nut to 50 N•m (37 lb•ft). Then tighten the nut further by 60 degrees.

10. Peen the caulking nut with a punch and a hammer until the nut is locked into place on the axle shaft hub.
11. Install the engine under covers. Refer to *Section 9N, Frame and Underbody.*
12. Refill the transaxle fluid to the proper level. Refer to *Section 5A, 4T40E Automatic Transaxle.*

UNIT REPAIR

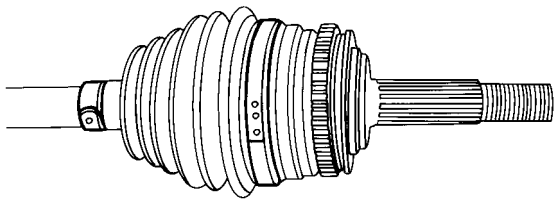
A104A020

OUTER JOINT SEAL

Tools Required

J-8059 Snap Ring Pliers

J-35566 Seal Clamp Pliers

Removal Procedure

1. Remove the drive axle from the vehicle. Refer to "Drive Axle Assembly" in this section.
2. Remove the large seal retaining clamp. Discard the clamp.
3. Remove the small seal retaining clamp. Discard the clamp.

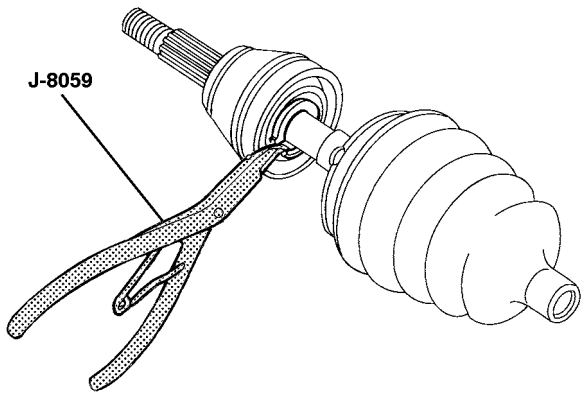

B104A009

4. Degrease the joint.
5. Spread the snap ring using the snap ring pliers J-8059 and remove the outer joint from the axle shaft.

Caution: Do not disassemble the outer joint assembly. Parts are match fit and cannot be serviced separately. Improper reassembly will adversely affect both performance and safety.

6. Remove the seal from the joint assembly.

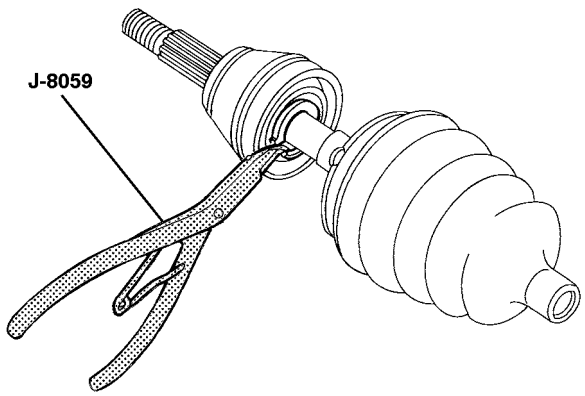

B104A009

Installation Procedure

1. Install the seal onto the axle shaft.
2. Spread the snap ring using the snap ring pliers J8059 and install the outer joint onto the axle shaft.
3. Fill the joint seal with 175 to 195g (6.2 to 6.9 ounces) of the recommended grease. Repack the joint with 175 to 195g (6.2 to 6.9 ounces) of the recommended grease.

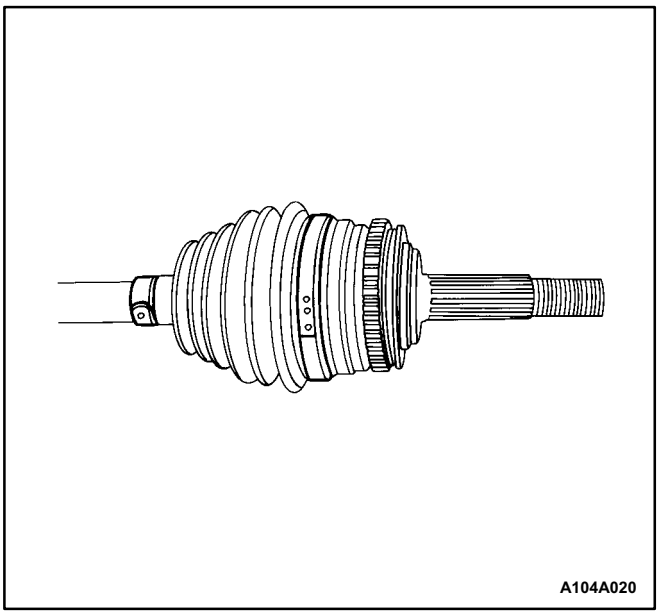

4. Install a new large seal retaining clamp and a new small seal retaining clamp.

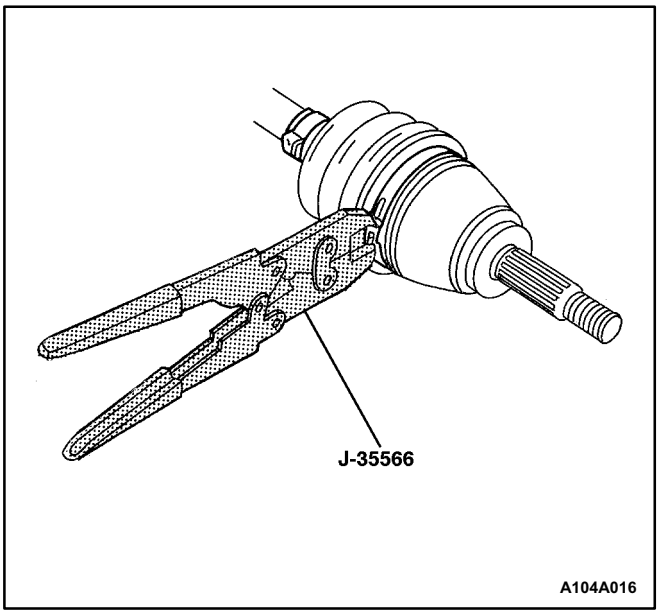

5. Crimp the new small seal retaining clamp and the new large seal retaining clamp using the seal clamp pliers J-35566.
6. Install the drive axle shaft to the vehicle. Refer to ``Drive Axle Assembly'' in this section.

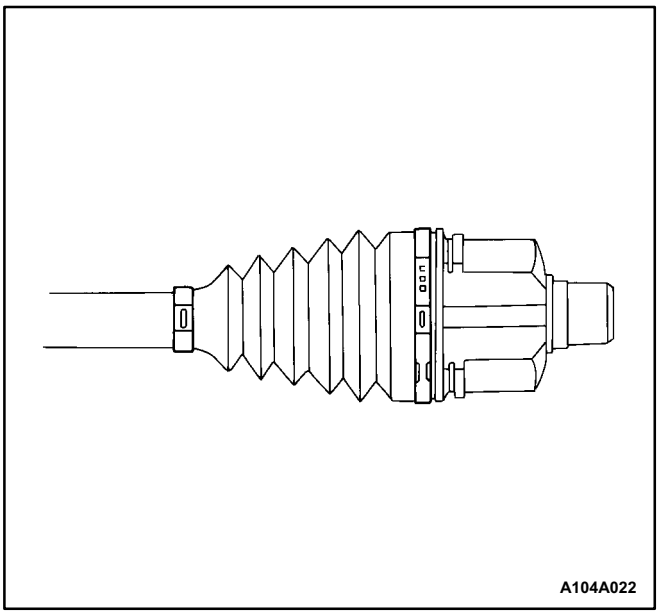

INNER TRIPOT SEAL

Tools Required

J-8059 Snap Ring Pliers

J-35566 Seal Clamp Pliers

Removal Procedure

1. Remove the drive axle from the vehicle. Refer to "Drive Axle Assembly" in this section.
2. Remove the large seal retaining clamp. Discard the clamp.
3. Remove the small seal retaining clamp. Discard the clamp.

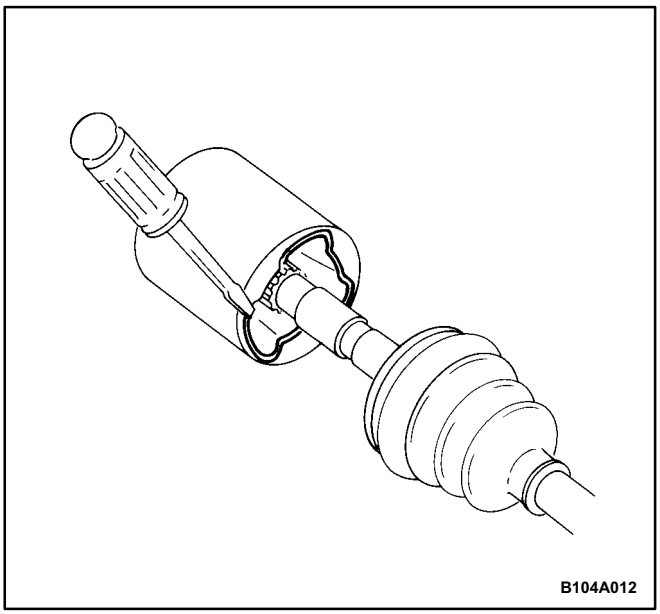

4. Pry the tripot joint retaining ring from the tripot housing.

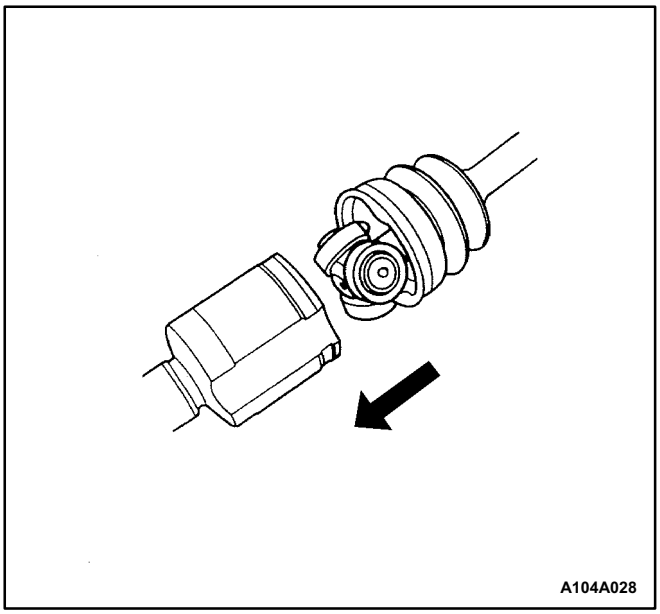

5. Remove the tripot housing from the seal.

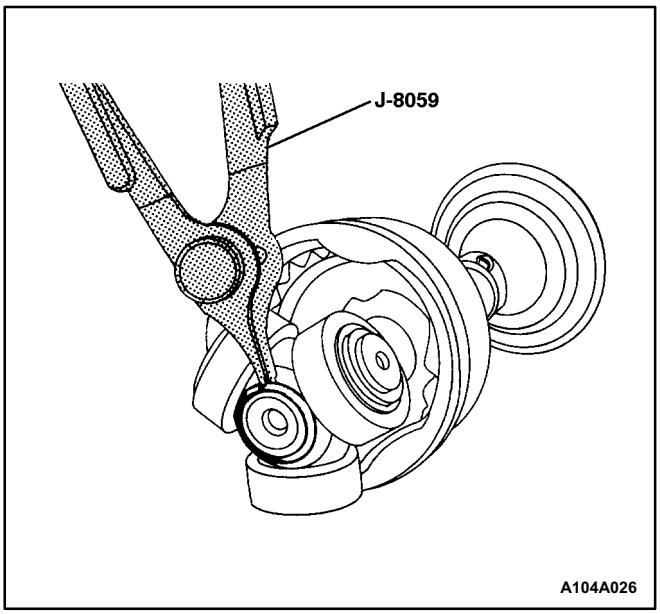

6. Degrease the tripot assembly.
7. Remove the shaft retaining ring using the snap ring pliers J-8059.

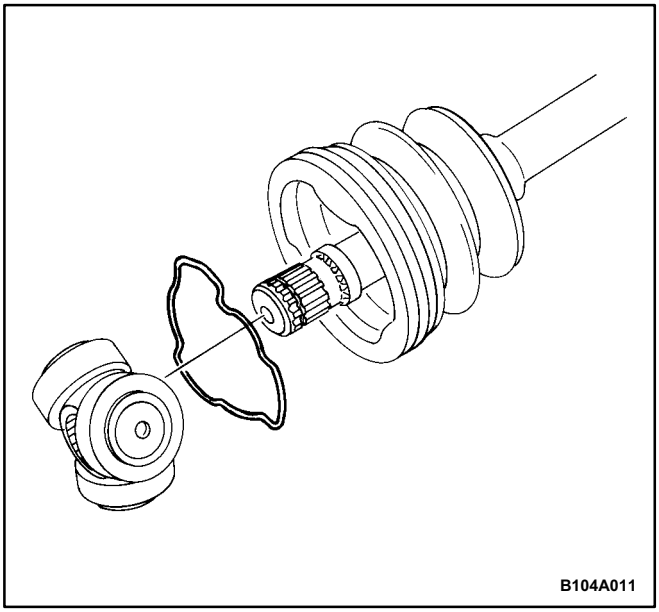

8. Remove the tripot and the tripot joint retaining ring from the axle shaft.
9. Remove the tripot joint seal from the axle shaft.

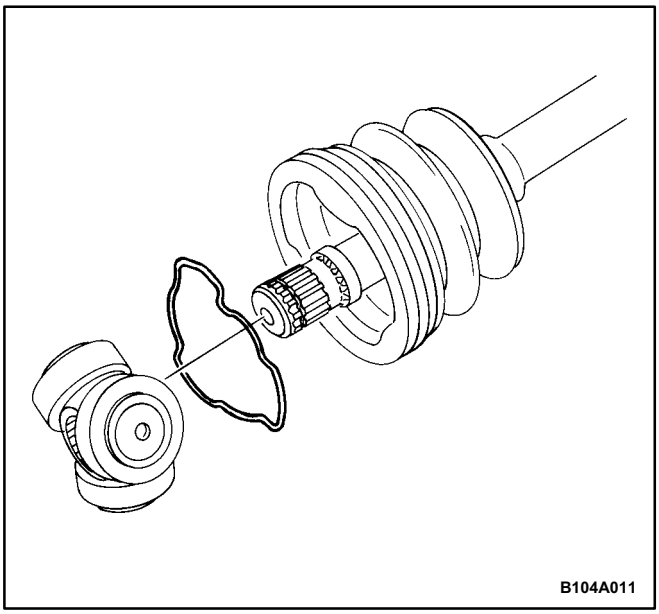

Installation Procedure

1. Install a new small seal retaining clamp onto the seal. Do not crimp the seal retaining clamp.
2. Install the seal onto the axle shaft.
3. Install the tripot joint retaining ring and the tripot onto the axle shaft.

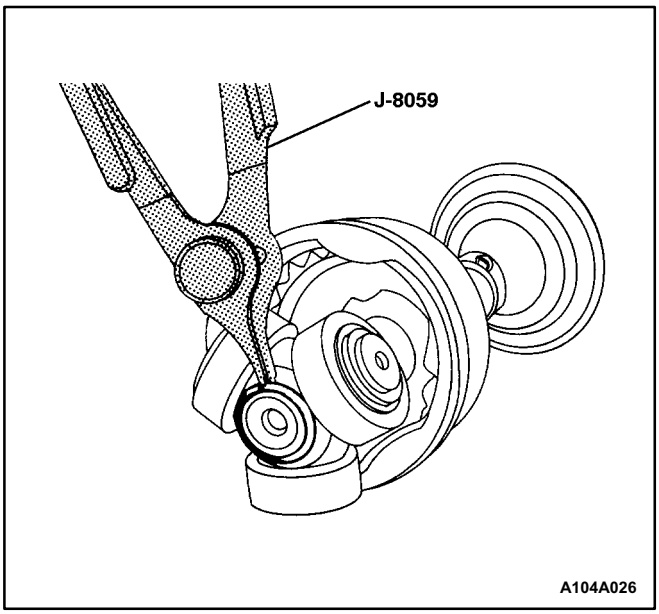

4. Install the shaft retaining ring onto the axle shaft using the snap ring pliers J-8059.

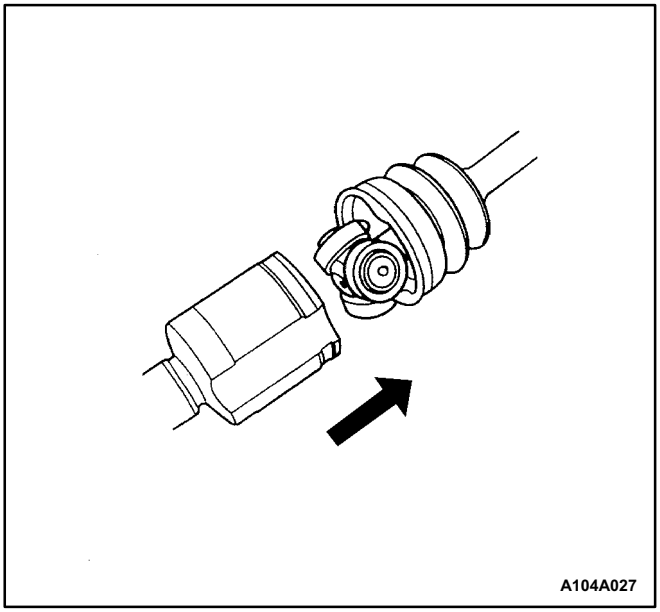

5. Fill the tripot housing with 195 to 215 g (6.9 to 7.6 ounces) of the recommended grease. Repack the tripot with 195 to 215 g (6.9 to 7.6 ounces) of the recommended grease.
6. Install the tripot housing onto the tripot assembly.

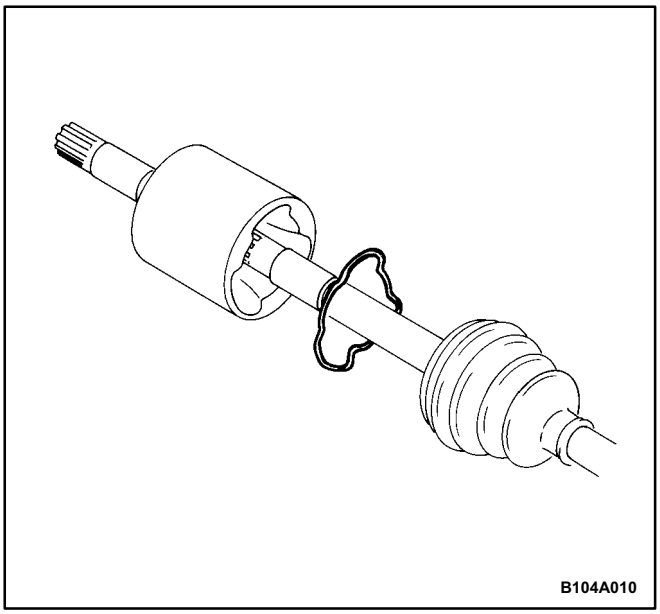

7. Install the tripot joint retaining ring into the tripot housing.

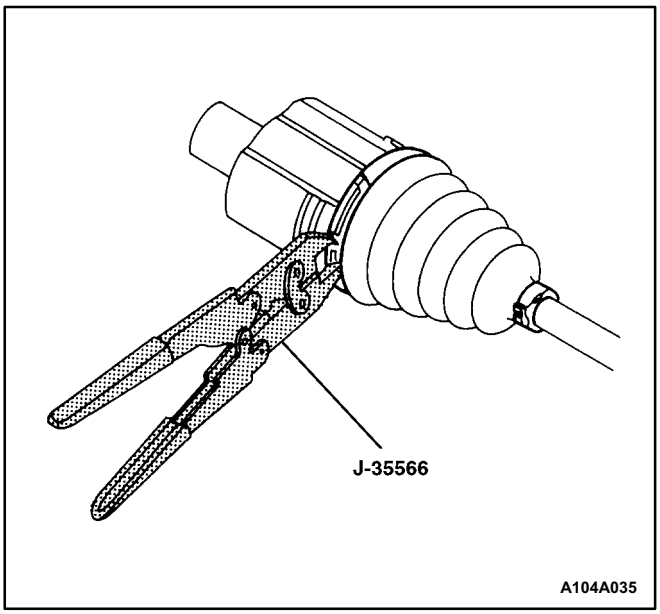

8. Install a new large seal retaining clamp. Crimp the large seal retaining clamp using the seal clamp pliers J-35566.
9. Crimp the new small seal retaining clamp using the seal clamp pliers J-35566.
10. Install the drive axle shaft to the vehicle. Refer to ``Drive Axle Assembly'' in this section.

GENERAL DESCRIPTION AND SYSTEM OPERATION

FRONT DRIVE AXLE

General Description

Drive axles are flexible shaft assemblies that transmit rotational force from the transaxle to the front-wheel assemblies. Each axle assembly consists of an inner and an outer constant velocity joint connected to an axle shaft. The inner joint is completely flexible and has the ability to move in and out. The outer joint is also flexible, but it cannot move in and out.

The drive axles use one type of outboard joint and one type of inboard joint. The inboard ends of both drive axles incorporate a female spline that installs over a stub shaft protruding from the transaxle.

SECTION 3B

MANUAL TRANSAXLE DRIVE AXLE

TABLE OF CONTENTS

Specifications **3B-1**
Fastener Tightening Specifications 3B-1
Special Tools **3B-2**
Special Tools Table 3B-2
Component Locator **3B-2**
Front Drive Axle 3B-2
Maintenance and Repair **3B-4**
On-Vehicle Service 3B-4
Drive Axle Assembly 3B-4
Unit Repair 3B-8
Outer Joint Seal 3B-8
Inner Tripot Seal 3B-9
General Description and System Operation **3B-13**
Front Drive Axle 3B-13

SPECIFICATIONS

FASTENER TIGHTENING SPECIFICATIONS

Application	N•m	Lb•Ft	Lb•In
Axle Shaft Caulking Nut Initial Torque	180	133	-
Axle Shaft Caulking Nut Final Torque	50 + 60°	37 + 60°	-
Lower Ball Joint Nut and Bolt	90	66	-
Tie Rod Nut	60	44	-
Wheel Bolts	90	66	-

SPECIAL TOOLS

SPECIAL TOOLS TABLE

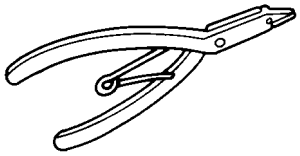 A104A001	**J-8059** **Snap Ring Pliers**
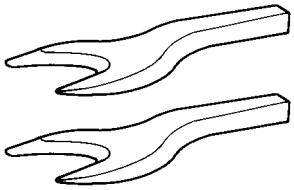 A106C032	**KM-460-A** **Axle Shaft Remover**
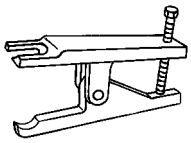 C106C034	**KM-333** **Ball Joint Separator**
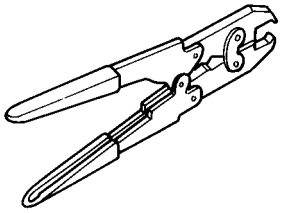 A104A008	**J-35566** **Seal Clamp Pliers**

COMPONENT LOCATOR

FRONT DRIVE AXLE

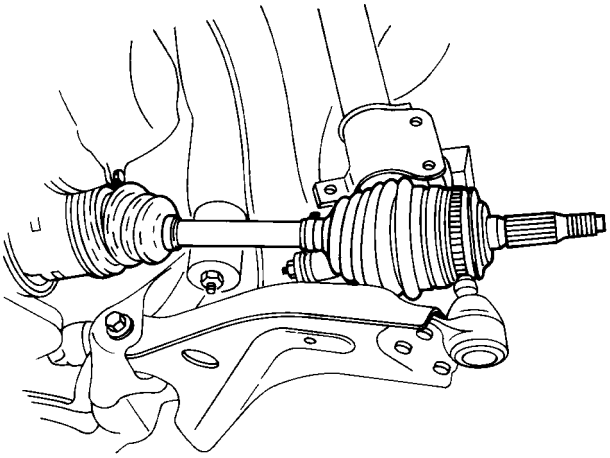

C104B001

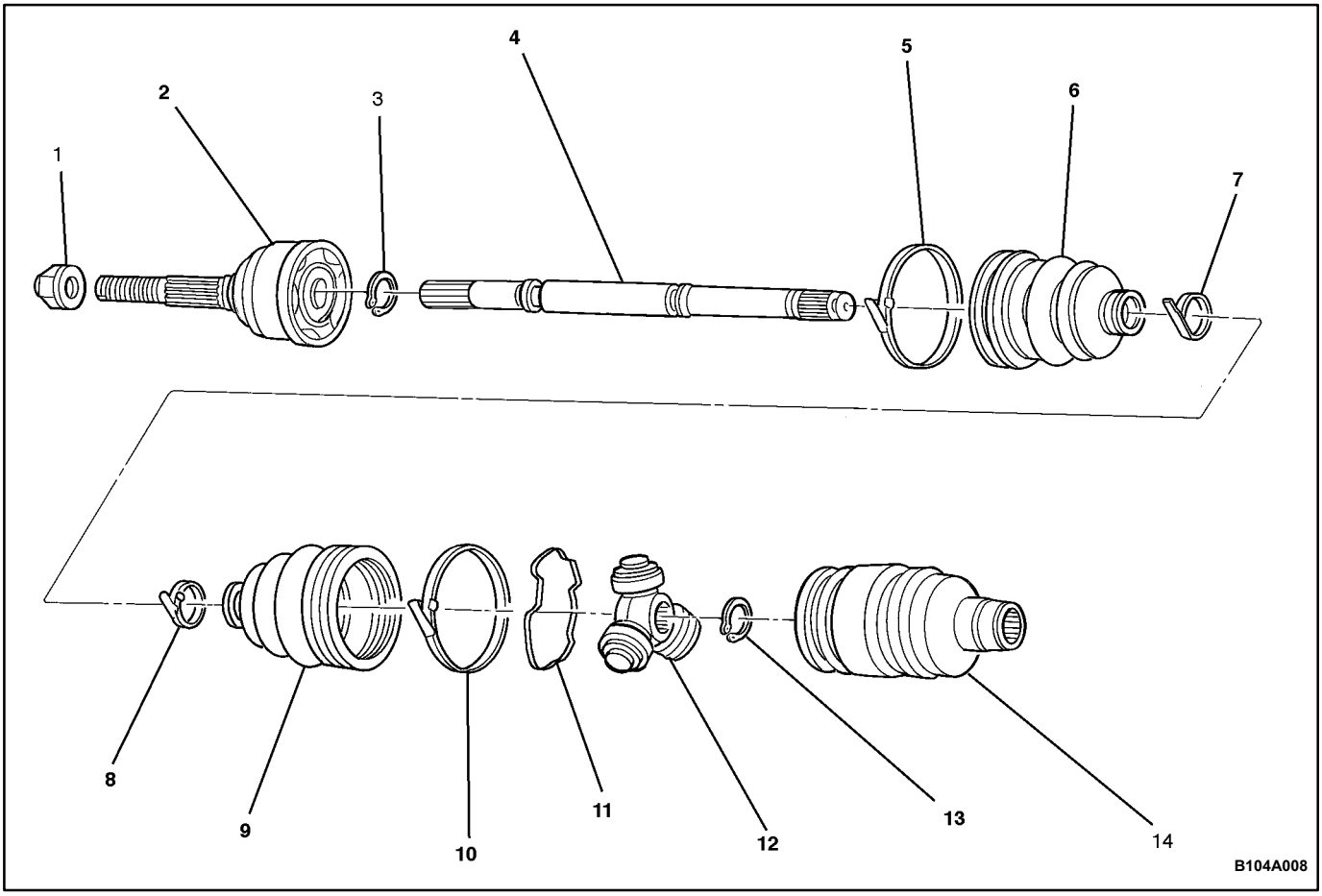

1 Caulking Nut
2 C/V Joint
3 Snap Ring
4 Axle Shaft (righthand shown, lefthand similar)
5 Seal Retaining Clamp
6 Drive Axle Outboard Seal
7 Seal Retaining Clamp
8 Seal Retaining Clamp
9 Drive Axle Inboard Seal
10 Seal Retaining Clamp
11 Tripot Joint Retaining Ring
12 Tripot Joint
13 Shaft Retaining Ring
14 Tripot Housing

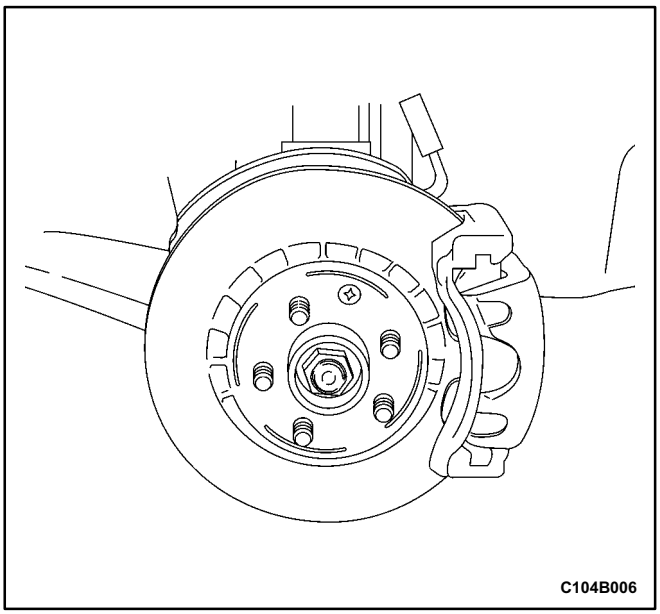

MAINTENANCE AND REPAIR

ON-VEHICLE SERVICE

DRIVE AXLE ASSEMBLY

Tools Required

KM-333 Ball Joint Separator
KM-460-A Axle Shaft Remover

Removal Procedure

1. Raise and suitably support the vehicle.
2. Remove the wheels. Refer to *Section 2E, Tires and Wheels*.
3. Remove the engine under covers. Refer to *Section 9N, Frame and Underbody*.
4. Remove the axle shaft caulking nut. Discard the nut.
5. Remove the lower ball joint nut and bolt.

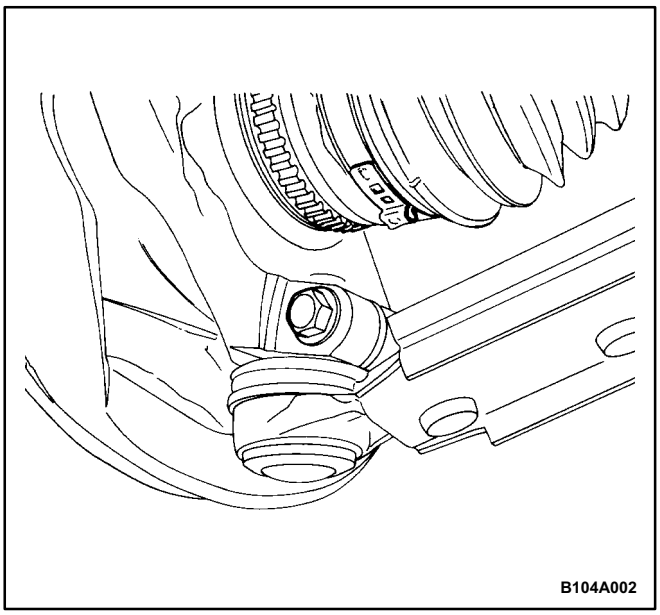

Notice: Use only the recommended tool for separating the lower ball joint. Failure to use the recommended tool may damage the ball joint and the seal.

6. Separate the steering knuckle from the lower ball joint using the ball joint separator KM-333.

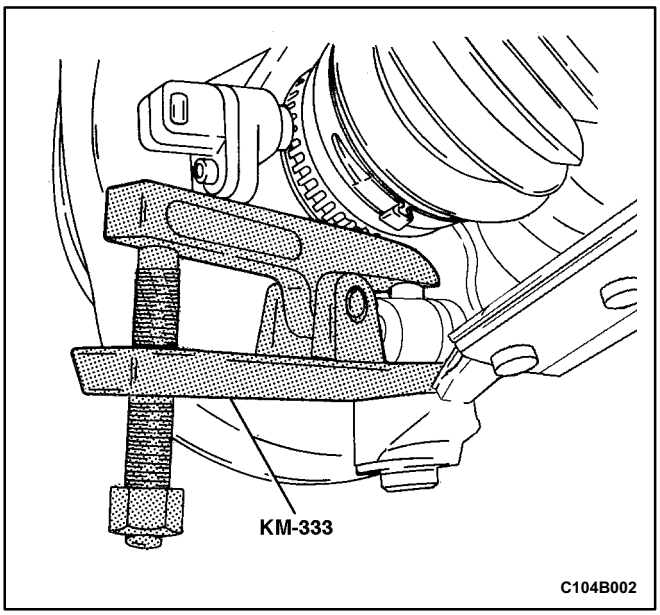

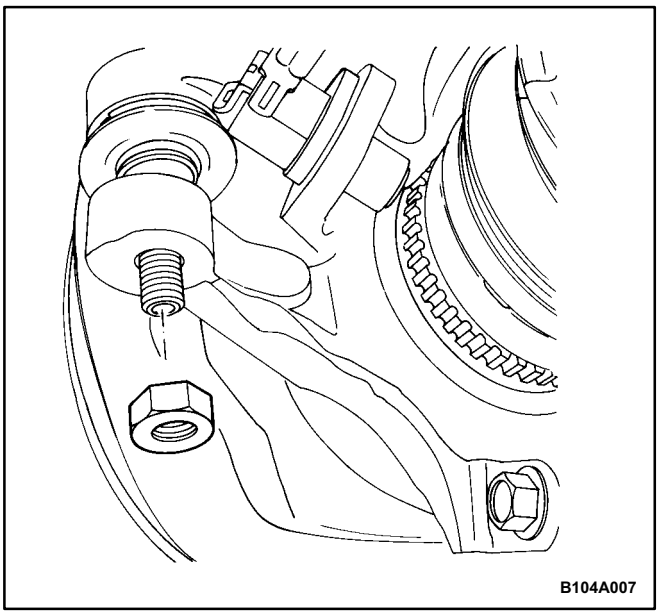

7. Remove the tie rod nut.

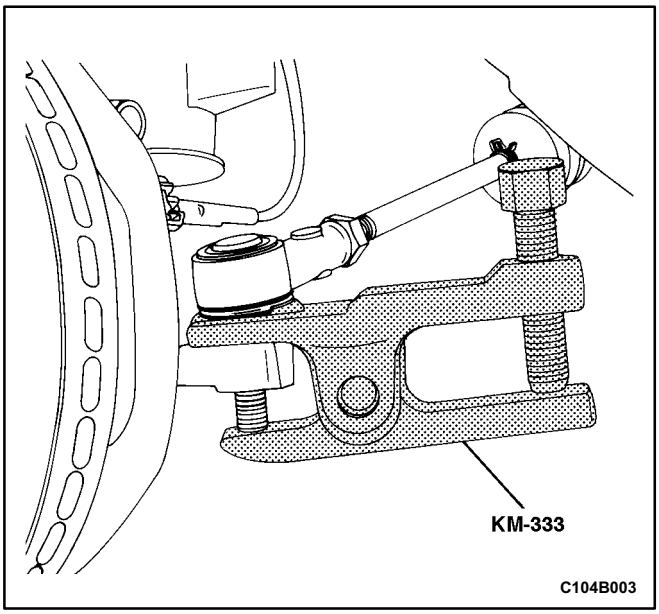

Notice: Use only the recommended tool for separating the tie rod from the knuckle/strut assembly. Failure to use the recommended tool may damage the knuckle/strut assembly.

8. Separate the tie rod end using the ball joint separator KM-333.

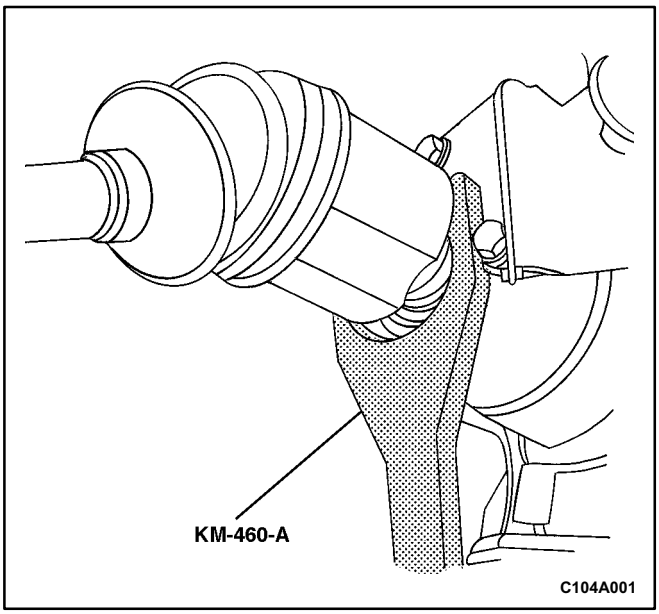

9. Push the drive axle shaft from the wheel hub.

Important: Support the unfastened end of the drive axle. Do not allow the drive axle to dangle freely from the transaxle for any length of time after it has been removed from the wheel hub.

Important: Place a drain pan below the transaxle to catch the escaping fluid. Cap the transaxle drive opening after the drive axle has been removed to keep the fluid in and any contamination out.

10. Remove the drive axle from the transaxle using the axle shaft remover KM-460-A.

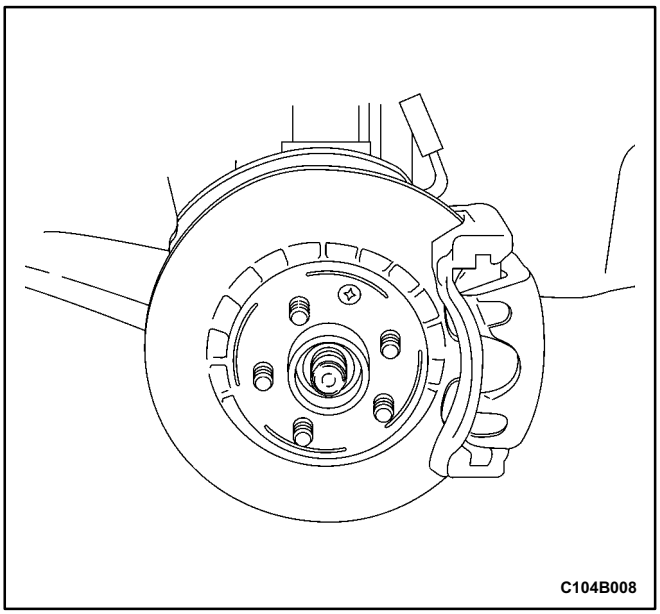

Installation Procedure

Notice: Do not damage the seal.

1. Clean the hub seal and the transaxle seal.
2. Install the drive axle into the transaxle.
3. Install the wheel hub onto the drive axle shaft.

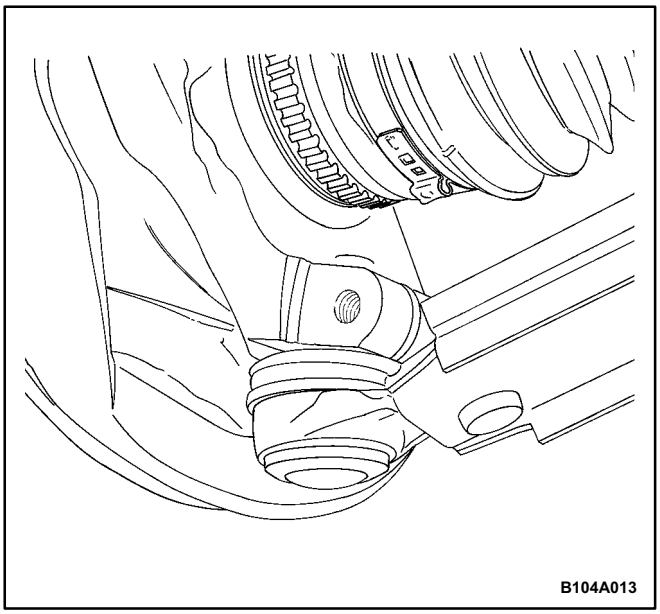

4. Mount the steering knuckle onto the lower ball joint.

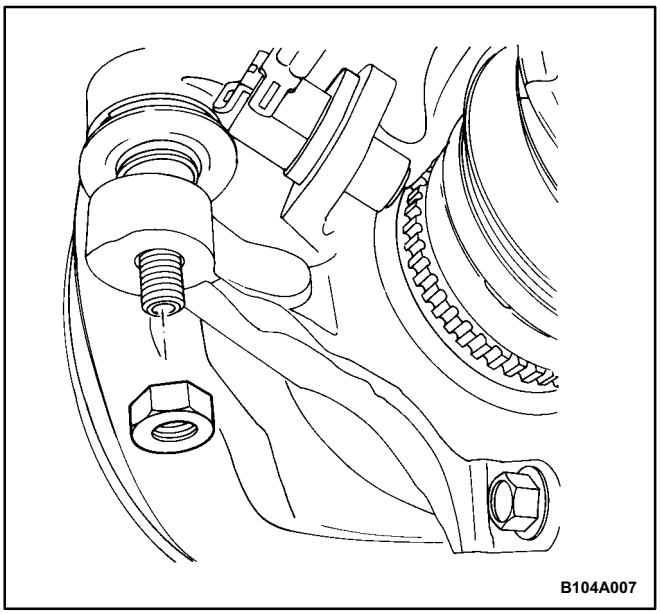

5. Install the tie rod into the knuckle/strut and install the tie rod nut.

   Tighten

   Tighten the tie rod nut to 60 N•m (44 lb•ft).

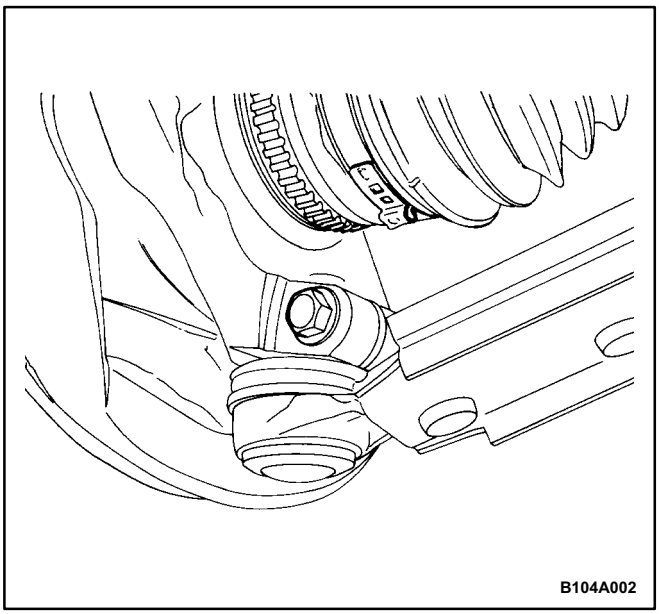

6. Install the lower ball joint nut and bolt.

Tighten

Tighten the lower ball joint nut and bolt to 90 N•m (66 lb•ft).

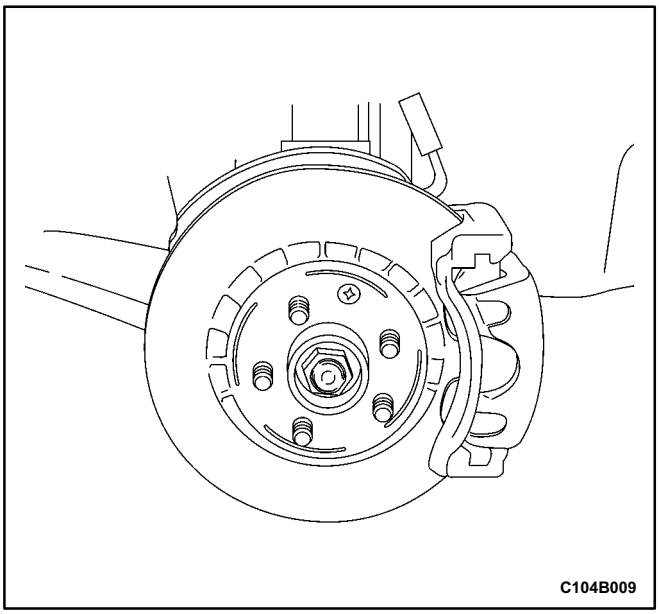

7. Loosely install a new axle shaft caulking nut. Always use a new nut.
8. Install the wheels. Loosely install the bolts. Refer to *Section 2E, Tires and Wheels.*

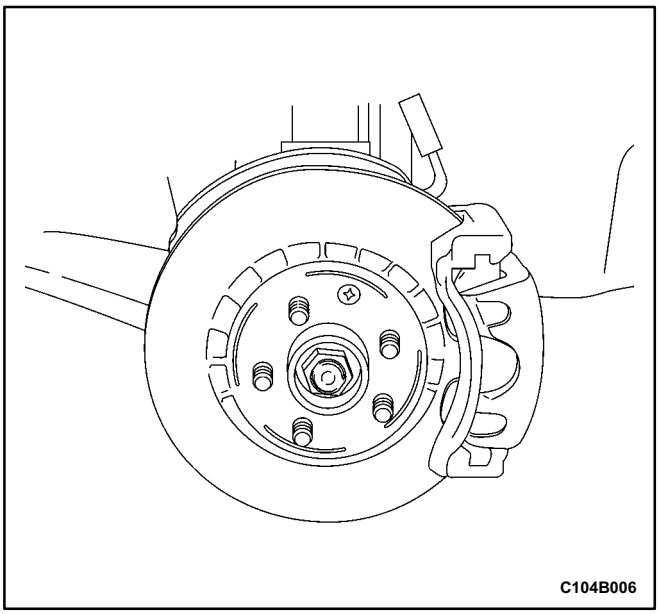

9. Lower the vehicle to the floor.

Tighten

Tighten the wheel bolts to 90 N•m (66 lb•ft).

Tighten

Tighten the axle shaft caulking nut to 180 N•m (133 lb•ft). Loosen the nut and re-tighten the nut to 50 N•m (37 lb•ft). Then tighten the nut further by 60 degrees.

10. Peen the caulking nut with a punch and a hammer until the nut is locked into place on the axle shaft hub.
11. Install the engine under covers. Refer to *Section 9N, Frame and Underbody*.
12. Refill the transaxle fluid to the proper level. Refer to *Section 5B, Five-Speed Manual Transaxle.*

UNIT REPAIR

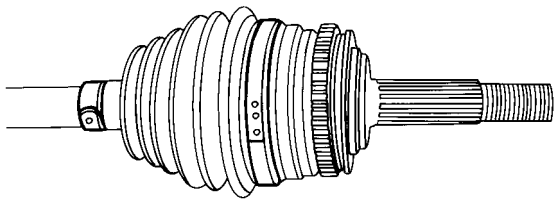
A104A020

OUTER JOINT SEAL

Tools Required

J-8059 Snap Ring Pliers

J-35566 Seal Clamp Pliers

Removal Procedure

1. Remove the drive axle shaft from the vehicle. ``Refer to ``Drive Axle Assembly'' in this section.
2. Remove the large seal retaining clamp. Discard the clamp.
3. Remove the small seal retaining clamp. Discard the clamp.

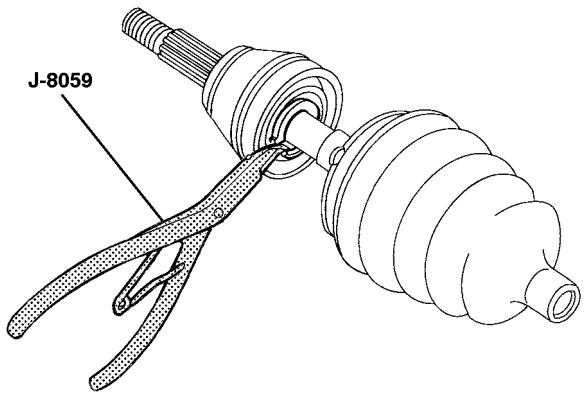

B104A009

4. Degrease the joint.
5. Spread the snap ring using the snap ring pliers J-8059 and remove the outer joint from the axle shaft.

Caution: Do not disassemble the outer joint assembly. Parts are match fit and cannot be serviced separately. Improper reassembly will adversely affect both performance and safety.

6. Remove the seal from the joint assembly.

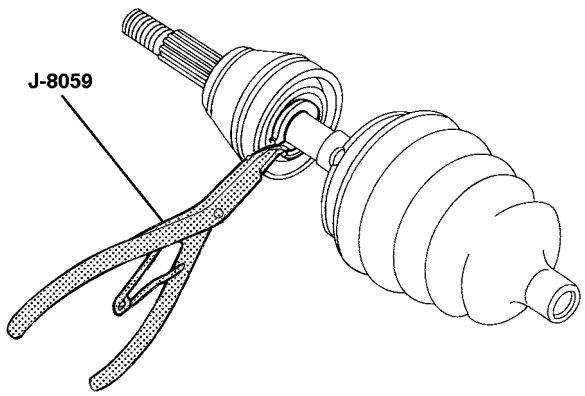

B104A009

Installation Procedure

1. Install the seal onto the axle shaft.
2. Spread the snap ring using the snap ring pliers J-8059 and install the outer joint onto the axle shaft.
3. Fill the joint seal with 175 to 195 g (6.2 to 6.9 ounces) of the recommended grease. Repack the joint with 175 to 195 g (6.2 to 6.9 ounces) of the recommended grease.

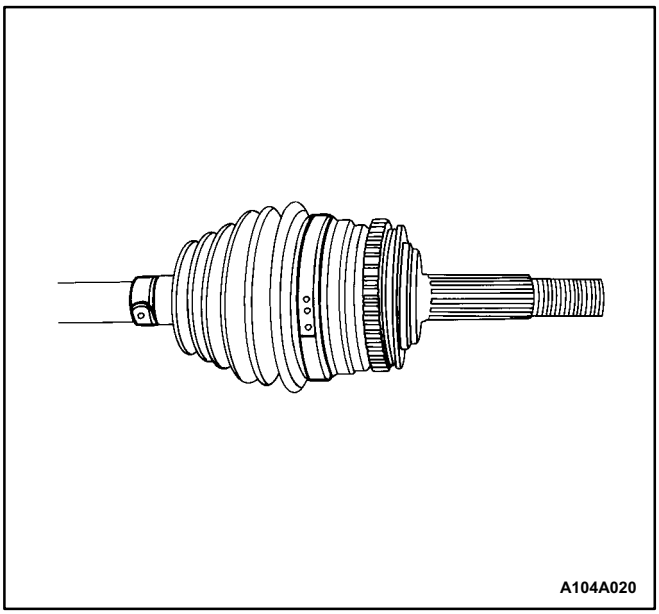

4. Install a new large seal retaining clamp and a new small seal retaining clamp.

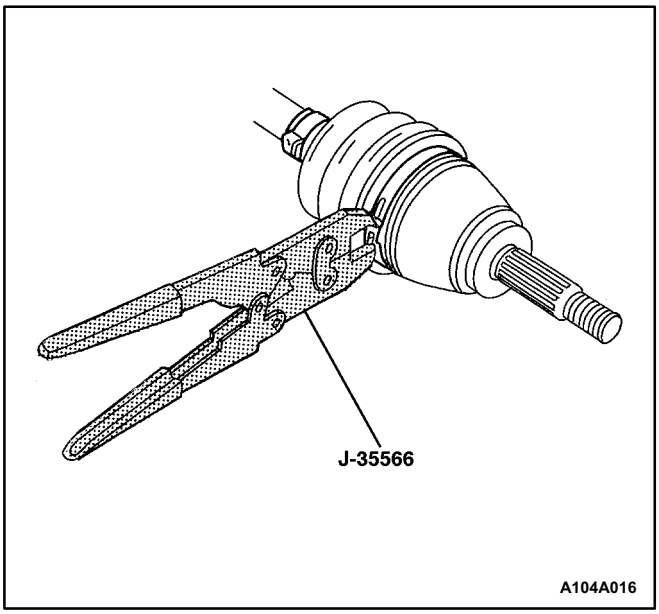

5. Crimp the new small seal retaining clamp and the new large seal retaining clamp using the seal clamp pliers J 35566.
6. Install the drive axle shaft onto the vehicle. Refer to ``Drive Axle Assembly'' in this section.

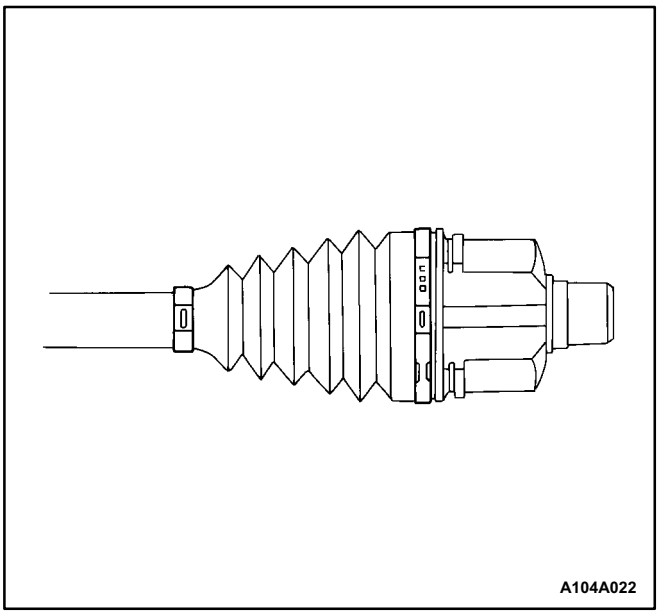

INNER TRIPOT SEAL

Tools Required

J-8059 Snap Ring Pliers

J-35566 Seal Clamp Pliers

Removal Procedure

1. Remove the drive axle from the vehicle. Refer to ``Drive Axle Assembly'' in this section.
2. Remove the large seal retaining clamp. Discard the clamp.
3. Remove the small seal retaining clamp. Discard the clamp.

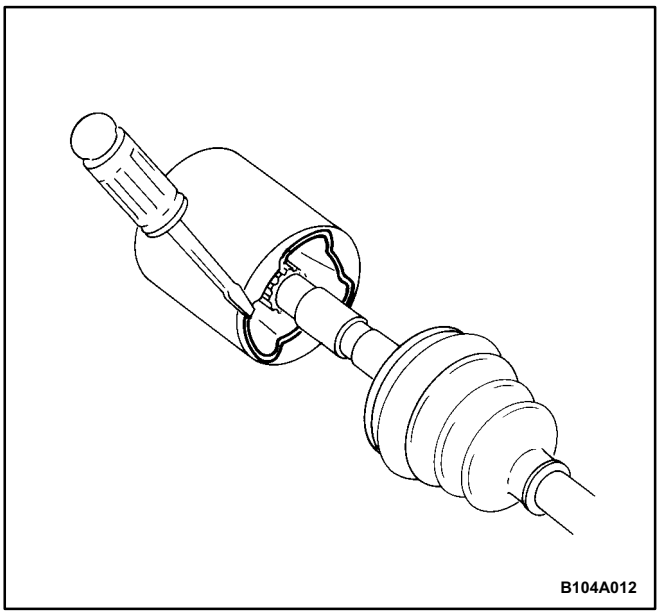

4. Pry the tripot joint retaining ring from the tripot housing.

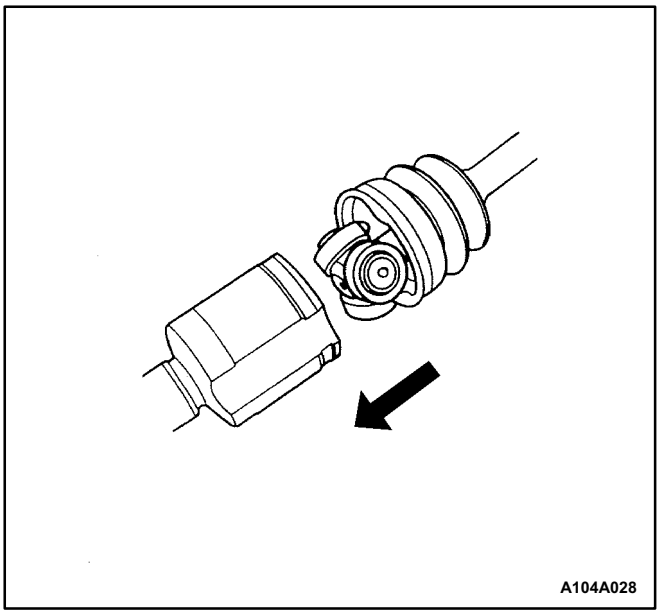

5. Remove the tripot housing from the seal.

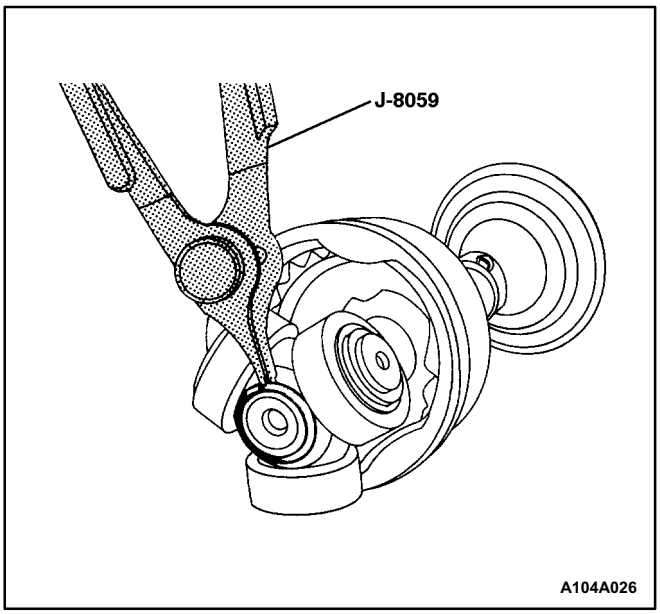

6. Degrease the tripot assembly.
7. Remove the shaft retaining ring using the snap ring pliers J-8059.

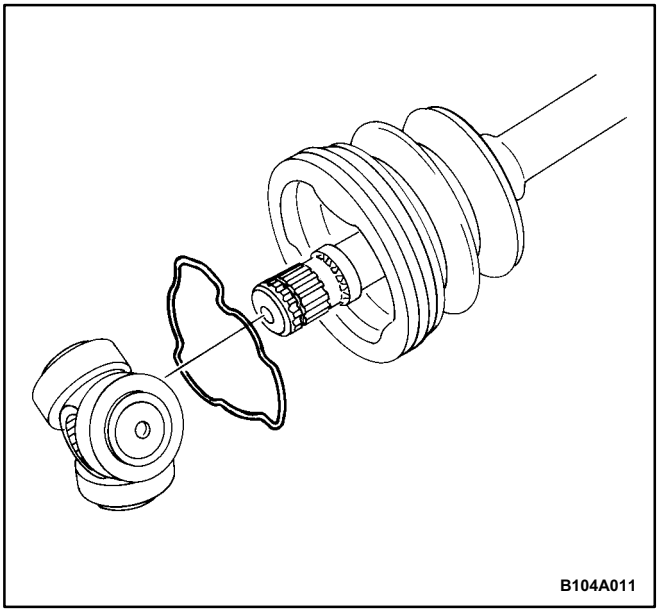

8. Remove the tripot and the tripot joint retaining ring from the axle shaft.
9. Remove the tripot joint seal from the axle shaft.

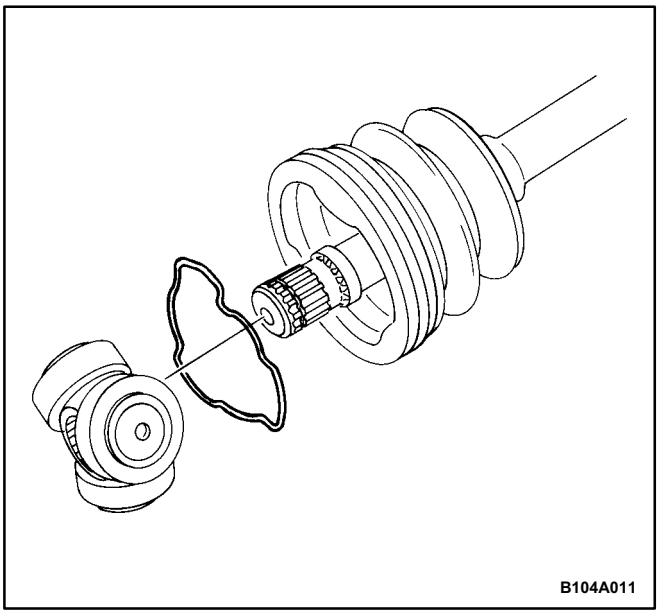

Installation Procedure

1. Install a new small seal retaining clamp onto the seal. Do not crimp the seal retaining clamp.
2. Install the seal onto the axle shaft.
3. Install the tripot joint retaining ring and the tripot onto the axle shaft.

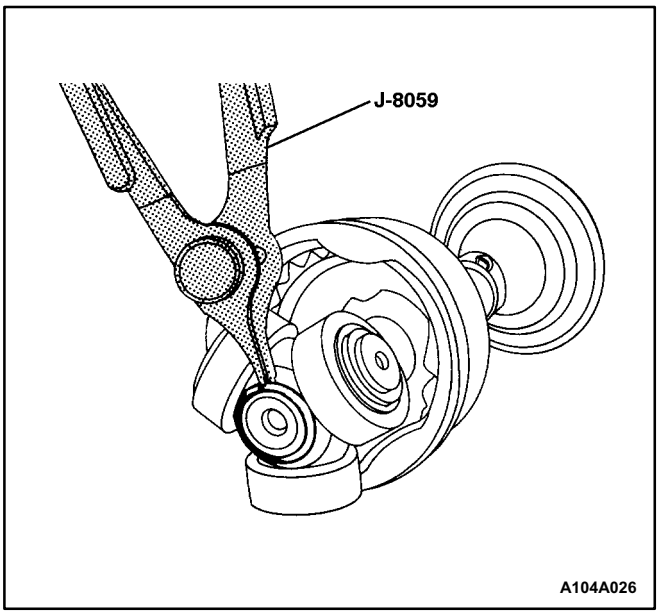

4. Install the shaft retaining ring onto the axle shaft using the snap ring pliers J-8059.

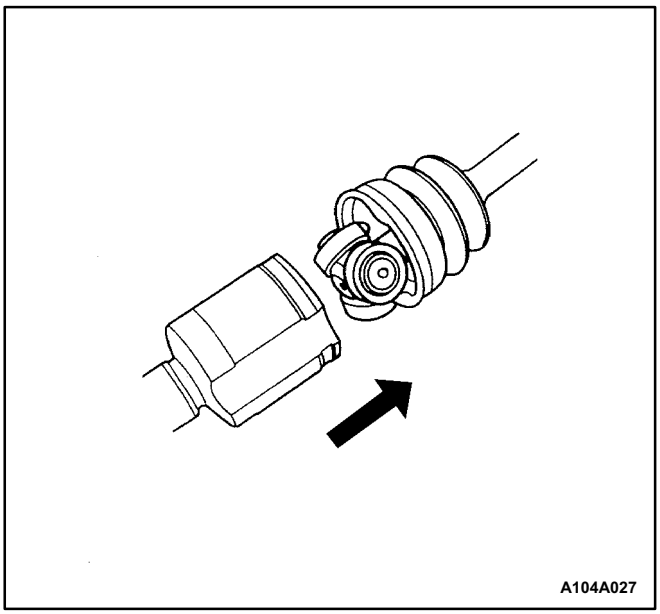

5. Fill the tripot housing with 195 to 215 g (6.9 to 7.6 ounces) of the recommended grease. Repack the tripot with 195 to 215 g (6.9 to 7.6 ounces) of the recommended grease.
6. Install the tripot housing onto the tripot assembly.

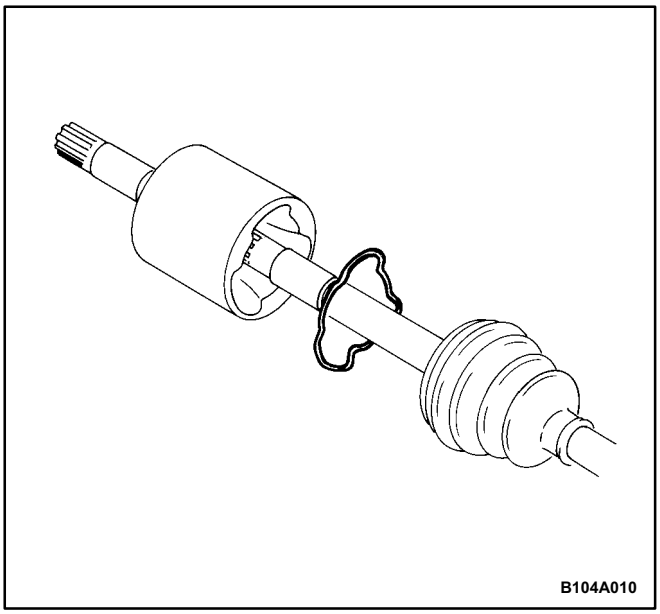

7. Install the tripot joint retaining ring into the tripot housing.

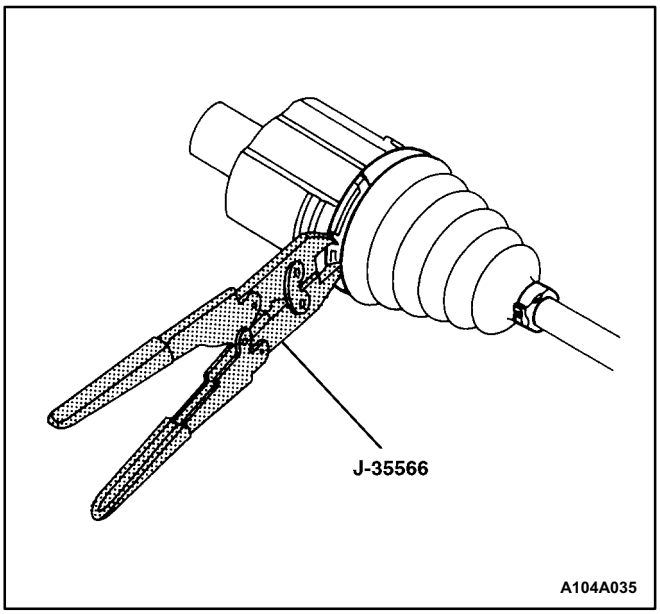

8. Install a new large seal retaining clamp. Crimp the large seal retaining clamp using the seal clamp pliers J-35566.
9. Crimp the new small seal retaining clamp using the seal clamp pliers J-35566.
10. Install the drive shaft onto the vehicle. Refer to ``Drive Axle Assembly'' in this section.

GENERAL DESCRIPTION AND SYSTEM OPERATION

FRONT DRIVE AXLE

General Description

Drive axles are flexible shaft assemblies that transmit a rotational force from the transaxle to the front-wheel assemblies. Each axle assembly consists of an inner constant velocity joint and an outer constant velocity joint connected to an axle shaft. The inner joint is completely flexible and has the ability to move in and out. The outer joint is also flexible, but it cannot move in and out. The drive axles use a Rzeppa style joint on the outboard side and a tripot style joint on the inboard side.

BRAKES

CONTENTS

SECTION 4A	HYDRAULIC BRAKES
SECTION 4B	MASTER CYLINDER
SECTION 4C	POWER BOOSTER
SECTION 4D	FRONT DISC BRAKES
SECTION 4E	REAR DISC BRAKES
SECTION 4F	ANTILOCK BRAKE SYSTEM AND TRACKING CONTROL SYSTEM
SECTION 4G	PARKING BRAKE

SECTION 4A

HYDRAULIC BRAKES

CAUTION: Disconnect the negative battery cable before removing or installing any electrical unit or when a tool or equipment could easily come in contact with exposed electrical terminals. Disconnecting this cable will help prevent personal injury and damage to the vehicle. The ignition must also be in LOCK unless otherwise noted.

TABLE OF CONTENTS

Specifications 4A-1
General Specifications 4A-1
Fastener Tightening Specifications 4A-2
Schematic and Routing Diagrams 4A-2
Brake Lamp Warning Circuit 4A-2
Diagnosis 4A-3
Brake System Testing 4A-3
Brake Hose Inspection 4A-3
Brake Lamp Warning Circuit 4A-3
Maintenance and Repair 4A-6
On-Vehicle Service 4A-6
Manual Bleeding the Brakes 4A-6
Brake Hose Rear 4A-9
Brake Hose Front 4A-11
Stoplamp Switch 4A-13
Brake Pedal 4A-14
General Description and System Operation 4A-17
Warning Lamp Operation 4A-17

SPECIFICATIONS

GENERAL SPECIFICATIONS

2.0L SOHC/DOHC Engines		
Application	**Millimeters**	**Inches**
Front Brake Rotors:		
Discard Thickness	22.00	0.87
Lateral Runout (Installed)	0.10	0.004
Rotor Diameter	256.00	10.08
Rotor Thickness (New)	24.00	0.95
Thickness Tolerance	0.0 / 0.30	0.0 / 0.01
Rear Brake Rotors:		
Discard Thickness	8.0	0.314
Lateral Runout (Installed)	0.100	0.004
Rotor Diameter	258.00	10.16
Rotor Thickness (New)	10.40	0.41
Thickness Tolerance	0.0 / 0.20	0.0 / 0.008
Master Cylinder:		
Bore Diameter (Nominal)	23.81	0.94
Bore Diameter (Maximum)	23.862	0.942
Caliper:		
Minimum Piston Diameter (Front)	57	2.24
Minimum Piston Diameter (Rear)	35	1.38

FASTENER TIGHTENING SPECIFICATIONS

Application	N•m	Lb•Ft	Lb•In
Bleeder Screw	6	-	53
Brake Lines	16	12	-
Brake Pedal to Pedal Bracket Hex Nut	18	13	-
Front Disc Brake Hose to Caliper Bolt	40	30	-
Rear Disc Brake Hose to Caliper Bolt	32	24	-
Trim Panel Screws	3	-	27

SCHEMATIC AND ROUTING DIAGRAMS

BRAKE LAMP WARNING CIRCUIT

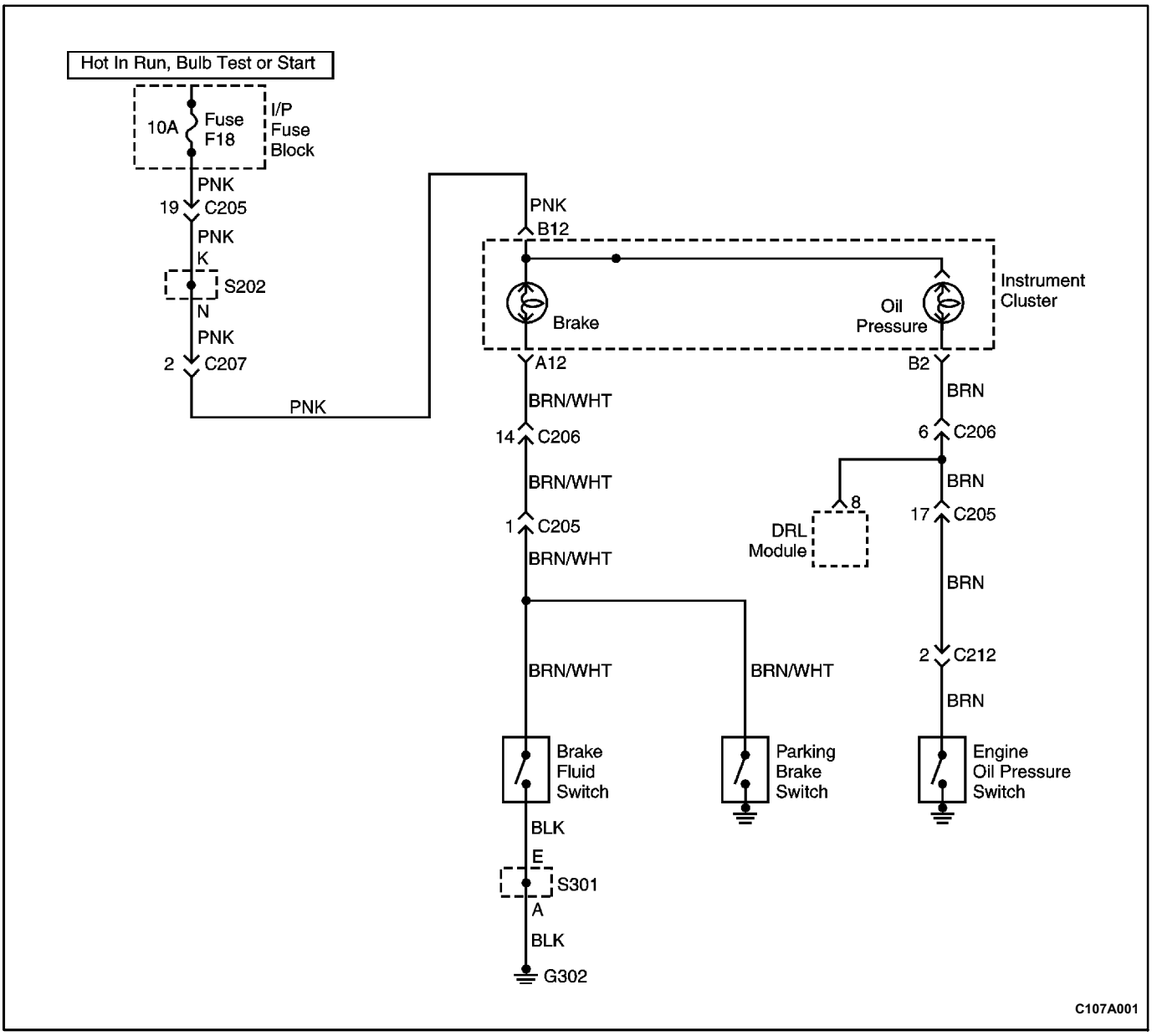

DIAGNOSIS

BRAKE SYSTEM TESTING

Brakes should be tested on a dry, clean, reasonably smooth and level roadway. A true test of brake performance cannot be made if the roadway is wet, greasy, or covered with loose dirt which can cause all tires not to grip the road equally. Testing also will be adversely
affected if the roadway is crowned so as to throw the vehicle's weight so roughly that the wheels tend to bounce.

Test the brakes at different vehicle speeds with both light and heavy pedal pressure; however, avoid locking the brakes and sliding the tires. Locked brakes and sliding tires do not indicate brake efficiency since heavily braked but turning wheels will stop the vehicle in less distance than locked brakes. More tire to road friction is present with a heavily braked, turning tire than with a sliding tire.

Because of the high deceleration capability, a firmer pedal may be felt at higher deceleration levels.

There are three major external conditions that affect brake performance:

- Tires having unequal contact and grip of the road will cause unequal braking. Tires must be equally inflated, and the tread pattern of the right and the left tires must be approximately equal.
- Unequal loading of the vehicle can affect the brake performance since the most heavily loaded wheels require more braking power, and thus more braking effort, than the others.
- Misalignment of the wheels, particularly conditions of excessive camber and caster, will cause the brakes to pull to one side.

To check for brake fluid leaks, hold constant foot pressure on the pedal with the engine running at idle and the shift lever in NEUTRAL. If the pedal gradually falls away with the constant pressure, the hydraulic system may be leaking. Perform a visual check to confirm any suspected leaks.

Check the master cylinder fluid level. While a slight drop in the reservoir level results from normal lining wear, an abnormally low level indicates a leak in the system. The hydraulic system may be leaking either internally or externally. Refer to the procedure below to check the master cylinder. The system may appear to pass this test while still having a slight leak. If the fluid level is normal, check the vacuum booster pushrod length. If an incorrect pushrod length is found, adjust or replace the rod.

Check the master cylinder using the following procedure:

- Check for a cracked master cylinder casting or a brake fluid leak around the master cylinder. Leaks are indicated only if there is at least one drop of fluid. A damp condition is not abnormal.
- Check for a binding pedal linkage and for an incorrect pushrod length. If both of these parts are in satisfactory condition, disassemble the master cylinder and check for an elongated or swollen primary cylinder or piston seals. If swollen seals are found, substandard or contaminated brake fluid should be suspected. If contaminated brake fluid is found, all the components should be disassembled and cleaned, and all the rubber components should be replaced. All of the pipes must also be flushed.

Improper brake fluid, or mineral oil or water in the fluid, may cause the brake fluid to boil or cause deterioration of the rubber components. If the primary piston cups in the master cylinder are swollen, then the rubber parts have deteriorated. This deterioration may also be evidenced by swollen wheel cylinder piston seals on the drum brake wheels.

If deterioration of the rubber is evident, disassemble all the hydraulic parts and wash the parts with alcohol. Dry these parts with compressed air before reassembly to keep the alcohol out of the system. Replace all the rubber parts in the system, including the hoses. When working on the brake mechanisms, check for fluid on the linings. If excessive fluid is found, replace the linings.

If the master cylinder piston seals are in satisfactory condition, check for leaks or excessive heat conditions. If these conditions are not found, drain the fluid, flush the master cylinder with brake fluid, refill the master cylinder, and bleed the system. Refer to „Manual Bleeding the Brakes” in this section.

BRAKE HOSE INSPECTION

The hydraulic brake hoses should be inspected at least twice a year. The brake hose assembly should be checked for road hazard damage, cracks, chafing of the outer cover, and for leaks or blisters. Inspect the hoses for proper routing and mounting. A brake hose that rubs on a suspension component will wear and eventually fail. A light and a mirror may be needed for an adequate inspection. If any of the above conditions are observed on the brake hose, adjust or replace the hose as necessary.

BRAKE LAMP WARNING CIRCUIT

Test Description

The number(s) below refer to step(s) on the diagnostic table.

1. The BRAKE warning lamp should only illuminate when either the brake fluid reservoir is low or the parking brake is applied.
5. The brake fluid level switch is a normally open switch. If the BRAKE warning lamp is off after disconnecting the switch, the brake fluid level switch is stuck closed.
7. If the BRAKE warning lamp is still on after disconnecting the parking brake switch, there is a short to ground in the wire to the parking brake switch.
12. If the BRAKE warning lamp does not operate while performing any of the functions, the fault should be in the ignition feed to the circuit.

17. This step determines if the problem is in the ignition feed to the circuit or in the instrument cluster.
22. The BRAKE warning lamp should illuminate when jumpering the parking brake connector to ground.
24. If the BRAKE warning lamp is on after jumpering the brake fluid level switch terminals, the switch is faulty.

Brake Lamp Warning Circuit

Step	Action	Value(s)	Yes	No
1	Turn the ignition ON and keep the engine running. Is the BRAKE warning lamp always on?	-	Go to *Step 2*	Go to *Step 11*
2	Release the parking brake fully. Is the BRAKE warning lamp off?	-	System OK	Go to *Step 3*
3	Check the brake fluid level. Is the fluid level OK?	-	Go to *Step 5*	Go to *Step 4*
4	1. Fill the brake fluid reservoir with clean DOT 3 / DOT 4 equivalent hydraulic fluid. 2. Replace the cap on the fluid reservoir. Is the BRAKE warning lamp on?	-	Go to *Step 5*	System OK
5	Disconnect the harness connector from the brake fluid level switch. Is the BRAKE warning lamp on?	-	Go to *Step 7*	Go to *Step 6*
6	Replace the brake fluid level switch. Is the repair complete?	-	System OK	-
7	1. Connect the brake fluid level switch. 2. Disconnect the parking brake switch. Is the BRAKE warning lamp on?	-	Go to *Step 9*	Go to *Step 8*
8	Replace the parking brake switch. Is the repair complete?	-	System OK	-
9	Check for a short to ground in the wiring between the instrument cluster terminal A12 and the parking brake switch. Is there a short?	-	Go to *Step 10*	Go to *Step 11*
10	Repair the wiring as needed. Is the repair complete?	-	System OK	-
11	Check the BRAKE warning lamp after doing each of the following functions: ● Apply the parking brake. ● Activate the low level switch. Does the BRAKE warning lamp operate for all of these conditions?	-	System OK	Go to *Step 12*
12	Check the BRAKE warning lamp after doing each of the following functions: ● Apply the parking brake. ● Activate the low level switch. Does the BRAKE warning lamp operate for none of these conditions?	-	Go to *Step 13*	Go to *Step 20*
13	1. Turn the ignition off. 2. Inspect the I/P fuse F18. Is the fuse OK?	-	Go to *Step 15*	*Go to Step 14*
14	Replace the I/P fuse. Is the repair complete?	-	System OK	-

Brake Lamp Warning Circuit (Cont'd)

Step	Action	Value(s)	Yes	No
15	Inspect the BRAKE warning lamp bulb. Is the bulb OK?	-	Go to *Step 17*	Go to *Step 16*
16	Replace the bulb. Is the repair complete?	-	System OK	-
17	1. Disconnect the instrument cluster connector. 2. Turn the ignition ON. 3. Measure the voltage at the instrument cluster connector terminal B12. Does the voltage measure within the value specified?	11-14 V	Go to *Step 18*	Go to *Step 19*
18	1. Turn the ignition off. 2. Repair the open in the instrument cluster. Is the repair complete?	-	System OK	-
19	1. Turn the ignition off. 2. Repair the open in the wiring between the instrument cluster connector terminal B12 and the ignition switch. Is the repair complete?	-	System OK	-
20	Apply the parking brake. Does the BRAKE warning lamp operate with the parking brake applied?	-	Go to *Step 21*	Go to *Step 22*
21	Activate the low level switch. Does the BRAKE warning lamp operate with the low level switch activated?	-	System OK	Go to *Step 24*
22	1. Turn the ignition ON. 2. Disconnect the parking brake switch. 3. Jumper the parking brake switch connector terminal to ground. Is the BRAKE warning lamp on?	-	Go to *Step 8*	Go to *Step 23*
23	1. Turn the ignition off. 2. Repair the open in the wire between the instrument cluster connector terminal A12 and the parking brake switch connector terminal. Is the repair complete?	-	System OK	-
24	1. Disconnect the brake fluid level switch. 2. Turn the ignition ON. 3. Jumper the brake fluid level switch connector terminals. Is the BRAKE warning lamp on?	-	Go to *Step 6*	Go to *Step 25*
25	1. Turn the ignition off. 2. Connect a test light between the battery positive and the BRN/WHT wire terminal of the brake fluid level switch. Is the test light on?	-	Go to *Step 26*	Go To *Step 27*
26	Repair the open in the wiring between ground and the brake fluid level switch. Is the repair complete?	-	System OK	-
27	Repair the open in the wiring between the instrument cluster connector terminal A12 and the brake fluid level switch. Is the repair complete?	-	System OK	-

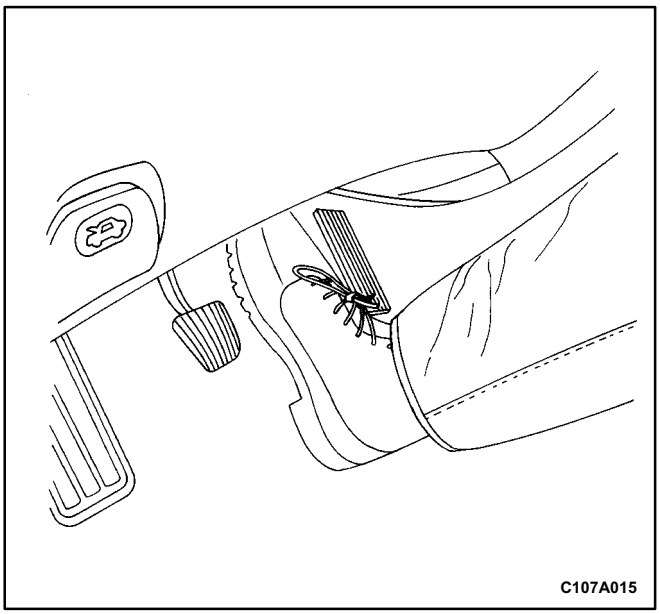

MAINTENANCE AND REPAIR

ON-VEHICLE SERVICE

(Left-Hand Drive Shown, Right-Hand Drive Similar)

MANUAL BLEEDING THE BRAKES

Important: The bleeding sequence for vehicles equipped with a conventional braking system is as follows: right rear, left front, left rear, and right front. For ABS vehicles, refer to *Section 4F, Antilock Brake System and Traction Control System.*

1. Remove the booster reserve by applying the brakes several times with the engine off until all the reserve is depleted.

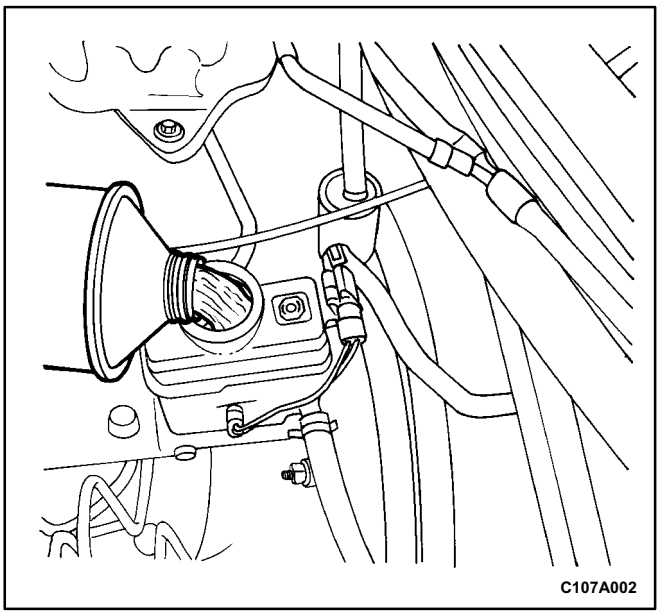

Important: If the master cylinder is known or suspected to have air in the bore, then it must be bled before any wheel cylinder or caliper is bled.

2. Fill the master cylinder reservoir with the brake fluid. Keep the master cylinder at least one half full of the brake fluid during the bleeding operation.

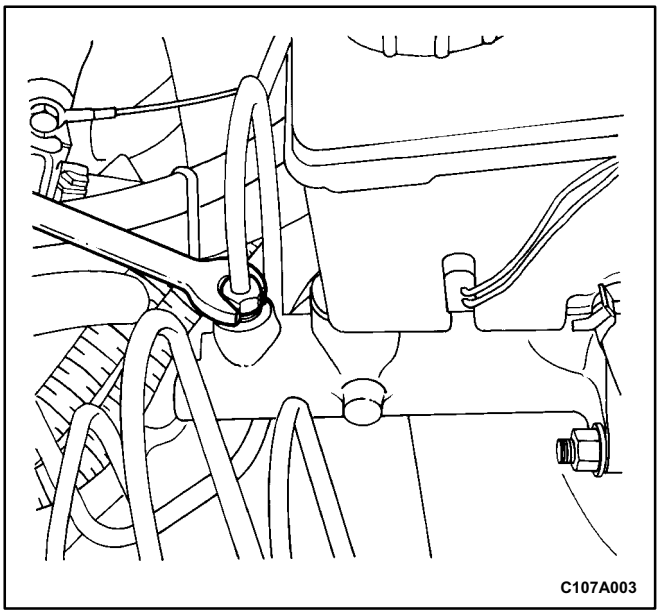

3. Disconnect the brake line at the top of the master cylinder.
4. Allow brake fluid to fill the master cylinder until it begins to flow from the port.
5. Connect the brake line to the master cylinder.

   Tighten

   Tighten the brake line to 16 N•m (12 lb•ft).

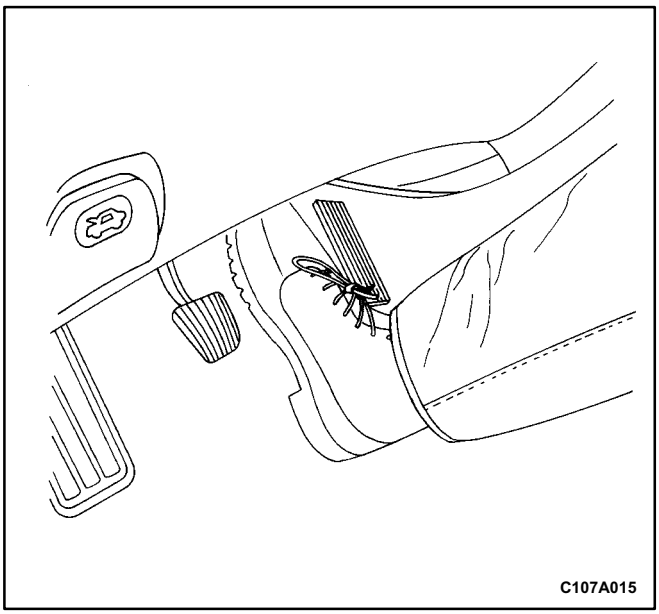

6. Slowly push and hold the brake pedal one time.

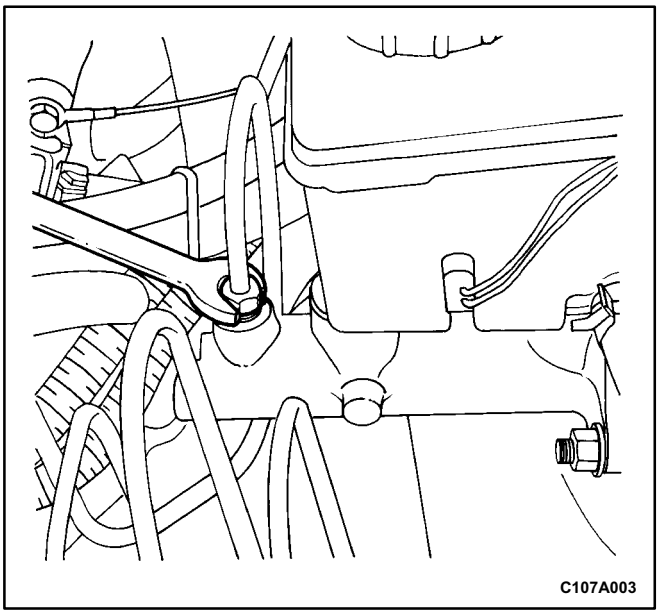

7. Loosen the brake line at the top of the master cylinder to purge the air from the cylinder.
8. Tighten the brake line, as in Step 5, and then release the brake pedal slowly. Wait 15 seconds before proceeding to the next step.
9. Repeat the sequence, including the 15 second wait, until all the air is removed from the master cylinder bore.

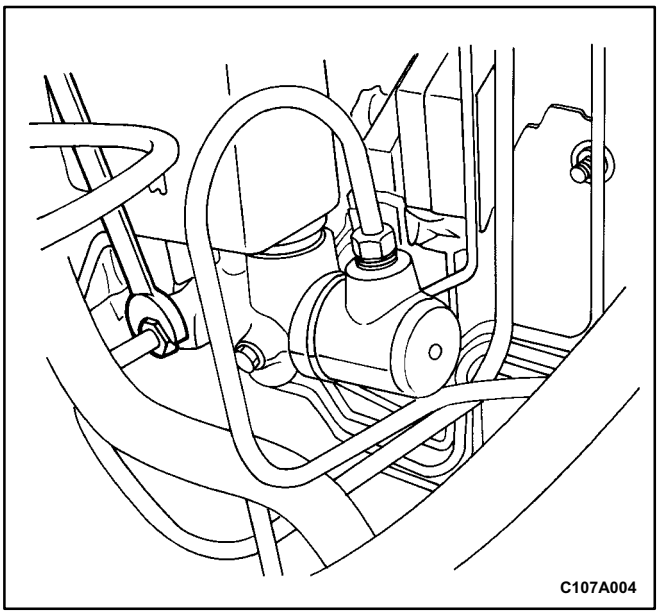

Notice: Care must be taken to prevent the brake fluid from contacting any painted surface to prevent damage to the paint finish.

10. After all the air has been removed at the top connection, bleed the master cylinder at the side connection in the same manner as with the top connection.

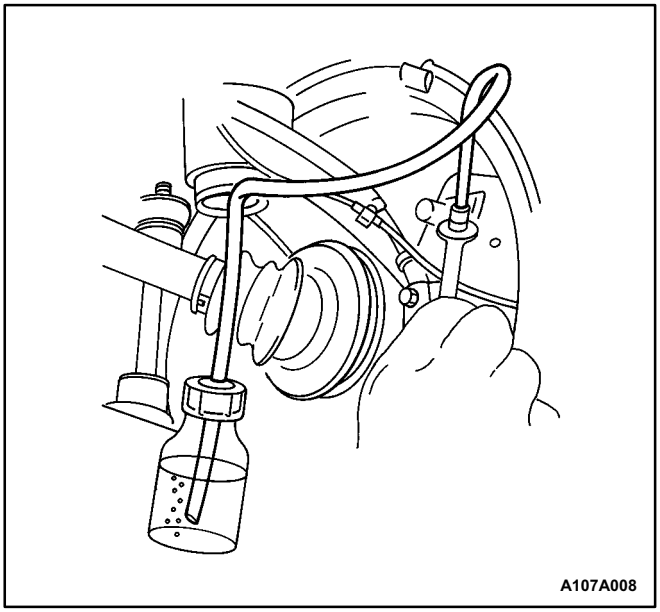

11. Attach a transparent tube over the valve. Allow the tube to hang submerged in the brake fluid in a transparent container.

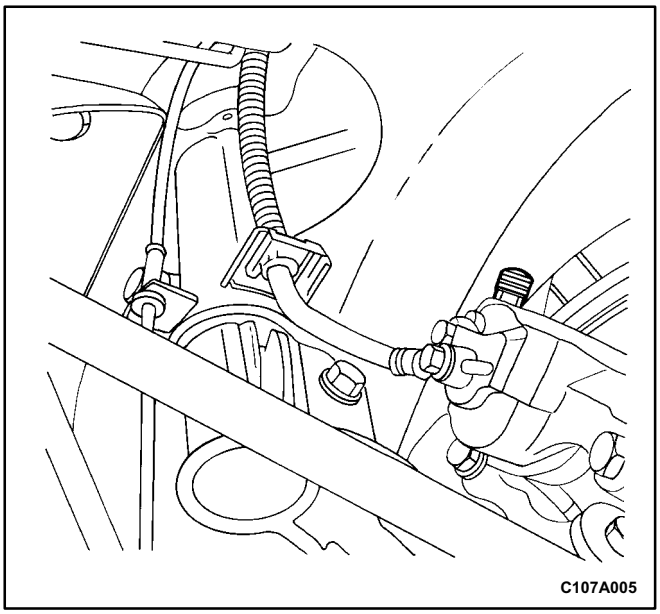

12. Slowly push and hold the brake pedal one time.
13. Remove the bleeder valve cap and loosen the bleeder valve to purge the air from the cylinder.
14. Tighten the rear bleeder screw.

Tighten

Tighten the bleeder screw (front or rear) to 6 N•m (53 lb•in).

15. Slowly release the brake pedal. Wait 15 seconds before proceeding with the next step.

Important: Rapid pumping of the brake pedal pushes the master cylinder secondary piston down the bore in a manner that makes it difficult to bleed the system.

16. Repeat the sequence, including the 15 second wait, until all the air is removed. It may be necessary to repeat the sequence 10 or more times to remove all the air.
17. Locate the front bleeder caps.
18. Bleed the front brake following the appropriate sequence for non ABS systems, beginning with Step 12.
19. Check the brake pedal for sponginess. Repeat the entire bleeding procedure to correct this condition.

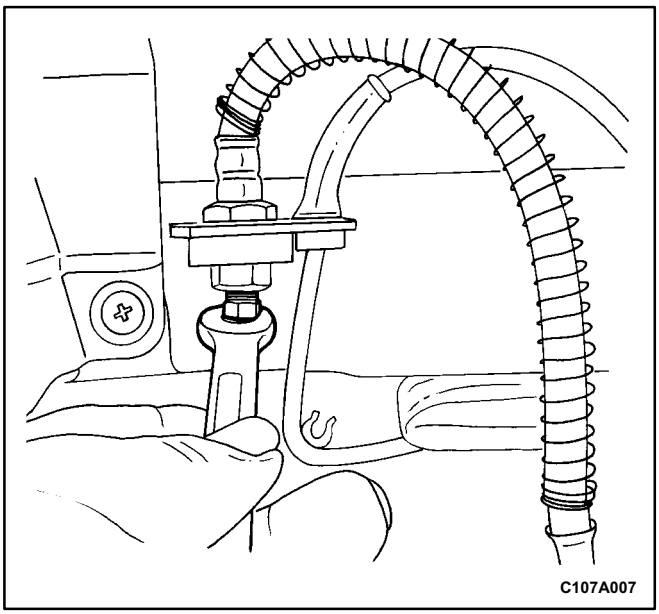

BRAKE HOSE REAR

Removal Procedure

1. Raise and suitably support the vehicle.
2. Disconnect the brake line from the disc brake hose at the wheel housing bracket on each side of the vehicle.
3. Remove the brake hose retainer.

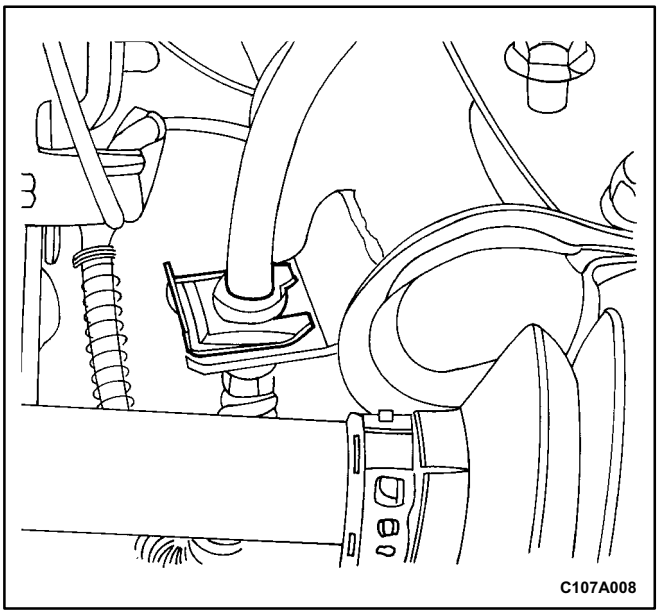

4. Remove the rear disc brake hose retainer and the brake hose from the bracket on the steering knuckle shaft.

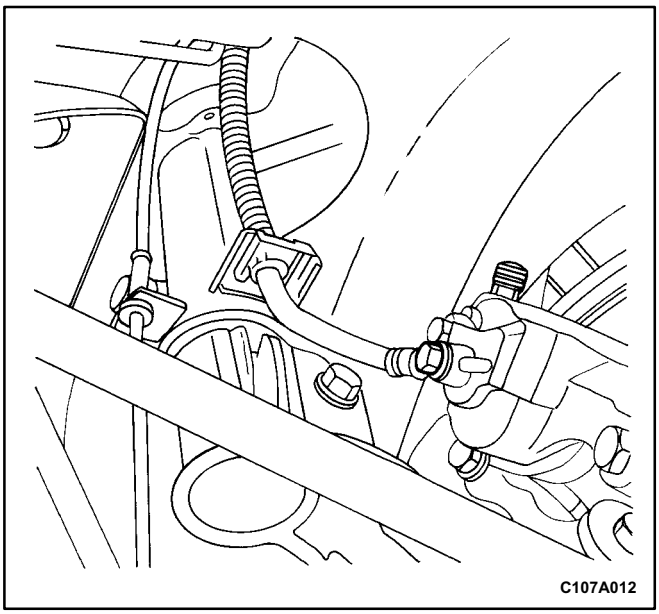

5. Remove the rear disc brake hose from the caliper.

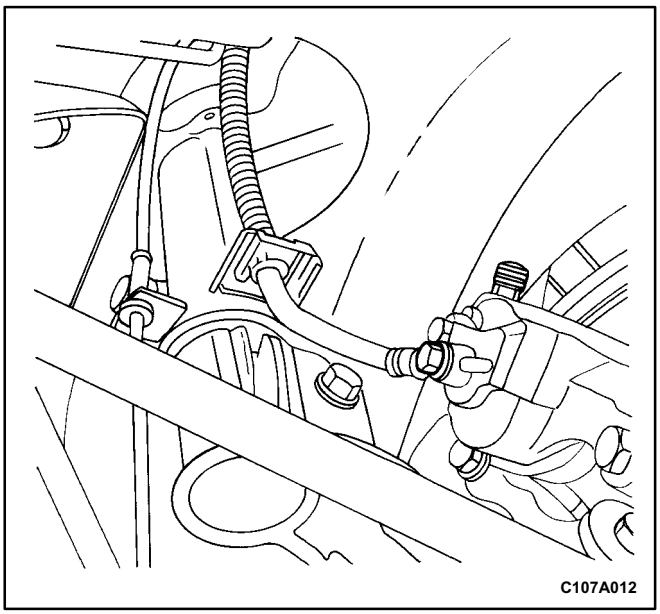

Installation Procedure

1. Install the rear disc brake hose to the caliper.

   Tighten

   Tighten the rear disc brake hose to caliper bolt to 32 N•m (24 lb•ft).

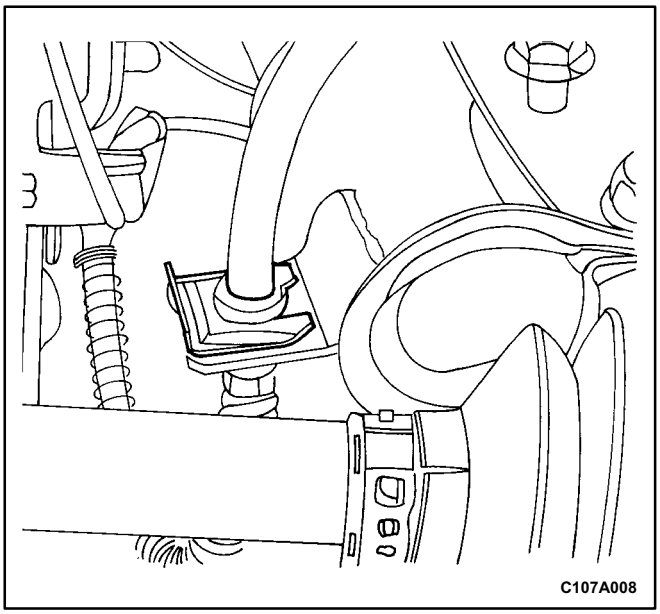

2. Install the rear disc brake hose and the retainer on the bracket on the steering knuckle shaft.

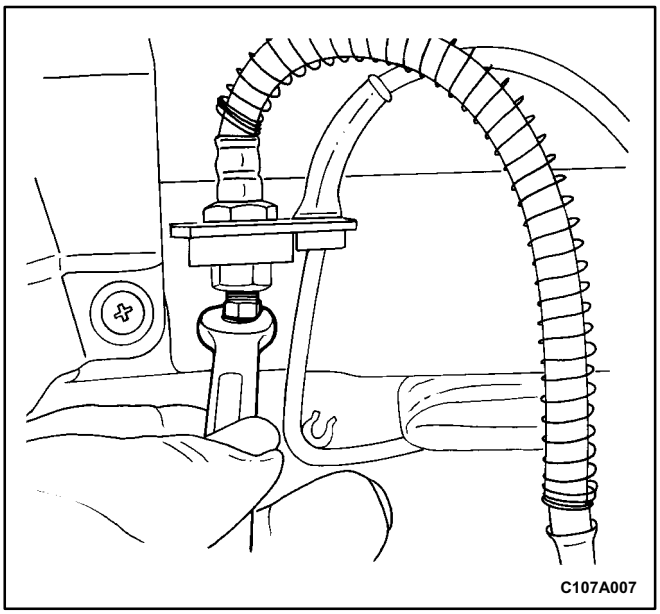

3. Install the rear disc brake line to the brake hose on the wheel housing bracket.

   Tighten

   Tighten the brake line to 16 N•m (12 lb•ft).
4. Lower the vehicle.
5. Bleed the brake system. Refer to „Manual Bleeding the Brakes” in this section.
6. Check the brake system for leaks.

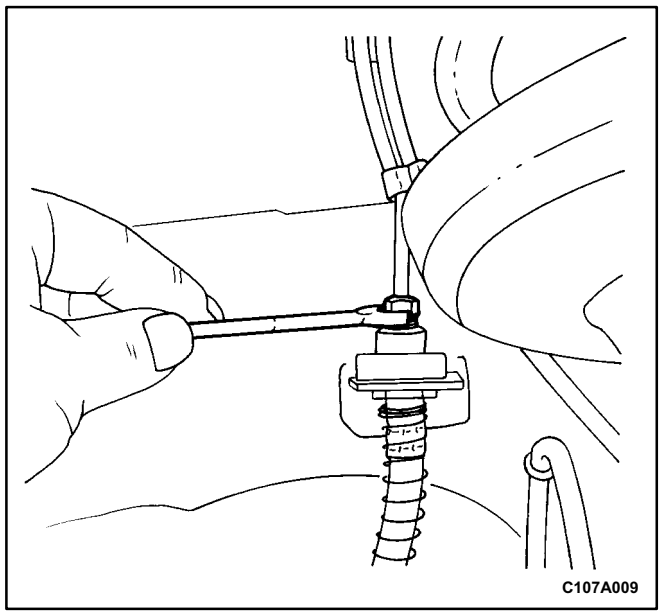

BRAKE HOSE FRONT

Removal Procedure

1. Raise and suitably support the vehicle.
2. Disconnect the brake line from the brake hose support bracket on the wheel housing on each side of the vehicle.
3. Remove the retainer.
4. Remove the brake hose from the wheel housing bracket.

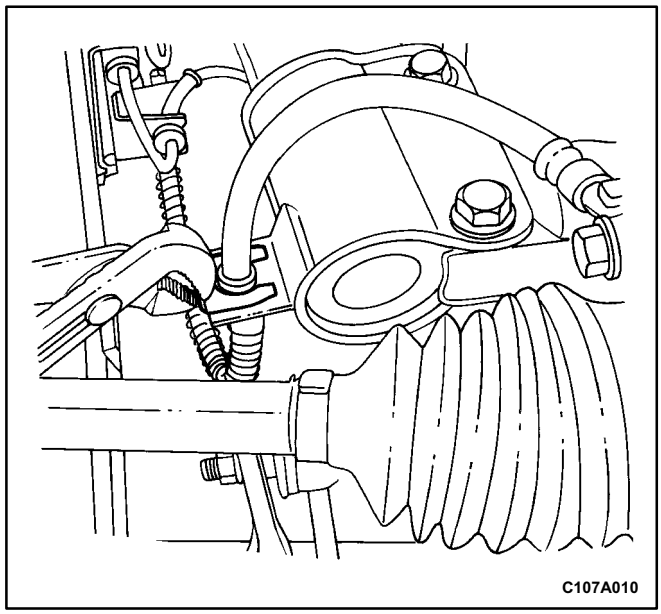

5. Remove the retainer and disconnect the brake hose at the steering knuckle shaft bracket.

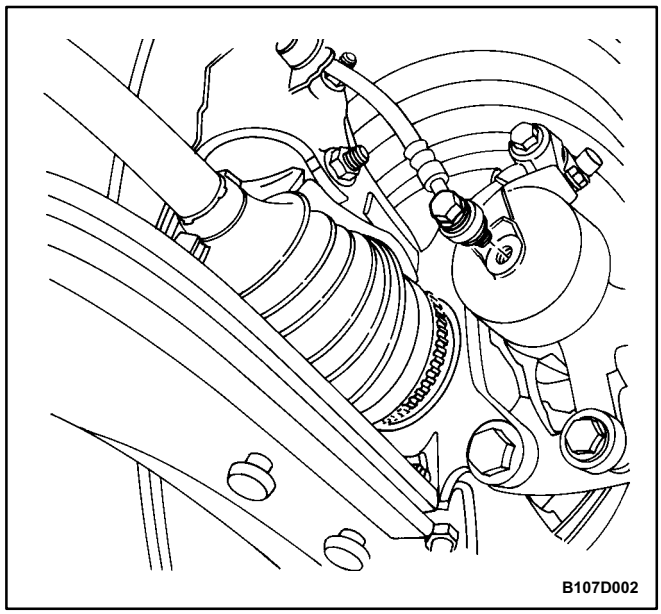

6. Remove the bolt from the brake caliper.
7. Remove the ring seals and the disc brake hose.

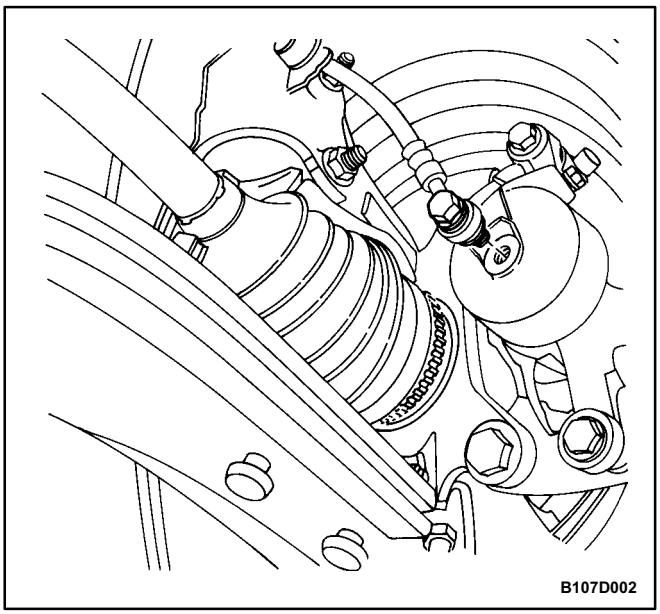

Installation Procedure

1. Install the new disc brake hose to the caliper with new seal rings and the bolt.

   Tighten

   Tighten the front disc brake hose to caliper bolt to 40 N•m (30 lb•ft).

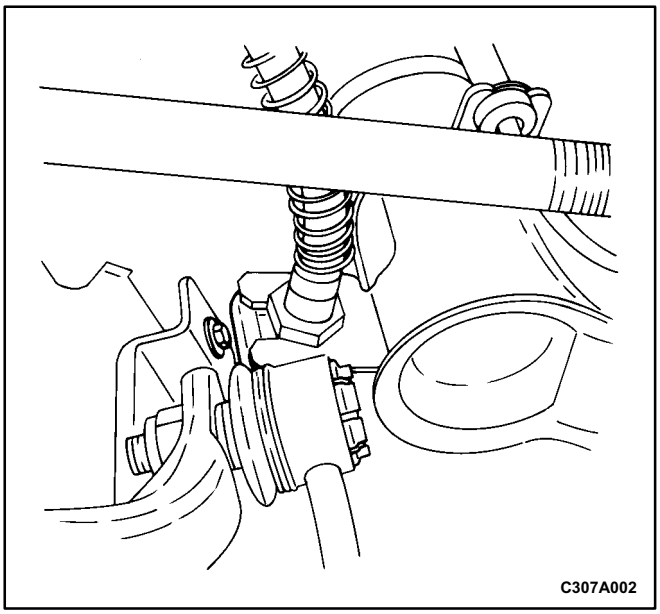

2. Connect the brake hose at the steering knuckle shaft bracket and install the retainer.

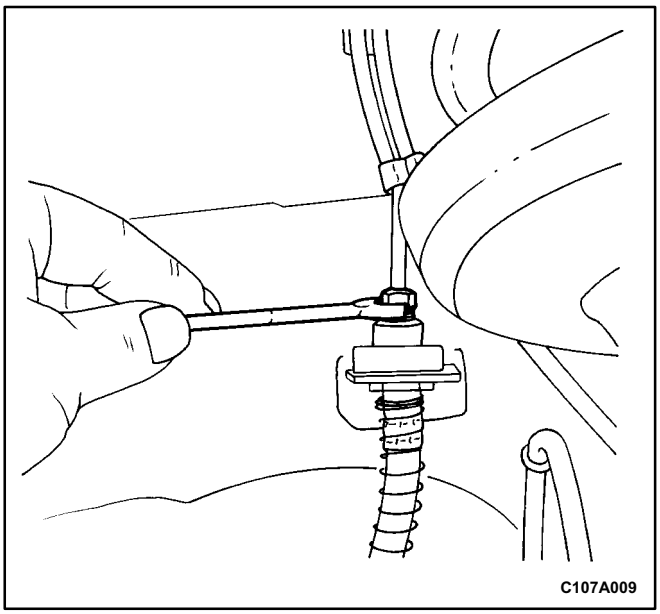

3. Connect the brake line to the brake hose on the wheel housing bracket on each side of the vehicle and install the retainer.

   Tighten

   Tighten the brake line to 16 N•m (12 lb•ft).
4. Lower the vehicle.
5. Bleed the brake system. Refer to „Manual Bleeding the Brakes” in this section.
6. Check the brake system for leaks.

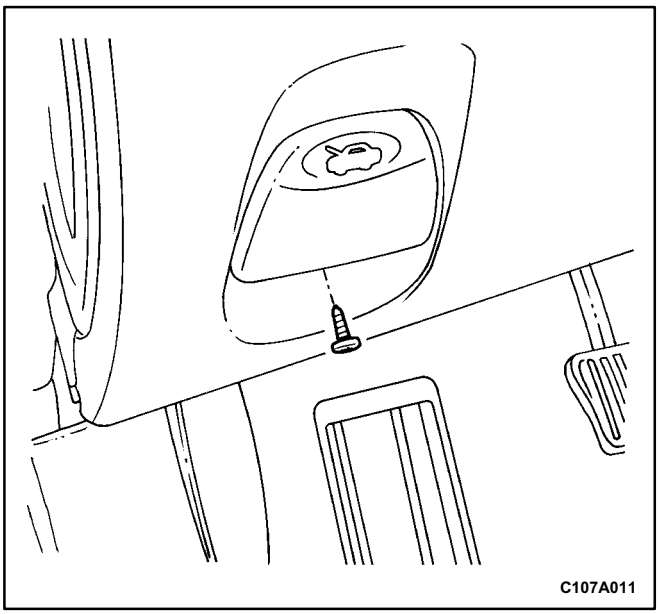

STOPLAMP SWITCH

(Left-Hand Drive Shown, Right-Hand Drive Similar)

Removal Procedure

1. Disconnect the negative battery cable.
2. Remove the trim panel screws.
3. Remove the trim panel.

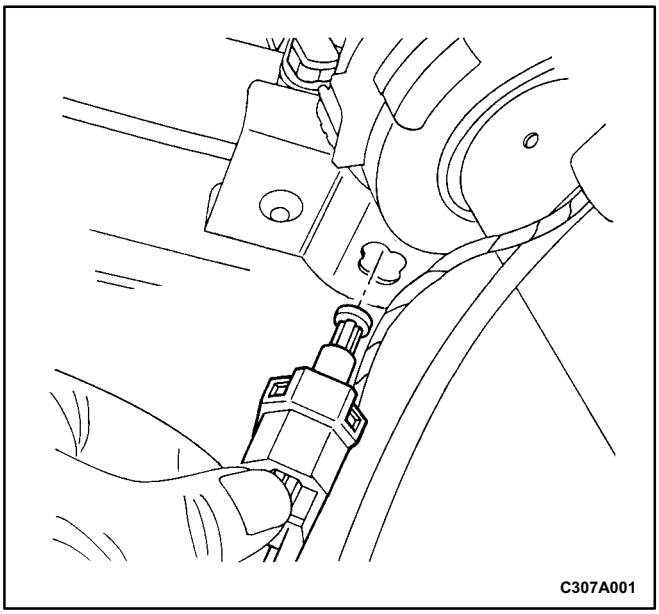

4. Turn the stoplamp switch connector assembly clockwise and remove it from the brake pedal bracket.
5. Separate the stoplamp switch from the connector.

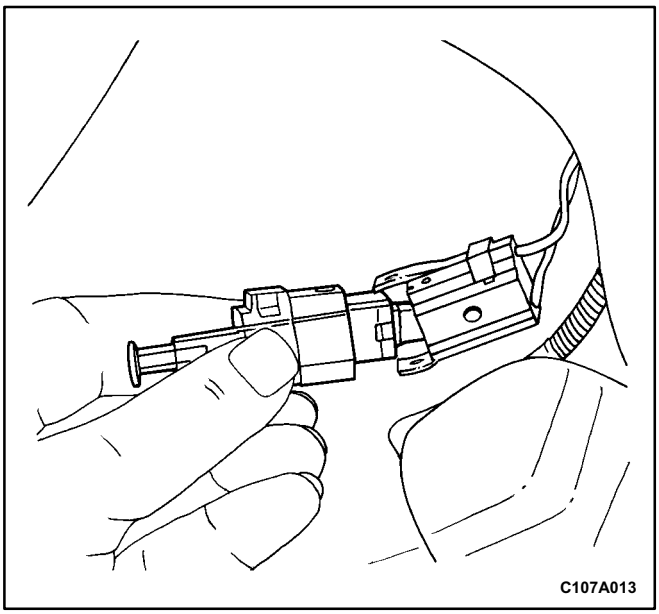

Installation Procedure

1. Place the stoplamp switch into the plug connector.
2. Twist the stoplamp switch connector assembly into the brake pedal bracket hole.

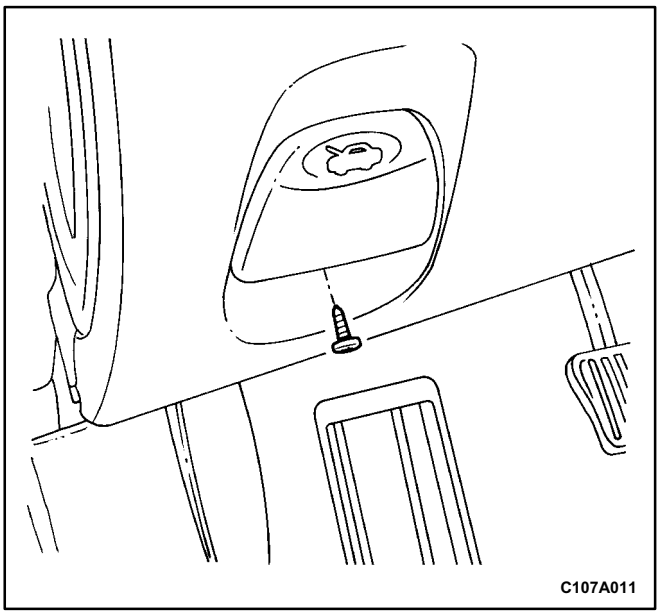

3. Press the brake pedal and pull the switch plunger to its maximum setting to adjust the switch.
4. Release the switch plunger and pull up on the pedal.
5. Install the trim panel with the screws.

   Tighten

   Tighten the trim panel screws to 3 N•m (27 lb•in).
6. Connect the negative battery cable.

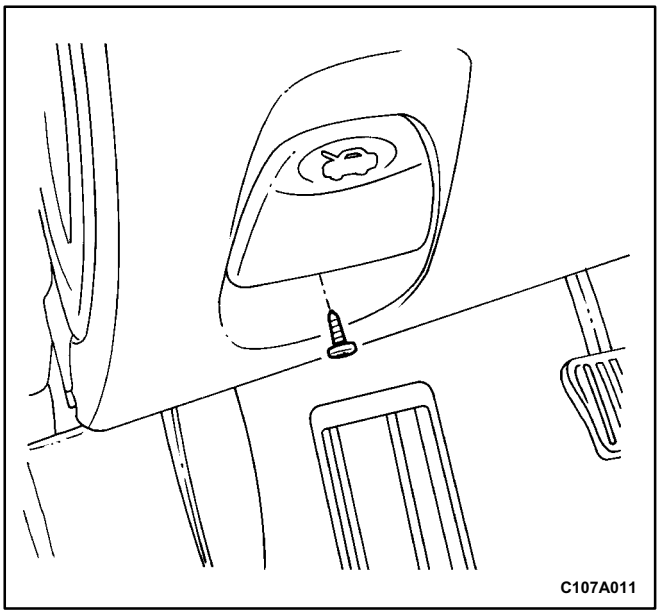

BRAKE PEDAL

Removal Procedure

1. Remove the screws holding the trim panel to the instrument panel.
2. Remove the trim panel.

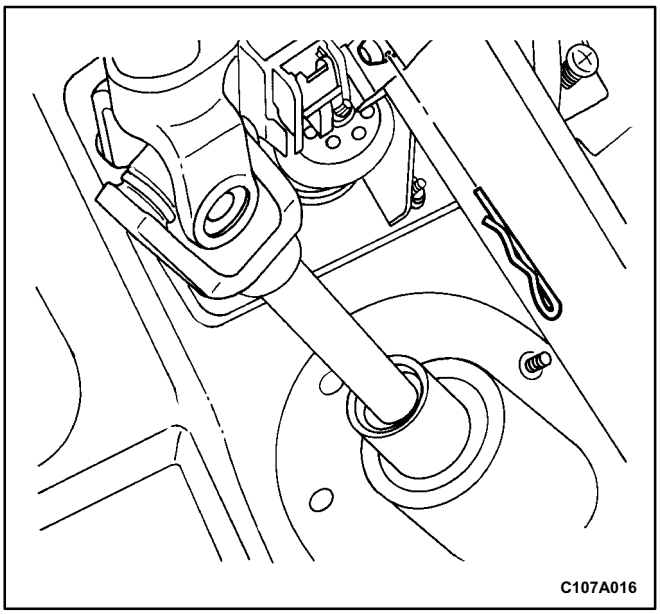

3. Remove the stoplamp switch. Refer to „Stoplamp Switch” in this section.
4. Disconnect the spring retaining clip and the pin from the pushrod clevis.

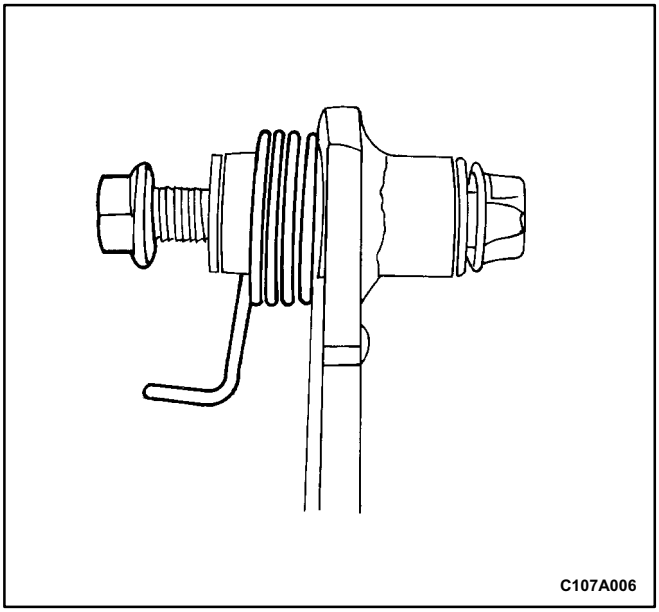

5. Remove the hex nut and the spring.
6. Remove the brake pedal and the bolt.

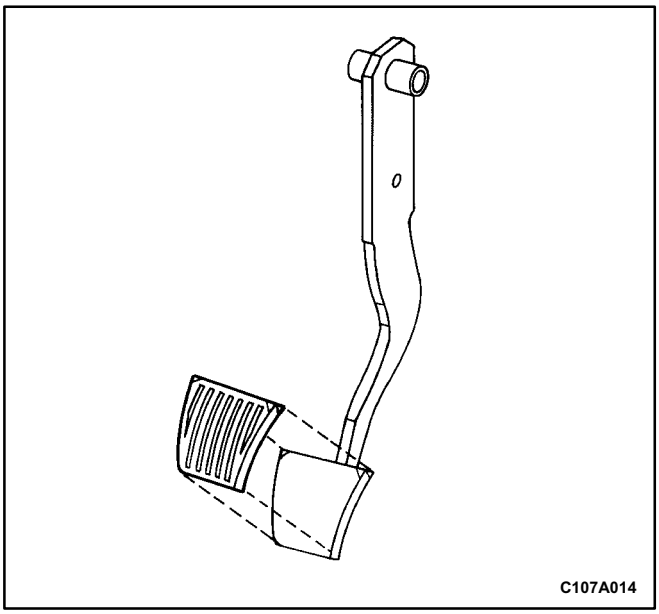

7. Remove the brake pedal cover (manual transaxle pedal shown).

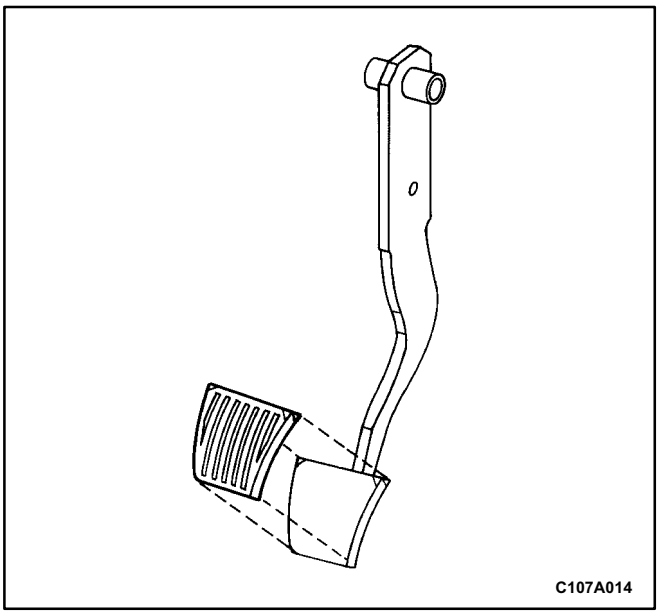

Installation Procedure

1. Install a new pedal cover (manual transaxle pedal shown), if needed.

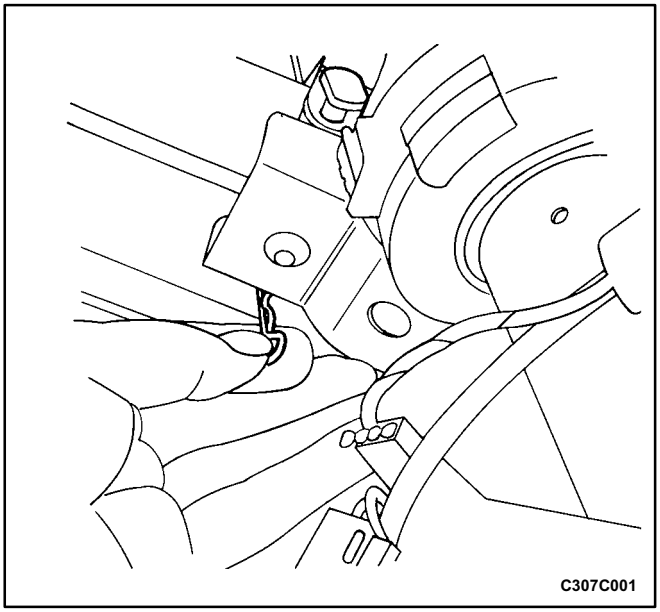

2. Coat the pedal shaft with grease.
3. Position the brake pedal on the pedal to dash panel bracket and the pedal bolt.
4. Place the hex nut and the spring on the pedal bolt.

   Tighten

   Tighten the brake pedal to pedal bracket hex nut to 18 N•m (13 lb•ft).
5. Install the push rod clevis to the pedal with the pin and the spring retaining clip.

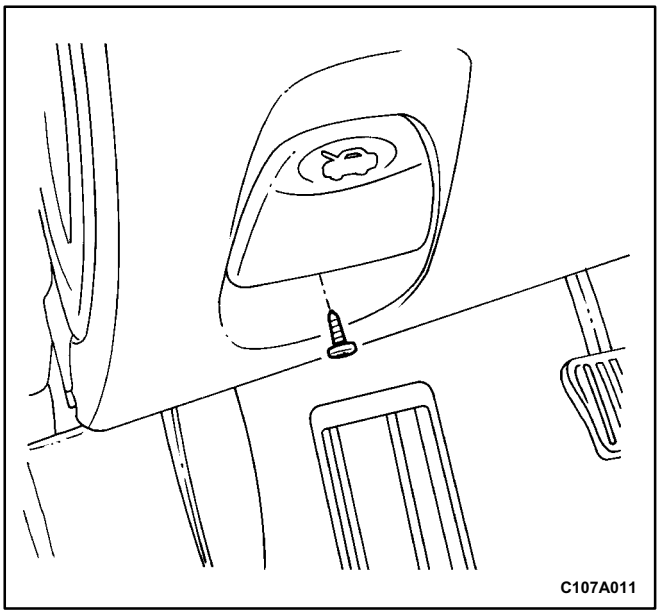

6. Connect the stoplamp switch and connector assembly to the pedal bracket. Refer to „Stoplamp Switch” in this section.
7. Install the trim panel with the screws.

   Tighten

   Tighten the trim panel screws to 3 N•m (27 lb•in).

GENERAL DESCRIPTION AND SYSTEM OPERATION

WARNING LAMP OPERATION

This brake system uses a BRAKE warning lamp located in the instrument panel cluster. When the ignition switch is in the START position, the BRAKE warning lamp should illuminate. It should go off when the ignition switch returns to the ON position.

The following conditions will activate the BRAKE warning lamp:

- The lamp should be on whenever the parking brake is applied and the ignition switch is in the ON position.
- A low fluid level in the master cylinder will turn the BRAKE lamp on.

SECTION 4B

MASTER CYLINDER

TABLE OF CONTENTS

Specifications 4B-1
Fastener Tightening Specifications 4B-1
Diagnosis 4B-1
Checking Brake Proportioning Valve 4B-1
Maintenance and Repair 4B-3
On-Vehicle Service 4B-3
Master Cylinder Assembly 4B-3
Brake Fluid Reservoir 4B-5
Proportioning Valves 4B-8
Unit Repair 4B-11
Master Cylinder Overhaul 4B-11
General Description and System Operation 4B-14
Master Cylinder 4B-14
Proportioning Valves 4B-14
Fluid Level Sensor 4B-14

SPECIFICATIONS

FASTENER TIGHTENING SPECIFICATIONS

Application	N•m	Lb•Ft	Lb•In
Master Cylinder Attaching Nuts	13	-	115
Master Cylinder Brake Lines	16	12	-
Proportioning Valve Brake Lines	10	-	89
Proportioning Valve Nut	10	-	89

DIAGNOSIS

CHECKING BRAKE PROPORTIONING VALVE

Use two brake pressure gauges to check the brake proportioning valves that are attached to the master cylinder on non ABS braking systems. These valves limit the outlet pressure to the rear brakes after a predetermined master cylinder pressure has been reached.

When checking the brake proportioning valves, be sure that the hydraulic line pressure is measured simultaneously and diagonally on the front and the rear axles. To measure the pressure, use the following steps:

1. Remove the bleeder valve and install a pressure gauge to one of the rear brake cylinders.
2. Install another bleeder valve and install another pressure gauge to the diagonally opposite front brake.
3. Build pressure by pressing firmly on the brake pedal several times. The pressure indicated on the gauge is not regulated and represents the actual brake system hydraulic pressure.
4. Build pressure until the test values in the following proportioning valve test chart are achieved.

Model	Reference Number for Gradient and Switching Pressure on the Valve Housing	Input Pressure Read on the Manometer at the Front Axle in kPa (psi)	Output Pressure Read on the Manometer at the Rear Axle in kPa (psi)
All	40 bar/0.25	500 (73)	500 (73)
		4 500 (653)	3 450 ±200 (500±29)
		10 000 (1,450)	5 100 ±300 (740±44)

Important: If the pressure exceeds 10 000 kPa (1,450 psi), the pressure reading on the rear gauge will not be accurate.

5. Remove the gauges from the tested brake circuit and repeat the test on the remaining circuit.

MAINTENANCE AND REPAIR

ON-VEHICLE SERVICE

MASTER CYLINDER ASSEMBLY

(Left–Hand Drive Shown, Right–Hand Drive Similar)

Removal Procedure

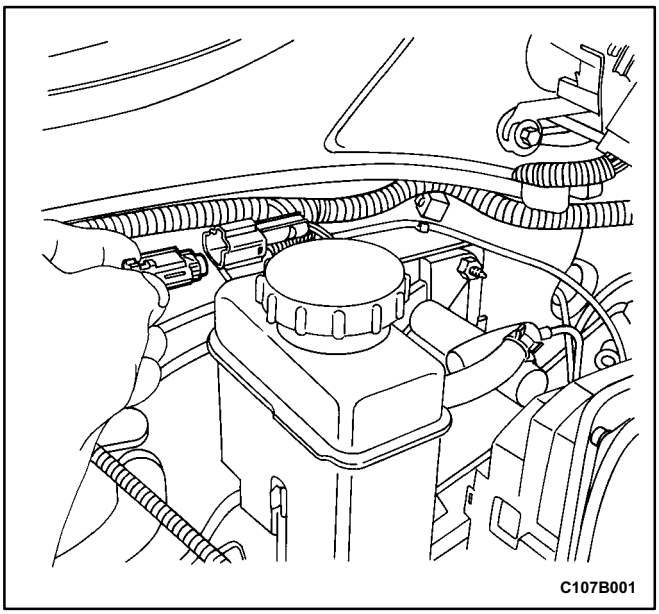

1. Remove the harness connector from its receptacle that is mounted to the top of the brake fluid reservoir.
2. Remove the receptacle by sliding it off its reservoir mount.

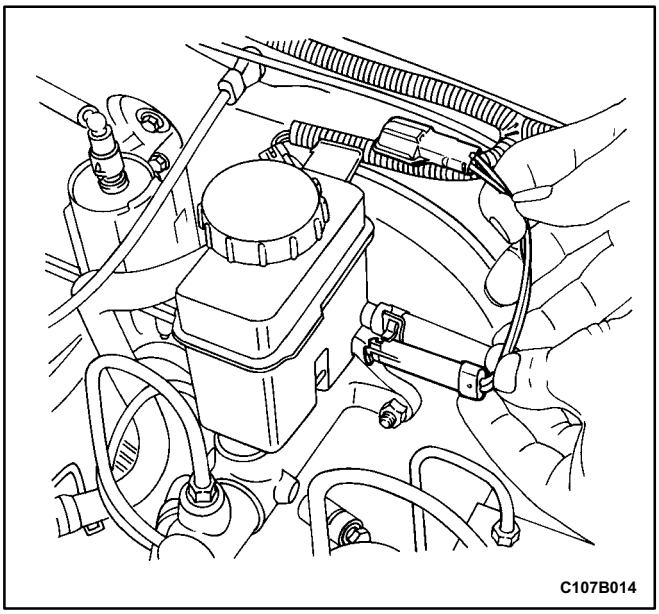

3. Crimp the plastic tabs of the low brake fluid level switch on the engine side of the brake fluid reservoir.
4. While crimping the plastic tabs, pull the switch out from the other side of the reservoir.

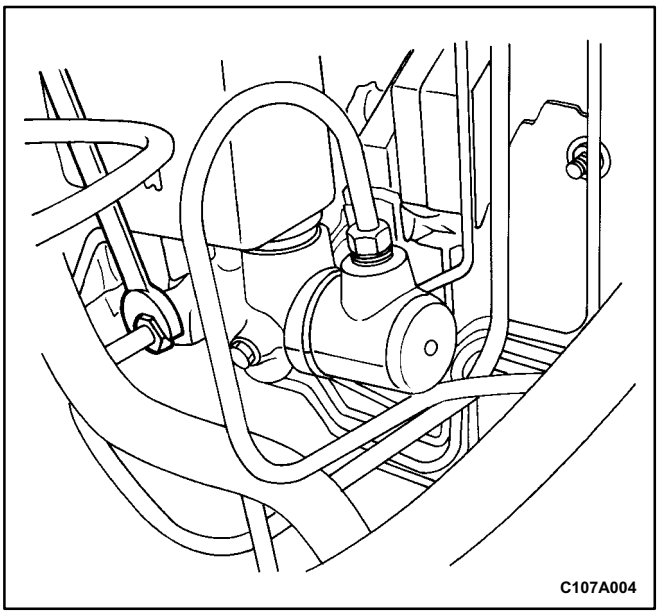

5. Disconnect the brake lines from the master cylinder body.
6. For vehicles with the manual transaxle, disconnect the clip that secures the clutch hose connection to the master cylinder and move the clip out of the way.
7. Remove the clutch hose from the master cylinder.
8. Plug the opening to the brake lines to prevent the loss and the contamination of the fluid.

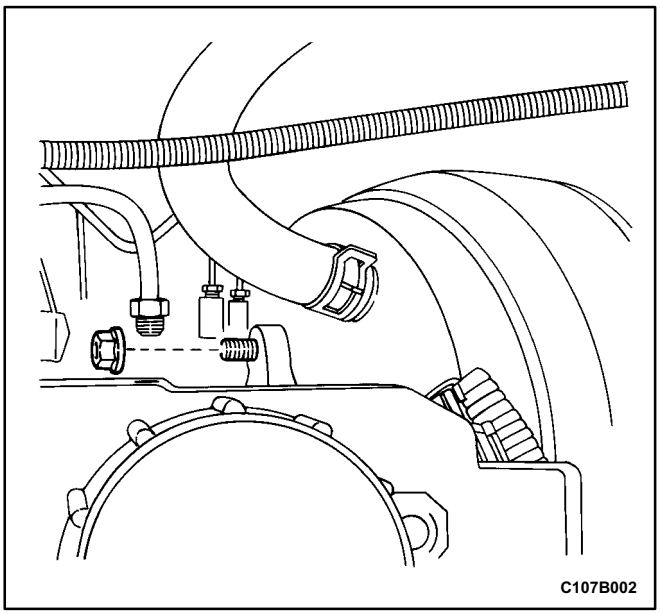

9. Remove the master cylinder attaching nuts.
10. Remove the master cylinder assembly.
11. Drain the brake fluid.

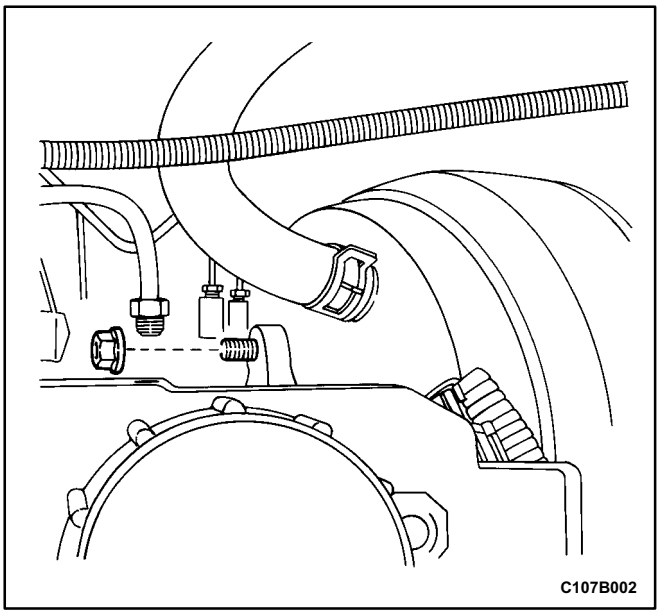

Installation Procedure

1. Install the master cylinder assembly with the new attaching nuts.

   Tighten

   Tighten the master cylinder attaching nuts to 13 N•m (115 lb•in).

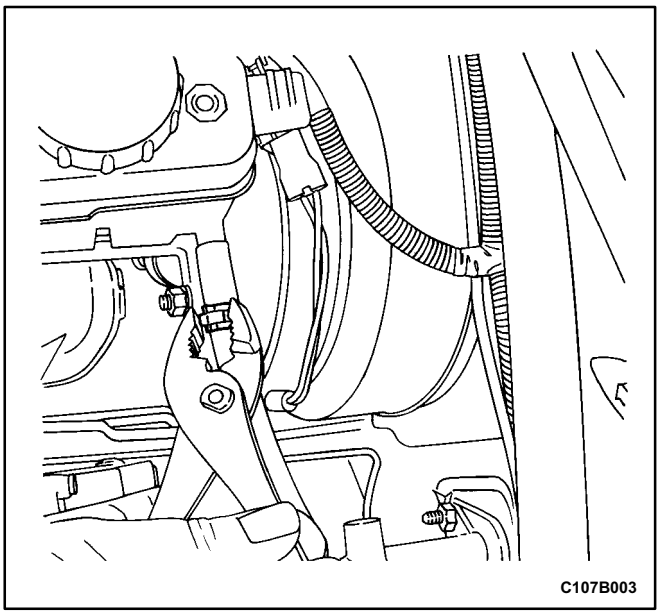

2. Install the brake lines to the master cylinder body.

   Tighten

   Tighten the master cylinder brake lines to 10 N•m (89 lb•in).

3. For vehicles with the manual transaxle, install the clutch hose connection to the master cylinder with the clip.

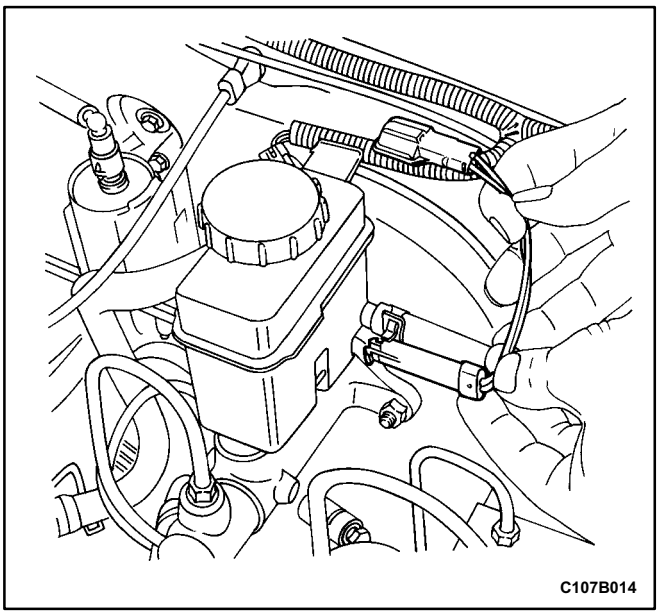

4. Install the low brake fluid level switch by pushing it into the side of the brake fluid reservoir opposite the engine.

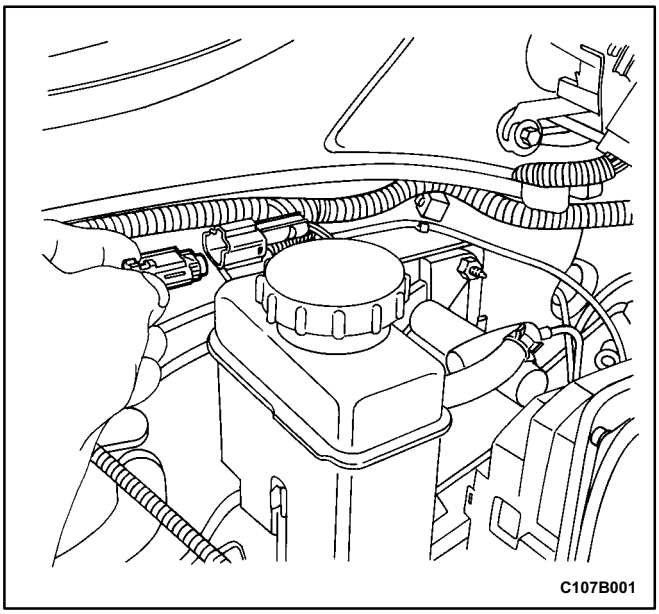

5. Install the receptacle for the low brake fluid level switch assembly by sliding it into its mount on the top of the brake fluid reservoir.
6. Plug in the harness connector.
7. Add the brake fluid.
8. Check for leaks.
9. Recheck the fluid level.
10. Bleed the brake system. Refer to *Section 4A, Hydraulic Brakes*.

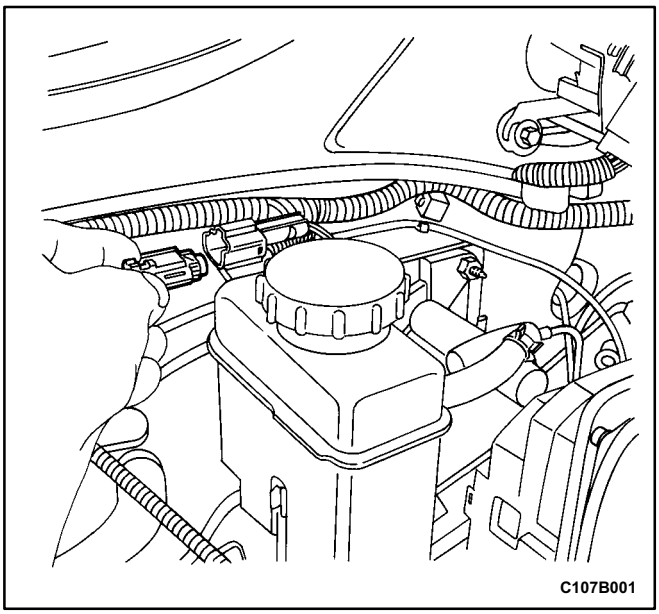

BRAKE FLUID RESERVOIR

(Left-Hand Drive Shown, Right-Hand Drive Similar)

Removal Procedure

Important: Remove the brake fluid reservoir only when it must be replaced because of damage or leaks.

1. Remove the harness connector from its receptacle that is mounted to the top of the brake fluid reservoir.
2. Remove the receptacle by sliding it off its reservoir mount.

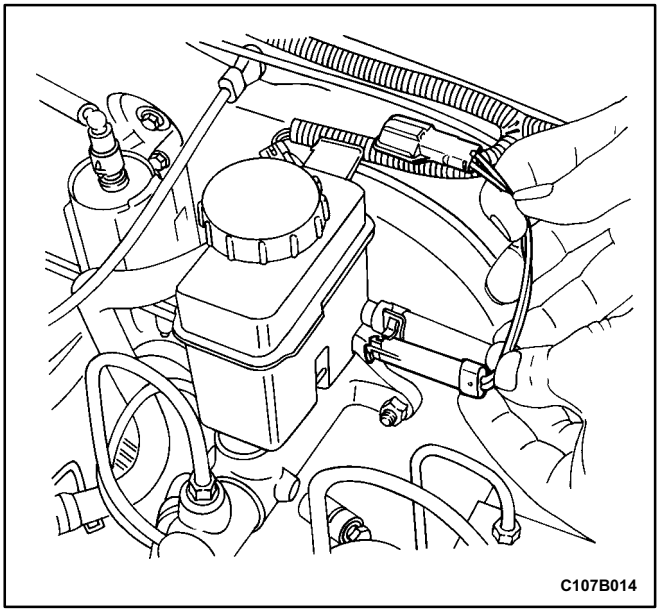

3. Crimp the plastic tabs of the low brake fluid level switch on the engine side of the brake fluid reservoir.
4. While crimping the plastic tabs, pull the switch out from the other side of the reservoir.

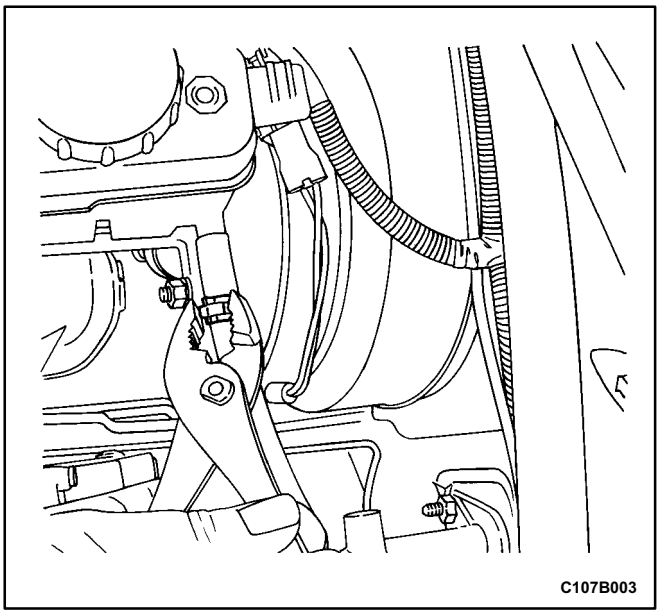

5. For vehicles with the manual transaxle, disconnect the clip that secures the clutch hose connection to the master cylinder and move the clip out of the way.
6. Remove the clutch hose from the master cylinder.

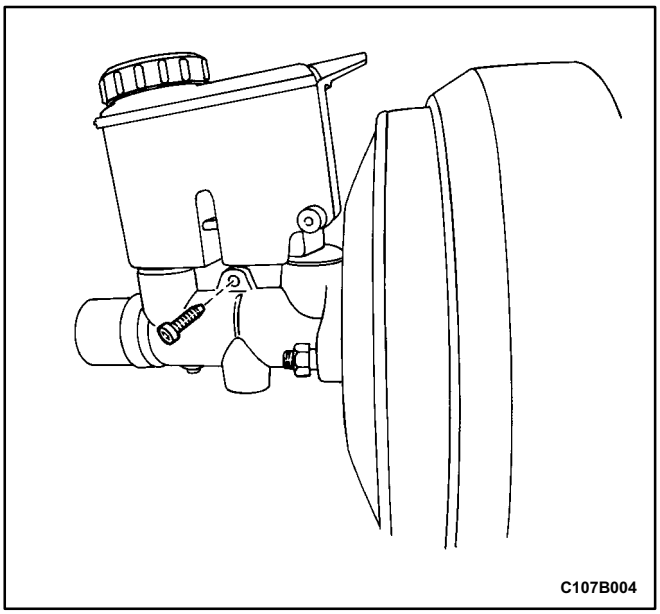

7. Remove the screw that holds the brake fluid reservoir to the master cylinder body.
8. Remove the reservoir from the retaining clamps by gently prying the reservoir upward with a screwdriver.
9. Remove the brake fluid reservoir from the master cylinder body by tilting the reservoir and pulling it upward.

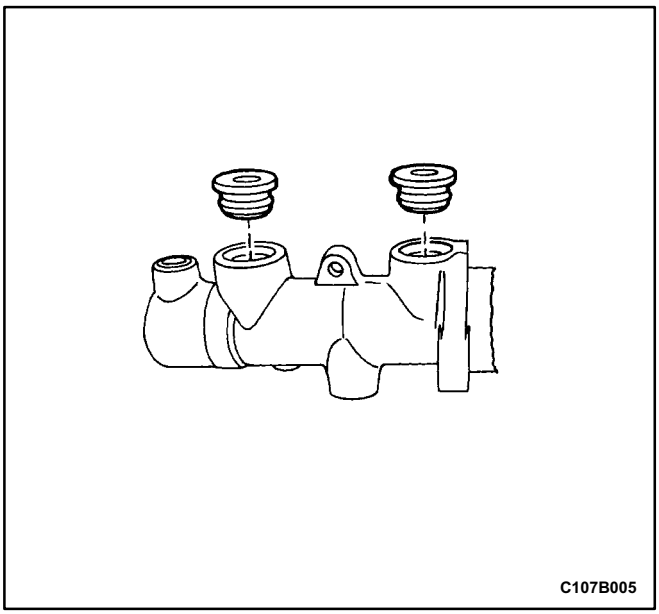

10. Remove the brake fluid reservoir seals from the master cylinder body.

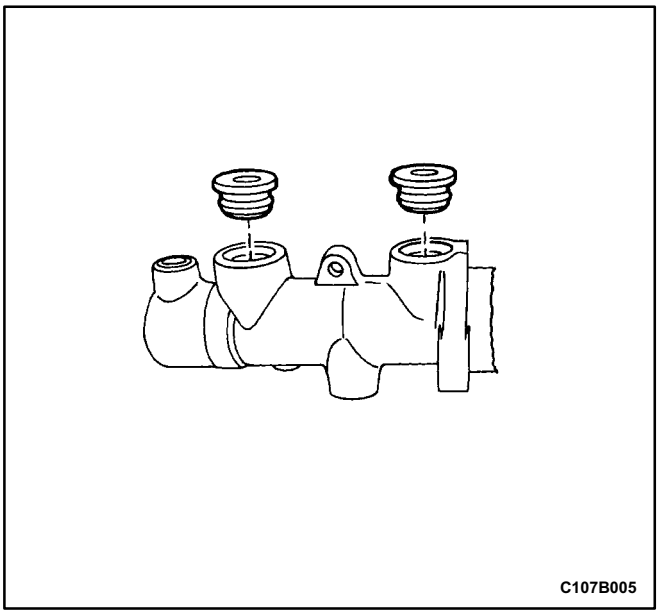

Installation Procedure

1. Lubricate the new brake fluid reservoir seals with clean brake fluid.
2. Install the brake fluid reservoir seals into the master cylinder body.
3. Install the brake fluid reservoir onto the master cylinder body with the clamps.

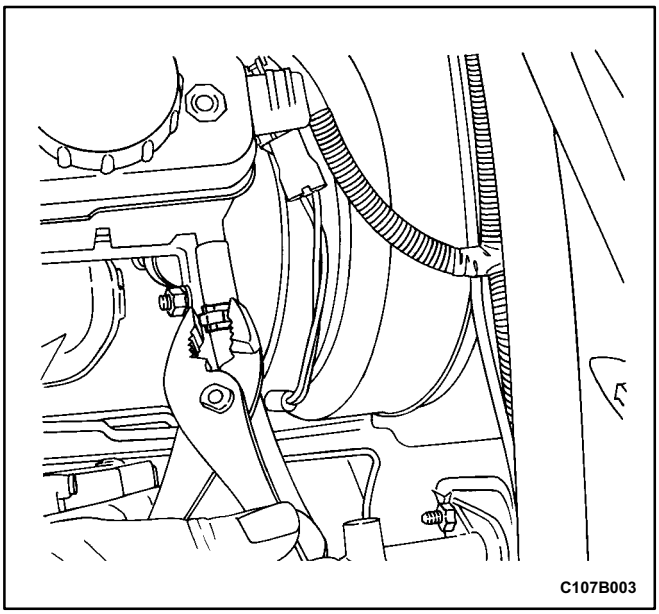

4. For vehicles with the manual transaxle, install the clutch hose connection to the master cylinder with the clip.

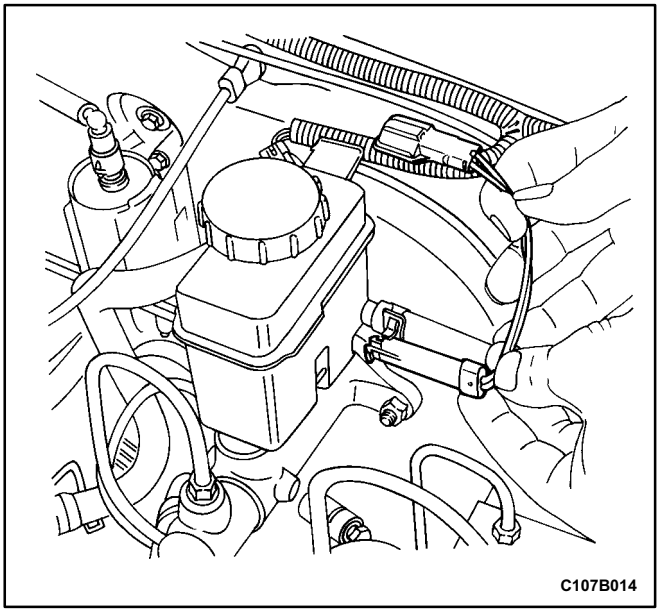

5. Add the brake fluid.
6. Raise and suitably support the vehicle.
7. Bleed the braking system. Refer to *Section 4A, Hydraulic Brakes.*
8. Bleed the clutch master cylinder. Refer to *Section 5C, Clutch.*
9. Lower the vehicle.
10. Install the low brake fluid level switch by pushing it into the side of the brake fluid reservoir opposite the engine.

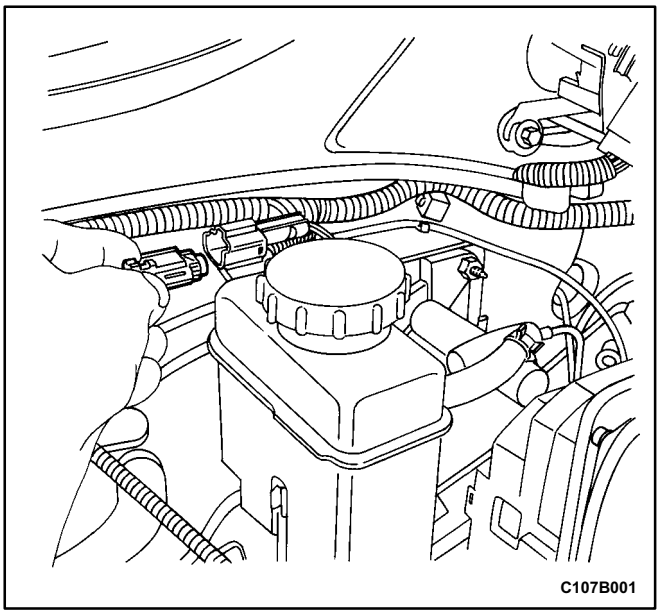

11. Install the receptacle for the low brake fluid level switch assembly by sliding it into its mount on the top of the brake fluid reservoir.
12. Plug in the harness connector.

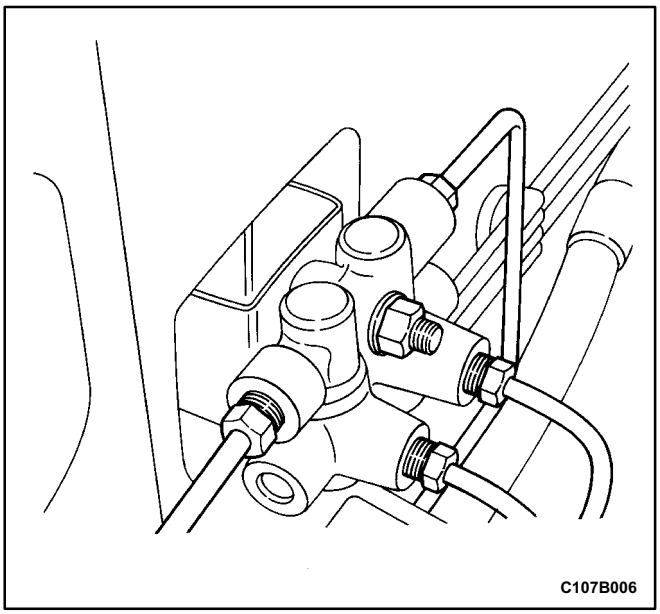

PROPORTIONING VALVES

(Left-Hand Drive Shown, Right-Hand Drive Similar)

Removal Procedure

1. Disconnect the brake lines from the proportioning valves. (The ABS proportioning valve is shown.)
2. Remove the nut that secures the proportioning valve to the bulkhead.

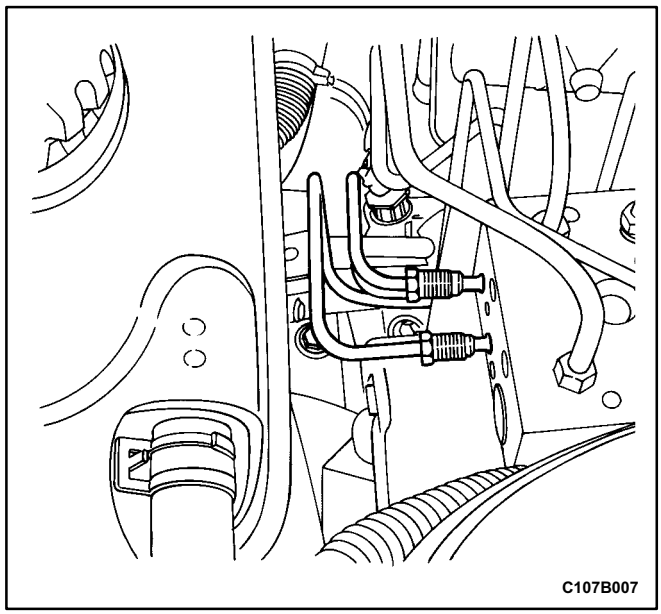

3. For ABS equipped vehicles, remove the brake lines from the hydraulic modulator.

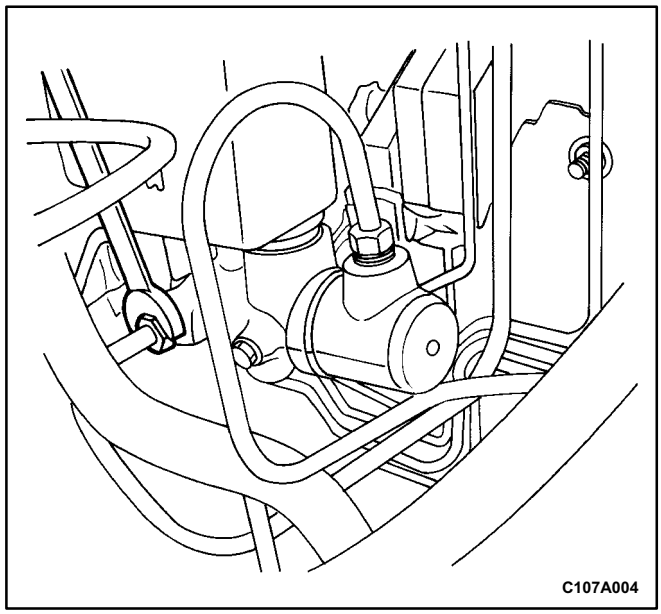

4. For non ABS equipped vehicles, remove the brake lines from the master cylinder.
5. Unsnap the brake lines from the brackets along the bulkhead.

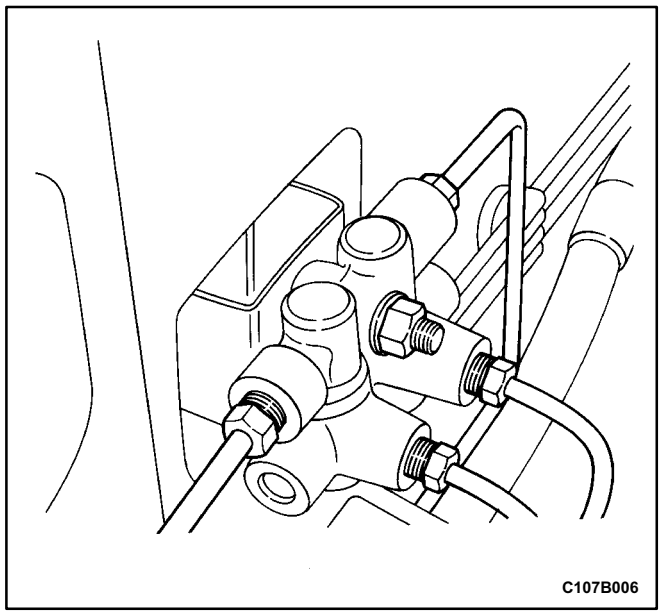

Installation Procedure

1. Install the proportioning valve to the bulkhead. (The ABS proportioning valve is shown.)

   Tighten

   Tighten the proportioning valve nut to 10 N•m (89 lb•in).

2. Connect the brake lines to the proportioning valve.

   Tighten

   Tighten the proportioning valve brake lines to 10 N•m (89 lb•in).

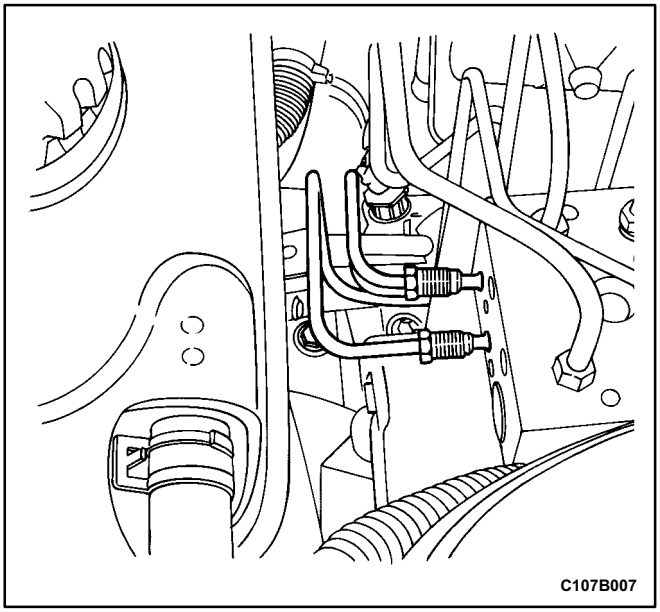

3. For ABS equipped vehicles, install the brake lines to the hydraulic modulator.

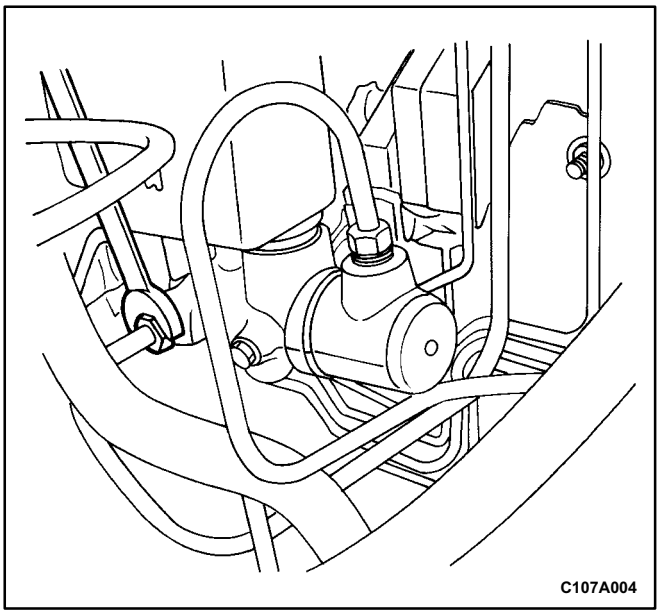

4. For non ABS equipped vehicles, install the brake lines to the master cylinder.
5. Raise and suitably support the vehicle.
6. Bleed the braking system. Refer to *Section 4A, Hydraulic Brakes*.
7. Lower the vehicle.

UNIT REPAIR

MASTER CYLINDER OVERHAUL

Disassembly Procedure

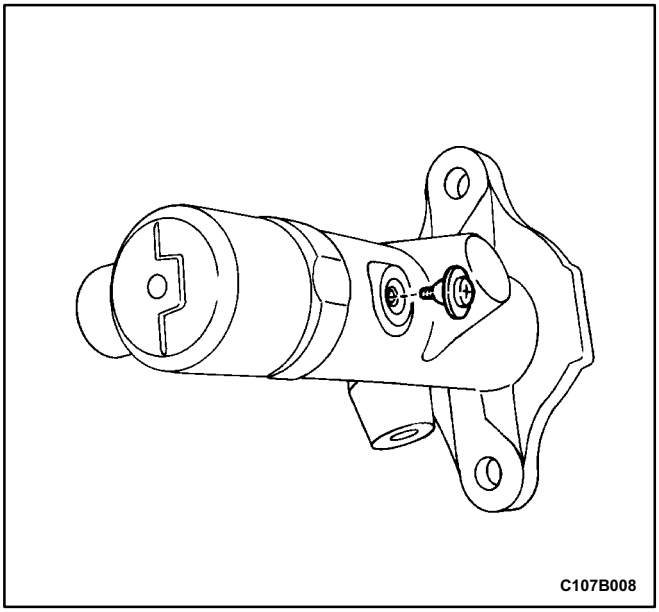

1. Remove the master cylinder. Refer to „Master Cylinder Assembly" in this section.
2. Remove the brake fluid reservoir. Refer to „Brake Fluid Reservoir" in this section.
3. Remove the retaining screw (if equipped) from the cylinder.

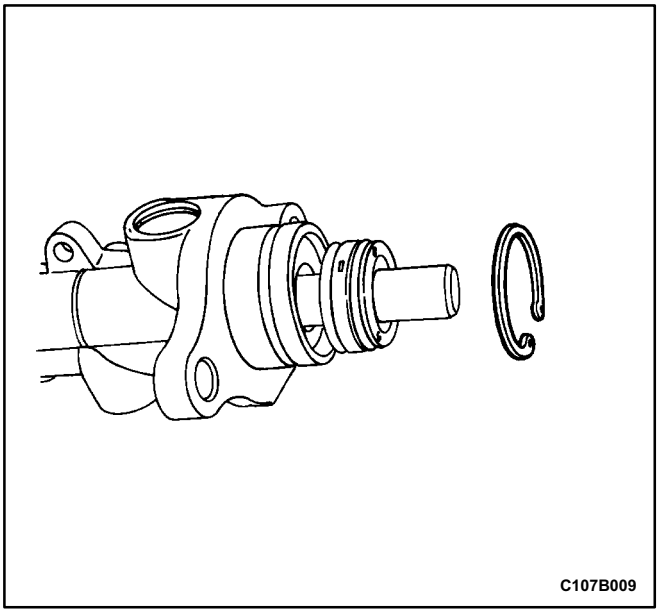

Notice: When removing the retaining ring, avoid damaging the piston or the cylinder wall.

4. Remove and discard the retaining ring from the cylinder body by pressing the hollow shaft and using needlenosed pliers to grasp and squeeze the retaining ring.

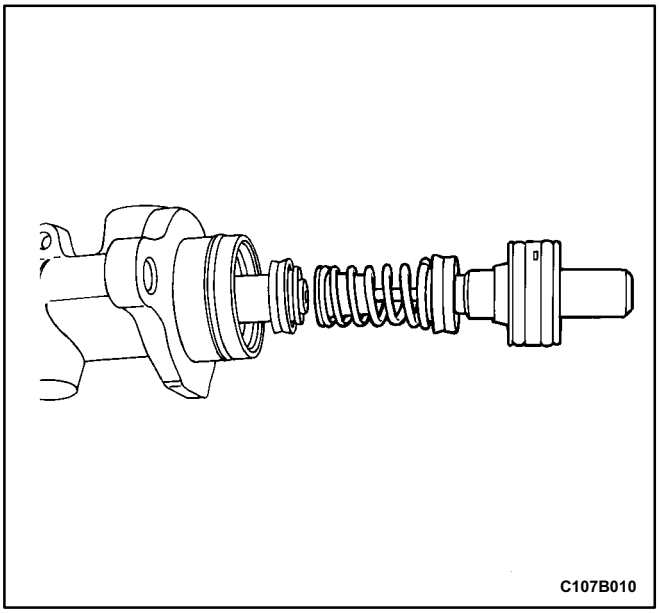

5. Remove the washer and the primary piston assembly.

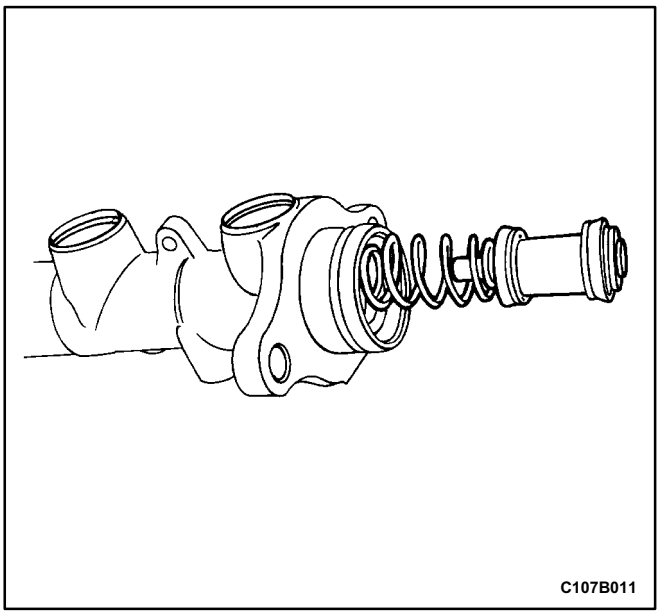

6. Carefully remove the secondary piston assembly, including the spring, from the master cylinder bore.

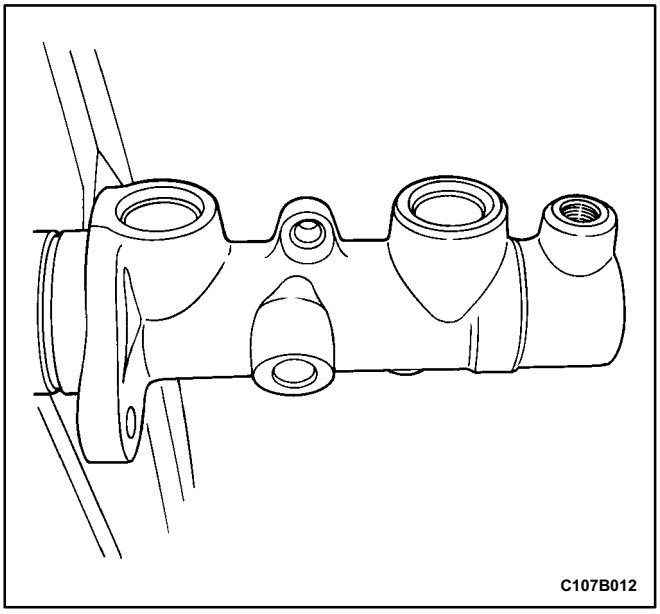

Assembly Procedure

Notice: Do not use abrasives in the master cylinder bore. Abrasives can damage the bore.

Important: Rubber parts and retaining rings must be discarded and replaced with new parts.

1. Clean all the parts with denatured alcohol or clean brake fluid. Dry the parts with compressed air.
2. Inspect the master cylinder bore for scoring or corrosion. If scoring or corrosion is evident, replace the master cylinder body.
3. Lubricate the master cylinder bore with clean brake fluid. (The non ABS master cylinder is shown.)

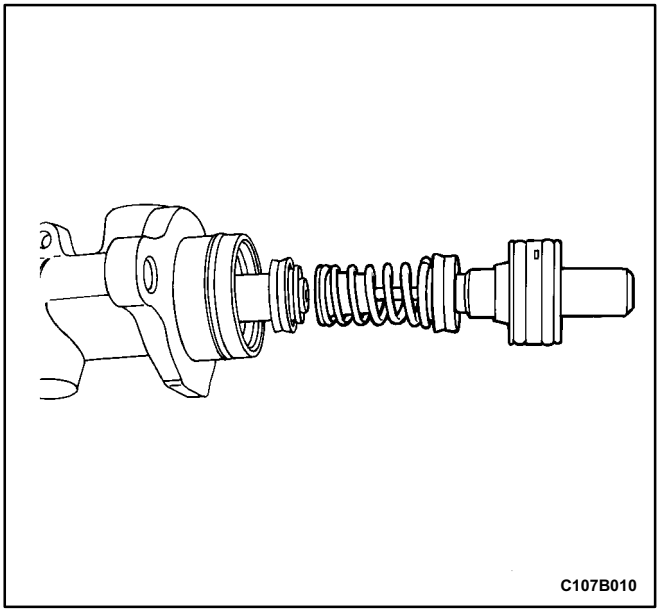

4. Carefully insert the secondary piston assembly bore until the secondary piston contacts the base of the cylinder body. Use a wood or a plastic drift, if necessary.
5. Insert the primary piston assembly and the washer.

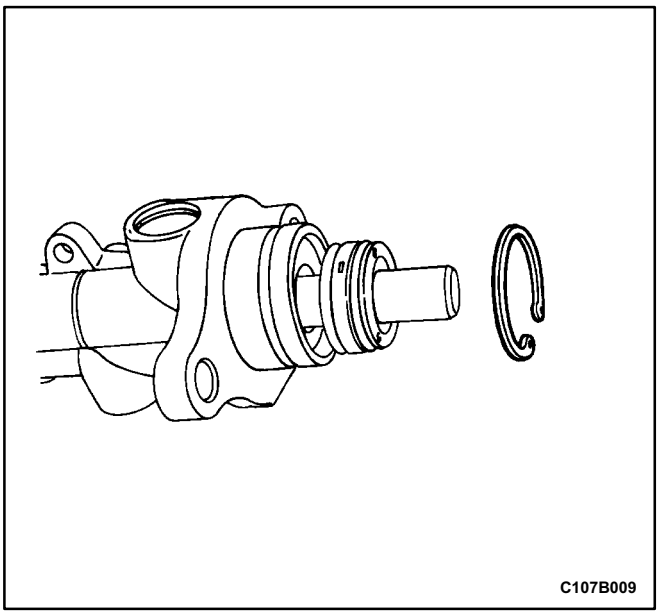

Notice: When installing the washer and the new retaining ring, take care not to damage the cylinder bore.

6. Press the pistons into the cylinder bore using a wooden or a plastic drift.
7. Insert the washer and the new retaining ring into the groove in the cylinder bore.

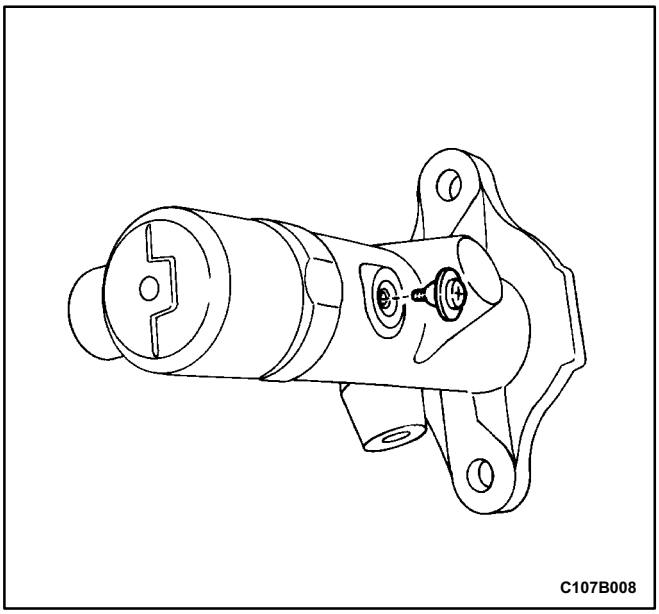

8. Install the retaining screw (if equipped) in bottom of the master cylinder and tighten it until it bottoms out on the internal piston assembly.

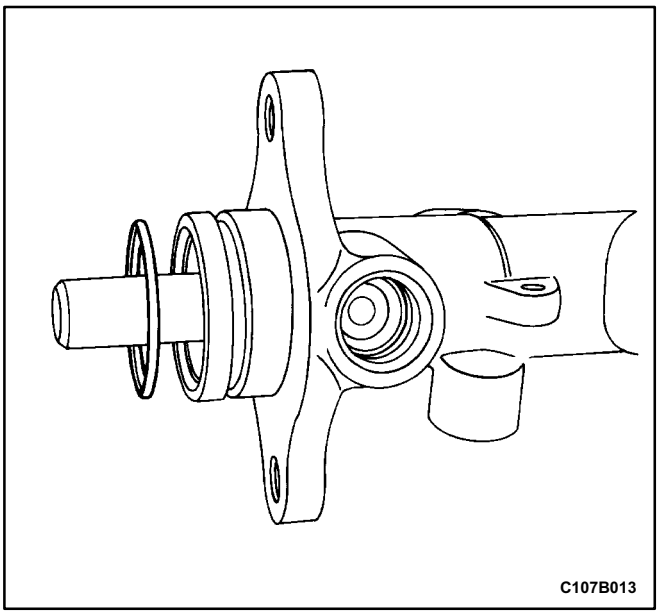

9. Insert a new O-ring over the cylinder body.
10. Install the brake fluid reservoir onto the master cylinder. Refer to „Brake Fluid Reservoir” in this section.
11. Install the master cylinder assembly. Refer to the „Master Cylinder Assembly” in this section.
12. Raise and suitably support the vehicle.
13. Bleed the braking system. Refer to *Section 4A, Hydraulic Brakes.*
14. Lower the vehicle.

GENERAL DESCRIPTION AND SYSTEM OPERATION

MASTER CYLINDER

The master cylinder is designed for use in a diagonally split system. One front and one diagonally opposite rear brake are served by the primary piston. The opposite front and rear brakes are served by the secondary piston. The master cylinder incorporates the functions of the standard dual master cylinder, plus a low fluid level indicator and the proportioning valves. The proportioning valves limit the outlet pressure to the rear brakes after a predetermined master cylinder pressure has been reached.

Notice: Do not use lubricated shop air on the brake parts, as this may damage the rubber components.

Important:

- Replace all the components included in the repair kits used to service this master cylinder.
- Lubricate the rubber parts with clean brake fluid to ease assembly.
- If any hydraulic component is removed or disconnected, it may be necessary to bleed all or part of the brake system.
- The torque values specified are for dry, unlubricated fasteners.
- Perform all service operations on a clean bench, free from all traces of mineral oil.

PROPORTIONING VALVES

The proportioning valves limit the outlet pressure to the rear brakes after a predetermined master cylinder pressure has been reached. This is used when less rear application force is needed to obtain optimum braking.

FLUID LEVEL SENSOR

The master cylinder is equipped with a fluid level sensor. This sensor will activate the BRAKE light if a low fluid level condition is detected. Once the fluid level is corrected, the BRAKE light will go out.

SECTION 4C

POWER BOOSTER

TABLE OF CONTENTS

Specifications **4C-1**
Fastener Tightening Specifications 4C-1
Diagnosis **4C-1**
Power Booster Functional Check 4C-1
Maintenance and Repair **4C-2**
On-Vehicle Service 4C-2
Vacuum Hose 4C-2
Power Booster Assembly 4C-3
General Description and System Operation **4C-9**
Power Booster 4C-9

SPECIFICATIONS

FASTENER TIGHTENING SPECIFICATIONS

Application	N•m	Lb•Ft	Lb•In
Booster to Dash Panel Nuts	22	16	-
Booster Pushrod Hex Nut	18	13	-
Pushrod Clevis	18	13	-

DIAGNOSIS

POWER BOOSTER FUNCTIONAL CHECK

1. With the engine stopped, eliminate vacuum in the booster by pumping the brake pedal several times.
2. Push the pedal down and hold in this position.
3. Start the engine.
4. The booster is OK if the pedal drops further because of extra force produced.

If the brake pedal does not drop, the vacuum system (vacuum hoses, check valve, etc.) is probably defective and should be checked.

If no defect is revealed by checking the vacuum system, the defect is in the booster itself.

MAINTENANCE AND REPAIR

ON-VEHICLE SERVICE

VACUUM HOSE

Removal Procedure

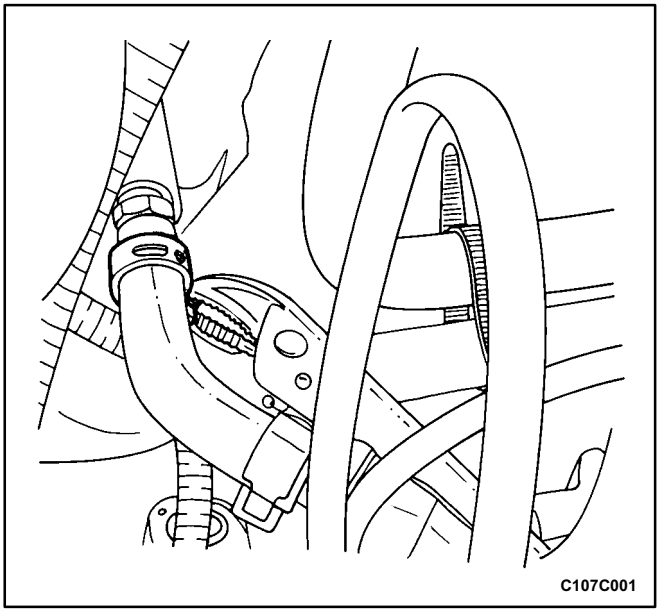

1. For vehicles with a DOHC engine, remove the clip on the vacuum hose connection at the intake manifold.
2. Pull the hose from the union nut connection. If the hose does not remove easily or is deteriorated, pry off and discard the hose.
3. For vehicles with an SOHC engine, similarly remove the clip on the vacuum hose nut connection to the intake manifold.
4. Pull the hose from the union nut connection. If the hose does not remove easily or is deteriorated, pry off and discard the hose.

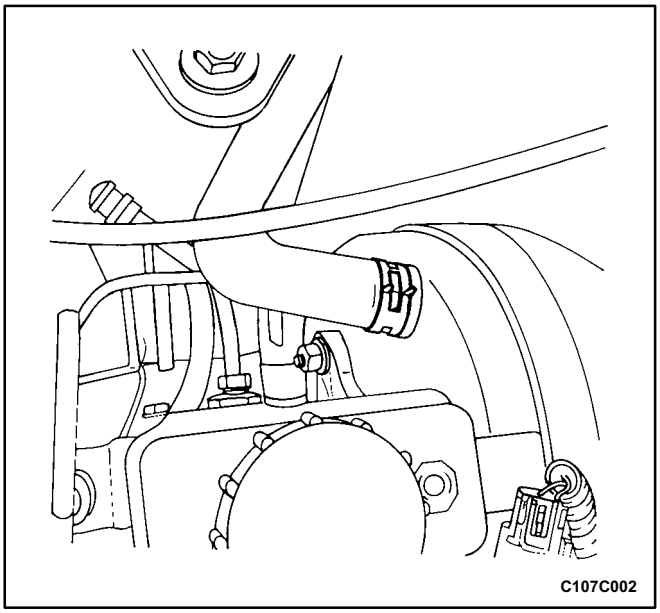

5. Remove the clip on the vacuum hose connection to the brake booster.
6. Remove the vacuum hose.

Installation Procedure

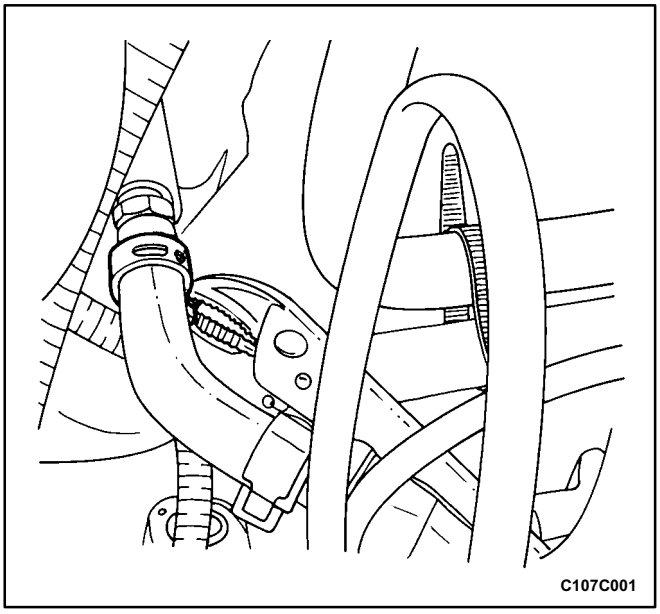

1. Mount the vacuum hose (DOHC engine connection shown), and ensure the connections are tight on each end.
2. Install the vacuum hose clips.
3. Check the function of the booster. Refer to the „Power Booster Functional Check” in this section.

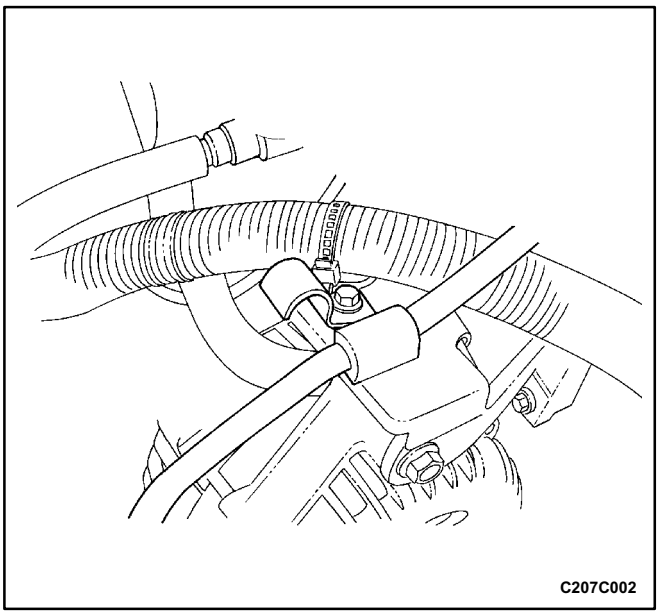

POWER BOOSTER ASSEMBLY

(Left-Hand Drive Shown, Right-Hand Drive Similar)

Removal Procedure

1. For right-hand drive vehicles, remove the air intake tube. Refer to *Section 1C, DOHC Egnine mechanical* and *Section 1B, SOHC Engine Mechanical.*
2. For right-hand drive veicles, loose the retaining clip located above the alternator and piston it away from the pressure line.

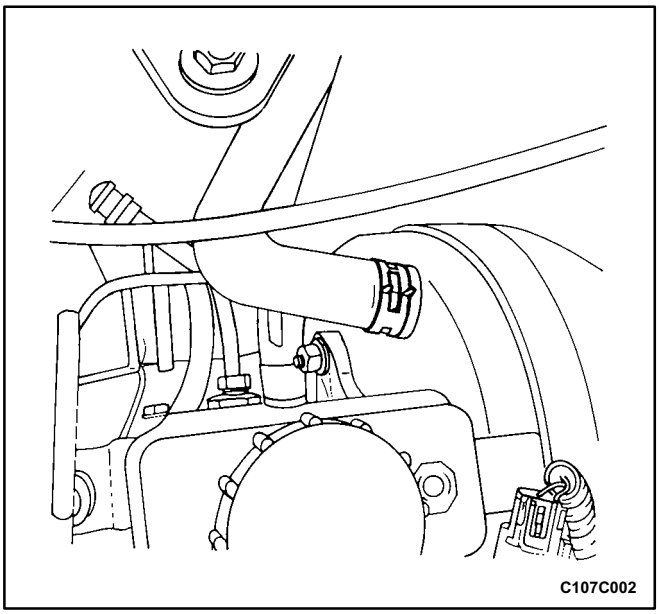

3. Remove the master cylinder. Refer to *Section 4B, Master Cylinder*.
4. Remove the clamp on the vacuum hose connection to the booster (DOHC engine shown).
5. Remove the vacuum hose from the booster. Refer to „Vacuum Hose” in this section.

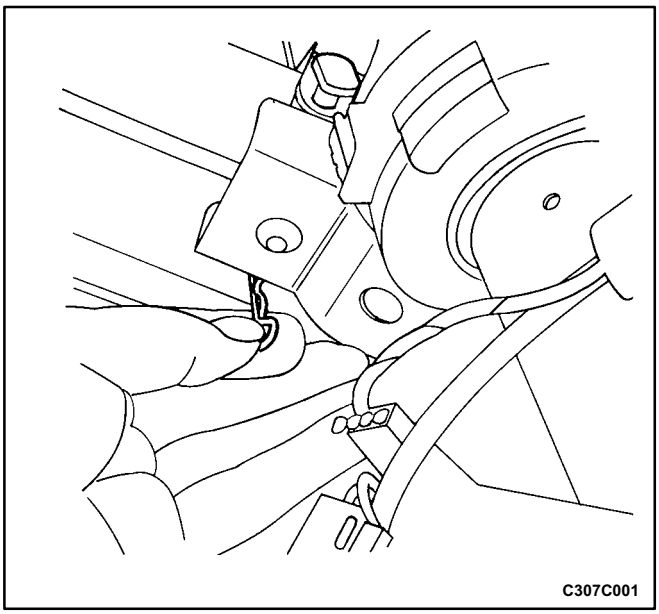

6. Disconnect the brake stoplamp switch. Refer to *Section 4A, Hydraulic Brakes*.
7. Remove the brake pedal spring.
8. Disconnect the clip and remove the pushrod pin from the pedal bracket assembly.

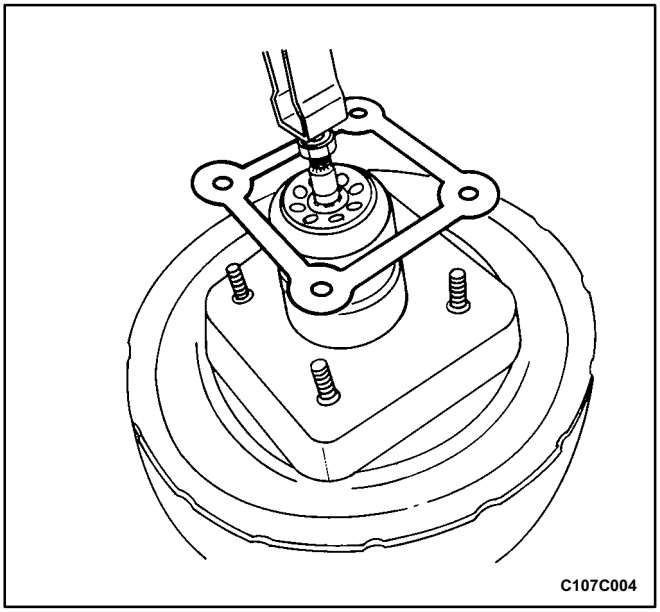

9. Remove the booster mounting nuts from the studs protruding from the dash panel, and remove the booster.
10. Remove and discard the gasket.

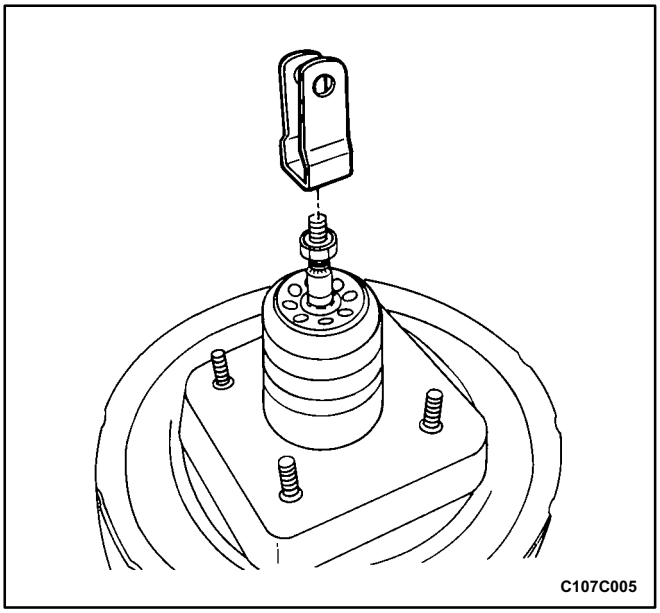

11. Remove the pushrod clevis.

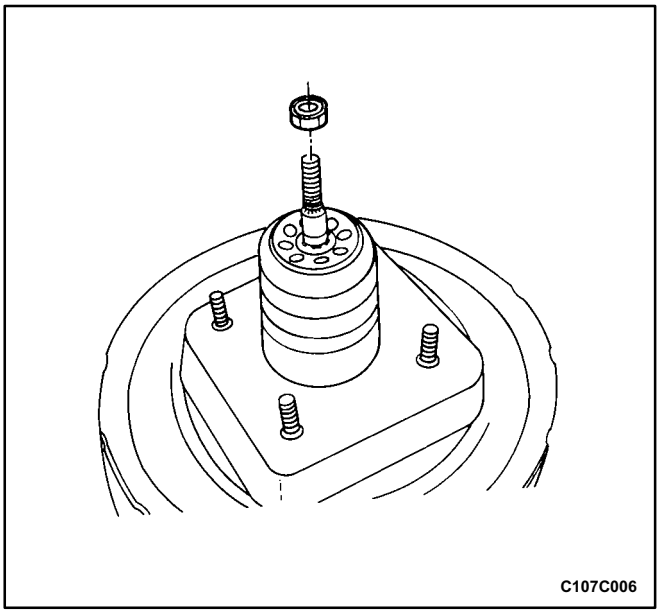

12. Remove the hex nut from the pushrod.

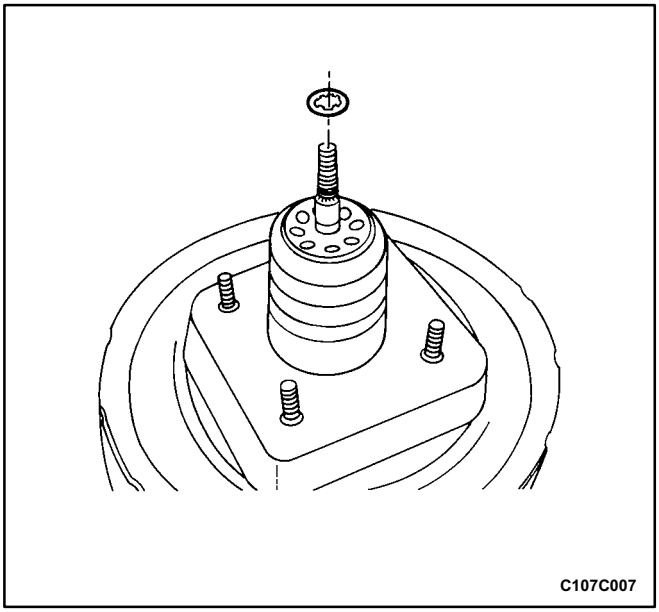

13. Remove the spring clip.

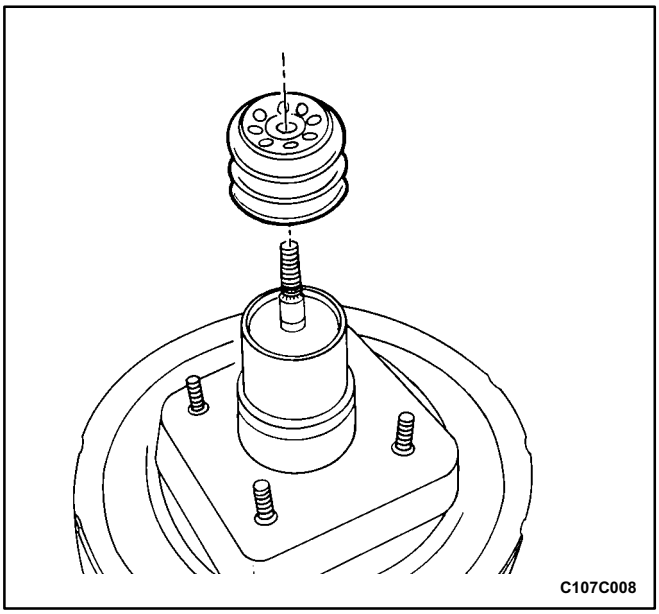

14. Remove the rubber boot and the packings.
15. Discard the rubber boot, if deteriorated, and discard the packings.

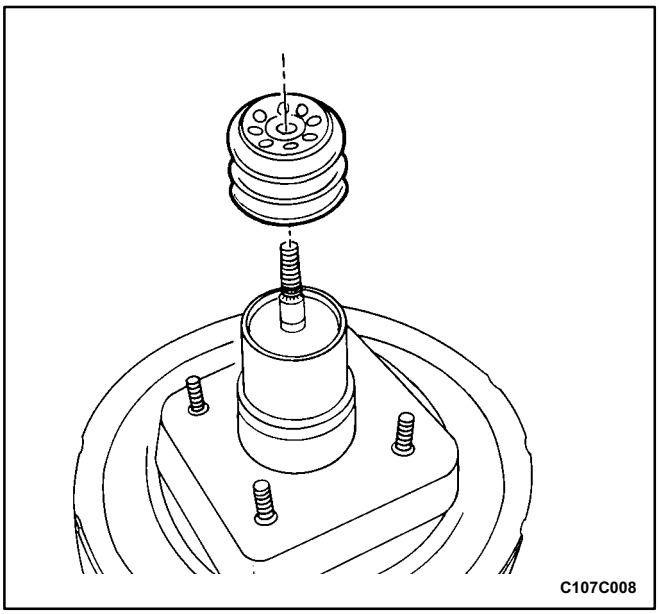

Installation Procedure

1. Check the pushrod and the pushrod clevis for damage and proper fit.
2. Install the new foam rubber and fiber packings, and install the new rubber boot on the booster shaft.

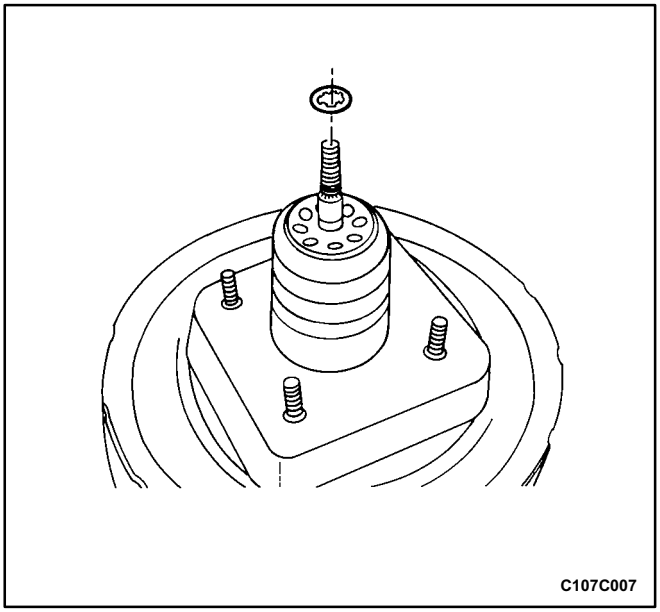

3. Install the spring clip.

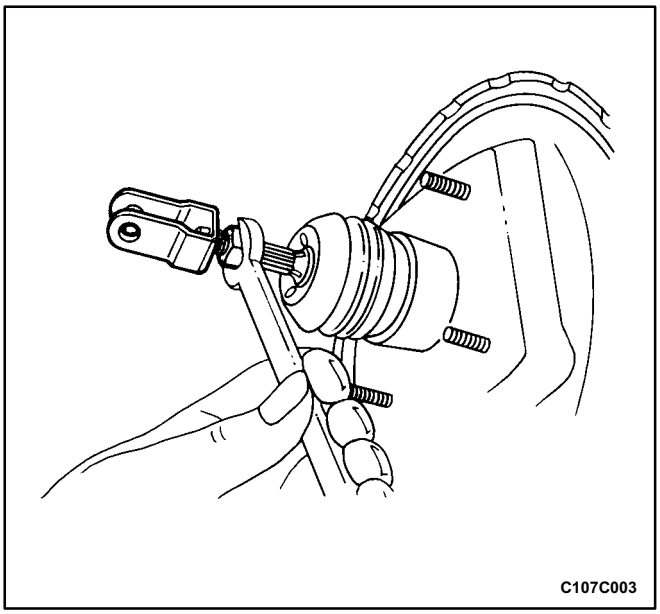

4. Install the hex nut and the pushrod clevis.

Tighten

Tighten the booster pushrod hex nut to 18 N•m (13 lb•ft).

Tighten the pushrod clevis to 18 N•m (13 lb•ft).

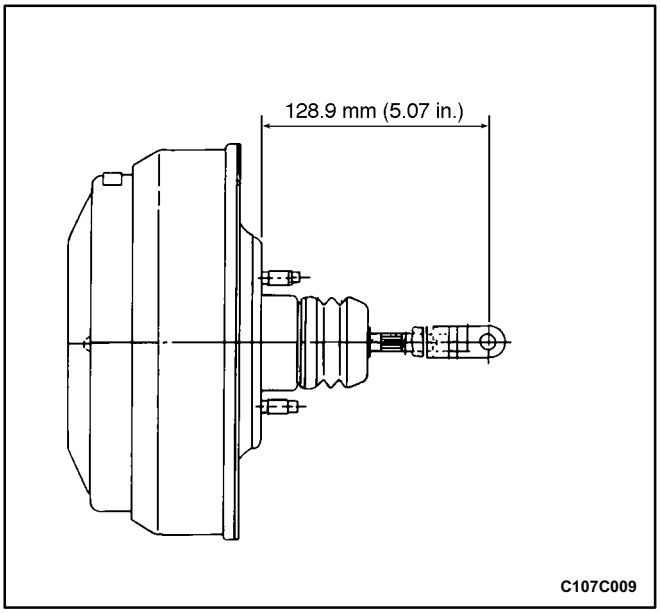

5. Measure the distance from the booster to the center of the fork bin bore.

Important: This measurement should be 128.9 mm (5.07 inches).

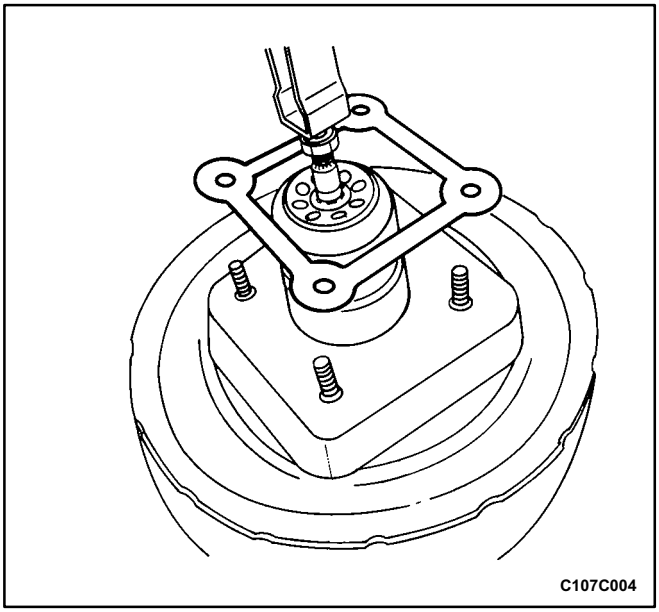

6. Install the new gasket.
7. Install the booster and the mounting nuts to the dash panel.

Tighten

Tighten the booster to dash panel nuts to 22 N•m (16 lb•ft).

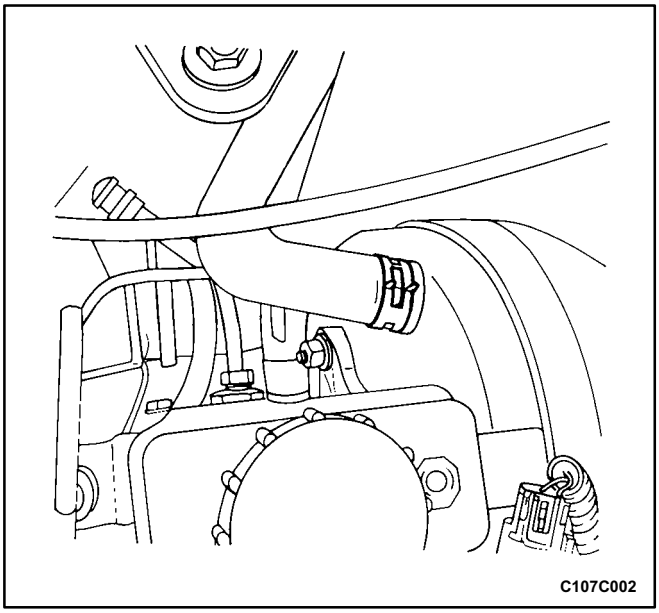

8. Install the master cylinder onto the booster. Refer to *Section 4B, Master Cylinder*.
9. Install the new vacuum hose to the booster (DOHC engine shown). Refer to „Vacuum Hose" in this section.
10. Install the hose clamp on the vacuum hose.

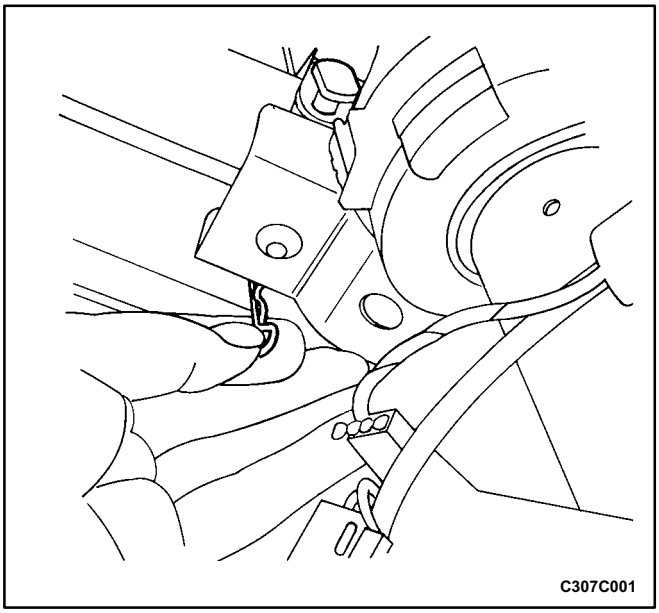

11. Install the pushrod pin to the brake pedal bracket assembly and connect the clip and the spring.
12. Connect the brake stoplamp switch. Refer to *Section 4A, Hydraulic Brakes*.

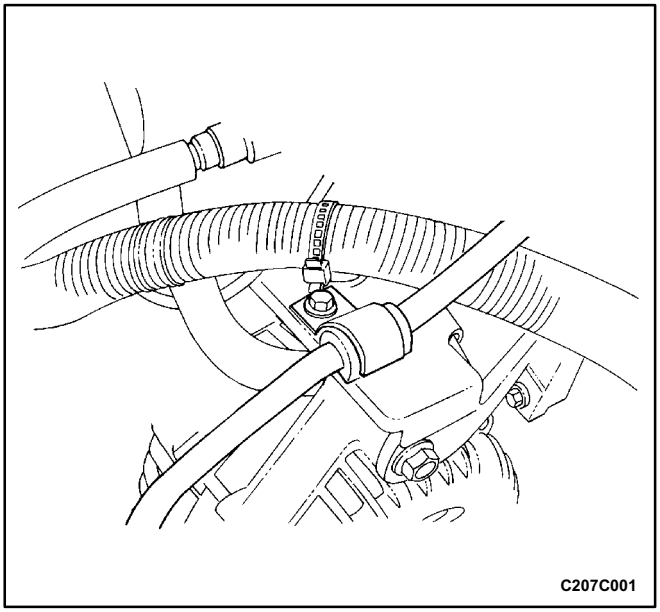

13. For right-hand drive vehicles, secure the pressure line with the retaining clip located above the alternator.

14 For right-hand drive vehicles, install the air intake tube. Refer to *Section 1C, DOHC Engine Mechanical* and *Section 1B, SOHC Engine Mechanical.*

GENERAL DESCRIPTION AND SYSTEM OPERATION

POWER BOOSTER

This booster is a single diaphragm, vacuum suspended unit. In a normal operating mode, with the service brakes in the release position, a vacuum suspended booster operates with a vacuum on both sides of its diaphragm. When the brakes are applied, air at atmospheric pressure is admitted to one side of the diaphragm to provide the power assist. When the brakes are released, atmospheric air is shut off from that side of the diaphragm. The air is then drawn from the booster through the vacuum check valve by the vacuum source.

Important: If any hydraulic component is removed or disconnected, it may be necessary to bleed all or part of the brake system.

SECTION 4D

FRONT DISC BRAKES

TABLE OF CONTENTS

Specifications **4D-1**
Fastener Tightening Specifications 4D-1
Diagnosis **4D-1**
Lining Inspection 4D-1
Rotor Inspection 4D-1
Maintenance and Repair **4D-3**
On-Vehicle Service 4D-3
Shoe and Lining (Brake Pads) 4D-3
Caliper Assembly 4D-4
Rotor 4D-6
Splash Shield 4D-7
Unit Repair 4D-8
Caliper Overhaul 4D-8
General Description and System Operation **4D-11**
Disc Brake Caliper Assembly 4D-11

SPECIFICATIONS

FASTENER TIGHTENING SPECIFICATIONS

Application	N•m	Lb•Ft	Lb•In
Brake Hose Inlet Fitting to Caliper Bolt	40	30	-
Caliper Bleeder Valve	6	-	53
Caliper to Steering Knuckle Mounting Bolts	95	70	-
Retaining Frame to Caliper Housing Bolts	27	19	-
Rotor to Front Wheel Hub Detent Screw	4	-	35
Splash Shield to Steering Knuckle Bolts	25	18	-

DIAGNOSIS

LINING INSPECTION

1. Raise and suitably support the vehicle.
2. Remove the front wheels. Refer to *Section 2E, Tires and Wheels*.
3. Visually check the linings for minimum thickness and wear.
4. Measure the thickness.

Important: The minimum thickness of the inner or the outer pad is 7 mm (0.28 inch).

5. Install the brake pads in axle sets only.
6. Install the front wheels. Refer to *Section 2E, Tires and Wheels*.
7. Lower the vehicle.

ROTOR INSPECTION

Thickness variation can be checked by measuring the thickness of the rotor at four or more points around the circumference of the rotor. All measurements must be made at the same distance in from the edge of the rotor.

A rotor that varies by more than 0.10 mm (0.004 inch) can cause pedal pulsations and/or front end vibration during brake applications. A rotor that does not meet these specifications should be refinished to specifications or replaced.

During manufacturing, the brake rotor and the tolerances of the braking surface regarding flatness, thickness variation, and lateral runout are held very close. The maintenance of close tolerances on the shape of the braking surfaces is necessary to prevent brake roughness.

In addition to these tolerances, the surface finish must be held to a specified range. The control of the braking surface finish is necessary to avoid pulls and erratic performance and to extend lining life.

Light scoring of the rotor surfaces not exceeding 0.40 mm (0.016 inch) in depth, which may result from normal use, is not detrimental to brake operation.

Using a commercially available dial indicator, check lateral runout as follows:

Notice: Permissible lateral runout is a maximum 0.10 mm (0.004 inch). If lateral runout exceeds the specification, ensure that there is no dirt between the

rotor and the hub and that contact surfaces are smooth and free from burrs.

1. Position the transaxle in NEUTRAL.
2. Remove the rotor. Refer to „Rotor” in this section.
3. Fasten the brake rotor to the wheel hub with two wheel nuts. Refer to *Section 2E, Tires and Wheels.*
4. Fasten a dial indicator to the brake caliper.
5. Set the gauge probe tip to approximately 10mm (0.39inch) from the outer edge of the brake rotor, perpendicular to the disc and under slight preload.
6. Remove the dial indicator and the wheel nuts that connect the rotor to the hub.

Important: Since accurate control of the rotor tolerances is necessary for proper performance of the disc brakes, refinishing of the rotor should be done only with precision equipment.

7. Refinish the rotor, if required, with precision equipment. Discard the rotor if it fails to meet the above specifications after refinishing.
8. Install the rotor. Refer to „Rotor” in this section.

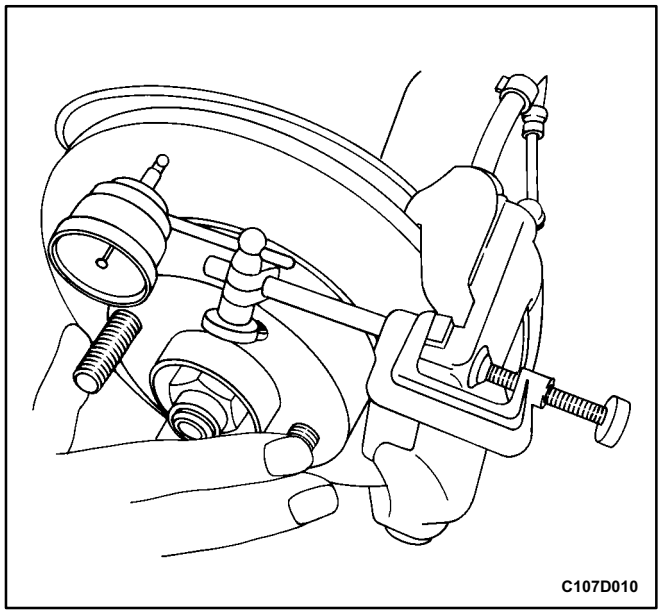

MAINTENANCE AND REPAIR

ON-VEHICLE SERVICE

SHOE AND LINING (BRAKE PADS)

Removal Procedure

1. Raise and suitably support the vehicle.
2. Remove the front wheels. Refer to *Section 2E, Tires and Wheels*.
3. Remove the lower bolt of the caliper assembly retaining frame.

Important: Caliper assembly removal is not necessary to service the brake pads.

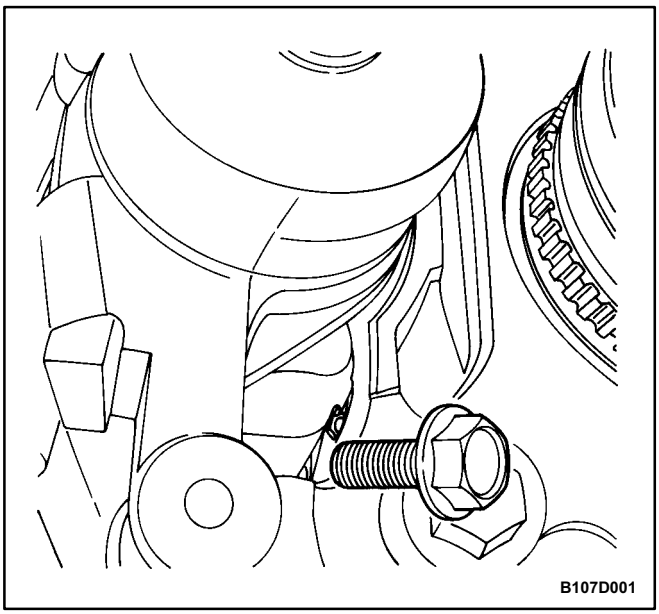

4. Pull the caliper piston housing up.

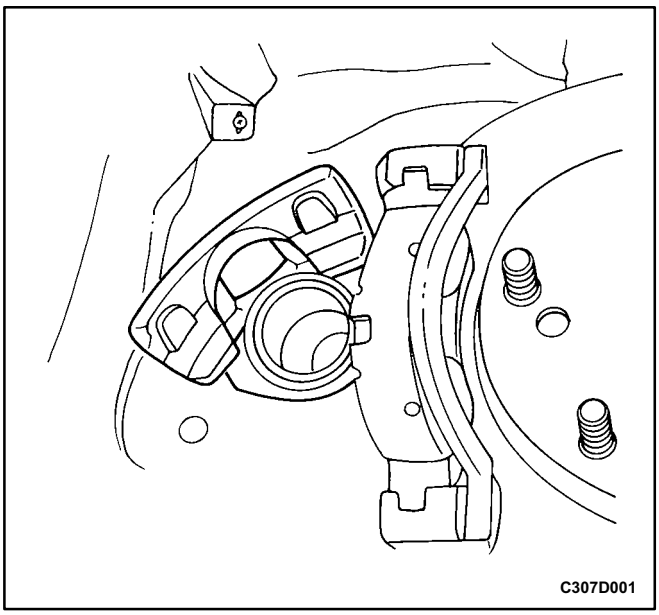

5. Remove the brake pads.

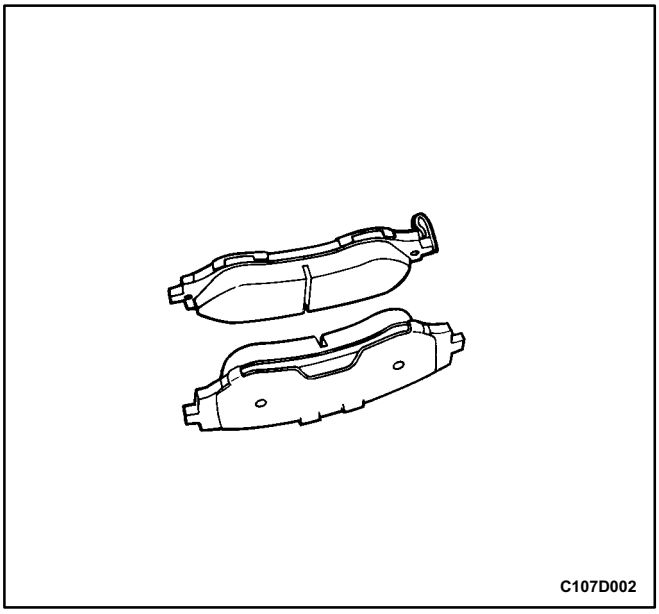

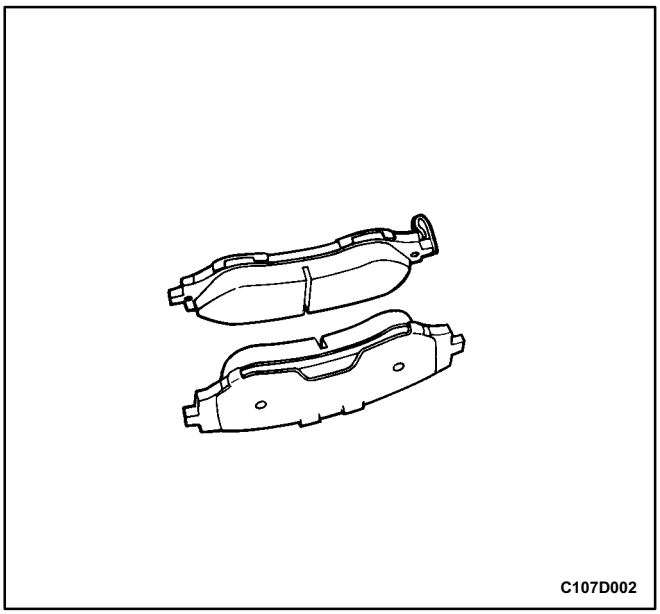

Installation Procedure

1. Measure the minimum brake pad thickness. Refer to „Lining Inspection” in this section.
2. Install the brake pads into the caliper.
3. Push the piston inward, if needed.

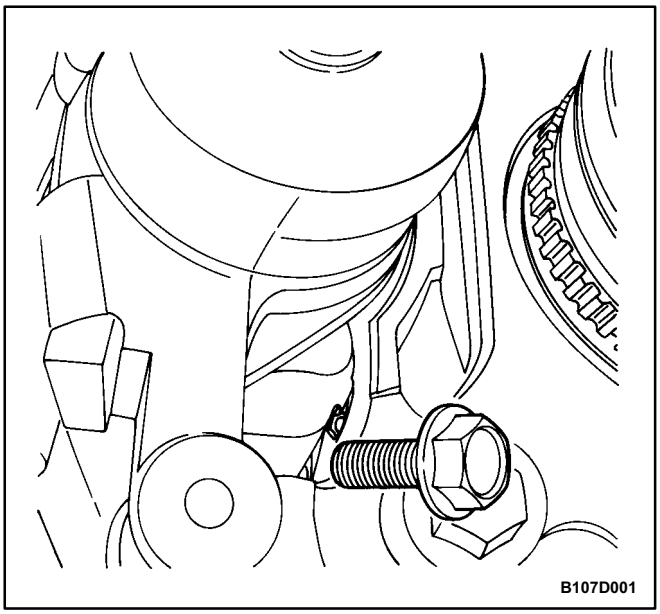

Notice: Take care not to damage the piston seal when the retaining frame is pulled down.

4. Pull down the caliper retaining frame and secure it with the lower bolt.

   ### Tighten

   Tighten the upper and lower retaining frame to caliper housing bolts to 27 N•m (19 lb•ft).
5. Install the front wheels. Refer to *Section 2E, Tires and Wheels*.
6. Lower the vehicle.

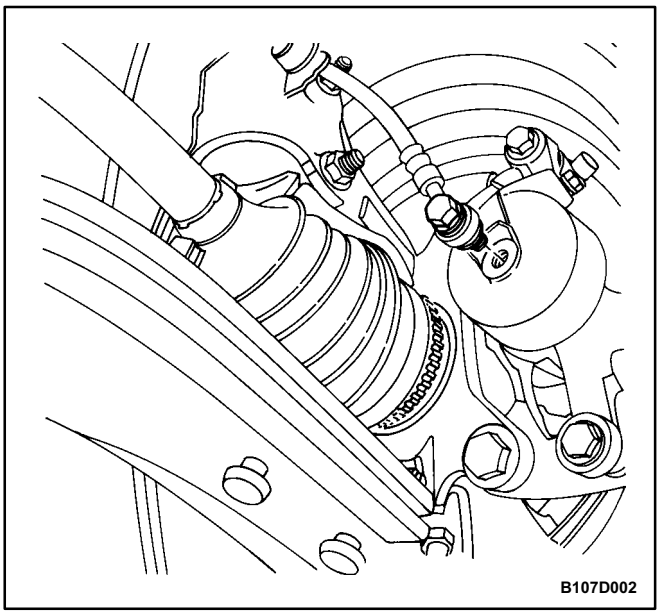

CALIPER ASSEMBLY

Removal Procedure

1. Raise and suitably support the vehicle.
2. Mark the position of the front wheels relative to the wheel hubs and remove the wheels. Refer to *Section 2E, Tires and Wheels*.
3. Remove the bolt and the washers attaching the brake hose to the caliper.

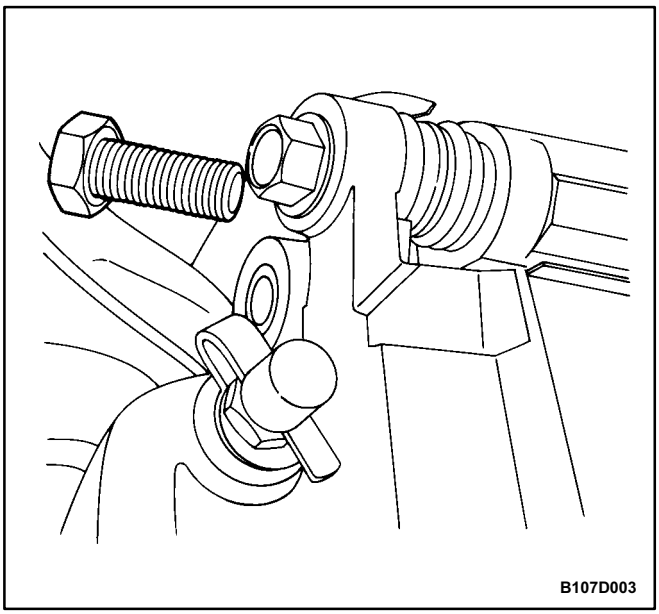

4. Disconnect the brake hose, and plug the openings in the caliper and the brake hose to prevent fluid loss and contamination.
5. Remove the caliper mounting bolts from the steering knuckle, and remove the caliper assembly.

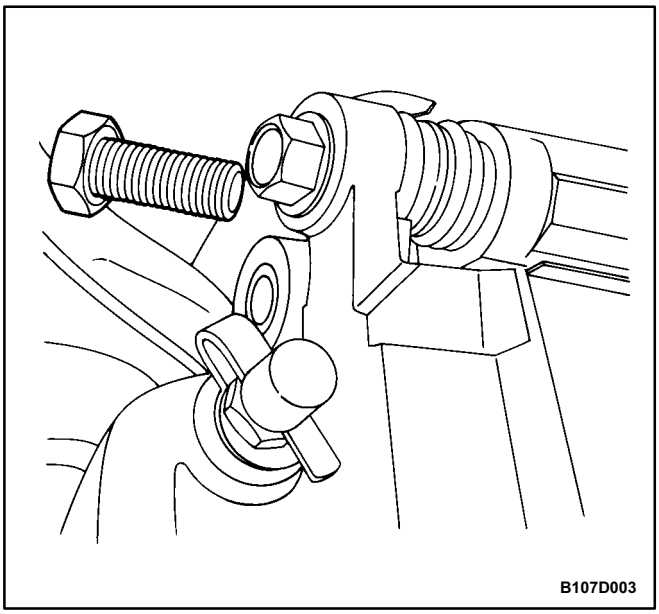

Installation Procedure

1. Install the caliper assembly with the mounting bolts.

Tighten

Tighten the caliper to steering knuckle mounting bolts to 95 N•m (70 lb•ft).

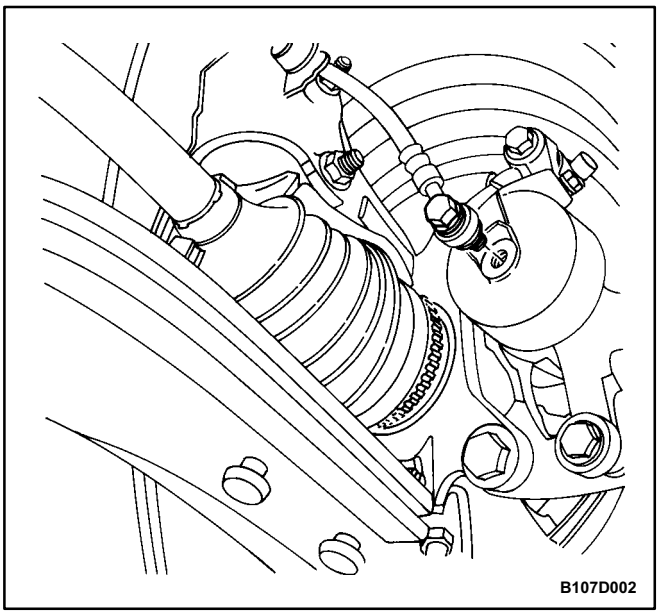

2. Connect the brake hose.

Tighten

Tighten the brake hose inlet fitting to caliper bolt and washers to 40 N•m (30 lb•ft).

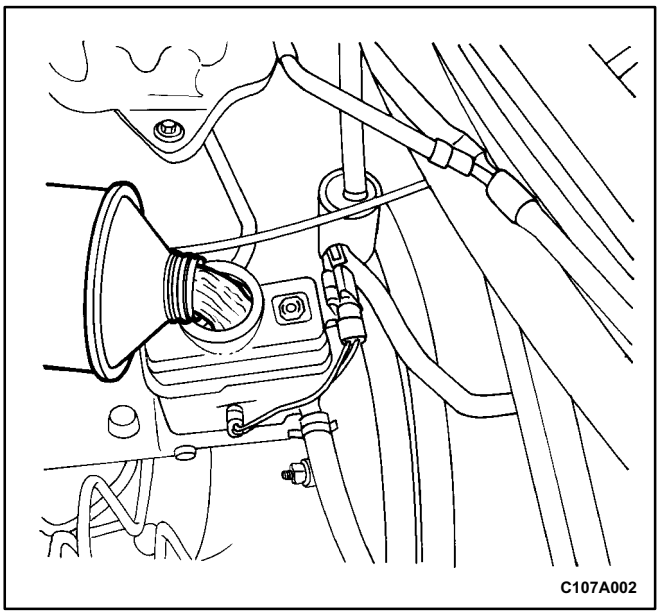

3. Install the front wheels. Refer to *Section 2E, Tires and Wheels*.
4. Lower the vehicle.
5. Fill the master cylinder to the proper level with clean brake fluid.
6. Bleed the caliper. Refer to *Section 4A, Hydraulic Brakes*.
7. Recheck the fluid level.

Notice: Do not move the vehicle until a firm pedal is obtained, or improper braking action will result.

8. Repeatedly press the brake pedal to bring the pads in contact with the rotor.

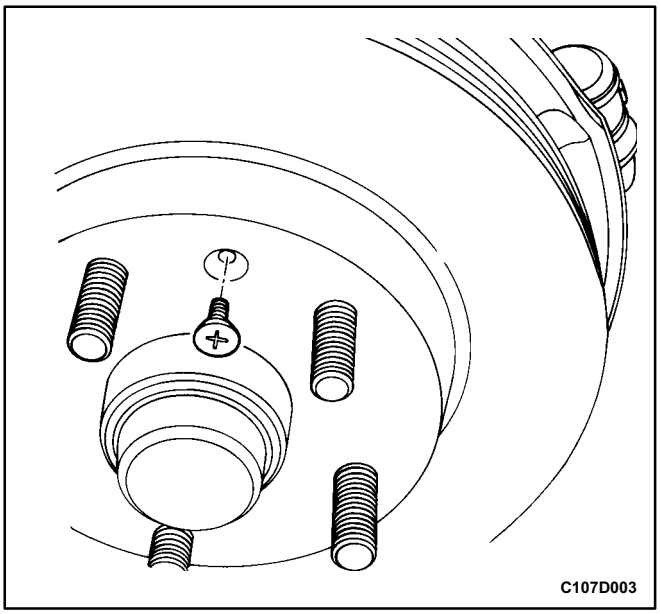

ROTOR

Removal Procedure

Notice: Do not hang the caliper assembly from the brake hose. Any resulting internal hose restriction will impede uniform braking action.

Important: To guarantee uniform braking on both sides, both rotors must have identical surfaces regarding smoothness and scoring depth. For this reason, always replace both rotors.

1. Remove the caliper assembly without disconnecting the brake hoses. Refer to „Caliper Assembly” in this section.
2. Remove the rotor to front wheel hub detent screws.
3. Pull off the rotor.

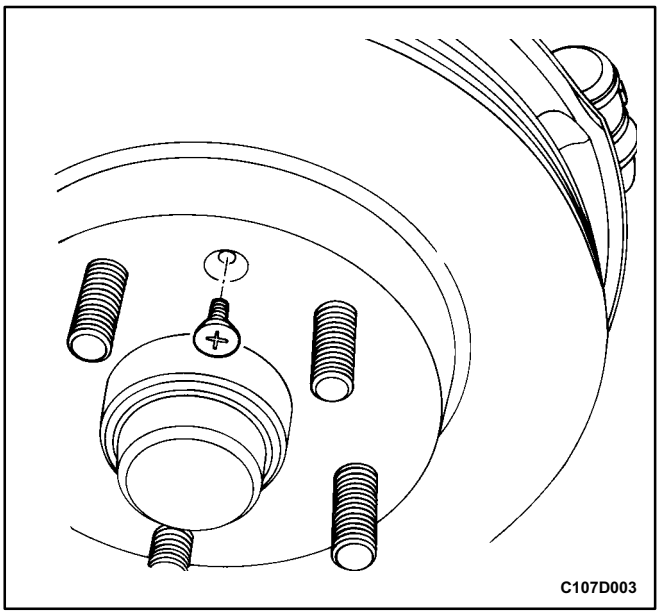

Installation Procedure

1. Inspect the rotor. Refer to „Rotor Inspection” in this section.
2. Install the rotor to the front wheel hub by tightening the detent screw.

   ### Tighten

   Tighten the rotor to front wheel hub detent screw to 4 N•m (35 lb•in).
3. Install the caliper assembly. Refer to „Caliper Assembly” in this section.

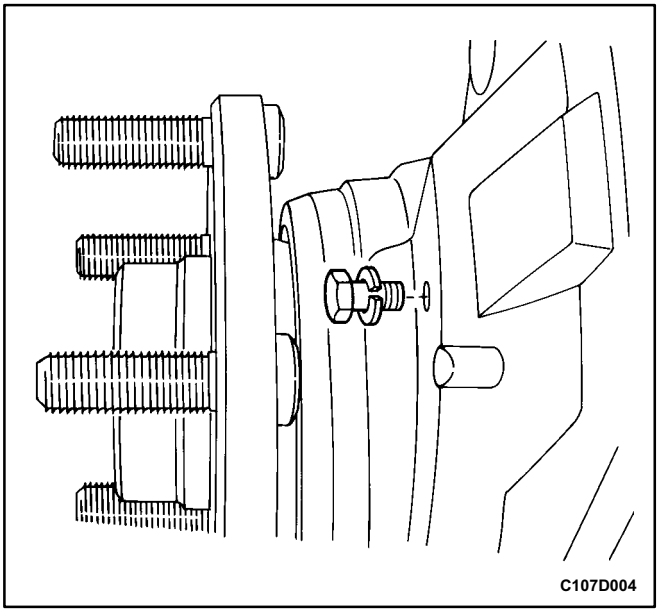

SPLASH SHIELD

Removal Procedure

1. Remove the rotor. Refer to „Rotor” in this section.
2. Remove the bolts and the lockwashers for the splash shield from the steering knuckle.
3. Remove the splash shield.

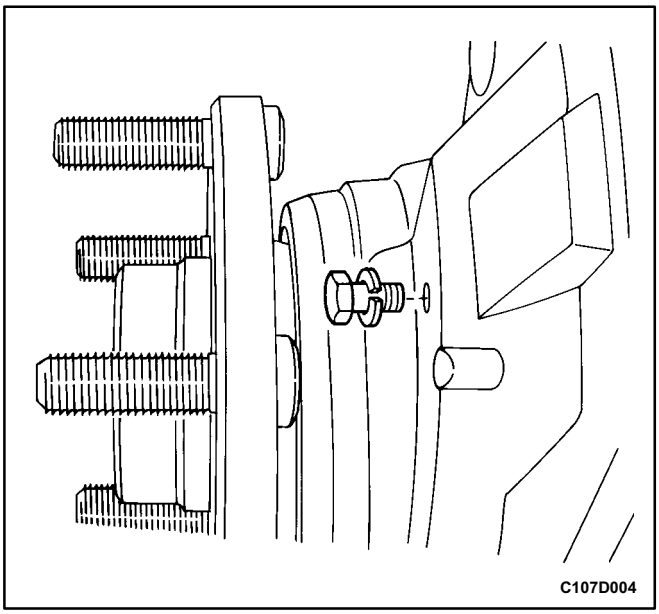

Installation Procedure

1. Install the splash shield.
2. Secure the splash shield to the steering knuckle with the bolts and the lockwashers.

   ### Tighten

   Tighten the splash shield to steering knuckle bolts to 25 N•m (18 lb•ft).
3. Install the rotor. Refer to „Rotor” in this section.

UNIT REPAIR

CALIPER OVERHAUL

Disassembly Procedure

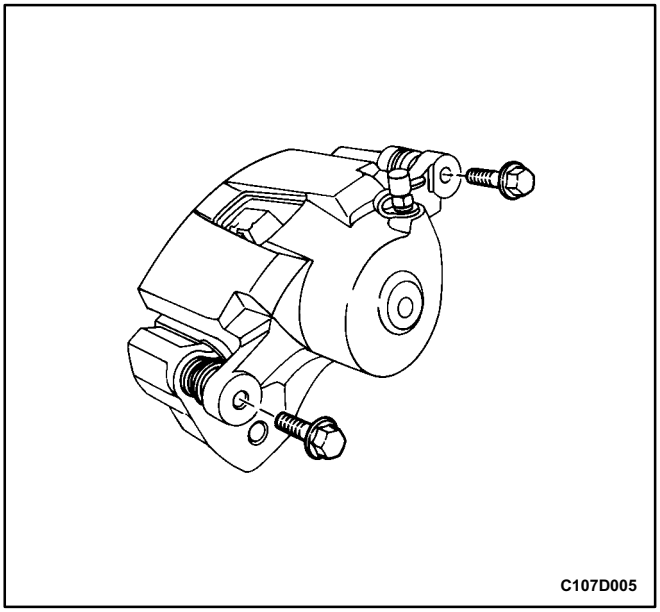

1. Remove the caliper assembly. Refer to „Caliper Assembly" in this section.
2. Remove the bolts connecting the caliper piston housing to the retaining frame.

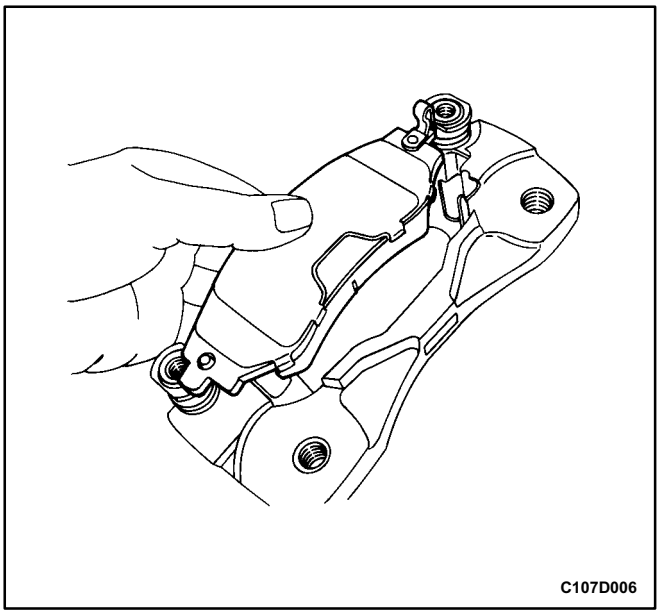

3. Remove the front pad brake set, including the pad springs, from the caliper. Refer to „Shoe and Lining (Brake Pads)" in this section.

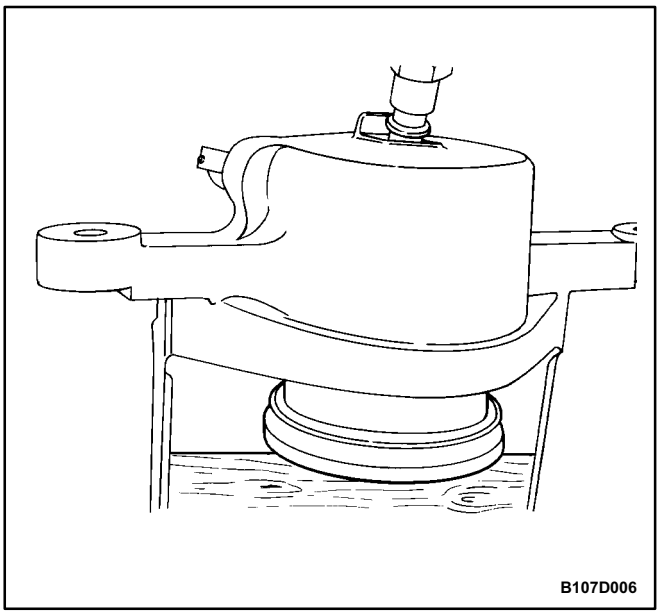

Caution: Do not place fingers in front of the piston in an attempt to catch or protect it when applying compressed air. This could result in serious injury.

Important: Insert a piece of hardwood into the caliper housing interior when removing the piston.

4. Using compressed air, blow out the piston from housing.
5. Remove the outer seal.
6. Remove the inner seal from the caliper piston bore.

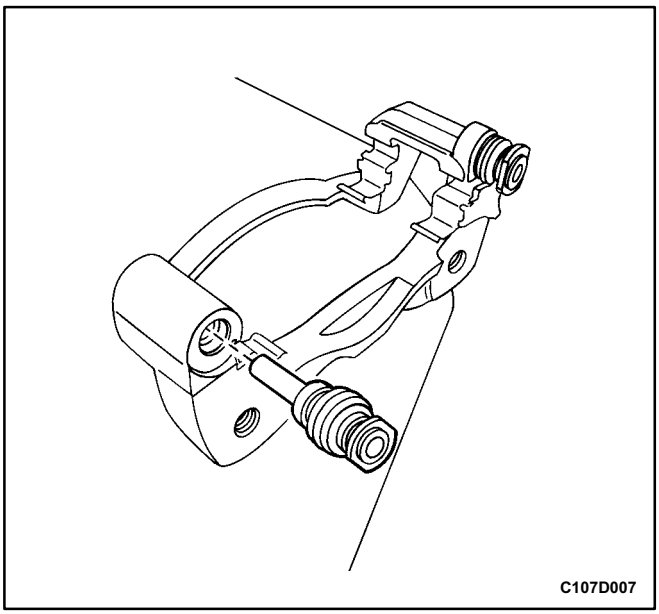

7. Remove the bleeder valve protector and the bleeder valve.
8. Pull out the pins and the rubber boots.

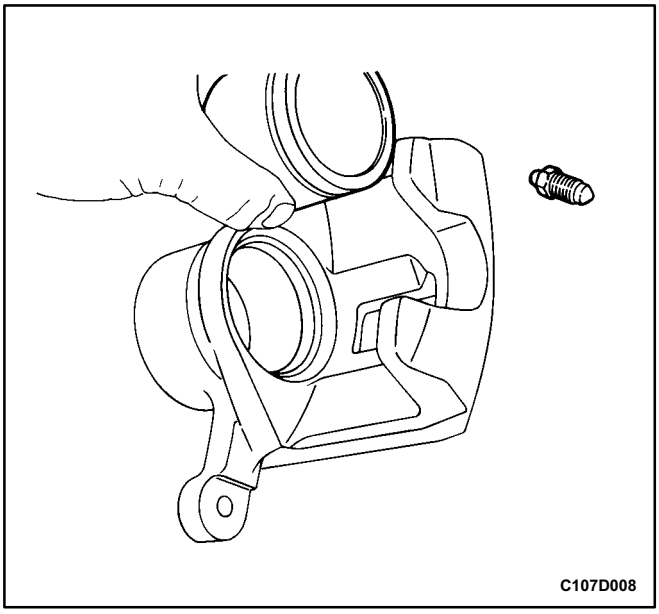

Assembly Procedure

1. Clean all the parts in denatured alcohol or brake fluid. Dry the parts with unlubricated compressed air and blow out all the passages in the housing and the bleeder valve.
2. Inspect the piston and the caliper for scoring, nicks, and corrosion. Replace the components if these elements are found.
3. Inspect the caliper bleeder valve.

Important: Do not remove material from the piston or the caliper bore.

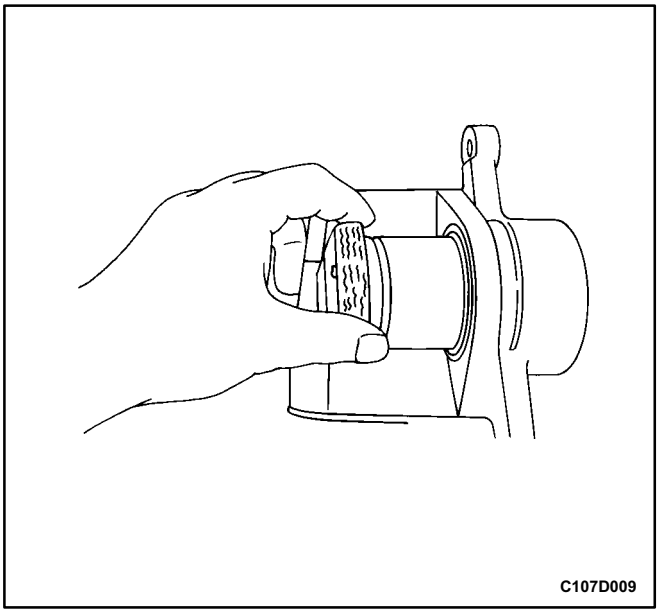

4. Lubricate a new piston inner seal.
5. Install the piston inner seal into the caliper housing groove. Make sure the seal is not twisted.
6. Install the outer piston dust seal in the groove.
7. Lubricate the piston with brake fluid.
8. Push the piston inward until it is properly seated.

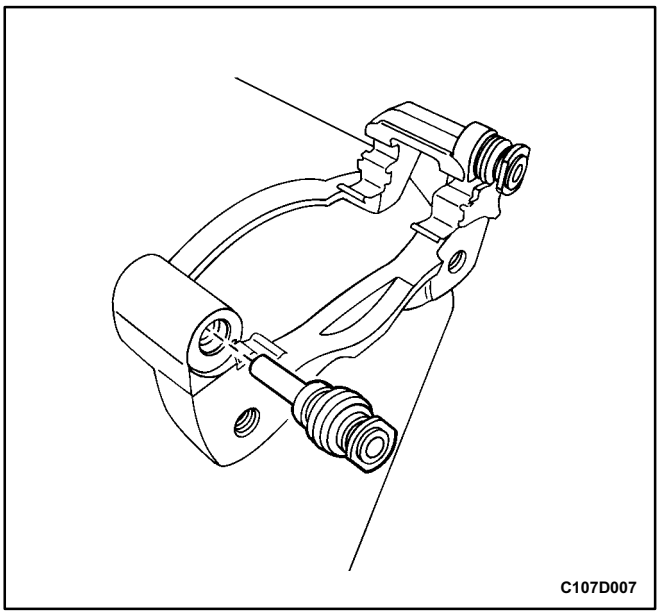

9. Coat the pins with rubber grease and install the boots.

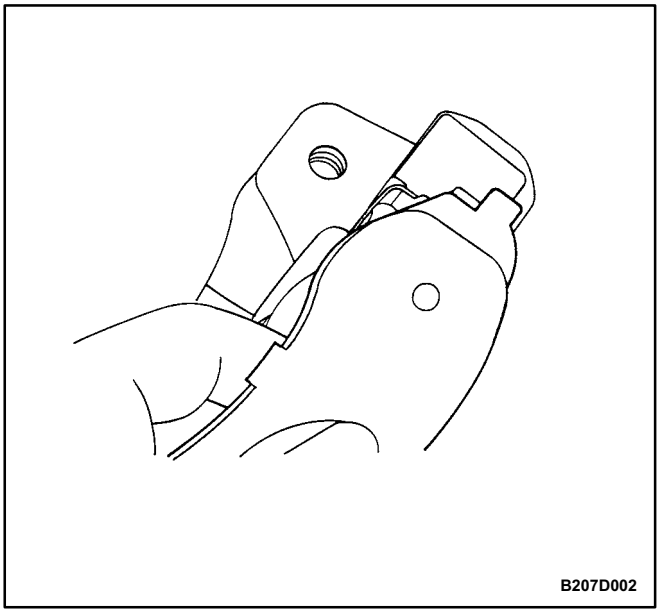

10. Install the caliper bleeder valve and the protector.

Tighten

Tighten the caliper bleeder valve to 6 N•m (53 lb•in).

11. Connect the brake pads and the pad springs.

Important: Make sure the pad springs are properly installed.

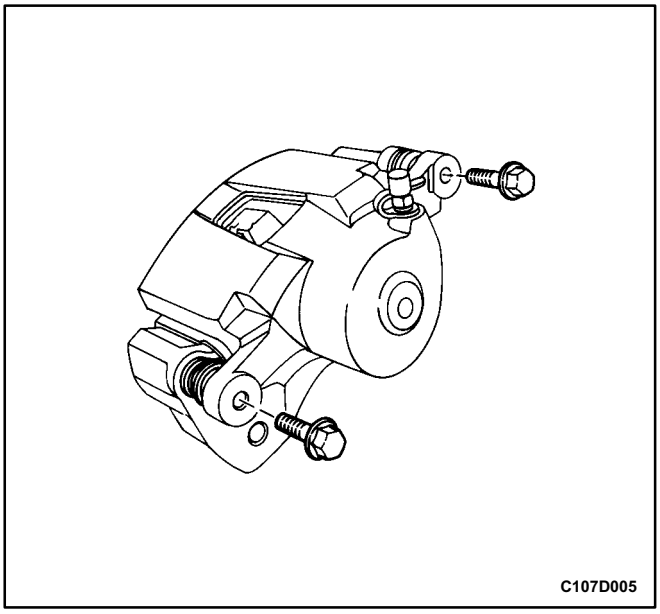

12. Connect the retaining frame to the caliper housing with the bolts.

Tighten

Tighten the retaining frame to caliper housing bolts to 27 N•m (19 lb•ft).

13. Install the caliper assembly. Refer to „Caliper Assembly” in this section.

GENERAL DESCRIPTION AND SYSTEM OPERATION

DISC BRAKE CALIPER ASSEMBLY

This caliper has a single bore and is mounted to the steering knuckle with two mounting bolts. Hydraulic pressure, created by applying the brake pedal, is converted by the caliper to a stopping force. This force acts equally against the piston and the bottom of the caliper bore to move the piston outward and to slide the caliper inward, resulting in a clamping action on the rotor. This clamping action forces the linings against the rotor, creating friction to stop the vehicle.

Important:

- Replace all components included in the repair kits used to service this caliper.
- Lubricate the rubber parts with clean brake fluid to ease assembly.
- Do not use lubricated shop air on brake parts, as damage to the rubber components may result.
- If any hydraulic component is removed or disconnected, it may be necessary to bleed all or part of the brake system.
- Replace the pads in axle sets only.
- The torque values specified are for dry, unlubricated fasteners.
- Perform the service operations on a clean bench, free from all mineral oil materials.

SECTION 4E

REAR DISC BRAKES

TABLE OF CONTENTS

Specifications **4E-1**
Fastener Tightening Specifications 4E-1
Diagnosis **4E-1**
Lining Inspection 4E-1
Rotor Inspection 4E-1
Maintenance and Repair **4E-3**
On-Vehicle Service 4E-3
Shoe and Lining (Brake Pads) 4E-3
Caliper Assembly 4E-4
Rotor 4E-6
Splash Shield/Backplate and Parking Brake Lever 4E-7
Unit Repair 4E-14
Caliper Overhaul 4E-14
General Description and System Operation **4E-19**
Disc Brake Caliper Assembly 4E-19

SPECIFICATIONS

FASTENER TIGHTENING SPECIFICATIONS

Application	N•m	Lb•Ft	Lb•In
Brake Hose Inlet Fitting to Caliper Bolt	32	24	-
Caliper Bleeder Valve	6	-	53
Caliper to Steering Knuckle Mounting Bolts	65	48	-
Caliper Guide Pin Bolts	31	23	-
Parking Brake Shoe Hold Down Spring Assembly Screw	4	-	35
Rotor to Rear Wheel Hub Detent Screw	4	-	35
Splash Shield/Backplate toSteering Knuckle Bolts	65	48	-
Wheel Hub Assembly to Spindle Shaft Caulking Nut	285	210	-

DIAGNOSIS

LINING INSPECTION

1. Raise and suitably support the vehicle.
2. Remove the rear wheels. Refer to *Section 2E, Tires and Wheels*.
3. Visually check the linings for minimum thickness and wear.
4. Measure the thickness.

Important: The minimum discard thickness of the lining is 2 mm (0.08 inch).

5. Install the pads in axle sets only.
6. Install the rear wheels. Refer to *Section 2E, Tires and Wheels*.
7. Lower the vehicle.

ROTOR INSPECTION

Thickness variation can be checked by measuring the thickness of the rotor at four or more points around the circumference of the rotor. All measurements must be made at the same distance in from the edge of the rotor.

A rotor that varies by more than 0.10 mm (0.004 inch) can cause pedal pulsations and/or front end vibration during brake applications. A rotor that does not meet these specifications should be refinished to specifications or replaced.

During manufacturing, the brake rotor and the tolerances of the braking surface regarding flatness, thickness variation, and lateral runout are held very close. The maintenance of close tolerances on the

shape of the braking surfaces is necessary to prevent brake roughness.

In addition to these tolerances, the surface finish must be held to a specified range. The control of the braking surface finish is necessary to avoid pulls and erratic performance and to extend lining life.

Notice: Permissible lateral runout is a maximum 0.10 mm (0.004 inch). If lateral runout exceeds the specification, make sure there is no dirt between the rotor and the hub and that contact surfaces are smooth and free from burrs in order to avoid premature wear.

Using a commercially available dial indicator, check the lateral runout as follows:

1. Position the transaxle in neutral.
2. Remove the rotor. Refer to „Rotor” in this section.
3. Fasten the brake rotor to the wheel hub with two wheel bolts.
4. Fasten a dial indicator to the brake caliper.
5. The dial indicator probe tip should measure 234 mm (9.2inches) from the center of the disc hole.
6. Remove the dial indicator and the wheel bolts.

Important: Since accurate control of the rotor tolerances is necessary for proper performance of the disc brakes, refinishing of the rotor should be done only with precision equipment.

7. Refinish the rotor, if required, with precision equipment. Discard the rotor if it fails to meet the above specifications after refinishing.
8. Install the rotor. Refer to „Rotor” in this section.

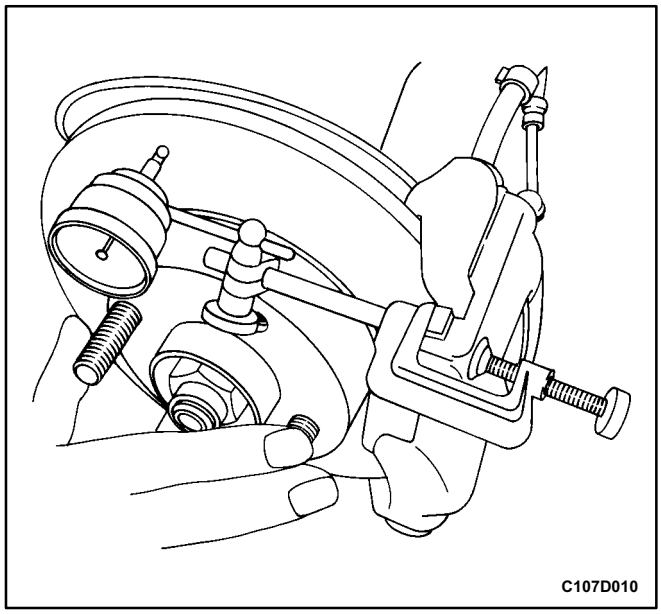

MAINTENANCE AND REPAIR

ON-VEHICLE SERVICE

SHOE AND LINING (BRAKE PADS)

Removal Procedure

1. Raise and suitably support the vehicle.
2. Remove the rear wheels. Refer to *Section 2E, Tires and Wheels*.
3. Remove the lower guide pin bolt of the caliper assembly, and loosen the upper guide pin bolt.

Important: Caliper assembly removal is not necessary to service the brake pads.

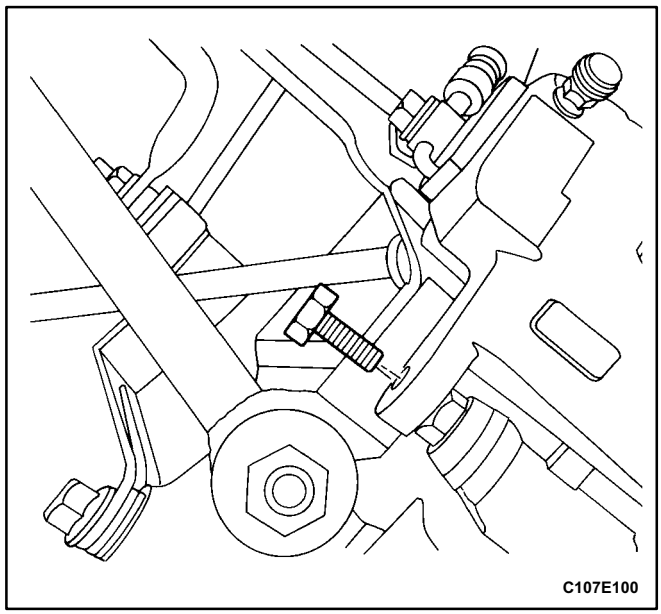

4. Pull the caliper piston housing up.

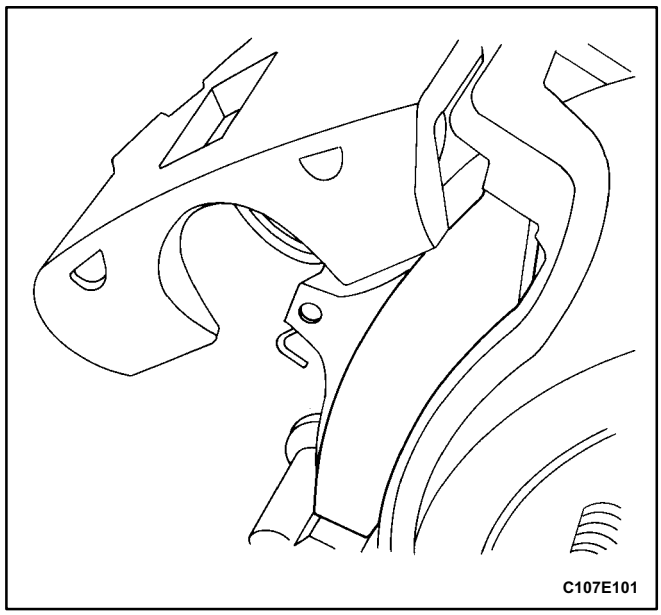

5. Remove the brake pads.

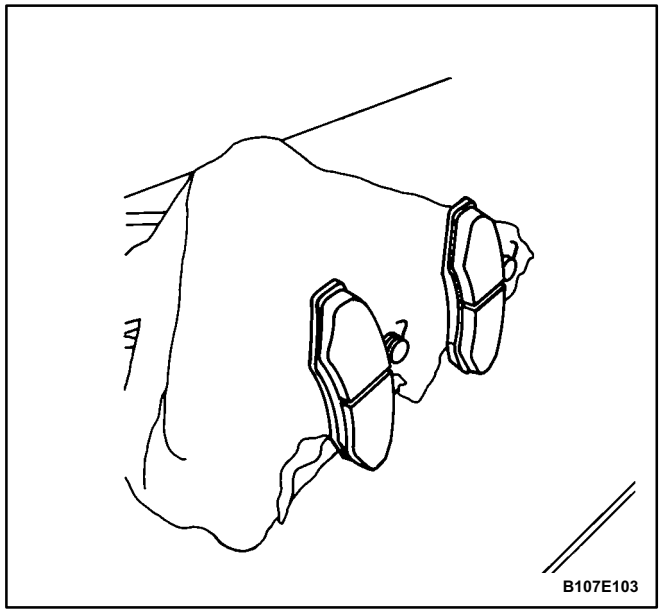

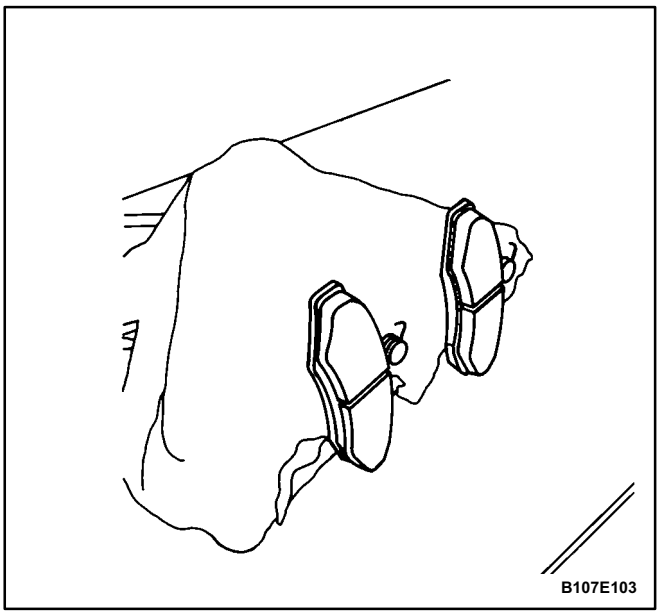

Installation Procedure

1. Measure the minimum brake pad thickness. Refer to „Lining Inspection" in this section.
2. Install the brake pads into the caliper.
3. Push the piston inward, if needed.

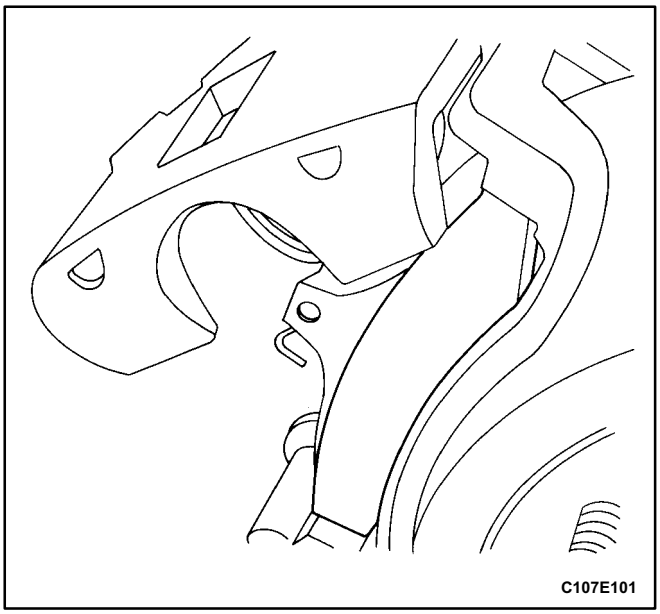

Notice: Take care not to damage the piston seal when the piston housing is pulled down.

4. Pull down the caliper piston housing and secure it with the bolts.

   Tighten

   Tighten the upper and the lower caliper guide pin bolts to 31 N•m (23 lb•ft).
5. Install the rear wheels. Refer to *Section 2E, Tires and Wheels*.
6. Lower the vehicle.

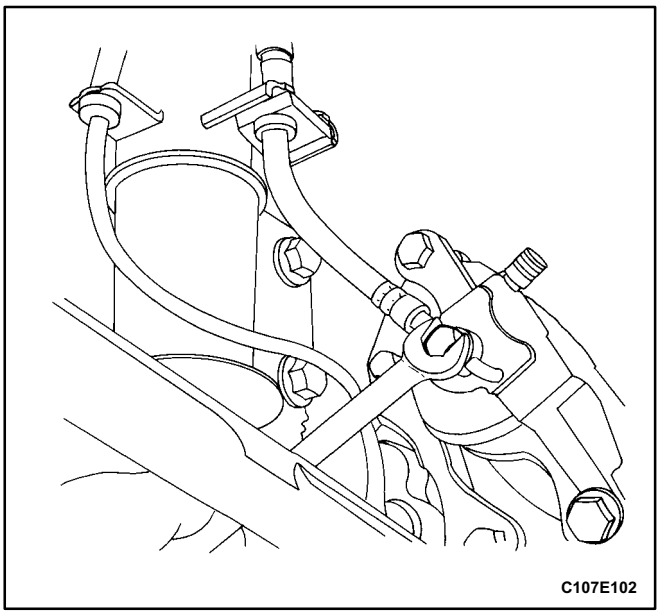

CALIPER ASSEMBLY

Removal Procedure

1. Raise and suitably support the vehicle.
2. Mark the position of the rear wheels relative to the wheel hubs and remove the wheels. Refer to *Section 2E, Tires and Wheels*.
3. Remove the bolt and the washers that attach the brake hose inlet fitting to the caliper.

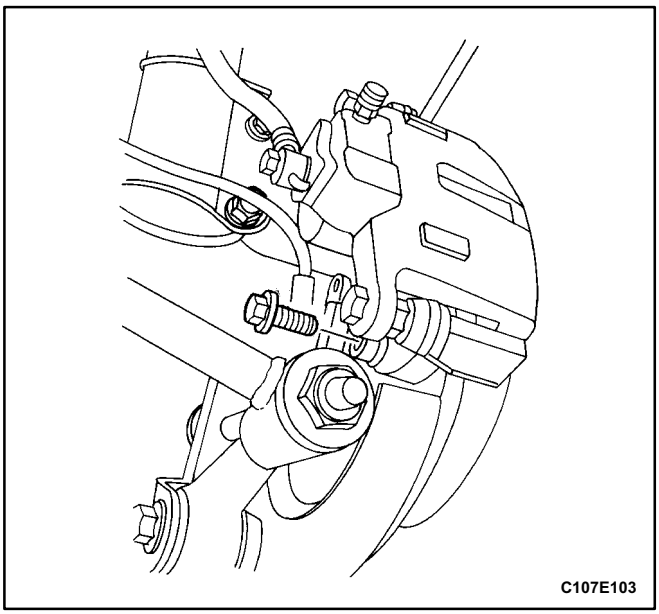

4. Disconnect the brake hose. Plug the openings in the caliper and the brake hose to prevent fluid loss and contamination.
5. Remove the caliper mounting bolts from the steering knuckle.
6. Remove the caliper assembly.

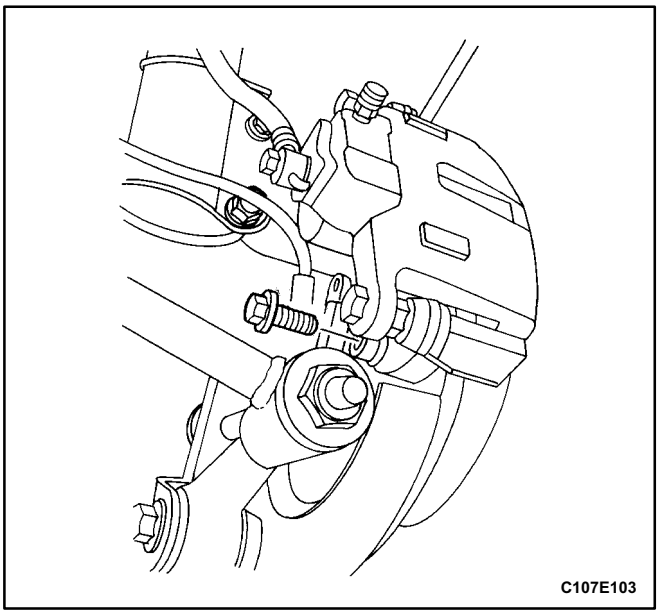

Installation Procedure

1. Install the caliper assembly with the mounting bolts.

Tighten

Tighten the caliper to steering knuckle mounting bolts to 65 N•m (48 lb•ft).

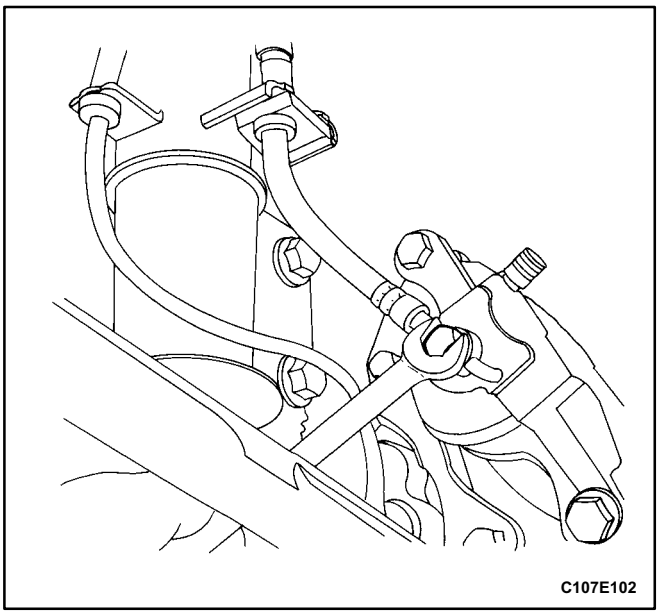

2. Connect the brake hose with the bolt and washers.

Tighten

Tighten the brake hose inlet fitting to caliper bolt and washers to 32 N•m (24 lb•ft).

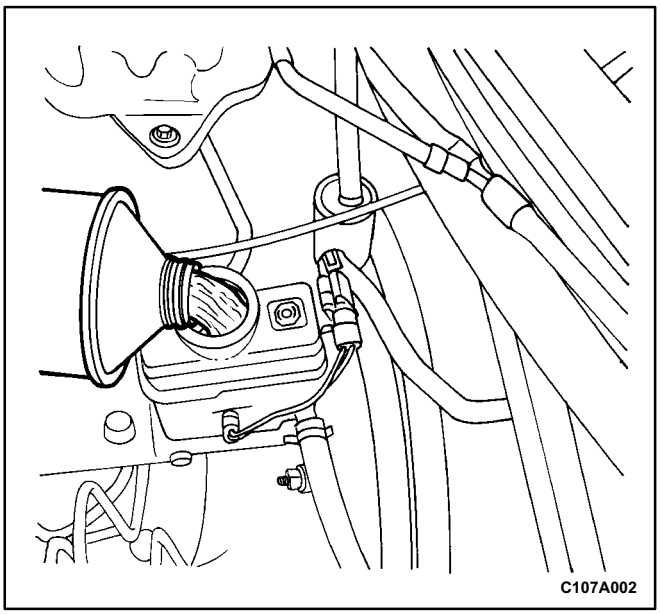

3. Install the rear wheels. Refer to *Section 2E, Tires and Wheels*.
4. Lower the vehicle.
5. Fill the master cylinder to the proper level with clean brake fluid.
6. Bleed the caliper. Refer to *Section 4A, Hydraulic Brakes*.
7. Recheck the fluid level.

Notice: Do not move the vehicle until a firm pedal is obtained, or improper braking action will result.

8. Repeatedly press the brake pedal to bring the pads in contact with the rotor.

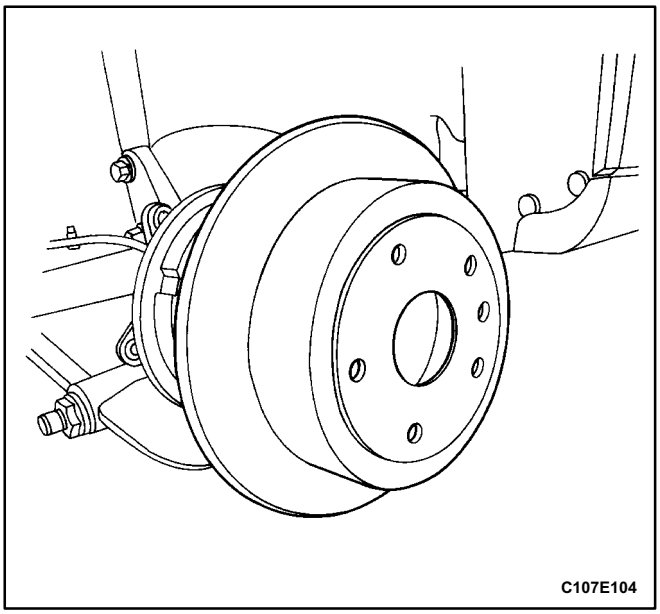

ROTOR

Removal Procedure

Notice: In order to avoid damage to the components, do not hang the caliper assembly from the brake hose.

Important: To guarantee uniform braking on both sides, both rotors must have identical surfaces regarding smoothness and scoring depth. For this reason, always replace both rotors.

1. Remove the caliper assembly without disconnecting the brake hoses. Refer to „Caliper Assembly” in this section.
2. Remove detent screw from the rotor to rear wheel hub.
3. Pull off the rotor.

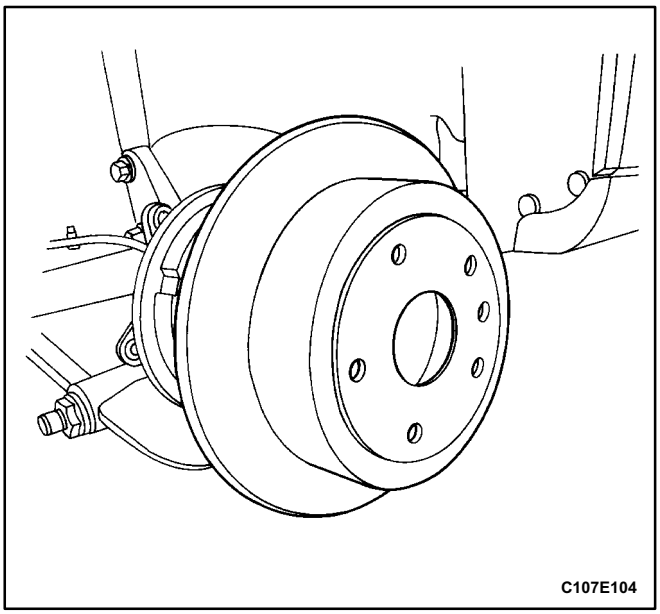

Installation Procedure

1. Inspect the rotor. Refer to „Rotor Inspection” in this section.
2. Install the rotor to rear wheel hub with the detent screw.

   ### Tighten

   Tighten the rotor to rear wheel hub detent screw to 4 N•m (35 lb•in).

3. Install the caliper assembly. Refer to „Caliper Assembly” in this section.

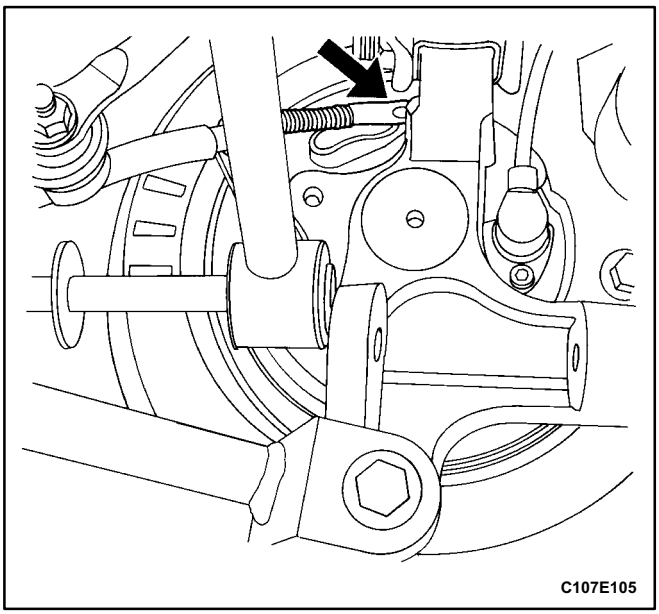

SPLASH SHIELD/BACKPLATE AND PARKING BRAKE LEVER

Removal Procedure

1. Remove the rotor. Refer to „Rotor” in this section.
2. Disconnect the parking brake cable from the brake backplate operating lever.

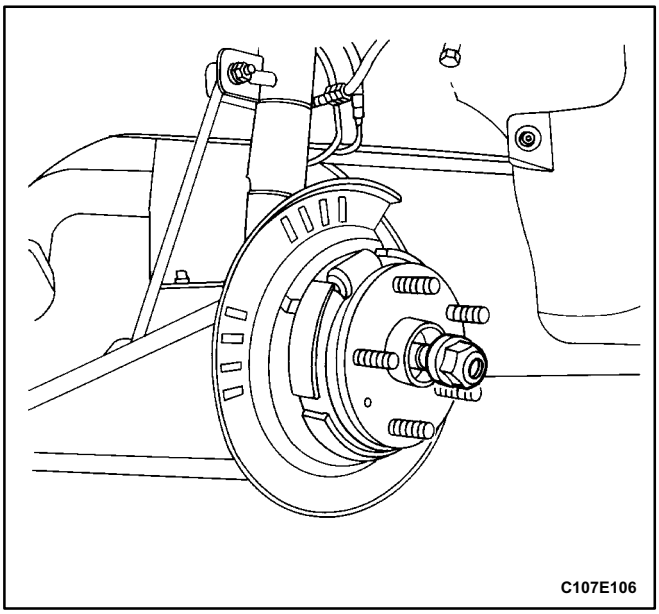

3. Pry off the shaft dust cover.
4. Remove the spindle shaft caulking nut.

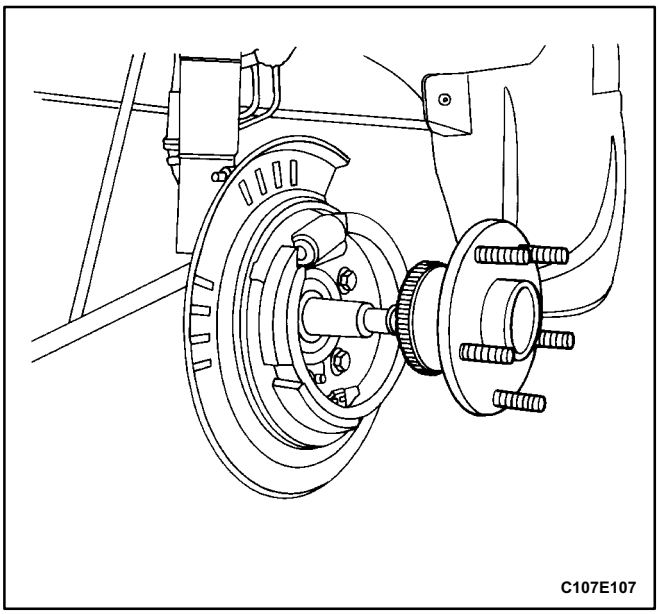

5. Remove the wheel hub assembly from the spindle shaft.

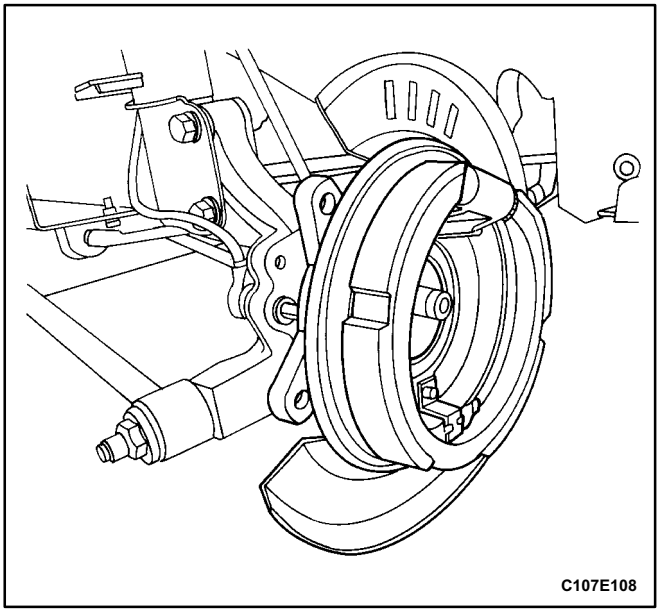

6. Remove the bolts that secure the splash shield/backplate/parking brake shoe assembly to the steering knuckle.
7. Remove the splash shield/backplate/shoe assembly from the steering knuckle.

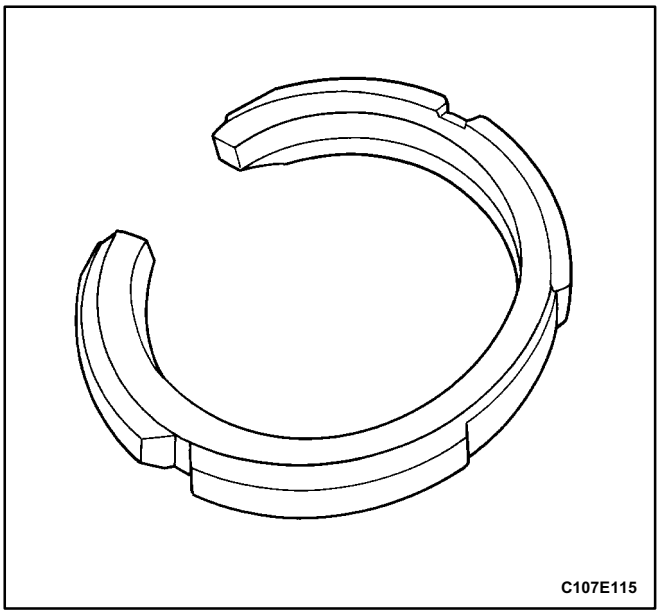

8. Remove the screw that secures the parking brake shoe hold down spring assembly to the backplate.
9. Remove the parking brake shoe, sliding it away from the actuation mechanism.

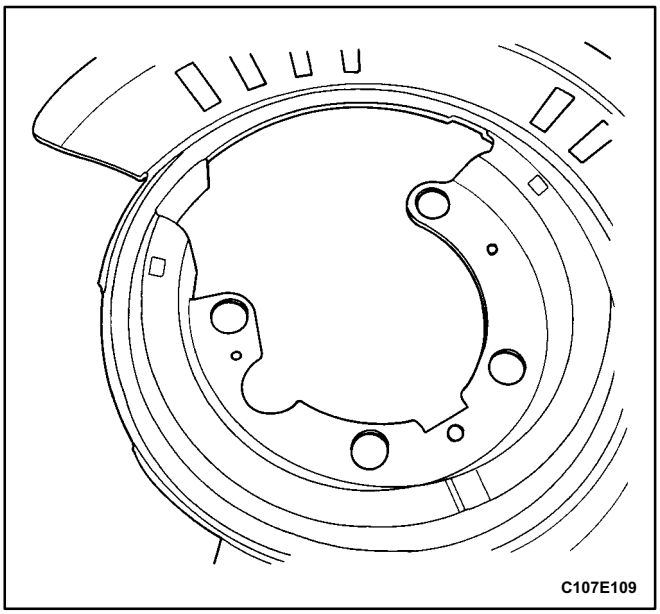

10. Measure the shoe assembly diameter. Refer to *Section 4G, Parking Brake.*
11. Remove the splash shield.

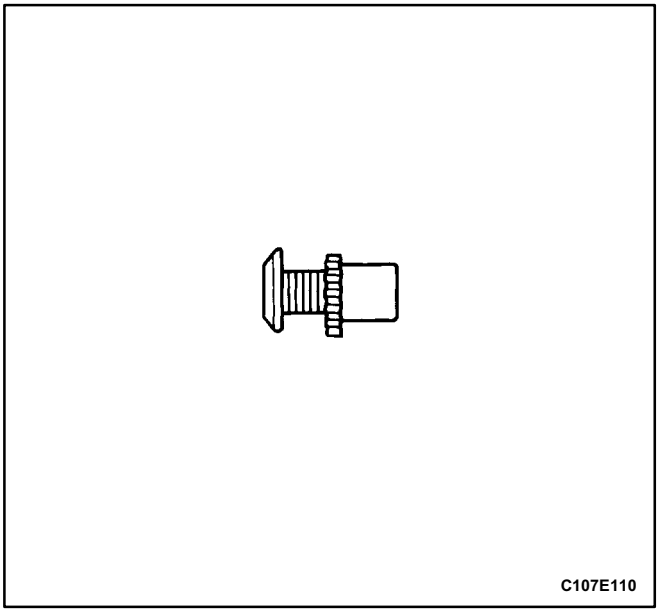

12. Remove and discard the adjuster screw and the nut.

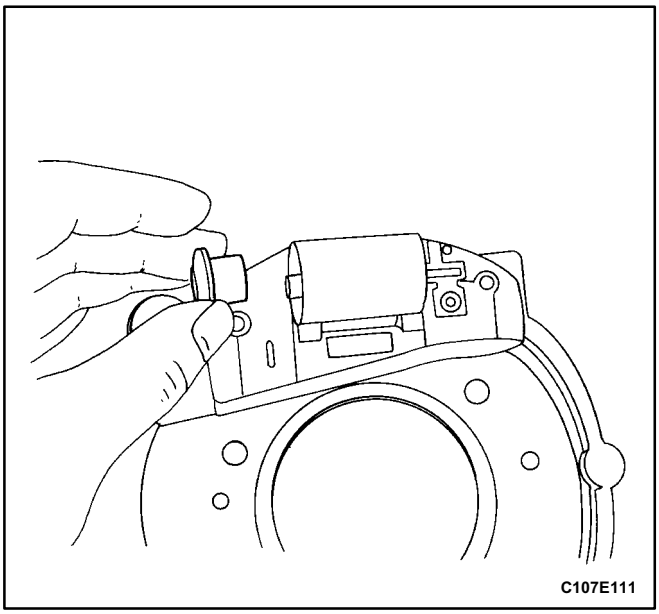

13. Remove and discard the tappet and the pushrod.

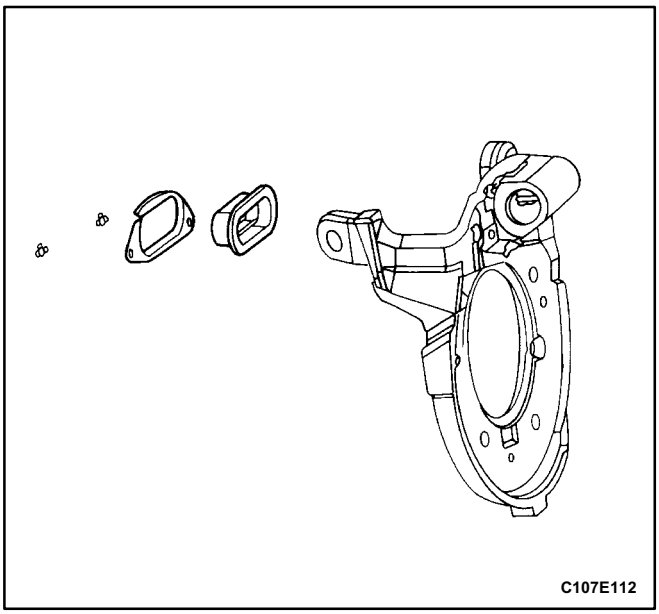

14. Use a 3.5 mm (0.14 inch) drill to remove the pop rivets that hold the dust cover assembly and the adjuster pawl to the backplate.
15. Remove and discard the dust cover and the dust cover retainer from the backplate.

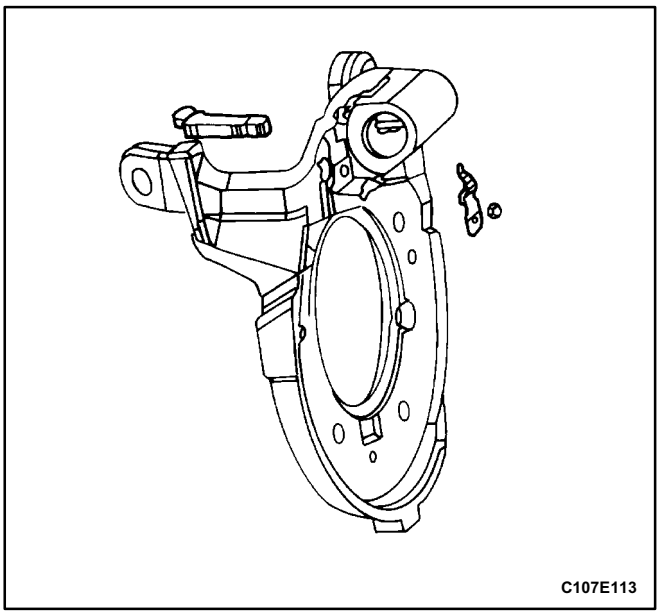

16. Remove and discard the lever and the adjuster pawl.

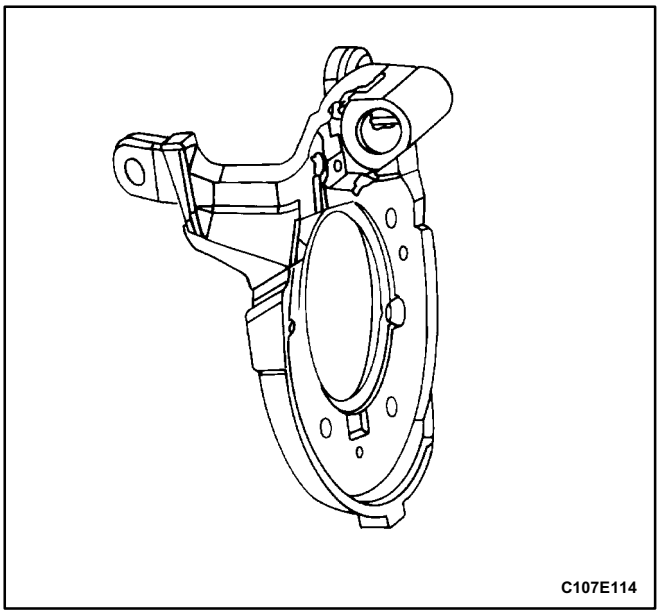

Installation Procedure

Caution: A high flash point oil free solvent, such as tricloroethylene or acetone, used in cleaning brake components, such as backplates, is usually highly flammable and unhealthy if inhaled for prolonged periods.

1. Clean the backplate to make sure the actuation cavity is free from grease and any other contamination.
2. Inspect the shoe assembly position. The shoe should fit centered on the splash shield with the shoe tips located correctly in the slots.

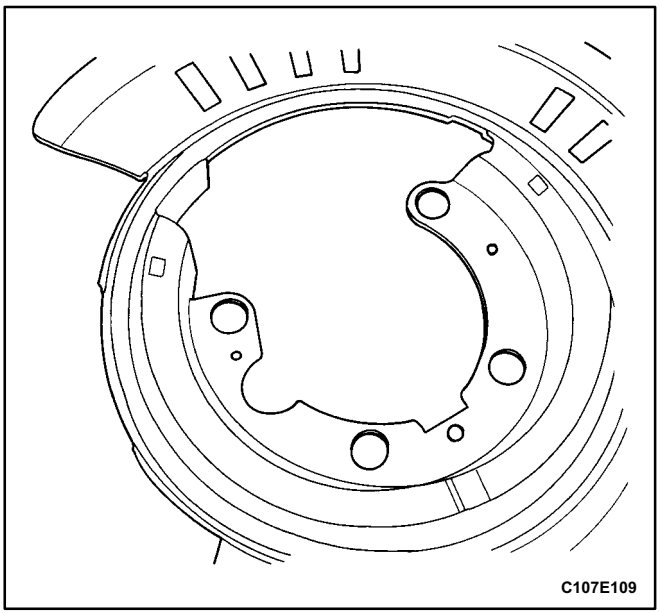

3. Inspect the splash shield for rust or any other damage. Replace the splash shield if necessary.

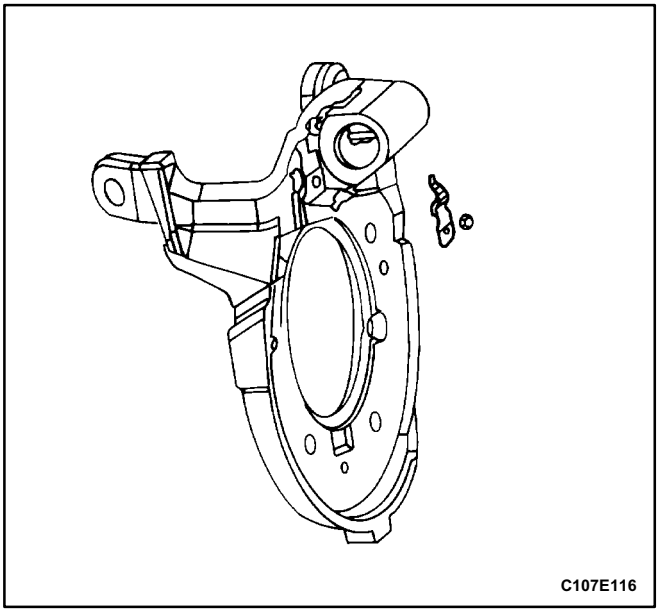

4. Install the new adjuster pawl to the backplate and secure it with a pop rivet.

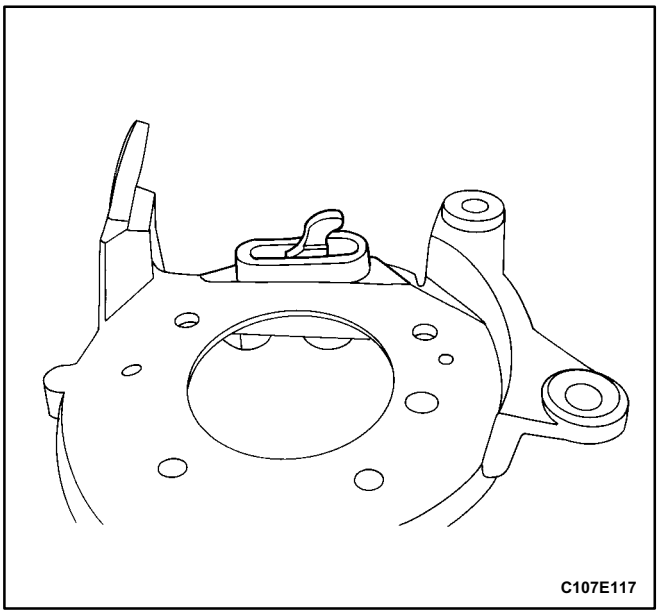

5. Slide the new dust cover onto the dust cover notches.
6. Insert the new lever and the dust cover assembly into the backplate.
7. Secure the new dust cover retainer with pop rivets.

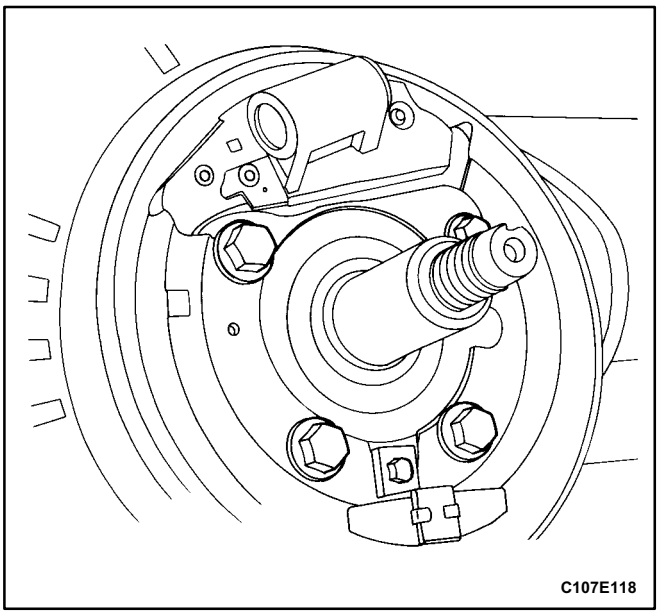

8. Lubricate the actuation cavity and the tappet with the grease. Make sure that the internal bore of the cavity is covered with the grease.
9. Secure the splash shield and the backplate to the steering knuckle with the bolts.

Tighten

Tighten the splash shield/backplate to steering knuckle bolts to 65 N•m (48 lb•ft).

10. Secure the parking brake shoe hold down spring assembly with the screw.

Tighten

Tighten the parking brake shoe hold down spring assembly screw to 4 N•m (35 lb•in).

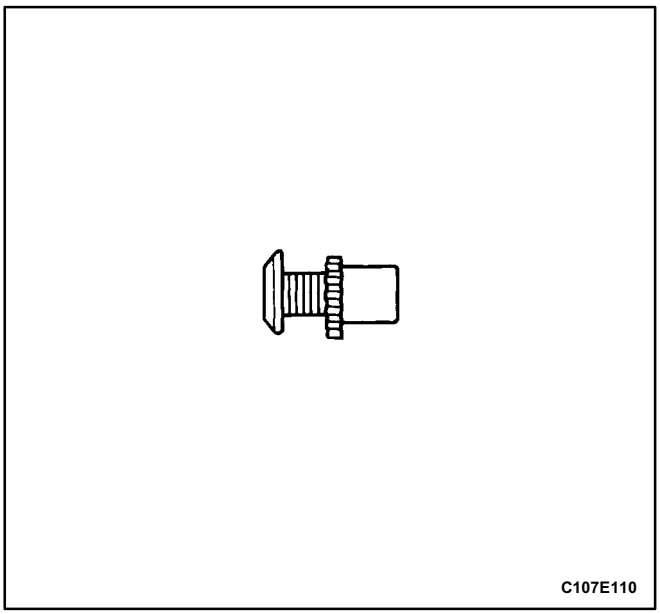

11. Connect the new parking brake adjustment screw to the new adjustment nut.
12. Tighten the adjustment nut to the point at which it meets the screw, and then back off one quarter turn.

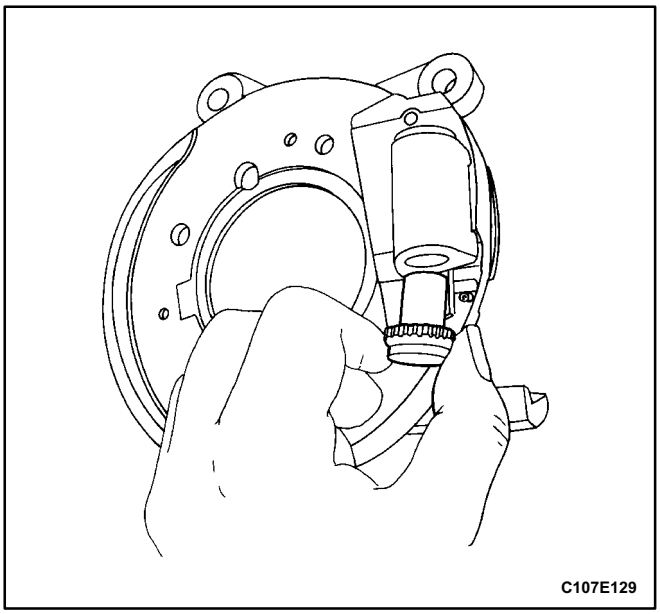

13. Install the adjustment screw and the adjustment nut into the backplate actuation mechanism on the adjustment pawl side. Keep the shoe slot parallel with the backplate face.

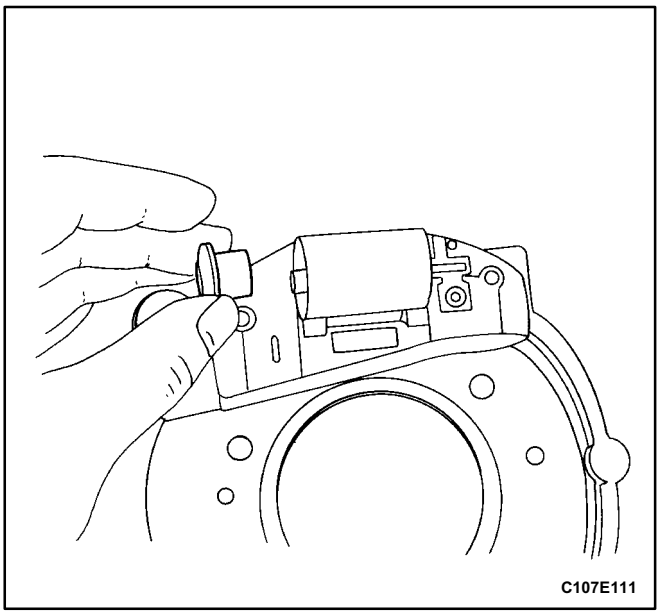

14. Install the new pushrod into the tappet. Make sure the pushrod is set correctly into the lever socket by holding the lever into the backplate while inserting the pushrod and the tappet.

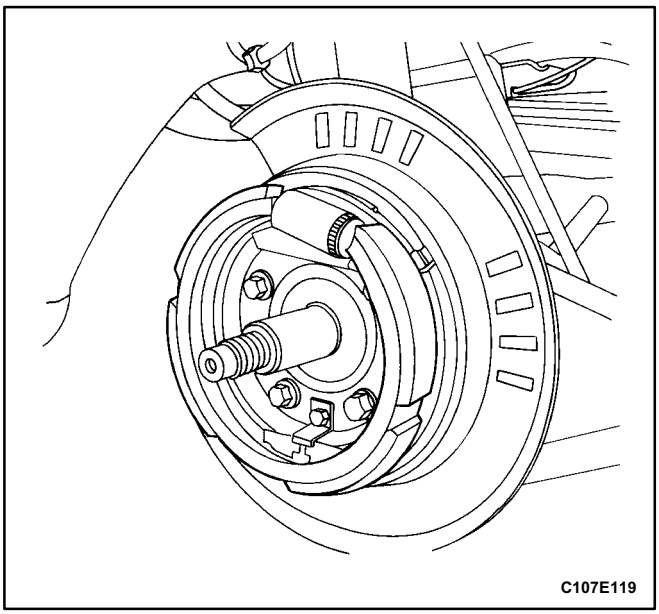

15. Clean the excess grease away using a clean rag.

Important: The shoe assembly must be resting on the shield with the brand side up.

Important: Clean hands are required when handling the parking brake shoe.

16. Install the parking brake shoe, engaging the shoe tips in both the adjusting screw and the tappet slots.

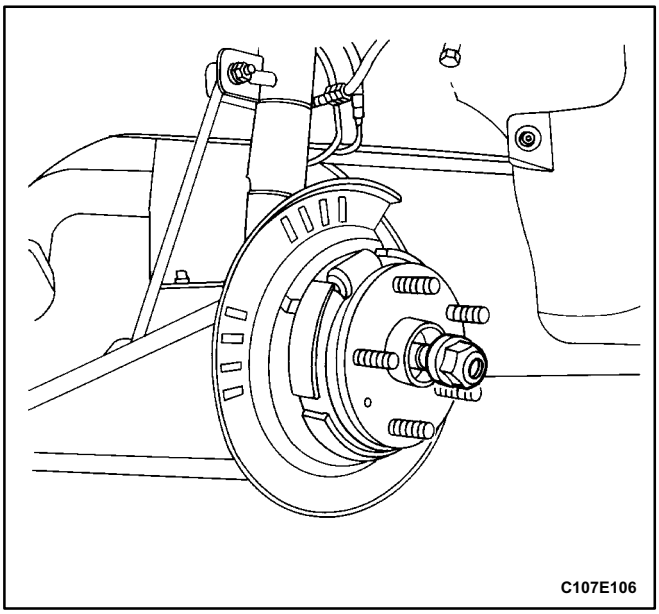

17. Install the wheel hub assembly.
18. Secure the wheel hub assembly with the wheel hub assembly to spindle shaft caulking nut.

Tighten

Tighten the wheel hub assembly to spindle shaft caulking nut to 285 N•m (210 lb•ft).

19. Install the shaft dust cover.

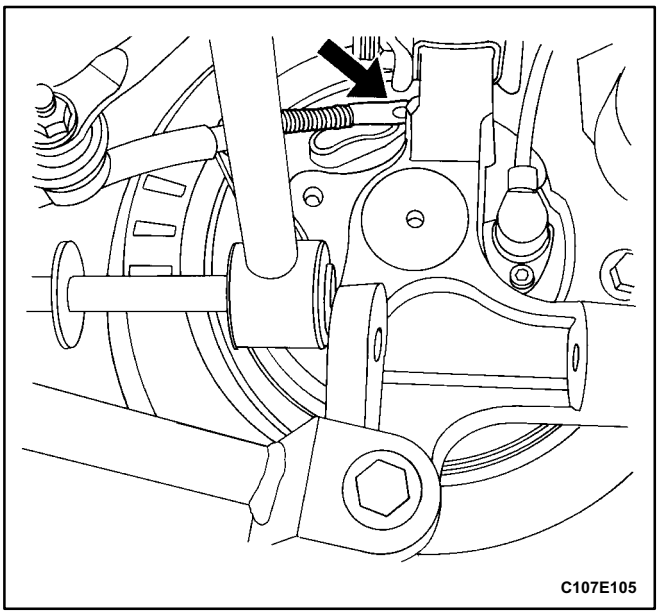

20. Install the parking brake cable to the parking brake lever on each side of the vehicle.
21. Adjust the parking brake. Refer to *Section 4G, Parking Brake.*
22. Install the rotor. Refer to „Rotor” in this section.

UNIT REPAIR

CALIPER OVERHAUL

Disassembly Procedure

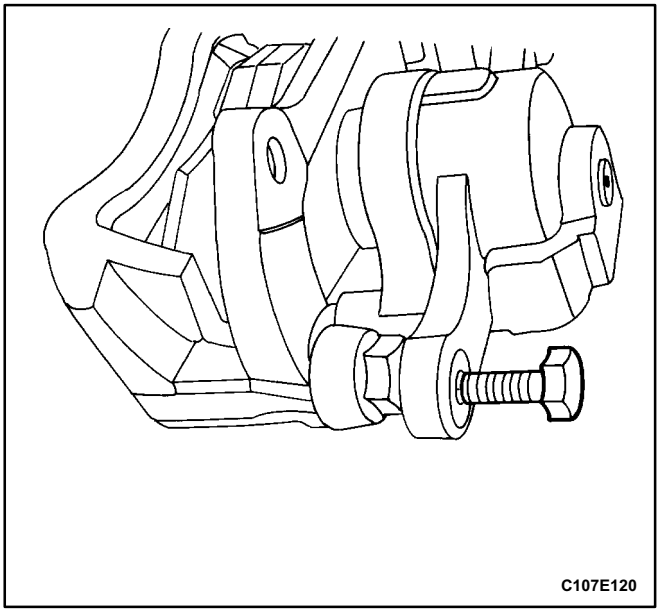

1. Remove the caliper assembly. Refer to „Caliper Assembly" in this section.
2. Plug the caliper housing inlet port and the brake hose end to prevent contamination or fluid loss.
3. Remove and discard the guide pin bolts.

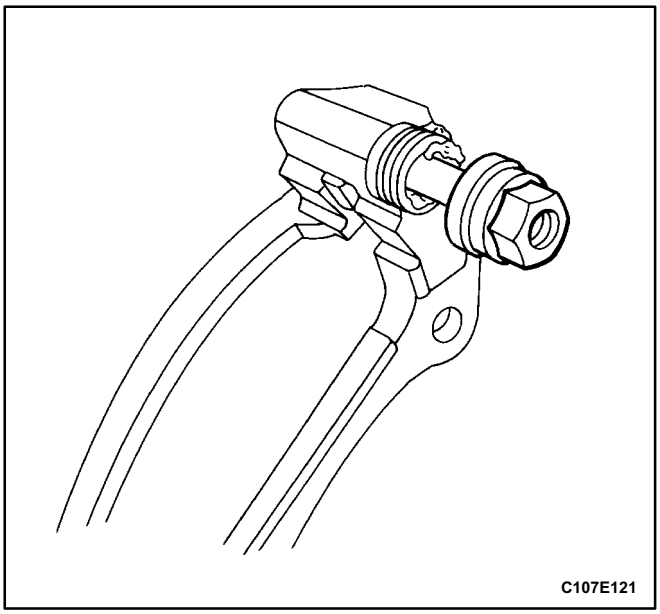

4. Remove the caliper piston housing assembly.
5. Remove the guide pins and the boots, plugging the holes of the anchor bracket to prevent contamination. Discard the boots.

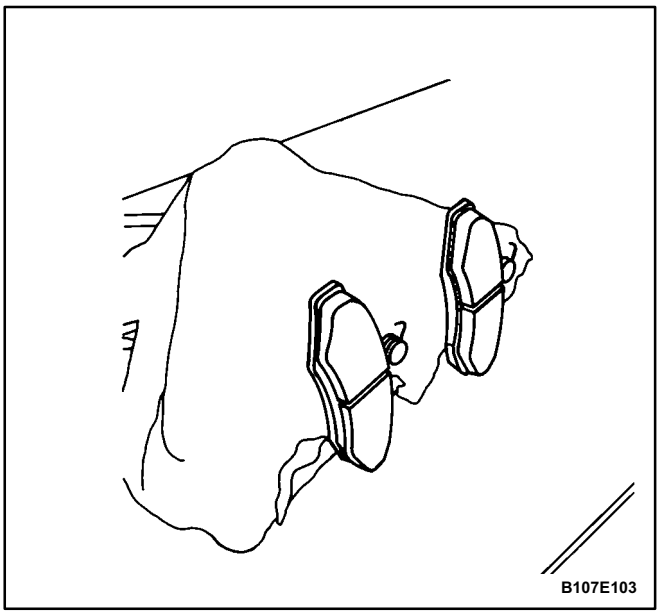

6. Remove the inner and the outer pads of each rear pad brake set from the brake anchor bracket on each side of the vehicle. For the minimum thickness measurement, refer to „Lining Inspection" in this section.

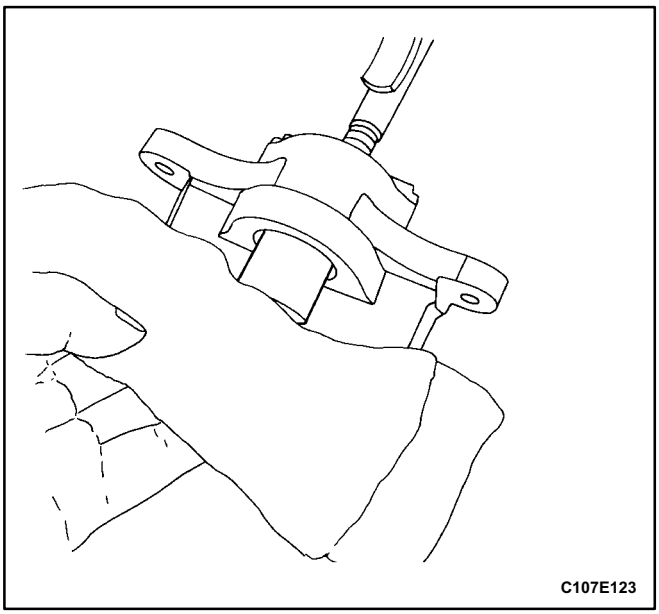

7. Clean all residue from the disc pad guide surfaces on the anchor bracket and the caliper housing.
8. Inspect the anchor bracket, and replace it if corroded, worn, or damaged.
9. Place a clean shop towel between the piston and the caliper housing.

Caution: Do not place fingers in front of the piston in an attempt to catch it or protect it when applying compressed air or light air pressure at the housing inlet port. Such action could result in serious injury.

10. Progressively increase the air pressure until the piston is forced out of the bore.

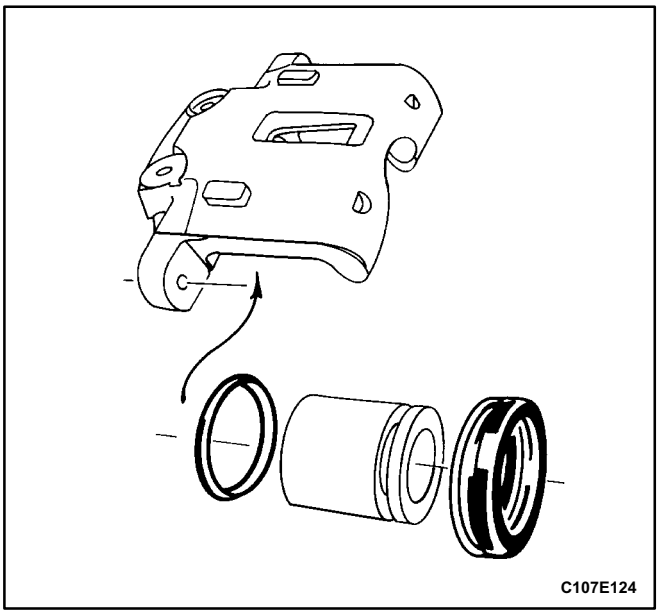

11. Remove and discard the outer boot.

Important: Be careful not to damage the piston bore or the seal groove when removing the inner seal, especially when using a tool, such as a screwdriver.

12. Remove and discard the inner seal.

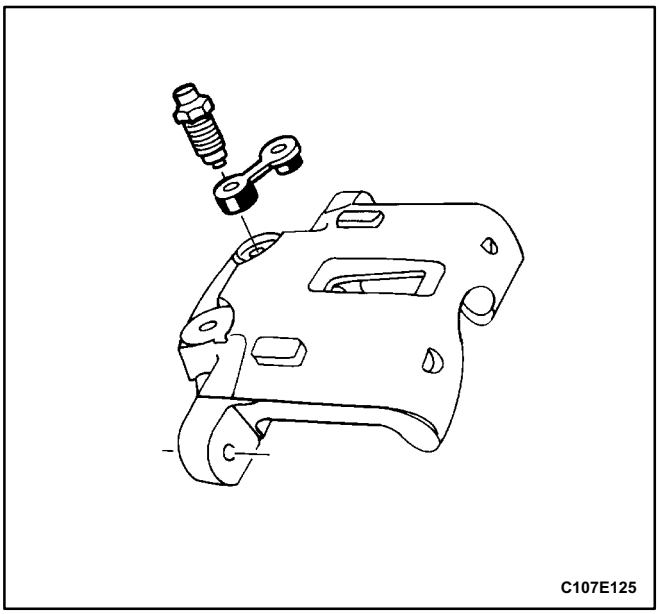

13. Remove and discard the caliper bleeder valve dust cover.
14. Remove the caliper bleeder valve.

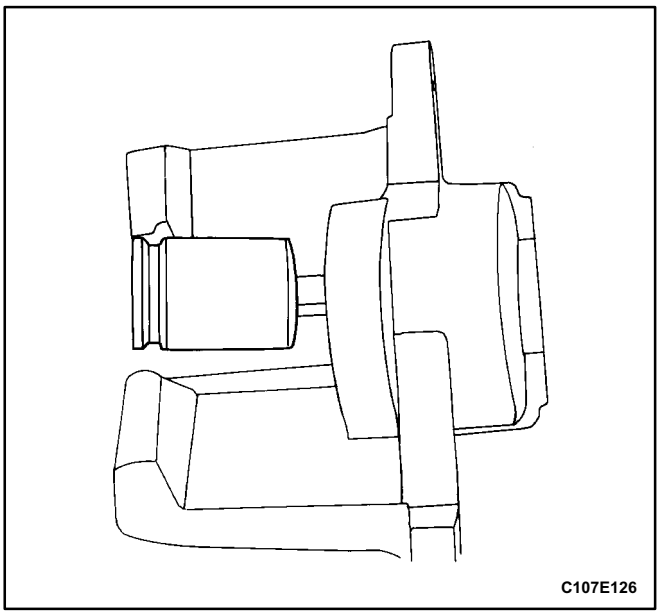

Assembly Procedure

Caution: Be extremely careful to keep the alcohol and any debris away from the eyes to avoid serious injury.

Notice: Keep the rubber components away from the mineral oil to avoid damaging the components.

1. Clean all parts in denatured alcohol or the brake fluid.
2. Dry the parts with unlubricated compressed air.
3. Blow out all passages in the housing and the caliper bleeder valve.
4. Inspect the piston and the housing for scoring, nicks, and corrosion. Replace any components that are scored, nicked, or corroded.

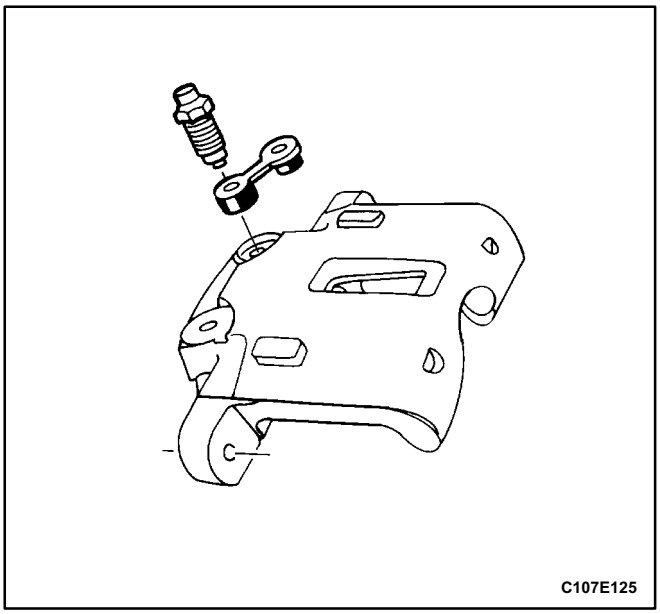

5. Inspect the caliper bleeder valve.

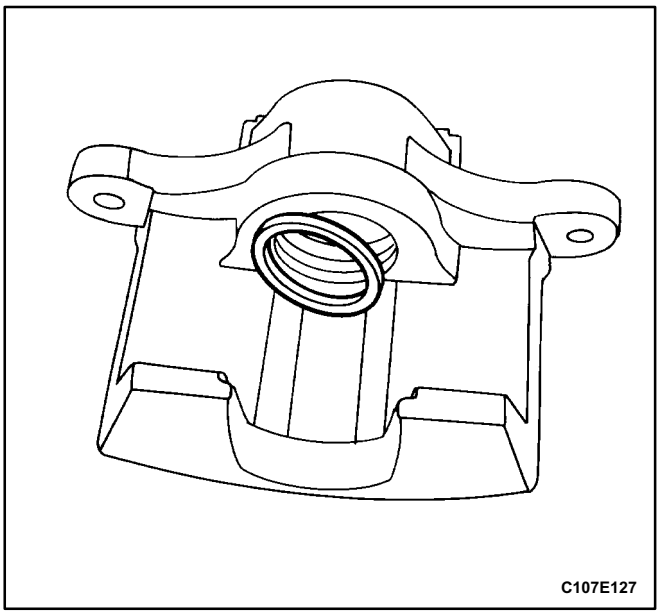

Important: Do not remove material from the piston or the caliper bore.

6. Lubricate a new piston inner seal and the housing bore with brake fluid or silicone grease.
7. Lubricate the piston with brake fluid.
8. Install the piston inner seal into the caliper housing groove. Make sure that the seal is not twisted.

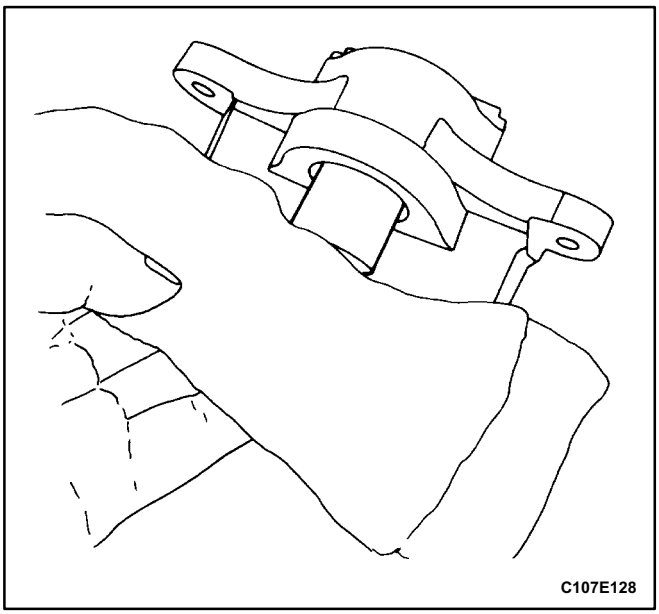

9. Install the boot over the open end of the piston and move the boot toward the closed end.
10. Push the boot away from the piston closed end and install it into the boot groove in the piston bore.
11. Slowly enter the piston into the bore by hand.
12. Apply steady hand pressure until the piston is fully seated in the bore.

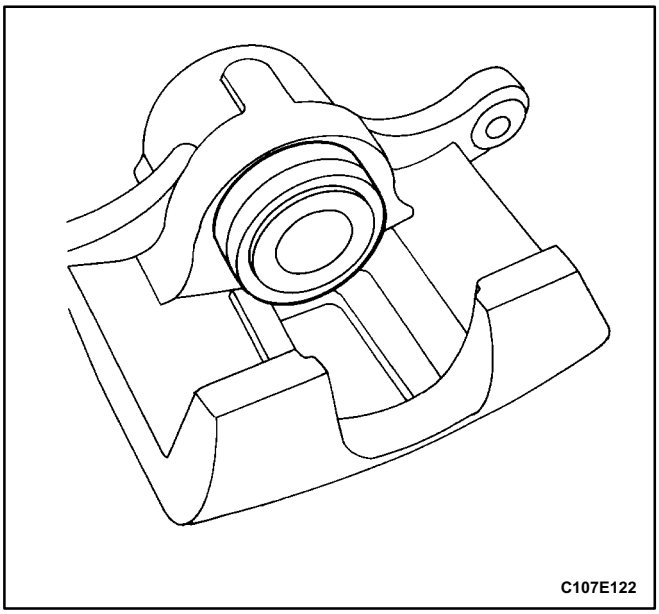

13. Inspect the piston and the outer boot, checking to see if the boot is properly engaged in the piston groove.

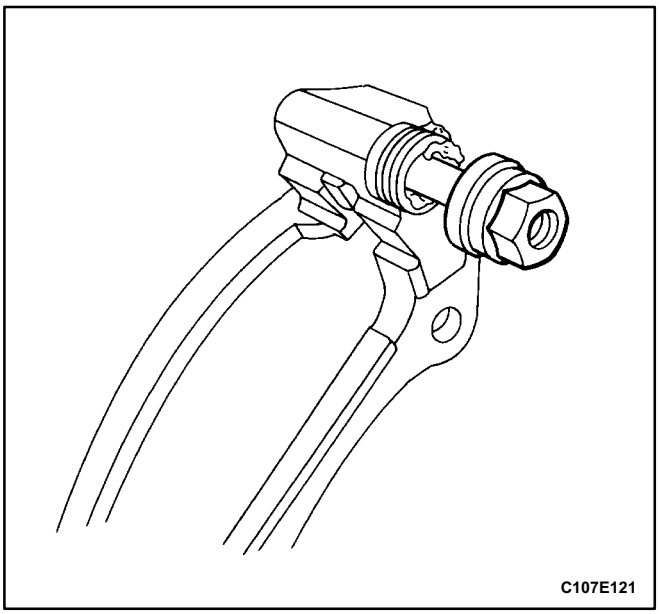

14. Coat the new guide pins with rubber grease and install the pins and the boots into the caliper housing assembly.

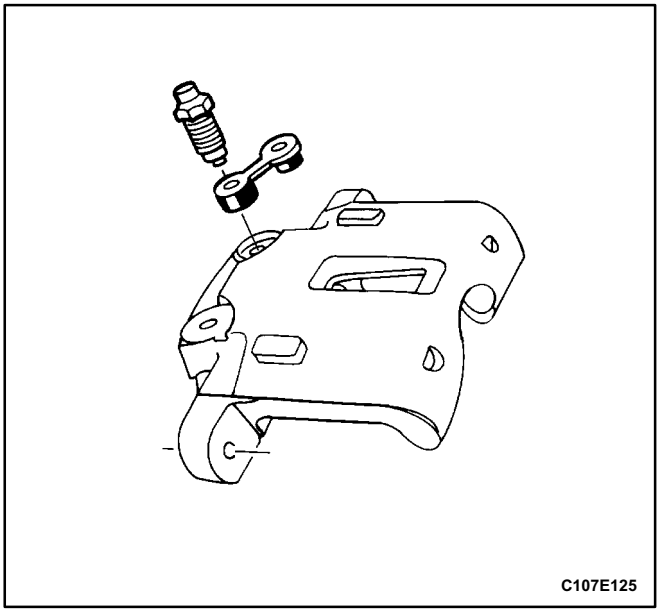

15. Assemble the new dust cover on the caliper bleeder valve and screw the caliper bleeder valve into the housing.

Tighten

Tighten the caliper bleeder valve to 6 N•m (53 lb•in).

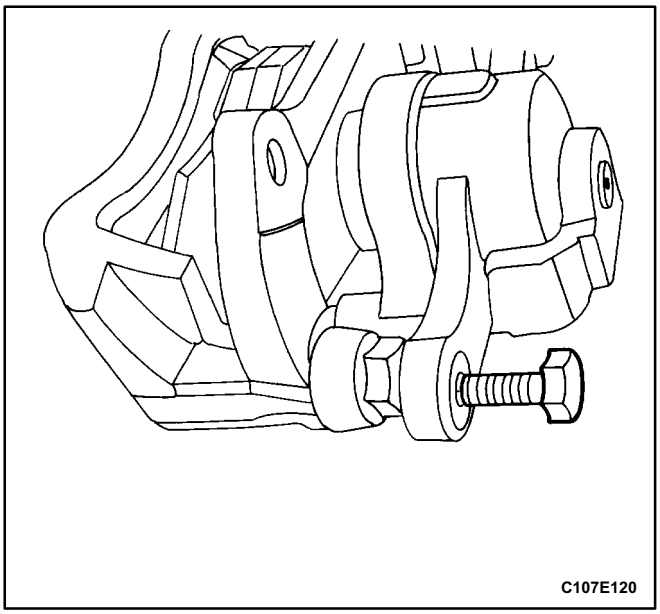

16. Install the disc pads on the anchor bracket.
17. Place the caliper housing assembly into its operating position.
18. If the brake pad springs are sticking through the caliper housing inspection hole, lift the caliper housing and make the necessary corrections to ensure that the springs are fully retained by the housing.
19. Install the new guide pin bolts.

Tighten

Tighten the caliper guide pin bolts to 31 N•m (23 lb•ft).

20. Install the caliper assembly. Refer to „Caliper Assembly” in this section.

GENERAL DESCRIPTION AND SYSTEM OPERATION

DISC BRAKE CALIPER ASSEMBLY

This caliper has a single bore and is mounted to the steering knuckle with two mounting bolts. Hydraulic pressure, created by applying the brake pedal, is converted by the caliper to a stopping force. This force acts equally against the piston and the bottom of the caliper bore to move the piston outward and to slide the caliper inward, resulting in a clamping action on the rotor. This clamping action forces the linings against the rotor, creating friction to stop the vehicle.

Important:

- Replace all components included in the repair kits used to service this caliper.
- Lubricate the rubber parts with clean brake fluid to ease assembly.
- Do not use lubricated shop air on brake parts, as damage to the rubber components may result.
- If any hydraulic component is removed or disconnected, it may be necessary to bleed all or part of the brake system.
- Replace the pads in axle sets only.
- The torque values specified are for dry, unlubricated fasteners.
- Perform the service operations on a clean bench, free from all mineral oil materials.

BLANK

SECTION 4F

ANTILOCK BRAKE SYSTEM AND TRACTION CONTROL SYSTEM

CAUTION: Disconnect the negative battery cable before removing or installing any electrical unit or when a tool or equipment could easily come in contact with exposed electrical terminals. Disconnecting this cable will help prevent personal injury and damage to the vehicle. The ignition must also be in LOCK unless otherwise noted.

TABLE OF CONTENTS

Specifications 4F-2
Fastener Tightening Specifications 4F-2
Special Tools 4F-2
Special Tools Table 4F-2
Schematic and Routing Diagrams 4F-3
ABS Circuit 4F-3
EBCM Connector Face View (Without Traction Control System) 4F-4
EBCM Connector Face View (With Traction Control System) 4F-5
Component Locator 4F-6
ABS and TCS System 4F-6
Diagnosis 4F-8
Diagnostic Circuit Check 4F-8
ABS Indicator Lamp Inoperative 4F-10
Power Supply To Control Module, No DTCs Stored 4F-14
ABS Indicator Lamp Illuminated Continuously, No DTCs Stored 4F-18
Traction Control System Indicator Lamp Inoperative 4F-20
SelfDiagnostics 4F-23
Displaying DTCs 4F-23
Clearing DTCs 4F-23
Intermittents and Poor Connections 4F-23
DTC 21 Right Front Wheel Speed Sensor Fault 4F-24
DTC 23 Right Front Wheel Speed Sensor Continuity Fault 4F-26
DTC 25 Left Front Wheel Speed Sensor Fault 4F-28
DTC 27 Left Front Wheel Speed Sensor Continuity Fault 4F-30
DTC 28 Wheel Speed Sensor Frequency Error 4F-32
DTC 31 Right Rear Wheel Speed Sensor Fault 4F-36
DTC 33 Right Rear Wheel Speed Sensor Continuity Fault 4F-38
DTC 35 Left Rear Wheel Speed Sensor Fault 4F-40
DTC 37 Left Rear Wheel Speed Sensor Continuity Fault 4F-42
DTC 41/42 Right Front Inlet and Outlet Valve Solenoid Fault 4F-44
DTC 43/44 Right Front Prime Line and Traction Control System (TCS) Pilot Valve Fault 4F-46
DTC 45/46 Left Front Inlet and Outlet Valve Solenoid Fault 4F-48
DTC 47/48 Left Front Prime Line and Traction Control System (TCS) Pilot Valve Fault 4F-50
DTC 50 Brake Light Switch (BLS) Fault 4F-52
DTC 51/52 Right Rear Inlet and Outlet Valve Solenoid Fault 4F-56
DTC 55/56 Left Rear Inlet and Outlet Valve Solenoid Fault 4F-58
DTC 61 Pump Motor or Pump Motor Relay Fault 4F-60
DTC 63 Valve Relay Circuit Fault 4F-62
DTC 65 Pump Fault Long Term (TCS Only) 4F-64
DTC 71 ABS Control Module Internal Fault . . . 4F-66
DTC 85 Low Voltage Test 4F-68
Maintenance and Repair 4F-71
On-Vehicle Service 4F-71
Service Precautions 4F-71
Bleeding System 4F-72
ABS 5.3 Assembly 4F-72
Front Wheel Speed Sensor 4F-73
Front Wheel Speed Sensor Jumper Harness 4F-74
Rear Wheel Speed Sensor 4F-76
Rear Wheel Speed Sensor Jumper Harness 4F-77
System Fuse 4F-79
Indicators 4F-79

General Description and System Operation 4F-80
Basic Knowledge Required 4F-80
ABS System Components 4F-80
Base Braking Mode 4F-82
Antilock Braking Mode 4F-83
Traction Control Mode 4F-85
Tires and ABS/TCS 4F-87
Electronic Brake Control Module (EBCM) 4F-87
Front Wheel Speed Sensors 4F-87
Front Wheel Speed Sensor Rings 4F-88
Rear Wheel Speed Sensors and Rings 4F-88
Valve Relay and Pump Motor Relay 4F-88
Wiring Harness 4F-88
Indicators 4F-88

SPECIFICATIONS

FASTENER TIGHTENING SPECIFICATIONS

Application	N•m	Lb•Ft	Lb•In
ABS 5.3 Mounting Nuts	9	-	80
Brake Pipe Nuts	12	-	106
EBCM Mounting Screws	3	-	27
Front Wheel Speed Sensor Bolt	8	-	71
Rear Wheel Speed Sensor Bolt	8	-	71

SPECIAL TOOLS

SPECIAL TOOLS TABLE

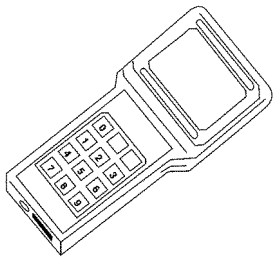 A107F057	**Scan Tool**

SCHEMATIC AND ROUTING DIAGRAMS

ABS CIRCUIT

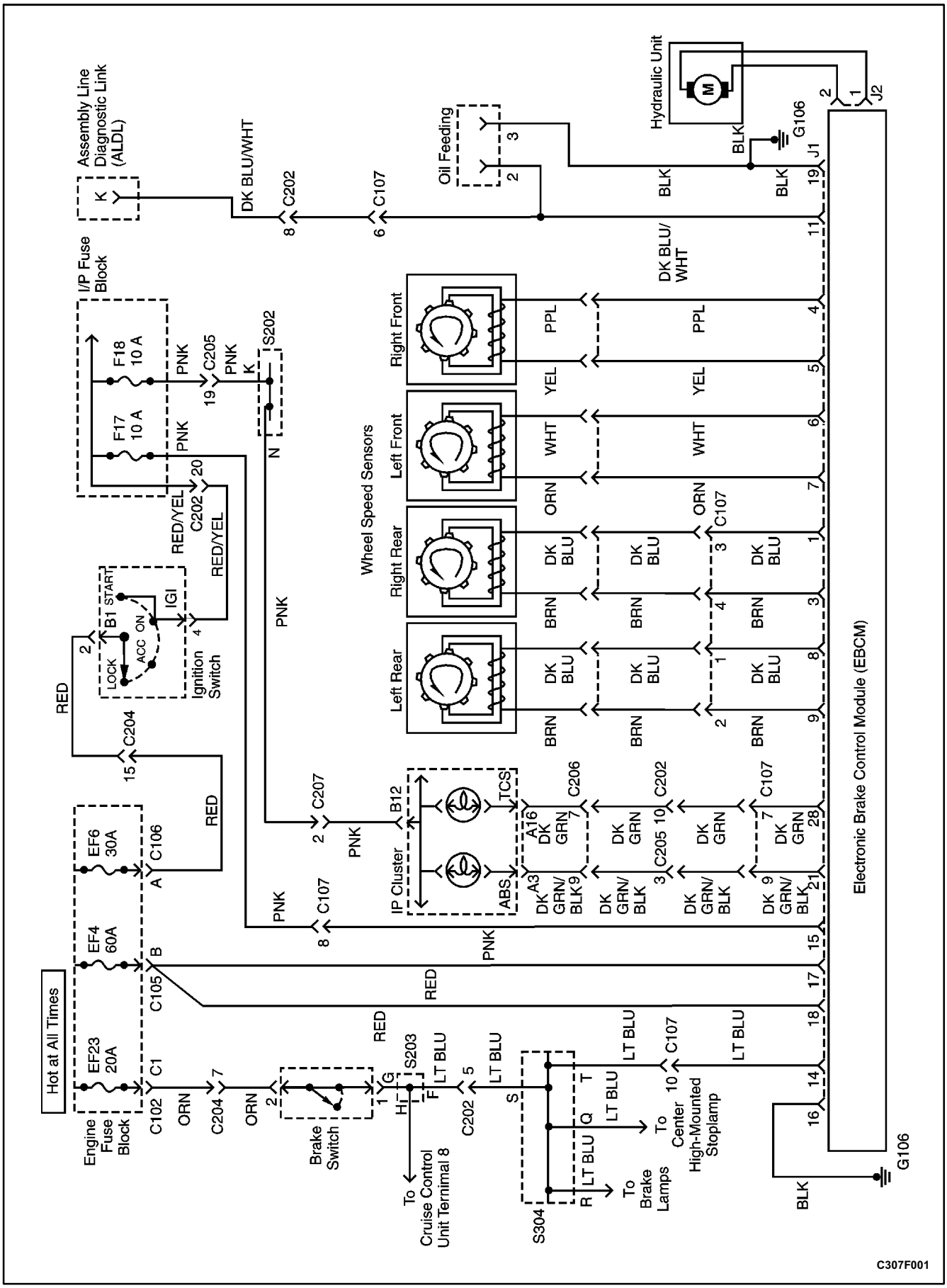

EBCM CONNECTOR FACE VIEW (WITHOUT TRACTION CONTROL SYSTEM)

EBCM Connector J1

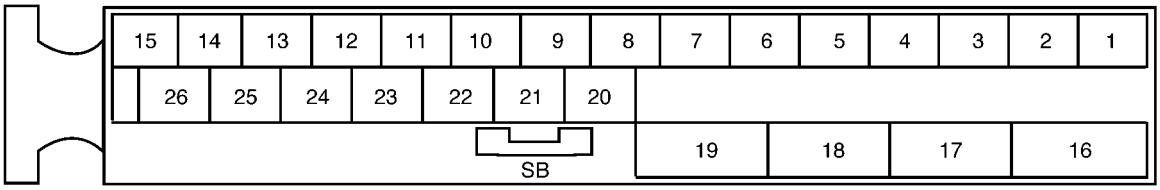

C107F035

Pin	Color	Circuit
1	DK BLU	Right Rear Ground
2	-	Not Used
3	BRN	Right Rear Sensor
4	PPL	Right Front Ground
5	YEL	Right Front Sensor
6	WHT	Left Front Ground
7	ORN	Left Front Sensor
8	DK BLU	Left Rear Ground
9	BRN	Left Rear Sensor
10	-	Not Used
11	DK BLU/WHT	Serial Data Link
12	-	Not Used
13	-	Not Used
14	LT BLU	Brake Light Switch

Pin	Color	Circuit
15	PNK	Switched Ignition
16	BLK	Motor Ground
17	RED	Battery
18	RED	Battery
19	BLK	Instrument Ground
20	-	Not Used
21	DK GRN/BLK	ABS Warning Lamp
22	-	Not Used
23	-	Not Used
24	-	Not Used
25	-	Not Used
26	-	Not Used
SB	-	Shorting Bar

EBCM CONNECTOR FACE VIEW (WITH TRACTION CONTROL SYSTEM)

EBCM Connector J1

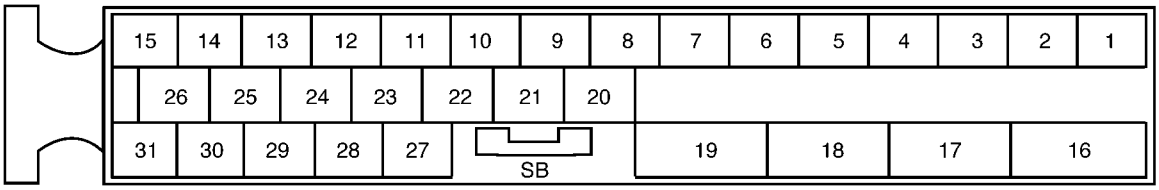

C107F036

Pin	Color	Circuit
1	DK BLU	Right Rear Ground
2	-	Not Used
3	BRN	Right Rear Sensor
4	PPL	Right Front Ground
5	YEL	Right Front Sensor
6	WHT	Left Front Ground
7	ORN	Left Front Sensor
8	DK BLU	Left Rear Ground
9	BRN	Left Rear Sensor
10	-	Not Used
11	DK BLU/WHT	Serial Data Link
12	-	Not Used
13	-	Not Used
14	LT BLU	Brake Light Switch
15	PNK	Switched Ignition
16	BLK	Motor Ground

Pin	Color	Circuit
17	RED	Battery
18	RED	Battery
19	BLK	Instrument Ground
20	-	Not Used
21	DK GRN/BLK	ABS Warning Lamp
22	-	Not Used
23	-	Not Used
24	-	Not Used
25	-	Not Used
26	-	Not Used
27	-	Not Used
28	DK GRN	TCS Warning Lamp
29	-	Not Used
30	-	Not Used
31	-	Not Used
SB	-	Shorting Bar

COMPONENT LOCATOR

ABS AND TCS SYSTEM DRIVE

(Left-Hand Drive Shown, Right-Hand Drive Similar)

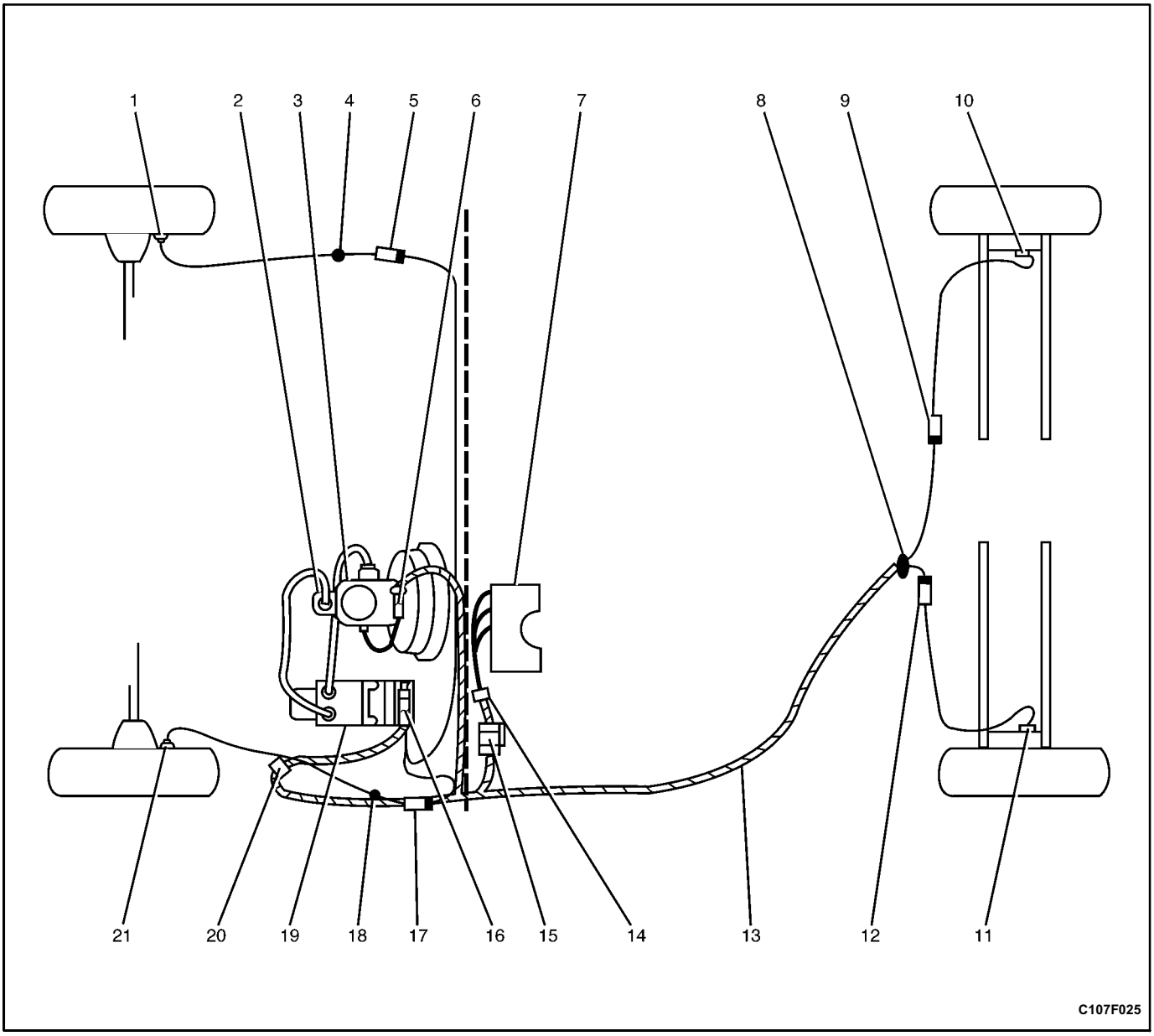

1 Right Front Wheel Speed Sensor
2 Brake Master Cylinder
3 Master Cylinder Reservoir
4 Grommet
5 Right Front Wheel Speed Sensor Connector
6 Brake Fluid Level Switch Connector
7 Instrument Cluster
8 Grommet
9 Right Rear Wheel Speed Sensor Connector
10 Right Rear Wheel Speed Sensor
11 Left Rear Wheel Speed Sensor
12 Left Rear Wheel Speed Sensor Connector
13 Body Wiring Harness
14 Connector C206
15 Connectors C202, C205
16 EBCM Connector J1
17 Left Front Speed Sensor Connector
18 Grommet
19 Hydraulic Modulator with Attached EBCM
20 Connector C107
21 Left Front Wheel Speed Sensor

BLANK

DIAGNOSIS

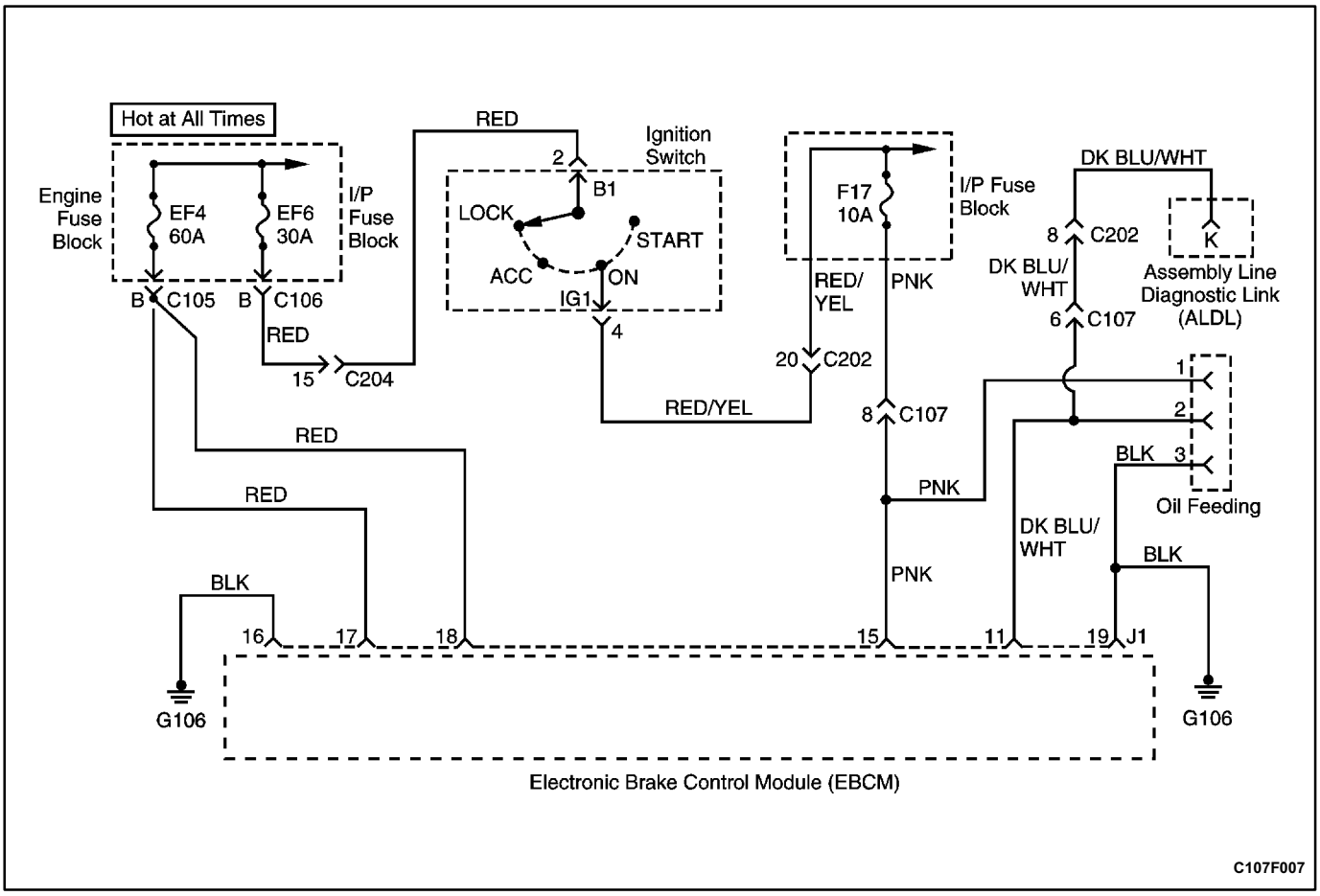

DIAGNOSTIC CIRCUIT CHECK

The Diagnostic Circuit Check is an organized approach to identifying a problem created by an antilock brake system (ABS) malfunction. It must be the starting point for any ABS complaint diagnosis because it directs the service technician to the next logical step in diagnosing the complaint.

Diagnostic Process

Perform the following steps in order when servicing the ABS/TCS system. Failure to do so may result in the loss of important diagnostic data and may lead to difficulties and time consuming diagnosis procedures.

1. Perform the tests of the table below.
2. Perform a road test if directed by the table.
   - Test drive the vehicle while using the snapshot feature of the scan tool.
   - Perform normal acceleration, stopping, and turning maneuvers.
   - If this does not reproduce the malfunction, perform an ABS stop or TCS maneuver on a low friction surface such as gravel.
3. Clear the diagnostic trouble codes (DTCs) after all system malfunctions have been corrected.

Diagnostic Circuit Check

Step	Action	Value	Yes	No
1	1. Install the scan tool. 2. Turn ignition switch to ON. 3. Select the Data List mode. Is the scan tool receiving data from the electronic brake control module (EBCM) ?	-	Go to *Step 2*	Go to *Step 7*

Diagnostic Circuit Check (Cont'd)

Step	Action	Value	Yes	No
2	Check the display. Are there any current DTCs displayed?	-	Refer to the applicable DTC table	Go to *Step 3*
3	1. Turn the ignition switch to LOCK for 10 seconds. 2. Turn the ignition switch to ON and observe the ABS indicator. Does the indicator light for 2 seconds and then go off?	-	Go to *Step 5*	Go to *Step 4*
4	Check the ABS indicator. Did the ABS indicator turn on and stay on?	-	Go to „ABS Indicator Lamp Illuminated Constantly”	Go to „ABS Indicator Lamp Inoperative”
5	Check whether the vehicle is equipped with traction control. Is the vehicle equipped with traction control?	-	Go to *Step 6*	Go to *Step 13*
6	1. Turn the ignition switch to LOCK for 10 seconds. 2. Turn the ignition switch to ON and observe the TCS indicator. Does the indicator light for 2 seconds and then go off?	-	Go to *Step 13*	Go to „Traction Control System Indicator Lamp Inoperative”
7	1. Turn the ignition switch to LOCK. 2. Disconnect the EBCM harness connector J1. 3. Turn the ignition switch to ON. 4. Use a digital voltmeter (DVM) to measure the voltage from ground to terminal 15, 17, and 18 of EBCM harness connector J1. Is the voltage within the specified value on each terminal?	11-14 V	Go to *Step 8*	Go to „Power Supply to Control Module, No DTCs Stored”
8	1. Turn the ignition switch to LOCK. 2. Use a DVM to measure the resistance from the EBCM harness connector J1, terminals 16 and 19 to ground. Is the resistance equal to the specified value?	≈ 0 Ω	Go to *Step 10*	Go to *Step 9*
9	Repair the open in the circuit BLK that failed. Is the repair complete?	-	System OK	-
10	Use a DVM to measure the resistance between terminal 11 of the EBCM harness connector J1 and terminal K of the assembly line diagnostic link (ALDL). Is the resistance below the specified value?	2 Ω	Go to *Step 11*	Go to *Step 12*
11	Replace the ABS unit assembly. Is the repair complete?	-	System OK	-
12	Repair the open or high resistance in circuit DK BLU/WHT between terminal 11 of the EBCM harness connector J1 and terminal K of the ALDL jack. Is the repair complete?	-	Go to *Step 1*	-
13	Perform the road test described above. Are any DTCs set?	-	Go to the table for the DTC	System OK

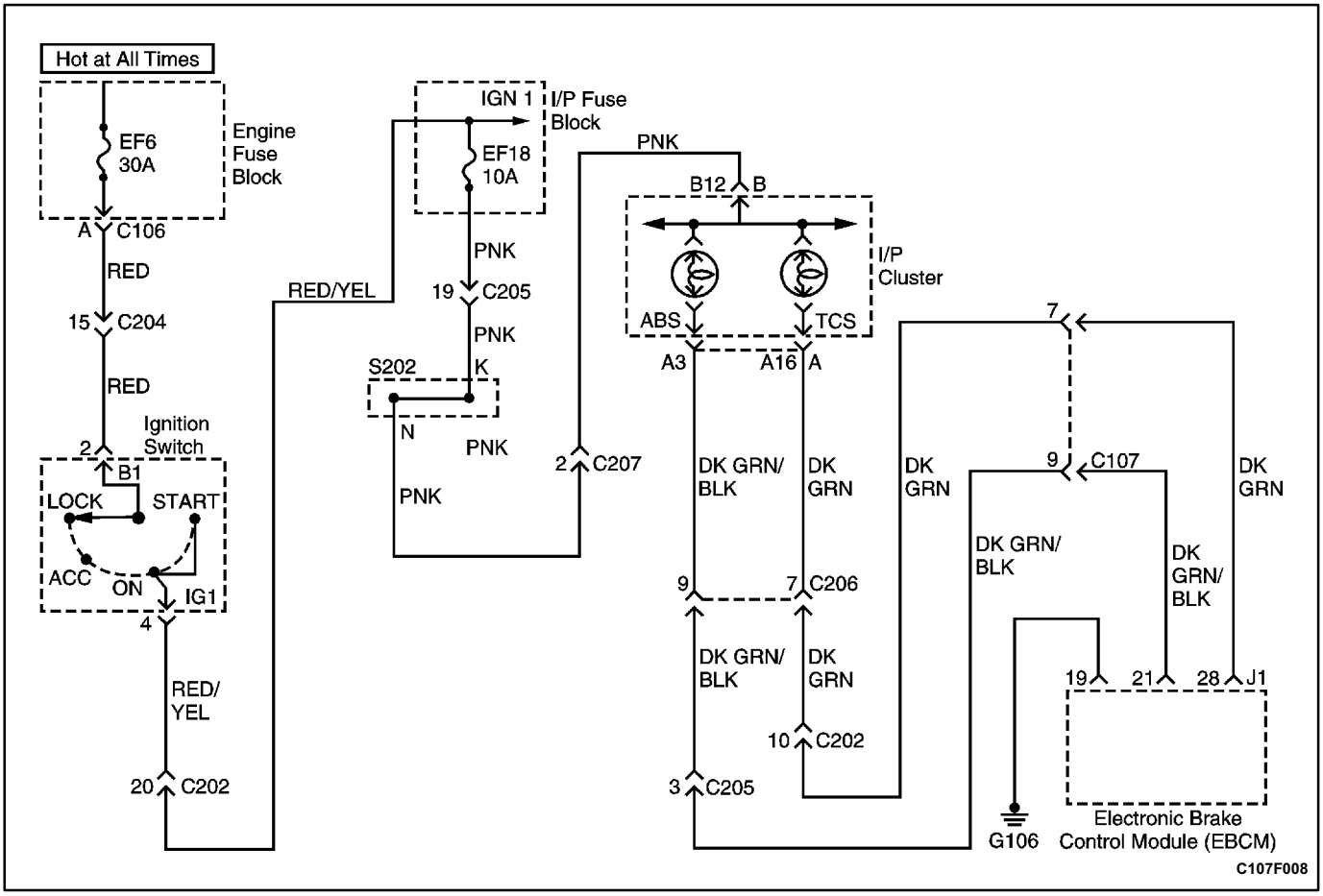

ABS INDICATOR LAMP INOPERATIVE

Circuit Description

Battery voltage is supplied to the ABS warning lamp with the ignition switch in the ON or START positions. The warning lamp can be activated only by the ABS control module internally supplying ground to terminal 21 or by the shorting bar in the ABS module connector J1 when it is disconnected from the module.

Diagnosis

This procedure checks for a problem in the wiring, a faulty ground, a voltage supply problem, a burned out indicator lamp, or a contact problem in a connector.

Cause(s)

- A fuse has blown.
- The indicator lamp has burned out.
- There is a corroded or broken connector terminal.
- There is a faulty ground connection.
- There is a broken wire in a wiring harness.
- The EBCM is faulty.

Test Description

The number(s) below refer to step(s) on the diagnostic table.

1. This test checks for any DTCs that may cause the ABS indicator lamp to be inoperative.
2. This test verifies an inoperative lamp condition.
3. This test checks for voltage on the lamp circuit.
4. This begins a series of tests of the circuit from the indicator lamp to the EBCM and ground.

19. This begins a series of tests of the voltage supply circuits that power the indicator lamp.

ABS Indicator Lamp Inoperative

Step	Action	Value(s)	Yes	No
1	Install the scan tool and check for any DTCs. Is any DTC set?	-	Go to the chart for the DTC	Go to *Step 2*
2	1. Turn the ignition switch to LOCK. 2. Disconnect the scan tool. 3. Turn the ignition switch to ON. 4. Observe the ABS indicator lamp. Does the lamp illuminate for about 2 seconds, then turn off?	-	Go to „Intermittents and Poor Connections”	Go to *Step 3*
3	With the ignition still ON, observe the oil pressure lamp. Is the oil pressure lamp illuminated?	-	Go to *Step 4*	Go to *Step 19*
4	1. Turn the ignition switch to LOCK. 2. Disconnect connector J1 from the electronic brake control module (EBCM). 3. Turn the ignition switch to ON. Does the ABS indicator illuminate?	-	Go to *Step 5*	Go to *Step 8*
5	1. Turn the ignition switch to LOCK. 2. Examine terminals 19 and 21 at the EBCM connector J1 on both the ABS wiring harness and on the EBCM. Is there a poor connection at any of these terminals?	-	Go to *Step 6*	Go to *Step 7*
6	Repair the faulty terminals or replace the ABS unit as required. Is the repair complete?	-	System OK	-
7	Replace the ABS unit. Is the repair complete?	-	System OK	-
8	1. Turn the ignition switch to LOCK. 2. Disconnect the wire from the negative battery terminal. 3. Measure the resistance between the negative battery wire, which is attached to ground, and the shorting bar in the EBCM connector J1. Does the resistance match the specified value?	0 Ω	Go to *Step 10*	Go to *Step 9*
9	Repair the open or high resistance in the circuit from EBCM connector J1, terminal 19 to ground G106. Is the repair complete?	-	System OK	-
10	1. Remove the I/P cluster. 2. Remove and check the ABS indicator bulb. Is the bulb burned out?	-	Go to *Step 11*	Go to *Step 12*
11	1. Replace the ABS indicator bulb. 2. Install the I/P cluster. Is the repair complete?	-	System OK	-
12	Check the continuity at the I/P cluster connector terminal A3. Does the ohmmeter show the specified value?	0 Ω	Go to *Step 14*	Go to *Step 13*
13	Repair the contact at the I/P cluster connector terminal A3. Is the repair complete?	-	System OK	-

ABS Indicator Lamp Inoperative (Cont'd)

Step	Action	Value(s)	Yes	No
14	Check the wiring harnesses and the connectors in circuit DK GRN/BLK from the I/P cluster terminal A3 to terminal 21 of the EBCM connector J1. Does the ohmmeter show the specified value?	∞	Go to *Step 15*	Go to *Step 16*
15	Repair the open or high resistance found. Is the repair complete?	-	System OK	-
16	Check for continuity between terminal 19 of the ABS connector J1 and ground G106. Does the ground connection match the specified value?	0 Ω	Go to *Step 17*	Go to *Step 18*
17	Replace the ABS unit. Is the repair complete?	-	System OK	-
18	Repair the continuity problem between terminal 19 of the EBCM connector J1 and ground G106. Is the repair complete?	-	System OK	-
19	1. Turn the ignition switch to LOCK. 2. Check fuse F18 in the I/P fuse block. Is this fuse blown?	-	Go to *Step 20*	Go to *Step 21*
20	Replace fuse F18. Is the repair complete?	-	System OK	-
21	Check fuse EF6 in the engine fuse block. Is this fuse blown?	-	Go to *Step 22*	Go to *Step 23*
22	Replace fuse EF6. Is the repair complete?	-	System OK	-
23	Measure the voltage at terminal 2 of the ignition switch connector by backprobing. Does the voltage match the specified value?	11-14 V	Go to *Step 25*	Go to *Step 24*
24	1. Check circuit RED between terminal A of C106 at the engine fuse block and terminal 2 of the ignition switch for continuity. 2. Repair any open or high resistance found. Is the repair complete?	-	System OK	-
25	1. Turn the ignition switch to ON. 2. Backprobe terminal 4 (RED/YEL) of the ignition switch connector. Does the voltage match the specified value?	11-14 V	Go to *Step 27*	Go to *Step 26*
26	Replace the ignition switch. Is the repair complete?	-	System OK	-
27	1. Turn the ignition switch to LOCK. 2. Check circuit RED/YEL from terminal 4 of the ignition switch to fuse F18 in the I/P fuse block. Does the ohmmeter show the specified value?	∞	Go to *Step 28*	Go to *Step 29*
28	Repair the open or the high resistance. Is the repair complete?	-	System OK	-
29	1. Remove the instrument cluster. 2. Check circuit PNK from fuse F18 to terminal B12 of the I/P cluster connector B. 3. Repair any open or high resistance found in a wiring harness, splice pack, or connector. Is the repair complete?	-	System OK	-

BLANK

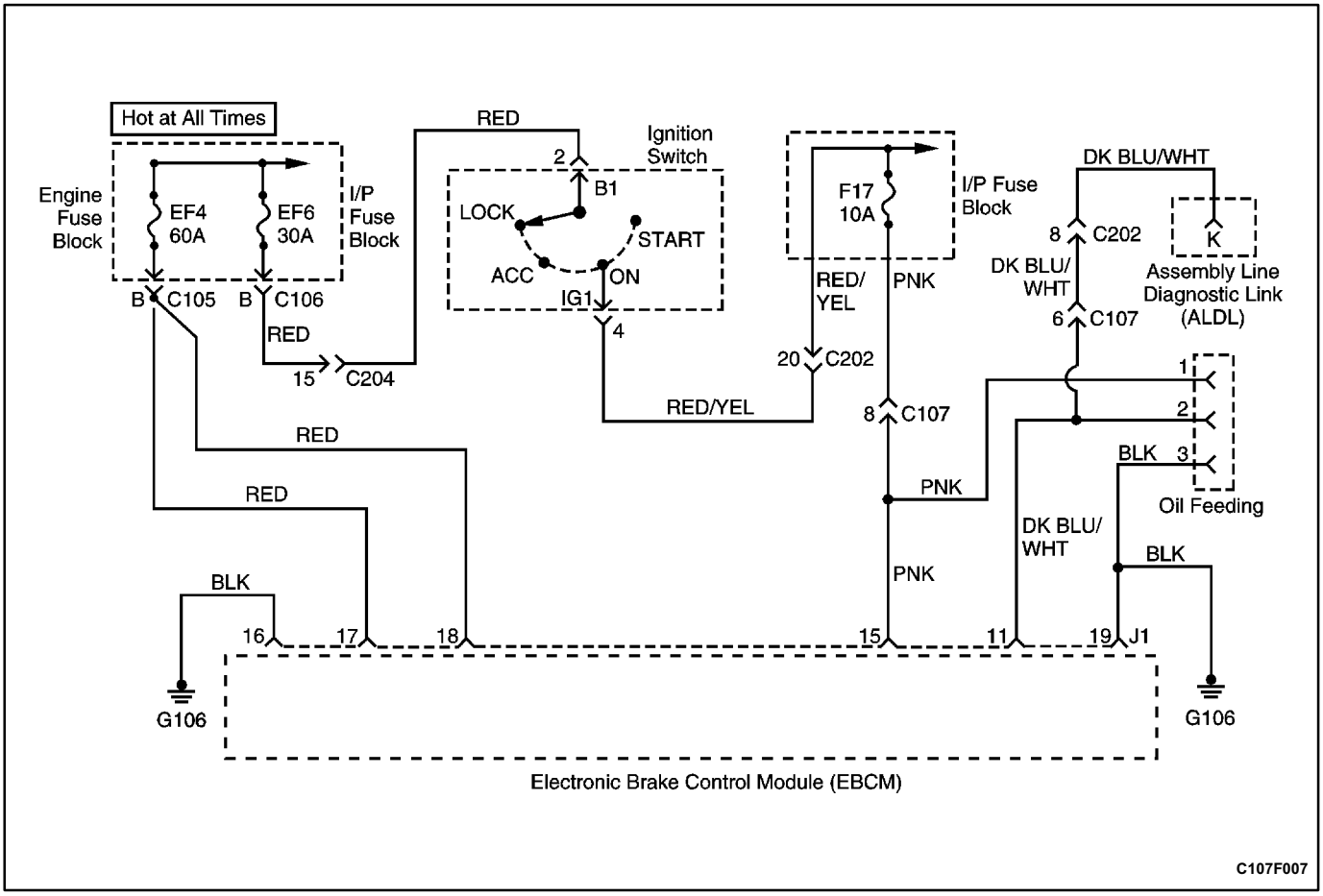

POWER SUPPLY TO CONTROL MODULE, NO DTCs STORED

Circuit Description

Battery voltage is supplied to the electronic brake control module (EBCM) through fuse F17 in the I/P fuse block, to terminal 15 of the EBCM connector J1. The voltage is present when the ignition switch is in the ON or START position.

Diagnosis

This test checks for battery output, proper grounding, blown fuses, a faulty ignition switch, and problems in the circuitry.

Cause(s)

- The battery is defective.
- There is a defective ground connection.
- A connector is damaged.
- A wire is broken or shorted.
- A fuse is blown.
- The ignition switch is malfunctioning.

Fail Action

ABS action is disabled during the period of low voltage, and the ABS warning lamp is ON for the remainder of the ignition cycle.

Test Description

The number(s) below refer to step(s) on the diagnostic table.

1. This step determines whether there is voltage at the battery and the high current source.
7. This step checks for voltage at the ignition 1 source.
11. This step begins the check for voltage at the EBCM end of the ABS harness.
15. This step checks for a defective ground connection.
16. This is a check for a defective EBCM connector.

Diagnostic Aids

It is very important to perform a thorough inspection of the wiring and the connectors. Failure to do so may result in misdiagnosis, causing part replacement with a reappearance of the malfunction.

Power Supply to Control Module, No DTCs Stored

Step	Action	Value(s)	Yes	No
1	Check the voltage at the battery. Is the voltage within the specified value?	11-14 V	Go to *Step 3*	Go to *Step 2*
2	Charge or replace the battery as required. Is the repair complete?	-	System OK	-
3	Check fuse EF4 in the engine fuse block. Is the fuse blown?	-	Go to *Step 4*	Go to *Step 8*
4	1. Replace fuse EF4. 2. Turn the ignition to ON. Does the fuse blow again?	-	Go to *Step 6*	Go to *Step 5*
5	Check the ABS function. Is the repair complete?	-	System OK	-
6	1. Turn the ignition to OFF. 2. Remove fuse EF4. 3. Disconnect the ABS connector J1 from the EBCM. 4. Measure the resistance to ground at terminals 17 and 18. Does the ohmmeter show the specified value?	0 Ω	Go to *Step 7*	Go to *Step 25*
7	Repair the short to ground in circuit RED between terminal B of engine fuse block connector C105 and the ABS harness EBCM connector J1. Is the repair complete?	-	System OK	-
8	Check fuse EF6 in the engine fuse block. Is the fuse blown?	-	Go to *Step 9*	Go to *Step 13*
9	1. Replace fuse EF6. 2. Turn the ignition to ON. Does the fuse blow again?	-	Go to *Step 11*	Go to *Step 10*
10	Check the ABS function. Is the repair complete?	-	System OK	-
11	1. Turn the ignition to OFF. 2. Remove fuse EF6. 3. Disconnect ABS connector J1 from the EBCM. 4. Measure the resistance to ground at terminal 15. Does the ohmmeter show the specified value?	0 Ω	Go to *Step 12*	Go to *Step 25*
12	1. Examine circuit RED between terminal A of engine fuse block connector C106 and terminal 2 of the ignition switch. 2. Examine circuit RED/YEL from terminal 4 of the ignition switch to fuse F17 in the I/P fuse block. 3. Examine circuit PNK from fuse F17 in the I/P fuse block to terminal 15 of the ABS EBCM connector J1. 4. Repair any short to ground found in the wiring or the ignition switch. Is the repair complete?	-	System OK	-
13	Check fuse F17 in the I/P fuse block. Is the fuse blown?	–	Go to *Step 14*	Go to *Step 18*

Power Supply to Control Module, No DTCs Stored (Cont'd)

Step	Action	Value	Yes	No
14	1. Replace fuse F17. 2. Turn the ignition to ON. Does the fuse blow again?	-	Go to *Step 16*	Go to *Step 15*
15	Check the ABS function. Is the repair complete?	-	System OK	-
16	1. Turn the ignition to OFF. 2. Remove fuse F17. 3. Disconnect ABS connector J1 from the EBCM. 4. Measure the resistance to ground at terminal 15. Does the ohmmeter show the specified value?	0 Ω	Go to *Step 17*	Go to *Step 25*
17	Repair the short to ground in circuit PNK fuse F17 of the I/P fuse block and terminal 15 of the ABS harness EBCM connector J1. Is the repair complete?	-	System OK	-
18	1. Disconnect the EBCM connector J1 from the EBCM. 2. Turn the ignition to ON. 3. Check for the presence of battery voltage between ground and terminal 17, and between ground and terminal 18. Is the voltage within the specified value?	11-14 V	Go to *Step 20*	Go to *Step 19*
19	1. Turn the ignition switch to OFF. 2. Trace the RED wires between terminals 17 and 18 of the EBCM connector J1 to terminal B of connector C105 at the engine fuse block. 3. Repair the open in this circuit. Is the repair complete?	-	System OK	-
20	Check the voltage between ground and terminal 15 of the EBCM connector J1. Is the voltage within the specified value?	11-14 V	Go to *Step 22*	Go to *Step 21*
21	1. Turn the ignition switch to OFF. 2. Trace circuit PNK between terminal 15 of the ABS harness EBCM connector to fuse F17 in the I/P fuse block. 3. Trace circuit RED/YEL from fuse F17 of the I/P fuse block to terminal 4 (IG1) of the ignition switch. 4. Trace circuit RED from terminal 2 (B1) of the ignition switch to terminal A of connector C106 at the engine fuse block and to fuse EF6. 5. Repair the open in the wiring or possibly bad connector terminal, defective ignition switch, or blown fuse EF6. Is the repair complete?	-	System OK	-
22	1. Turn the ignition to OFF. 2. Check the resistance between ground and terminals 19 and 16 of the EBCM connector J1. Does the ohmmeter show the specified value?	0 Ω	Go to *Step 23*	Go to *Step 26*
23	Examine terminals 15, 19, 17, 18, and 16 of the EBCM connector. Is there a defective terminal?	-	Go to *Step 24*	Go to *Step 25*

Power Supply to Control Module, No DTCs Stored (Cont'd)

Step	Action	Value	Yes	No
24	Repair the defective terminal or replace the connector or wiring harness as required. Is the repair complete?	-	System OK	-
25	Replace the ABS unit. Is the repair complete?	-	System OK	-
26	Repair the defective ground connection. Is the repair complete?	-	System OK	-

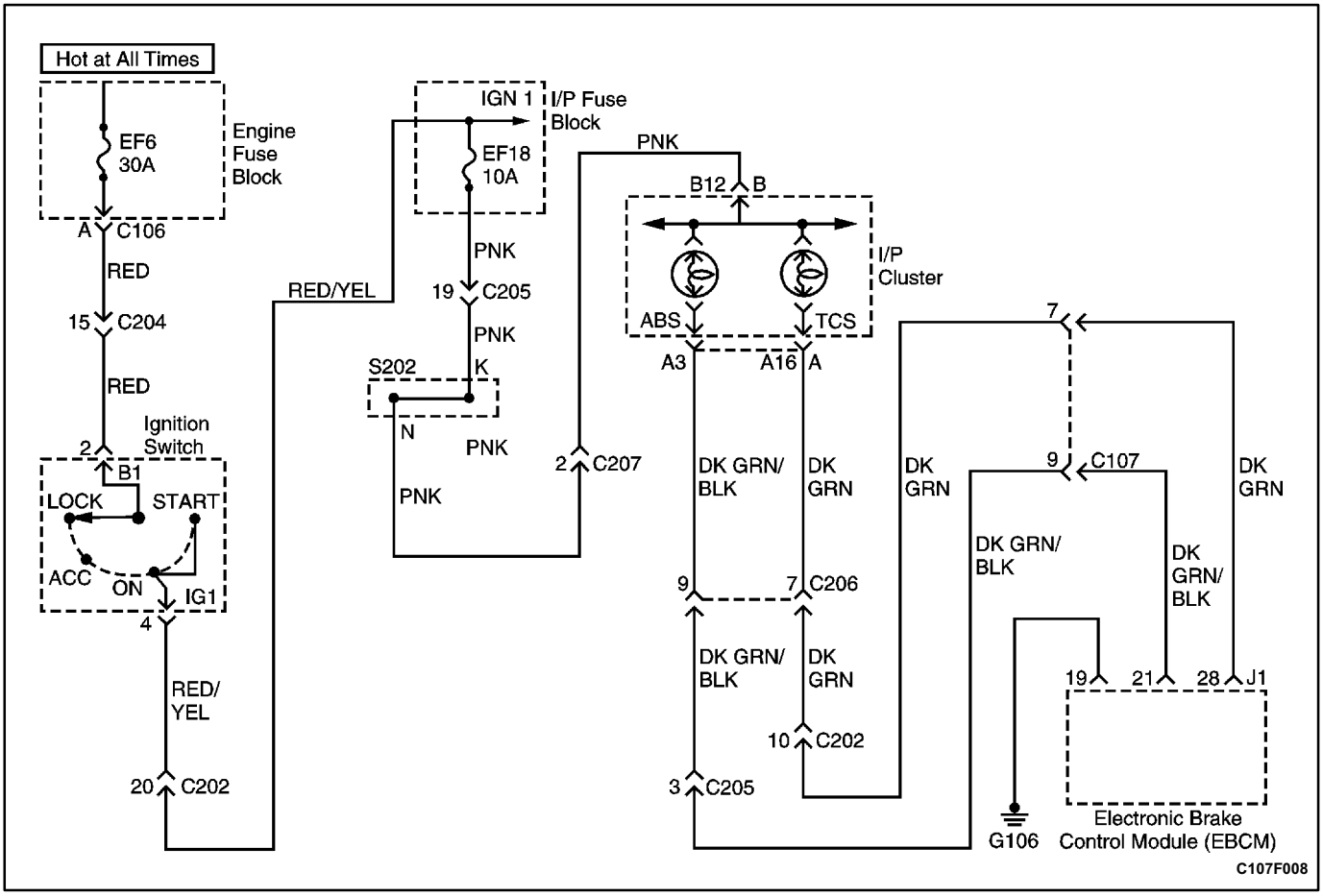

ABS INDICATOR LAMP ILLUMINATED CONTINUOUSLY, NO DTCs STORED

Circuit Description

Battery voltage is supplied to the ABS warning lamp with the ignition switch in the ON or START position. The warning lamp should be activated only by the ABS control module internally supplying ground to terminal 21.

Diagnosis

This procedure checks for a short to ground in the wiring or a defective electronic brake control module (EBCM).

Cause(s)

- There is a short to ground in the circuit between the cluster terminal A3 and the EBCM terminal 21.
- The EBCM is faulty.

Test Description

The number(s) below refer to step(s) on the diagnostic table.

3. This step determines whether the EBCM is faulty.
5. This begins a search for a short to ground in the circuit between the ABS indicator lamp and the EBCM.

ABS Indicator Lamp Illuminated Continuously, No DTCs Stored

Step	Action	Value(s)	Yes	No
1	Check the EBCM connector J1. Is it connected properly?	-	Go to *Step 3*	Go to *Step 2*
2	Connect the EBCM connector J1. Is the repair complete?	-	System OK	-
3	1. Disconnect the EBCM connector J1. 2. Turn the ignition switch to ON. 3. Use an insulated tool to push the shorting bar in the connector away from terminal 21. Does the ABS indicator lamp go out?	-	Go to *Step 4*	Go to *Step 5*
4	Replace the ABS unit. Is the repair complete?	-	System OK	-
5	1. Turn the ignition switch to OFF. 2. Connect the EBCM connector J1. 3. Disconnect connector C107. 4. Turn the ignition switch to ON. Does the ABS indicator lamp illuminate?	-	Go to *Step 7*	Go to *Step 6*
6	Repair the short to ground in circuit DK GRN/BLK between connector C107 and the EBCM connector J1. Is the repair complete?	-	System OK	-
7	1. Turn the ignition switch to OFF. 2. Connect connector C107. 3. Disconnect connector C205. 4. Turn the ignition switch to ON. Does the ABS indicator lamp illuminate?	-	Go to *Step 9*	Go to *Step 8*
8	Repair the short to ground in circuit DK GRN/BLK between connector C205 and connector C107. Is the repair complete?	-	System OK	-
9	1. Turn the ignition switch to OFF. 2. Connect connector C205. 3. Disconnect connector C206. 4. Turn the ignition switch to ON. Does the ABS indicator lamp illuminate?	-	Go to *Step 10*	Go to *Step 11*
10	Repair the short to ground in circuit DK GRN/BLK between I/P cluster connector A and connector C206. Is the repair complete?	-	System OK	-
11	Repair the short to ground in circuit DK GRN/BLK between connector C206 and connector C205. Is the repair complete?	-	System OK	-

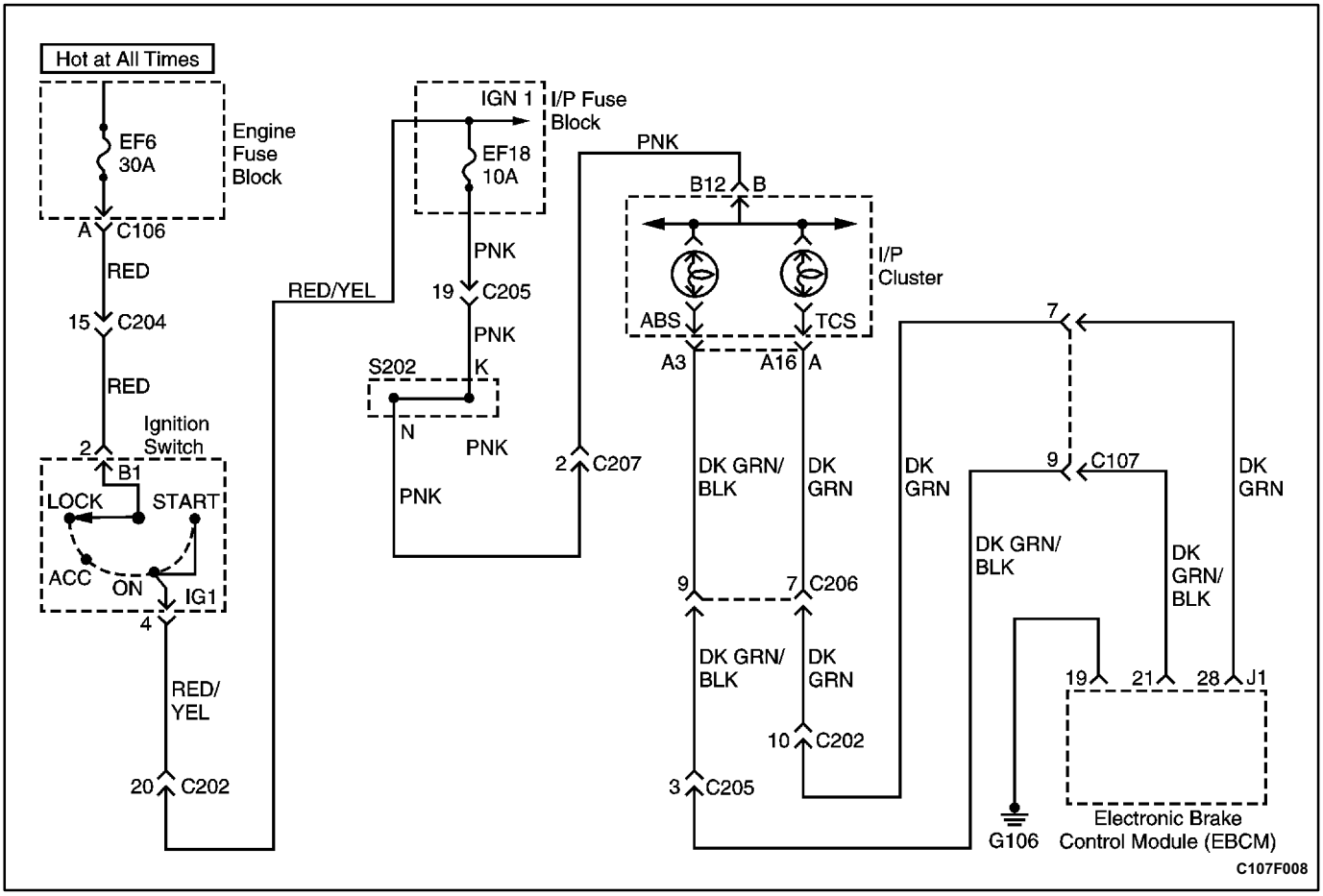

TRACTION CONTROL SYSTEM INDICATOR LAMP INOPERATIVE

Circuit Description

Battery voltage is supplied to the TCS warning lamp with the ignition switch in the ON or START position. The warning lamp can be activated only by the ABS control module internally supplying ground to terminal 28.

Diagnosis

This procedure checks for a problem in the wiring, a faulty ground, a voltage supply problem, a burned out indicator lamp, or a contact problem in a connector.

Cause(s)

- A fuse has blown.
- The indicator lamp has burned out.
- There is a corroded or broken connector terminal.
- There is a faulty ground connection.
- There is a broken wire in a wiring harness.
- The EBCM is faulty.

Test Description

The number(s) below refer to step(s) on the diagnostic table.

1. This test checks for any DTCs that may cause the TCS indicator lamp to be inoperative.
2. This test verifies an inoperative lamp condition.
3. This test checks for voltage on the lamp circuit.
4. This begins a series of tests of the circuit from the indicator lamp to the EBCM and ground.

19. This begins a series of tests of the voltage supply circuits that power the indicator lamp.

Traction Control System Indicator Lamp Inoperative

Step	Action	Value(s)	Yes	No
1	Install the scan tool and check for any DTCs. Is any DTC set?	-	Go to the chart for the DTC	Go to *Step 2*
2	1. Turn the ignition switch to LOCK. 2. Disconnect the scan tool. 3. Turn the ignition switch to ON. 4. Observe the TCS indicator lamp. Does the lamp illuminate for about 2 seconds, then turn off?	-	Go to „Intermittents and Poor Connections”	Go to *Step 3*
3	With the ignition still ON, observe the oil pressure lamp. Is the oil pressure lamp illuminated?	-	Go to *Step 4*	Go to *Step 19*
4	1. Turn the ignition switch to LOCK. 2. Disconnect connector J1 from the EBCM. 3. Connect a jumper from terminal 28 to the grounding bar in the connector. 4. Turn the ignition switch to ON. Does the TCS indicator illuminate?	-	Go to *Step 5*	Go to *Step 8*
5	1. Turn the ignition switch to LOCK. 2. Examine terminals 19 and 28 at the EBCM connector J1 on both the ABS wiring harness and on the EBCM. Is there a poor connection at any of these terminals?	-	Go to *Step 6*	Go to *Step 7*
6	Repair the faulty terminals or replace the ABS unit as required. Is the repair complete?	-	System OK	-
7	Replace the ABS unit. Is the repair complete?	-	System OK	-
8	1. Turn the ignition switch to LOCK. 2. Disconnect the wire from the negative battery terminal. 3. Measure the resistance between the negative battery wire, which is attached to ground, and the shorting bar in the EBCM connector J1. Does the resistance match the specified value?	0 Ω	Go to *Step 10*	Go to *Step 9*
9	Repair the open or high resistance in the circuit from EBCM connector J1, terminal 19 to ground G106. Is the repair complete?	-	System OK	-
10	1. Remove the I/P cluster. 2. Remove and check the TCS indicator bulb. Is the bulb burned out?	-	Go to *Step 11*	Go to *Step 12*
11	1. Replace the TCS indicator bulb. 2. Replace the I/P cluster. Is the repair complete?	-	System OK	-
12	Check continuity at the I/P cluster connector terminal A16. Does the ohmmeter show the specified value?	0 Ω	Go to *Step 14*	Go to *Step 13*
13	Repair the contact at the I/P cluster connector terminal A16. Is the repair complete?	-	System OK	-

Traction Control System Indicator Lamp Inoperative (Cont'd)

Step	Action	Value	Yes	No
14	Check the wiring harnesses and connectors in circuit DK GRN from the I/P cluster terminal A16 to terminal 28 of the EBCM connector J1. Does the ohmmeter show the specified value?	∞	Go to *Step 15*	Go to *Step 16*
15	Repair the open or high resistance found. Is the repair complete?	-	System OK	-
16	Check for continuity between terminal 19 of the ABS connector J1 and ground G106. Does the ground connection match the specified value?	0 Ω	Go to *Step 17*	Go to *Step 18*
17	Replace the ABS unit. Is the repair complete?	-	System OK	-
18	Repair the continuity problem between terminal 19 of the EBCM connector J1 and ground G106. Is the repair complete?	-	System OK	-
19	1. Turn the ignition switch to LOCK. 2. Check fuse F18 in the I/P fuse block. Is this fuse blown?	-	Go to *Step 20*	Go to *Step 21*
20	Replace fuse F18. Is the repair complete?	-	System OK	-
21	Check fuse EF6 in the engine fuse block. Is this fuse blown?	-	Go to *Step 22*	Go to *Step 23*
22	Replace fuse EF6. Is the repair complete?	-	System OK	-
23	Measure the voltage at terminal 2 of the ignition switch connector by backprobing. Is the voltage within the specified value?	11-14 V	Go to *Step 25*	Go to *Step 24*
24	1. Check circuit RED between terminal A of C106 at the engine fuse block and terminal 2 of the ignition switch continuity. 2. Repair any open or high resistance found. Is the repair complete?	-	System OK	-
25	1. Turn the ignition switch to ON. 2. Backprobe terminal 4 (RED/YEL) of the ignition switch connector. Is the voltage within the specified value?	11-14 V	Go to *Step 27*	Go to *Step 26*
26	Replace the ignition switch. Is the repair complete?	-	System OK	-
27	1. Turn the ignition switch to LOCK. 2. Check circuit RED/YEL from terminal 4 of the ignition switch to fuse F18 in the I/P fuse block. Does the ohmmeter show the specified value?	∞	Go to *Step 28*	Go to *Step 29*
28	Repair the open or the high resistance. Is the repair complete?	-	System OK	-
29	1. Remove the I/P cluster. 2. Check circuit PNK from fuse F18 to terminal B12 of the I/P cluster connector B. 3. Repair any open or high resistance found in a wiring harness, a splice pack, or a connector. Is the repair complete?	-	System OK	-

SELF-DIAGNOSTICS

Important: The electronic brake control module (EBCM) turns the valve relay off when a diagnostic trouble code (DTC) is set. The scan tool will indicate that the valve relay is off when it is used to monitor the data list. This is normal and should not be considered a malfunction.

The EBCM performs system selfdiagnostics and can detect and often isolate system malfunctions. When it detects a malfunction, the EBCM sets a DTC that represents the malfunction, turns ON the ABS and/or the TCS indicators in most instances, and may disable the ABS and/or the TCS functions as necessary for the duration of the ignition cycle.

Once each ignition cycle, the EBCM performs an automatic test when the vehicle reaches 2.75 km/h (1.7 mph). In the course of this test, the system cycles each valve solenoid and the pump motor, along with the necessary relays, to check component operation. If the EBCM detects any malfunctions, it will set a DTC as described above.

DISPLAYING DTCs

Tools Required

Scan Tool

DTCs can be read through the use of the scan tool.

CLEARING DTCs

Tools Required

Scan Tool

The diagnostic trouble codes (DTCs) in the electronic brake control module (EBCM) memory are erased in one of two ways:

- Use the scan tool „Clear DTCs” selection.
- After 249 DTCfree ignition cycles.

These two methods are detailed below. Be sure to verify proper system operation and absence of DTCs when the clearing procedure is completed.

The EBCM will not permit DTC clearing until all DTCs have been displayed. Also, DTCs cannot be cleared by disconnecting the EBCM, disconnecting the battery cables, or turning the ignition switch to LOCK.

Scan Tool Method

The scan tool can clear ABS/TCS system DTCs using the mass storage cartridge.

1. Install the scan tool and the mass storage cartridge.
2. Select „Fault Memory.”
3. Select „Clear Fault Memory.”

Clearing the fault memory cannot reset a valve relay which was shut down when the fault was recognized. Changes are possible only after the fault has been eliminated and the next ignition cycle has begun.

Ignition Cycle Default

A DTC is erased from memory after 249 ignition cycles without any reappearance of that malfunction.

INTERMITTENTS AND POOR CONNECTIONS

As with most electronic systems, intermittent malfunctions may be difficult to diagnose accurately. The following is a method to try to isolate an intermittent malfunction, especially in wheel speed circuitry.

If an ABS malfunction occurs, the ABS indicator will illuminate during the ignition cycle in which the malfunction was detected. If it is an intermittent problem which seems to have corrected itself (ABS indicator off), a history DTC will be stored. Also stored will be the history data of the DTC at the time the malfunction occurred. Use the scan tool modular diagnostic system to read ABS history data.

Most intermittents are caused by faulty electrical connections or wiring, although a sticking relay or solenoid can occasionally be at fault.

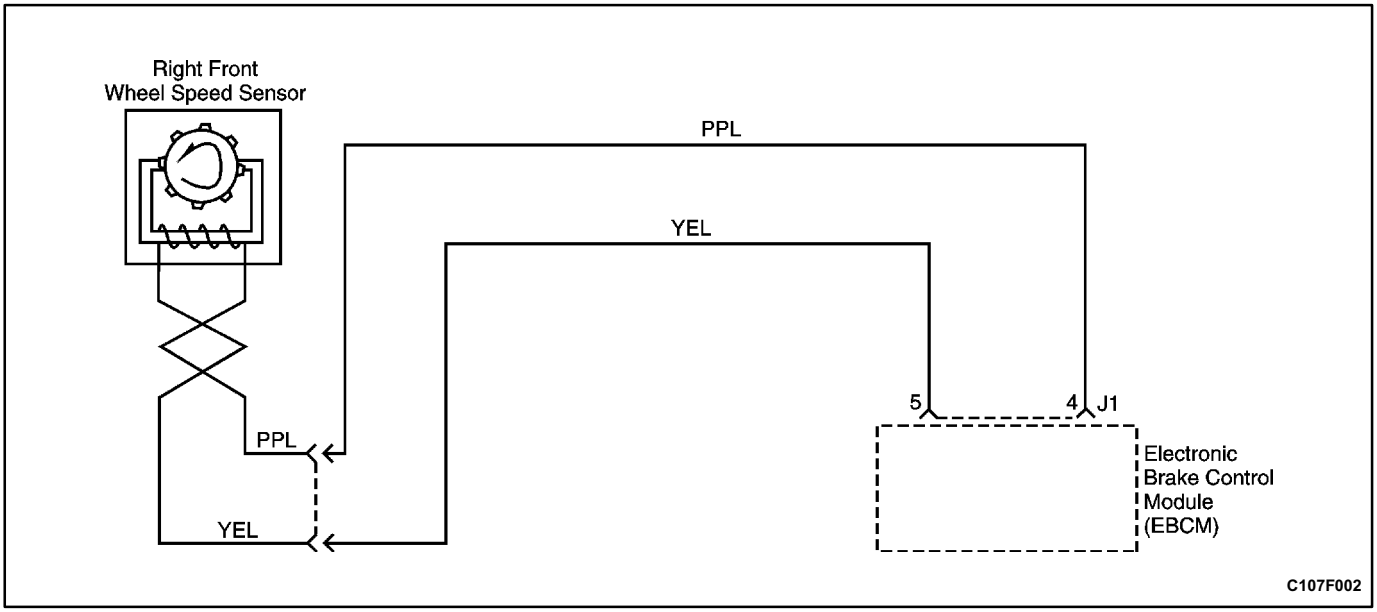

DIAGNOSTIC TROUBLE CODE (DTC) 21
RIGHT FRONT WHEEL SPEED SENSOR FAULT

Circuit Description

The toothed wheel generates a voltage pulse as it moves past the sensor. Each tooth gap tooth series on the wheel generates the pulses. The electronic brake control module (EBCM) uses the frequency of these pulses to determine the wheel speed. The voltage generated depends on the air gap between the sensor and the toothed wheel, and on the wheel speed.

Diagnosis

This procedure checks for a malfunctioning wheel speed sensor, a short to ground or to voltage in the wiring, or a contact problem in a connector.

Cause(s)

- The wheel speed sensor is defective or disconnected.
- There is a problem in the wiring.
- There is a problem with a connector.

Fail Action

ABS action is disabled, and the ABS warning lamp is ON.

Test Description

The number(s) below refer to step(s) on the diagnostic table.

1. This step begins an examination for a defective wheel speed sensor.
6. This step tests the wiring for a short to voltage.
8. This step tests the wiring for a short to ground.
10. This step tests for an open or high resistance in the wiring.

Diagnostic Aids

Be sure that the speed sensor wiring is properly routed and retained. This will help to prevent false signals due to the pickup of electrical noise.

It is very important to perform a thorough inspection of the wiring and the connectors. Failure to inspect the wiring and the connectors carefully and completely may result in misdiagnosis, causing part replacement with the reappearance of the malfunction.

You can use the scan tool to monitor wheel speeds during a road test. Watch the wheel speeds being displayed on the scan tool to see if any of the readings is unusual, such as one sensor varying in speed from the other three, a signal going intermittently high or low, etc. If this does not identify the intermittent, wet the speed sensor harness on the underside of the vehicle and perform a road test, monitoring the wheel speeds with the scan tool.

DTC 21 - Right Front Wheel Speed Sensor Fault

Step	Action	Value(s)	Yes	No
1	Examine the wheel speed sensor. Are there any signs of physical damage?	-	Go to *Step 3*	Go to *Step 2*

DTC 21 - Right Front Wheel Speed Sensor Fault (Cont'd)

Step	Action	Value	Yes	No
2	1. Turn the ignition switch to LOCK. 2. Disconnect the right front wheel speed sensor connector. 3. Use a digital voltmeter (DVM) to measure the resistance between the sensor terminals. Is the resistance within the specified value at approximately 25°C (77°F)?	1280-1920 Ω	Go to *Step 4*	Go to *Step 3*
3	Replace the wheel speed sensor. Is the repair complete?	-	System OK	-
4	1. Switch the DVM to the ac millivolt range. 2. Measure the voltage output of between the wheel speed sensor terminals while rotating the wheel about 1 revolution every 2 seconds. Is the output within the specified value?	≈ 120 mV	Go to *Step 6*	Go to *Step 5*
5	Replace the speed sensor or the toothed wheel as required. Is the repair complete?	-	System OK	-
6	1. Disconnect the harness from the EBCM. 2. Connect a DVM between ground and one terminal of the wheel speed connector. 3. Turn the ignition to ON. 4. Repeat the above test for the other terminal of the wheel speed connector. Is the voltage for either of these terminals within the specified value?	> 1 V	Go to *Step 7*	Go to *Step 8*
7	Repair the short to voltage in the affected circuit. Is the repair complete?	-	System OK	-
8	1. Turn the ignition switch to LOCK. 2. Measure the resistance to ground from terminal 4 at the harness EBCM connector. 3. Measure the resistance to ground from terminal 5 at the harness EBCM connector. Is the resistance at either circuit less than the specified value?	∞	Go to *Step 9*	Go to *Step 10*
9	Repair the short to ground in the affected circuit. Is the repair complete?	-	System OK	-
10	1. Measure the resistance between terminal 4 at the harness EBCM connector and the harness wheel speed sensor connector terminal connected to the PPL wire. 2. Measure the resistance between terminal 5 at the harness EBCM connector and the harness wheel speed sensor connector terminal connected to the YEL wire. Is the resistance on either circuit within the specified value?	> 5 Ω	Go to *Step 11*	Go to *Step 12*
11	Repair the open or high resistance in the affected circuit as required. Is the repair complete?	-	System OK	-
12	Replace the ABS unit. Is the repair complete?	-	System OK	-

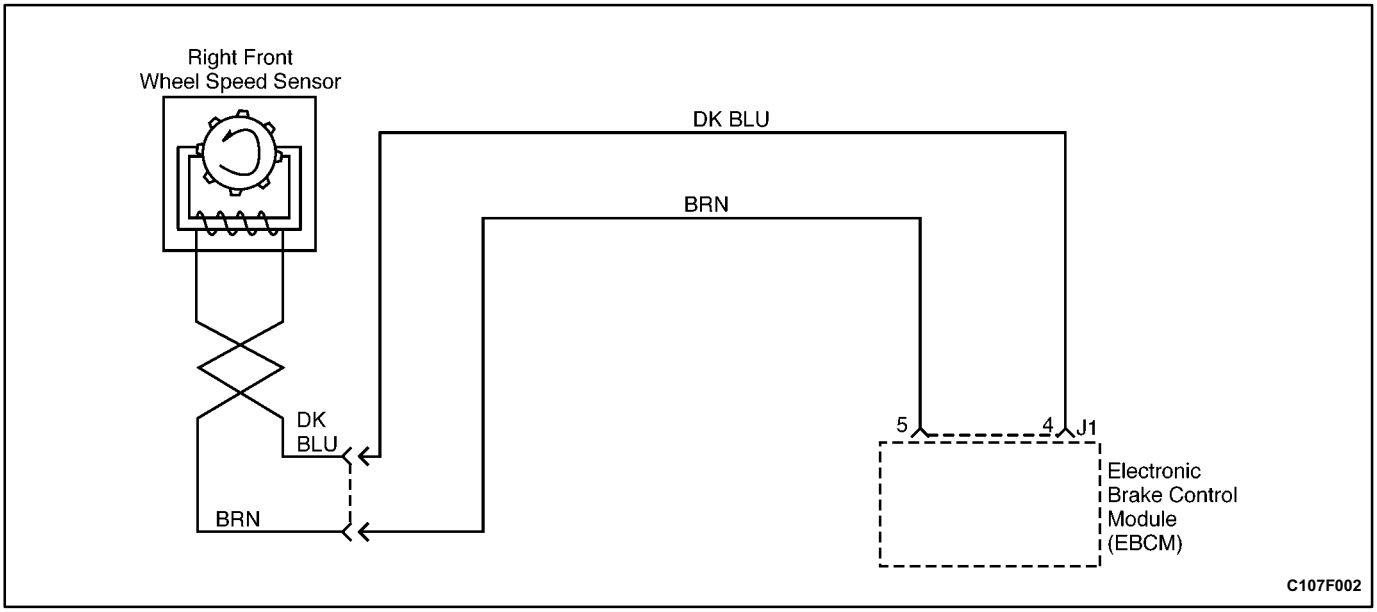

DIAGNOSTIC TROUBLE CODE (DTC) 23
RIGHT FRONT WHEEL SPEED SENSOR CONTINUITY FAULT

Circuit Description

The toothed wheel generates a voltage pulse as it moves past the sensor. Each tooth gap tooth series on the wheel generates the pulses. The electronic brake control module (EBCM) uses the frequency of these pulses to determine the wheel speed. The voltage generated depends on the air gap between the sensor and the toothed wheel, and on the wheel speed.

Diagnosis

This procedure checks for a malfunctioning wheel speed sensor, a short to ground or to voltage in the wiring, or a contact problem in a connector.

Cause(s)

- The wheel speed sensor is defective or disconnected.
- There is a problem in the wiring.
- There is a problem with a connector.

Fail Action

ABS action is disabled, and the ABS warning lamp is ON.

Test Description

The number(s) below refer to step(s) on the diagnostic table.

1. This step begins an examination for a defective wheel speed sensor.
4. This step tests the wiring for a short to voltage.
6. This step tests the wiring for a short to ground.
8. This step tests for an open or a high resistance in the wiring.

Diagnostic Aids

Be sure that the speed sensor wiring is properly routed and retained. This will help to prevent false signals due to the pickup of electrical noise.

It is very important to perform a thorough inspection of the wiring and connectors. Failure to inspect wiring and connectors carefully and completely may result in misdiagnosis, causing part replacement with the reappearance of the malfunction.

DTC 23 - Right Front Wheel Speed Sensor Continuity Fault

Step	Action	Value(s)	Yes	No
1	Examine the wheel speed sensor. Are there any signs of physical damage?	-	Go to *Step 3*	Go to *Step 2*
2	1. Turn the ignition switch to LOCK. 2. Disconnect the right front wheel speed sensor connector. 3. Use a digital voltmeter (DVM) to measure the resistance between the sensor terminals. Is the resistance within the specified value at approximately 25° C(77°F)?	1280-1920 Ω	Go to *Step 4*	Go to *Step 3*
3	Replace the wheel speed sensor. Is the repair complete?	-	System OK	-
4	1. Disconnect the harness from the EBCM. 2. Connect a DVM between ground and one terminal of the wheel speed connector. 3. Turn the ignition to ON. 4. Repeat the above test for the other terminal of the wheel speed connector. Is the voltage for either of these terminals within the specified value?	> 1 V	Go to *Step 5*	Go to *Step 6*
5	Repair the short to voltage in the affected circuit. Is the repair complete?	-	System OK	-
6	1. Turn the ignition switch to LOCK. 2. Measure the resistance to ground from terminal 4 at the harness EBCM connector. 3. Measure the resistance to ground from terminal 5 at the harness EBCM connector. Is the resistance at either circuit less than the specified value?	∞	Go to *Step 7*	Go to *Step 8*
7	Repair the short to ground in the affected circuit. Is the repair complete?	-	System OK	-
8	1. Measure the resistance between terminal 4 at the harness EBCM connector and the harness wheel speed sensor connector terminal connected to the PPL wire. 2. Measure the resistance between terminal 5 at the harness EBCM connector and the harness wheel speed sensor connector terminal connected to the YEL wire. Is the resistance on either circuit within the specified value?	> 5 Ω	Go to *Step 9*	Go to *Step 10*
9	Repair the open or high resistance in the affected circuit as required. Is the repair complete?	-	System OK	-
10	Replace the ABS unit. Is the repair complete?	-	System OK	-

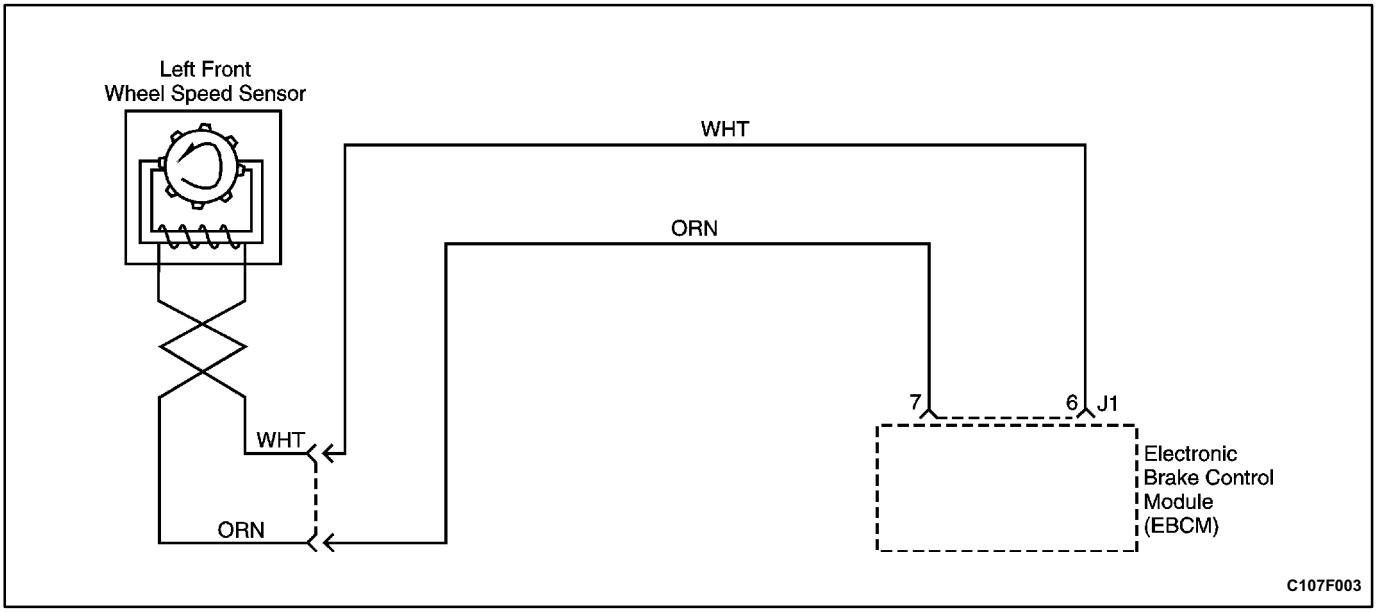

DIAGNOSTIC TROUBLE CODE (DTC) 25
LEFT FRONT WHEEL SPEED SENSOR FAULT

Circuit Description

The toothed wheel generates a voltage pulse as it moves past the sensor. Each tooth gap tooth series on the wheel generates the pulses. The electronic brake control module (EBCM) uses the frequency of these pulses to determine the wheel speed. The voltage generated depends on the air gap between the sensor and the toothed wheel, and on the wheel speed.

Diagnosis

This procedure checks for a malfunctioning wheel speed sensor, a short to ground or to voltage in the wiring, or a contact problem in a connector.

Cause(s)

- The wheel speed sensor is defective or disconnected.
- There is a problem in the wiring.
- There is a problem with a connector.

Fail Action

ABS action is disabled, and the ABS warning lamp is ON.

Test Description

The number(s) below refer to step(s) on the diagnostic table.

1. This step begins an examination for a defective wheel speed sensor.
4. This step tests the wiring for a short to voltage.
6. This step tests the wiring for a short to ground.
8. This step tests for an open or a high resistance in the wiring.

Diagnostic Aids

Be sure that the speed sensor wiring is properly routed and retained. This will help to prevent false signals due to the pickup of electrical noise.

It is very important to perform a thorough inspection of the wiring and the connectors. Failure to inspect the wiring and the connectors carefully and completely may result in misdiagnosis, causing part replacement with the reappearance of the malfunction.

You can use the scan tool to monitor wheel speeds during a road test. Watch the wheel speeds being displayed on the scan tool to see if any of the readings is unusual, such as one sensor varying in speed from the other three, a signal going intermittently high or low, etc. If this does not identify the intermittent, wet the speed sensor harness on the underside of the vehicle and perform a road test, monitoring the wheel speeds with the scan tool.

DTC 25 - Left Front Wheel Speed Sensor Fault

Step	Action	Value(s)	Yes	No
1	Examine the wheel speed sensor. Are there any signs of physical damage?	-	Go to *Step 3*	Go to *Step 2*

DTC 25 - Left Front Wheel Speed Sensor Fault (Cont'd)

Step	Action	Value(s)	Yes	No
2	1. Turn the ignition switch to LOCK. 2. Disconnect the left front wheel speed sensor connector. 3. Use a digital voltmeter (DVM) to measure the resistance between the sensor terminals. Is the resistance within the specified value at approximately 25°C (77°F)?	1280-1920 Ω	Go to *Step 4*	Go to *Step 3*
3	Replace the wheel speed sensor. Is the repair complete?	-	System OK	-
4	1. Switch the DVM to the ac millivolt range. 2. Measure the voltage output of between the wheel speed sensor terminals while rotating the wheel about 1 revolution every 2 seconds. Is the output within the specified value?	≈ 120 mV	Go to *Step 6*	Go to *Step 5*
5	Replace the speed sensor or the toothed wheel as required. Is the repair complete?	-	System OK	-
6	1. Disconnect the harness from the EBCM. 2. Connect a DVM between ground and one terminal of the wheel speed connector. 3. Turn the ignition to ON. 4. Repeat the above test for the other terminal of the wheel speed connector. Is the voltage for either of these terminals within the specified value?	> 1 V	Go to *Step 7*	Go to *Step 8*
7	Repair the short to voltage in the affected circuit. Is the repair complete?	-	System OK	-
8	1. Turn the ignition switch to LOCK. 2. Measure the resistance to ground from terminal 6 at the harness EBCM connector. 3. Measure the resistance to ground from terminal 7 at the harness EBCM connector. Is the resistance at either circuit less than the specified value?	∞	Go to *Step 9*	Go to *Step 10*
9	Repair the short to ground in the affected circuit. Is the repair complete?	-	System OK	-
10	1. Measure the resistance between terminal 6 at the harness EBCM connector and the harness wheel speed sensor connector terminal connected to the WHT wire. 2. Measure the resistance between terminal 7 at the harness EBCM connector and the harness wheel speed sensor connector terminal connected to the ORN wire. Is the resistance on either circuit within the specified value?	> 5 Ω	Go to *Step 11*	Go to *Step 12*
11	Repair the open or high resistance in the affected circuit as required. Is the repair complete?	-	System OK	-
12	Replace the ABS unit. Is the repair complete?	-	System OK	-

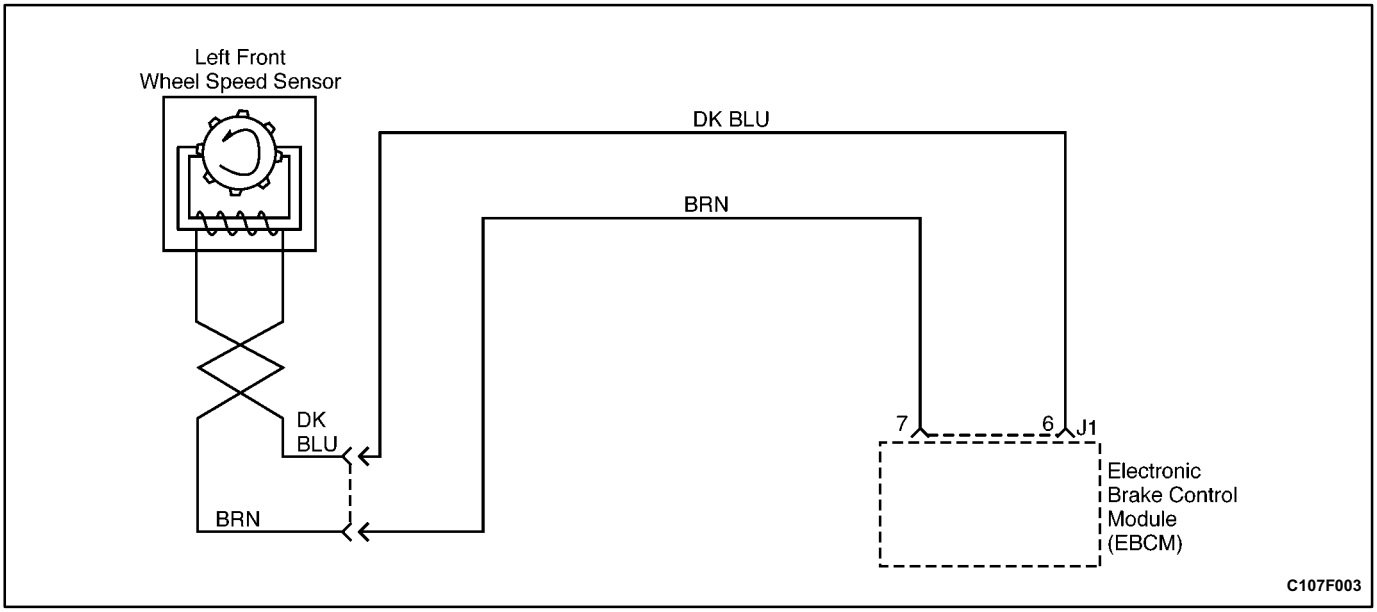

DIAGNOSTIC TROUBLE CODE (DTC) 27
LEFT FRONT WHEEL SPEED SENSOR CONTINUITY FAULT

Circuit Description

The toothed wheel generates a voltage pulse as it moves past the sensor. Each tooth gap tooth series on the wheel generates the pulses. The electronic brake control module (EBCM) uses the frequency of these pulses to determine the wheel speed. The voltage generated depends on the air gap between the sensor and the toothed wheel, and on the wheel speed.

Diagnosis

This procedure checks for a malfunctioning wheel speed sensor, a short to ground or to voltage in the wiring, or a contact problem in a connector.

Cause(s)

- The wheel speed sensor is defective.
- There is a problem in the wiring.
- There is a problem with a connector.

Fail Action

ABS action is disabled, and the ABS warning lamp is ON.

Test Description

The number(s) below refer to step(s) on the diagnostic table.

1. This step begins an examination for a defective wheel speed sensor.
4. This step tests the wiring for a short to voltage.
6. This step tests the wiring for a short to ground.
8. This step tests for an open or a high resistance in the wiring.

Diagnostic Aids

Be sure that the speed sensor wiring is properly routed and retained. This will help to prevent false signals due to the pickup of electrical noise.

It is very important to perform a thorough inspection of the wiring and the connectors. Failure to inspect the wiring and the connectors carefully and completely may result in misdiagnosis, causing part replacement with the reappearance of the malfunction.

DTC 27 - Left Front Wheel Speed Sensor Continuity Fault

Step	Action	Value(s)	Yes	No
1	Examine the wheel speed sensor. Are there any signs of physical damage?	-	Go to *Step 3*	Go to *Step 2*
2	1. Turn the ignition switch to LOCK. 2. Disconnect the left front wheel speed sensor connector. 3. Use a digital voltmeter (DVM) to measure the resistance between the sensor terminals. Is the resistance within the specified value at approximately 25°C (77°F)?	1280-1920 Ω	Go to *Step 4*	Go to *Step 3*
3	Replace the wheel speed sensor. Is the repair complete?	-	System OK	-
4	1. Disconnect the harness from the EBCM. 2. Connect a DVM between ground and one terminal of the wheel speed connector. 3. Turn the ignition to ON. 4. Repeat the above test for the other terminal of the wheel speed connector. Is the voltage for either of these terminals within the specified value?	> 1 V	Go to *Step 5*	Go to *Step 6*
5	Repair the short to voltage in the affected circuit. Is the repair complete?	-	System OK	-
6	1. Turn the ignition switch to LOCK. 2. Measure the resistance to ground from terminal 6 at the harness EBCM connector. 3. Measure the resistance to ground from terminal 7 at the harness EBCM connector. Is the resistance at either circuit less than the specified value?	∞	Go to *Step 7*	Go to *Step 8*
7	Repair the short to ground in the affected circuit. Is the repair complete?	-	System OK	-
8	1. Measure the resistance between terminal 6 at the harness EBCM connector and the harness wheel speed sensor connector terminal connected to the WHT wire. 2. Measure the resistance between terminal 7 at the harness EBCM connector and the harness wheel speed sensor connector terminal connected to the ORN wire. Is the resistance on either circuit within the specified value?	> 5 Ω	Go to *Step 9*	Go to *Step 10*
9	Repair the open or high resistance in the affected circuit as required. Is the repair complete?	-	System OK	-
10	Replace the ABS unit. Is the repair complete?	-	System OK	-

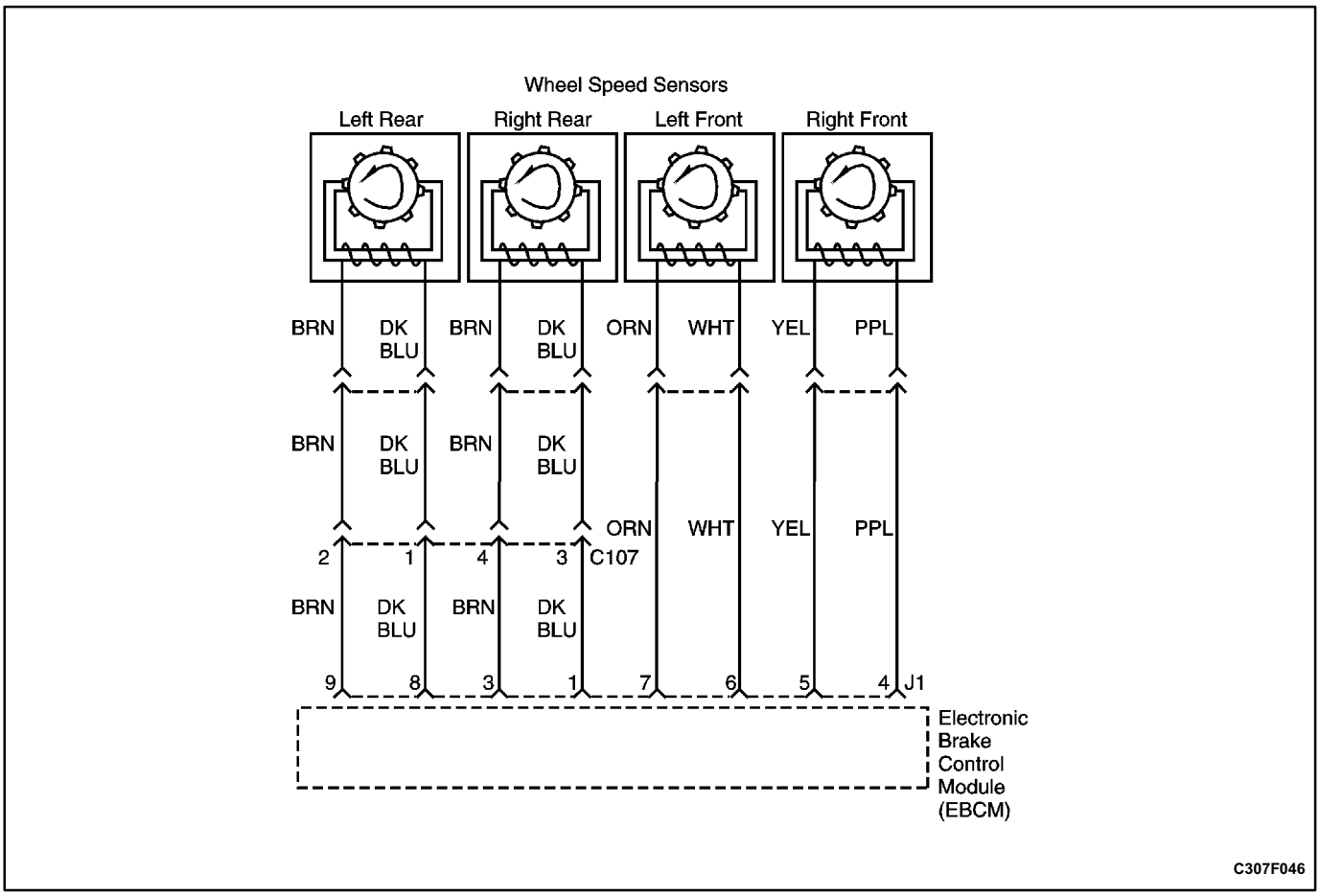

DIAGNOSTIC TROUBLE CODE (DTC) 28 WHEEL SPEED SENSOR FREQUENCY ERROR

Circuit Description

The toothed wheel generates a voltage pulse as it moves past the wheel speed sensor. Each tooth gap tooth series on the wheel generates the pulses. The electronic brake control module (EBCM) uses the frequency of these pulses to determine wheel speed. The voltage generated depends on the air gap between the wheel speed sensor and the toothed wheel, and on the wheel speed.

Diagnosis

This DTC will set when the EBCM cannot identify which wheel speed sensor is causing the malfunction. It is necessary to check all wheel speed sensors and associated wiring to determine the cause of the DTC.

Cause(s)

- Incorrect number of teeth on the toothed wheel.
- Damaged or broken teeth on the toothed wheel.
- Discontinuity or short in speed wheel speed sensor wiring.

Fail Action

Antilock brake system (ABS) action is disabled and the ABS warning lamp is ON.

Test Description

The number(s) below refer to Step(s) on the diagnostic table.

1. This step begins the examination of the front wheel speed sensor sensors.
3. This step checks for a problem with one of the front toothed rings.
5. This step checks the front speed wheel speed sensors.
7. This step checks for shorts in a front wheel speed sensor harness.
9. This step checks for opens in a front wheel speed sensor harness.
11. This step begins a check of the rear wheel speed sensors.
13. This step checks for a problem with one of the rear toothed rings.
15. This step checks the rear wheel speed sensors.
17. This step checks for shorts in a rear wheel speed sensor harness.
19. This step checks for opens in a rear wheel speed sensor harness.

Diagnostic Aids

DTC 28 may be set by running the scan tool auto test if the throttle angle readings are not updating while in the data list mode. If this is the case, clear the DTCs, disconnect the scan tool, and road test the vehicle to at least 25 km/h (15 mph) to see if the DTC resets.

Check the toothed wheels for any large grooves, gouges, marks, etc. that might influence the tooth's signal at the wheel speed sensor. Also check for a buildup of foreign material in the gaps between teeth in the toothed wheel, this material may cause this malfunction.

A badly worn hub/bearing assembly may cause this malfunction. The wheel speed sensor to toothed wheel air gap may change excessively due to bearing play.

If an improper rear hub assembly or front outer constant velocity joint is installed, one with a toothed wheel containing the incorrect number of teeth, this DTC can set. Be sure that all the toothed wheels have 48 teeth.

DTC 28 - Wheel Speed Sensor Frequency Error

Step	Action	Value(s)	Yes	No
1	Visually inspect the wiring for the front wheel speed sensor sensors. Is there any damage?	-	Go to *Step 2*	Go to *Step 3*
2	Repair or replace components as required. Is the repair complete?	-	System OK	-
3	Check that the correct outer constant velocity (CV) joints are installed on the vehicle. They should have speed rings with 48 teeth. Is one of these incorrect?	-	Go to *Step 4*	Go to *Step 5*
4	Replace the incorrect outer CV joint with the proper unit. Is the repair complete?	-	System OK	-
5	1. Disconnect the wheel speed sensor harnesses from the wheel speed sensor connectors. 2. Measure the wheel speed sensor resistance at the wheel speed sensor connector terminals. Does the resistance fall within the specified values for both wheel speed sensors?	1280-1920 Ω	Go to *Step 7*	Go to *Step 6*
6	Replace the faulty wheel speed sensor. Is the repair complete?	-	System OK	-
7	1. Disconnect ABS control module connector J1. 2. Check each wheel speed sensor harness for a short circuit between its wires with a digital ohmmeter attached to the two terminals at the harness side of the wheel speed sensor connector. 3. Also check each wheel speed sensor harness wire for a short to ground from the connector terminals. Is there any short circuit in either wheel speed sensor harness?	-	Go to *Step 8*	Go to *Step 9*
8	Repair the short circuit in the wiring or from a wiring harness to ground. Is the repair complete?	-	System OK	-
9	Check the continuity of the wiring in both front speed wheel speed sensor circuits between the ABS connector J1 and the wheel speed sensor wheel speed sensor connector on each side of the vehicle. ● The left side uses terminals 6 and 7 at the ABS connector J1. ● The right side uses terminals 4 and 5 at the ABS connector J1. Is continuity good for both harnesses?	-	Go to *Step 11*	Go to *Step 10*

DTC 28 - Wheel Speed Sensor Frequency Error (Cont'd)

Step	Action	Value(s)	Yes	No
10	Repair the discontinuity found in the front wheel speed sensor harness. Is the repair complete?	-	System OK	-
11	1. Visually inspect the wiring for the rear wheel speed sensor wheel speed sensors. 2. Check that the wheel speed sensors are properly mounted and that the retaining bolts are properly tightened. Is there any damage?	-	Go to *Step 12*	Go to *Step 13*
12	Repair or replace components as required. Is the repair complete?	-	System OK	-
13	Remove each speed wheel speed sensor from the rear knuckles and inspect the toothed ring through the wheel speed sensor mounting holes. ● Make sure that the toothed ring has 48 teeth. ● Check for any damaged or missing teeth. ● Check that the ring is properly positioned under the wheel speed sensor. Is there any damage or other fault with either speed ring?	-	Go to *Step 14*	Go to *Step 15*
14	Replace the rear wheel hub with the proper unit. Is the repair complete?	-	System OK	-
15	1. Disconnect the rear wheel speed sensor harnesses from the wheel speed sensor connectors. 2. Measure the wheel speed sensor resistance at the wheel speed sensor connector terminals. Does the resistance fall within the specified values for both wheel speed sensors?	1280-1920 Ω	Go to *Step 17*	Go to *Step 16*
16	Replace the faulty wheel speed sensor. Is the repair complete?	-	System OK	-
17	1. The ABS control module connector J1 should still be disconnected. Disconnect it now if it is not. 2. Check each wheel speed sensor harness for a short circuit between its wires with a digital ohmmeter attached to the two terminals at the harness side of the wheel speed sensor connector. 3. Also check each wheel speed sensor harness wire for a short to ground from the connector terminals. Is there any short circuit in either wheel speed sensor harness?	-	Go to *Step 18*	Go to *Step 19*
18	Repair the short circuit in the wiring or from a wire to ground. Is the repair complete?	-	System OK	-

DTC 28 - Wheel Speed Sensor Frequency Error (Cont'd)

Step	Action	Value(s)	Yes	No
19	Check the continuity of the wiring in both rear speed wheel speed sensor circuits between the ABS connector J1 and the wheel speed sensor wheel speed sensor connector on each side of the vehicle. ● The left side uses terminals 8 and 9 at the ABS connector J1. ● The right side uses terminals 1 and 3 at the ABS connector J1. Is continuity good for both harnesses?	-	Go to *Step 21*	Go to *Step 20*
20	Repair the discontinuity found in the rear wheel speed sensor wheel speed sensor harness or connector C107. Is the repair complete?	-	System OK	-
21	Replace the ABS unit. Is the repair complete?	-	System OK	-

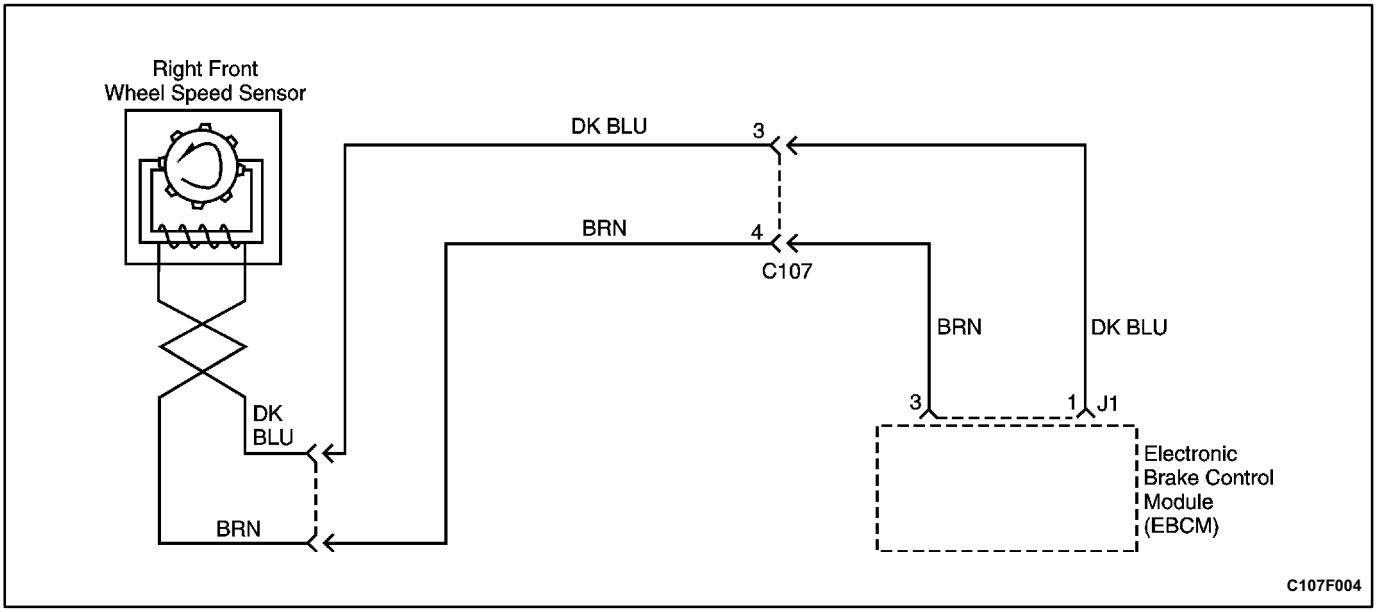

DIAGNOSTIC TROUBLE CODE (DTC) 31
RIGHT REAR WHEEL SPEED SENSOR FAULT

Circuit Description

The toothed wheel generates a voltage pulse as it moves past the sensor. Each tooth gap tooth series on the wheel generates the pulses. The electronic brake control module (EBCM) uses the frequency of these pulses to determine the wheel speed. The voltage generated depends on the air gap between the sensor and the toothed wheel, and on the wheel speed.

Diagnosis

This procedure checks for a malfunctioning wheel speed sensor, a short to ground or to voltage in the wiring, or a contact problem in a connector.

Cause(s)

- The wheel speed sensor is defective.
- There is a problem in the wiring.
- There is a problem with a connector.

Fail Action

ABS action is disabled, and the ABS warning lamp is ON.

Test Description

The number(s) below refer to step(s) on the diagnostic table.

1. This step begins an examination for a defective wheel speed sensor.
6. This step tests the wiring for a short to voltage.
8. This step tests the wiring for a short to ground.
10. This step tests for an open or high resistance in the wiring.

Diagnostic Aids

Be sure that the speed sensor wiring is properly routed and retained. This will help to prevent false signals due to the pickup of electrical noise.

It is very important to perform a thorough inspection of the wiring and the connectors. Failure to inspect the wiring and the connectors carefully and completely may result in misdiagnosis, causing part replacement with the reappearance of the malfunction.

You can use the scan tool to monitor wheel speeds during a road test. Watch the wheel speeds being displayed on the scan tool to see if any of the readings is unusual, such as one sensor varying in speed from the other three, a signal going intermittently high or low, etc. If this does not identify the intermittent, wet the speed sensor harness on the underside of the vehicle and perform a road test, monitoring wheel speeds with the scan tool.

DTC 31 - Right Rear Wheel Speed Sensor Fault

Step	Action	Value(s)	Yes	No
1	Examine the wheel speed sensor. Are there any signs of physical damage?	-	Go to *Step 3*	Go to *Step 2*

DTC 31 - Right Rear Wheel Speed Sensor Fault (Cont'd)

Step	Action	Value(s)	Yes	No
2	1. Turn the ignition switch to LOCK. 2. Disconnect the right rear wheel speed sensor connector. 3. Use a digital voltmeter (DVM) to measure the resistance between the sensor terminals. Is the resistance within the specified value at approximately 25°C (77°F)?	1280-1920 Ω	Go to *Step 4*	Go to *Step 3*
3	Replace the wheel speed sensor. Is the repair complete?	-	System OK	-
4	1. Switch the DVM to the ac millivolt range. 2. Measure the voltage output of between the wheel speed sensor terminals while rotating the wheel about 1 revolution every 2 seconds. Is the output within the specified value?	≈ 120 mV	Go to *Step 6*	Go to *Step 5*
5	Replace the speed sensor or the toothed wheel as required. Is the repair complete?	-	System OK	-
6	1. Disconnect the harness from the EBCM. 2. Connect a DVM between ground and one terminal of the wheel speed connector. 3. Turn the ignition to ON. 4. Repeat the above test for the other terminal of the wheel speed connector. Is the voltage for either of these terminals within the specified value?	> 1 V	Go to *Step 7*	Go to *Step 8*
7	Repair the short to voltage in the affected circuit. Is the repair complete?	-	System OK	-
8	1. Turn the ignition switch to LOCK. 2. Measure the resistance to ground from terminal 1 at the harness EBCM connector. 3. Measure the resistance to ground from terminal 3 at the harness EBCM connector. Is the resistance at either circuit less than the specified value?	∞	Go to *Step 9*	Go to *Step 10*
9	Repair the short to ground in the affected circuit. Is the repair complete?	-	System OK	-
10	1. Measure the resistance between terminal 1 at the harness EBCM connector and the harness wheel speed sensor connector terminal connected to the DK BLU wire. 2. Measure the resistance between terminal 3 at the harness EBCM connector and the harness wheel speed sensor connector terminal connected to the BRN wire. Is the resistance on either circuit within the specified value?	> 5 Ω	Go to *Step 11*	Go to *Step 12*
11	Repair the open or high resistance in the affected circuit as required. Be sure to check terminals 3 and 4 of connector C107. Is the repair complete?	-	System OK	-
12	Replace the ABS unit. Is the repair complete?	-	System OK	-

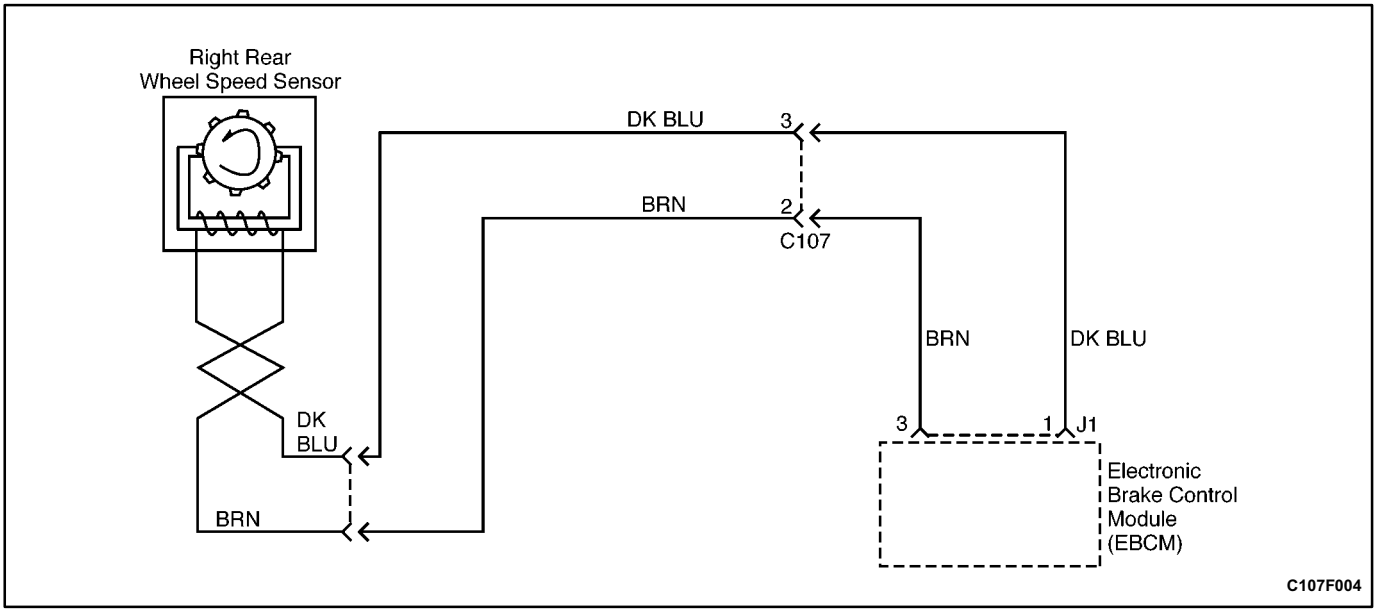

DIAGNOSTIC TROUBLE CODE (DTC) 33
RIGHT REAR WHEEL SPEED SENSOR CONTINUITY FAULT

Circuit Description

The toothed wheel generates a voltage pulse as it moves past the sensor. Each tooth gap tooth series on the wheel generates the pulses. The electronic brake control module (EBCM) uses the frequency of these pulses to determine the wheel speed. The voltage generated depends on the air gap between the sensor and the toothed wheel, and on the wheel speed.

Diagnosis

This procedure checks for a malfunctioning wheel speed sensor, a short to ground or to voltage in the wiring, or a contact problem in a connector.

Cause(s)

- The wheel speed sensor is defective.
- There is a problem in the wiring.
- There is a problem with a connector.

Fail Action

ABS action is disabled, and the ABS warning lamp is ON.

Test Description

The number(s) below refer to step(s) on the diagnostic table.

1. This step begins an examination for a defective wheel speed sensor.
4. This step tests the wiring for a short to voltage.
6. This step tests the wiring for a short to ground.
8. This step tests for an open or a high resistance in the wiring.

Diagnostic Aids

Be sure that the speed sensor wiring is properly routed and retained. This will help to prevent false signals due to the pickup of electrical noise.

It is very important to perform a thorough inspection of the wiring and the connectors. Failure to inspect the wiring and the connectors carefully and completely may result in misdiagnosis, causing part replacement with the reappearance of the malfunction.

DTC 27 - Right Rear Wheel Speed Sensor Continuity Fault

Step	Action	Value(s)	Yes	No
1	Examine the wheel speed sensor. Are there any signs of physical damage?	-	Go to *Step 3*	Go to *Step 2*
2	1. Turn the ignition switch to LOCK. 2. Disconnect the right rear wheel speed sensor connector. 3. Use a digital voltmeter (DVM) to measure the resistance between the sensor terminals. Is the resistance within the specified value at approximately 25°C (77°F)?	1280 1920 Ω	Go to *Step 4*	Go to *Step 3*
3	Replace the wheel speed sensor. Is the repair complete?	-	System OK	-
4	1. Disconnect the harness from the EBCM. 2. Connect a DVM between ground and one terminal of the wheel speed connector. 3. Turn the ignition to ON. 4. Repeat the above test for the other terminal of the wheel speed connector. Is the voltage for either of these terminals within the specified value?	> 1 V	Go to *Step 5*	Go to *Step 6*
5	Repair the short to voltage in the affected circuit. Is the repair complete?	-	System OK	-
6	1. Turn the ignition switch to LOCK. 2. Measure the resistance to ground from terminal 1 at the harness EBCM connector. 3. Measure the resistance to ground from terminal 3 at the harness EBCM connector. Is the resistance at either circuit less than the specified value?	∞	Go to *Step 7*	Go to S*tep 8*
7	Repair the short to ground in the affected circuit. Is the repair complete?	-	System OK	-
8	1. Measure the resistance between terminal 1 at the harness EBCM connector and the harness wheel speed sensor connector terminal connected to the DK BLU wire. 2. Measure the resistance between terminal 3 at the harness EBCM connector and the harness wheel speed sensor connector terminal connected to the BRN wire. Is the resistance on either circuit within the specified value?	> 5 Ω	Go to *Step 9*	Go to *Step 10*
9	Repair the open or high resistance in the affected circuit as required. Be sure to check terminals 3 and 4 of connector C107. Is the repair complete?	-	System OK	-
10	Replace the ABS unit. Is the repair complete?	-	System OK	-

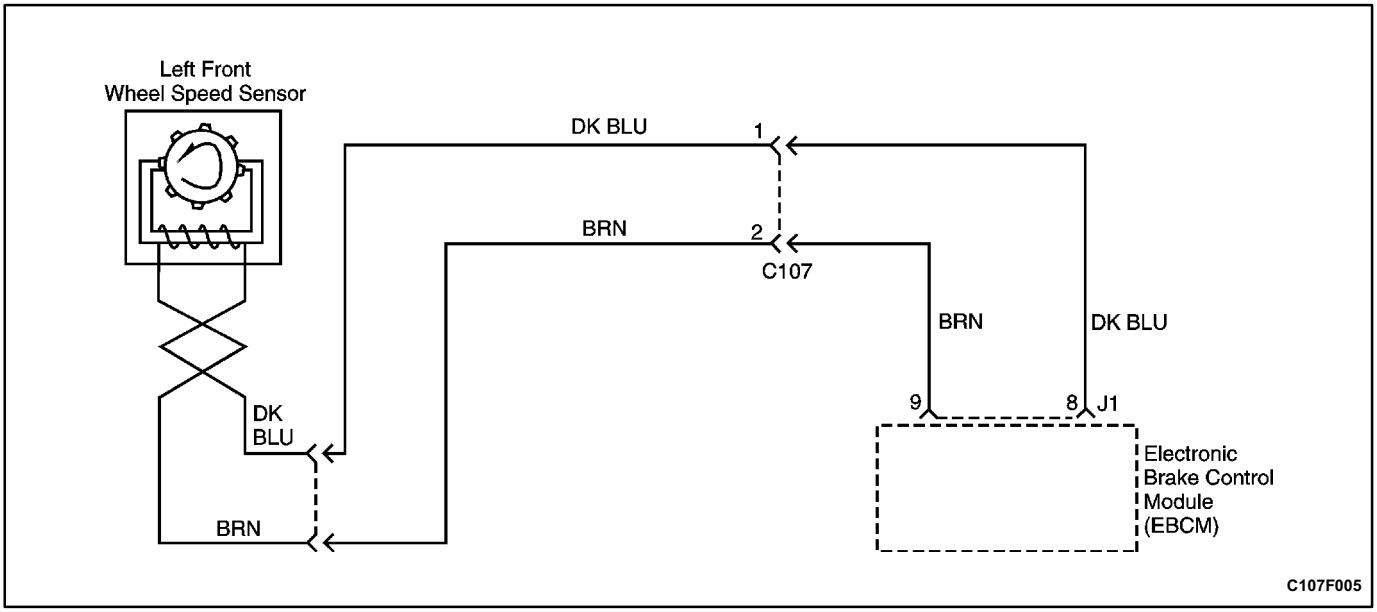

DIAGNOSTIC TROUBLE CODE (DTC) 35
LEFT REAR WHEEL SPEED SENSOR FAULT

Circuit Description

The toothed wheel generates a voltage pulse as it moves past the sensor. Each tooth gap tooth series on the wheel generates the pulses. The electronic brake control module (EBCM) uses the frequency of these pulses to determine the wheel speed. The voltage generated depends on the air gap between the sensor and the toothed wheel, and on the wheel speed.

Diagnosis

This procedure checks for a malfunctioning wheel speed sensor, a short to ground or to voltage in the wiring, or a contact problem in a connector.

Cause(s)

- The wheel speed sensor is defective.
- There is a problem in the wiring.
- There is a problem with a connector.

Fail Action

ABS action is disabled, and the ABS warning lamp is ON.

Test Description

The number(s) below refer to step(s) on the diagnostic table.

1. This step begins an examination for a defective wheel speed sensor.
6. This step tests the wiring for a short to voltage.
8. This step tests the wiring for a short to ground.
10. This step tests for an open or a high resistance in the wiring.

Diagnostic Aids

Be sure that the speed sensor wiring is properly routed and retained. This will help to prevent false signals due to the pickup of electrical noise.

It is very important to perform a thorough inspection of the wiring and the connectors. Failure to inspect the wiring and the connectors carefully and completely may result in misdiagnosis, causing part replacement with the reappearance of the malfunction.

You can use the scan tool to monitor wheel speeds during a road test. Watch the wheel speeds being displayed on the scan tool to see if any of the readings is unusual, such as one sensor varying in speed from the other three, a signal going intermittently high or low, etc. If this does not identify the intermittent, wet the speed sensor harness on the underside of the vehicle and perform a road test, monitoring wheel speeds with the scan tool.

DTC 35 - Left Rear Wheel Speed Sensor Fault

Step	Action	Value(s)	Yes	No
1	Examine the wheel speed sensor. Are there any signs of physical damage?	-	Go to *Step 3*	Go to *Step 2*

DTC 35 - Left Rear Wheel Speed Sensor Fault (Cont'd)

Step	Action	Value(s)	Yes	No
2	1. Turn the ignition switch to LOCK. 2. Disconnect the left rear wheel speed sensor connector. 3. Use a digital voltmeter (DVM) to measure resistance between the sensor terminals. Is the resistance within the specified value at approximately 25°C (77°F)?	1280-1920 Ω	Go to *Step 4*	Go to *Step 3*
3	Replace the wheel speed sensor. Is the repair complete?	-	System OK	-
4	1. Switch the DVM to the ac millivolt range. 2. Measure the voltage output of between the wheel speed sensor terminals while rotating the wheel about 1 revolution every 2 seconds. Is the output within the specified value?	≈ 120 mV	Go to *Step 6*	Go to *Step 5*
5	Replace the speed sensor or the toothed wheel as required. Is the repair complete?	-	System OK	-
6	1. Disconnect the harness from the EBCM. 2. Connect a DVM between ground and one terminal of the wheel speed connector. 3. Turn the ignition to ON. 4. Repeat the above test for the other terminal of the wheel speed connector. Is the voltage for either of these terminals within the specified value?	> 1 V	Go to *Step 7*	Go to *Step 8*
7	Repair the short to voltage in the affected circuit. Is the repair complete?	-	System OK	-
8	1. Turn the ignition switch to LOCK. 2. Measure the resistance to ground from terminal 8 at the harness EBCM connector. 3. Measure the resistance to ground from terminal 9 at the harness EBCM connector. Is the resistance at either circuit less than the specified value?	∞	Go to *Step 9*	Go to *Step 10*
9	Repair the short to ground in the affected circuit. Is the repair complete?	-	System OK	-
10	1. Measure the resistance between terminal 8 at the harness EBCM connector and the harness wheel speed sensor connector terminal connected to the DK BLU wire. 2. Measure the resistance between terminal 9 at the harness EBCM connector and the harness wheel speed sensor connector terminal connected to the BRN wire. Is the resistance on either circuit within the specified value?	> 5 Ω	Go to *Step 11*	Go to *Step 12*
11	Repair the open or the high resistance in the affected circuit as required. Be sure to check terminals 1 and 2 of connector C107. Is the repair complete?	-	System OK	-
12	Replace the ABS unit. Is the repair complete?	-	System OK	-

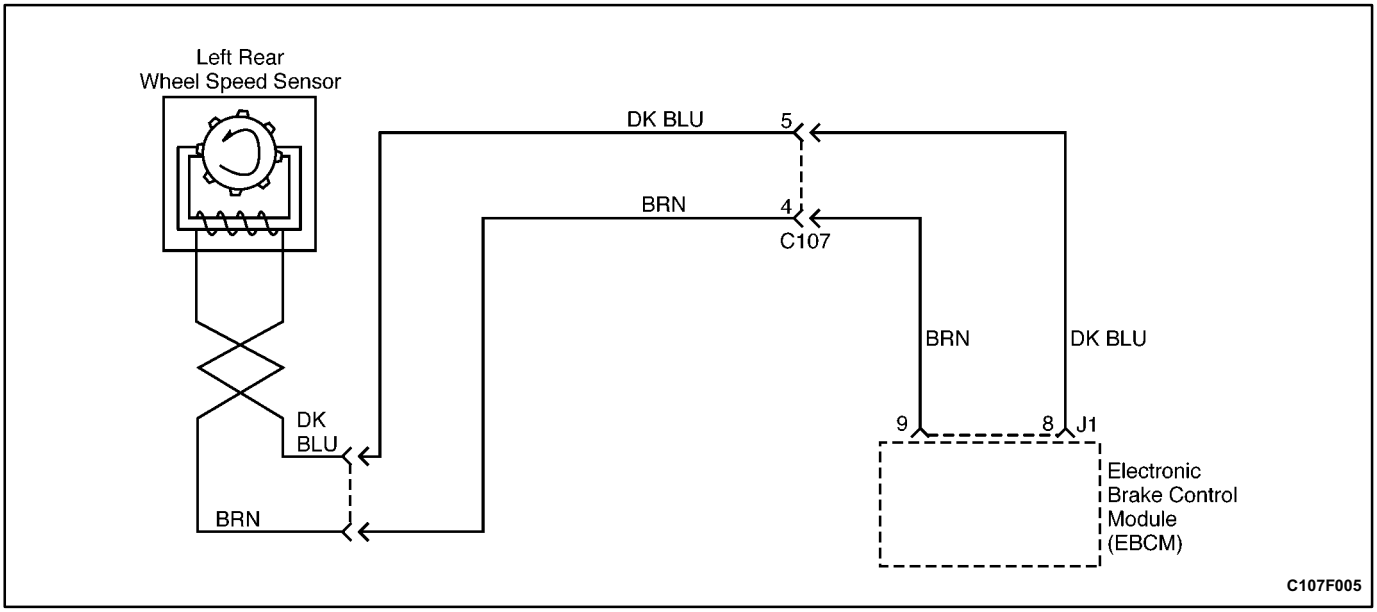

DIAGNOSTIC TROUBLE CODE (DTC) 37
LEFT REAR WHEEL SPEED SENSOR CONTINUITY FAULT

Circuit Description

The toothed wheel generates a voltage pulse as it moves past the sensor. Each tooth gap tooth series on the wheel generates the pulses. The electronic brake control module (EBCM) uses the frequency of these pulses to determine the wheel speed. The voltage generated depends on the air gap between the sensor and the toothed wheel, and on the wheel speed.

Diagnosis

This procedure checks for a malfunctioning wheel speed sensor, a short to ground or to voltage in the wiring, or a contact problem in a connector.

Cause(s)

- The wheel speed sensor is defective.
- There is a problem in the wiring.
- There is a problem with a connector.

Fail Action

ABS action is disabled, and the ABS warning lamp is ON.

Test Description

The number(s) below refer to step(s) on the diagnostic table.

1. This step begins an examination for a defective wheel speed sensor.
4. This step tests the wiring for a short to voltage.
6. This step tests the wiring for a short to ground.
8. This step tests for an open or high resistance in the wiring.

Diagnostic Aids

Be sure that the speed sensor wiring is properly routed and retained. This will help to prevent false signals due to the pickup of electrical noise.

It is very important to perform a thorough inspection of the wiring and the connectors. Failure to inspect the wiring and the connectors carefully and completely may result in misdiagnosis, causing part replacement with the reappearance of the malfunction.

DTC 37 - Left Rear Wheel Speed Sensor Continuity Fault

Step	Action	Value(s)	Yes	No
1	Examine the wheel speed sensor. Are there any signs of physical damage?	-	Go to *Step 3*	Go to *Step 2*
2	1. Turn the ignition switch to LOCK. 2. Disconnect the left rear wheel speed sensor connector. 3. Use a digital voltmeter (DVM) to measure resistance between the sensor terminals. Is the resistance within the specified value at approximately 25°C (77°F)?	1280-1920 Ω	Go to *Step 4*	Go to *Step 3*
3	Replace the wheel speed sensor. Is the repair complete?	-	System OK	-
4	1. Disconnect the harness from the EBCM. 2. Connect a DVM between ground and one terminal of the wheel speed connector. 3. Turn the ignition to ON. 4. Repeat the above test for the other terminal of the wheel speed connector. Is the voltage for either of these terminals within the specified value?	> 1 V	Go to *Step 5*	Go to *Step 6*
5	Repair the short to voltage in the affected circuit. Is the repair complete?	-	System OK	-
6	1. Turn the ignition switch to LOCK. 2. Measure the resistance to ground from terminal 8 at the harness EBCM connector. 3. Measure the resistance to ground from terminal 9 at the harness EBCM connector. Is the resistance at either circuit less than the specified value?	∞	Go to *Step 7*	Go to *Step 8*
7	Repair the short to ground in the affected circuit. Is the repair complete?	-	System OK	-
8	1. Measure the resistance between terminal 8 at the harness EBCM connector and the harness wheel speed sensor connector terminal connected to the DK BLU wire. 2. Measure the resistance between terminal 9 at the harness EBCM connector and the harness wheel speed sensor connector terminal connected to the BRN wire. Is the resistance on either circuit within the specified value?	> 5 Ω	Go to *Step 9*	Go to *Step 10*
9	Repair the open or high resistance in the affected circuit as required. Be sure to check terminals 1 and 2 of connector C107. Is the repair complete?	-	System OK	-
10	Replace the ABS unit. Is the repair complete?	-	System OK	-

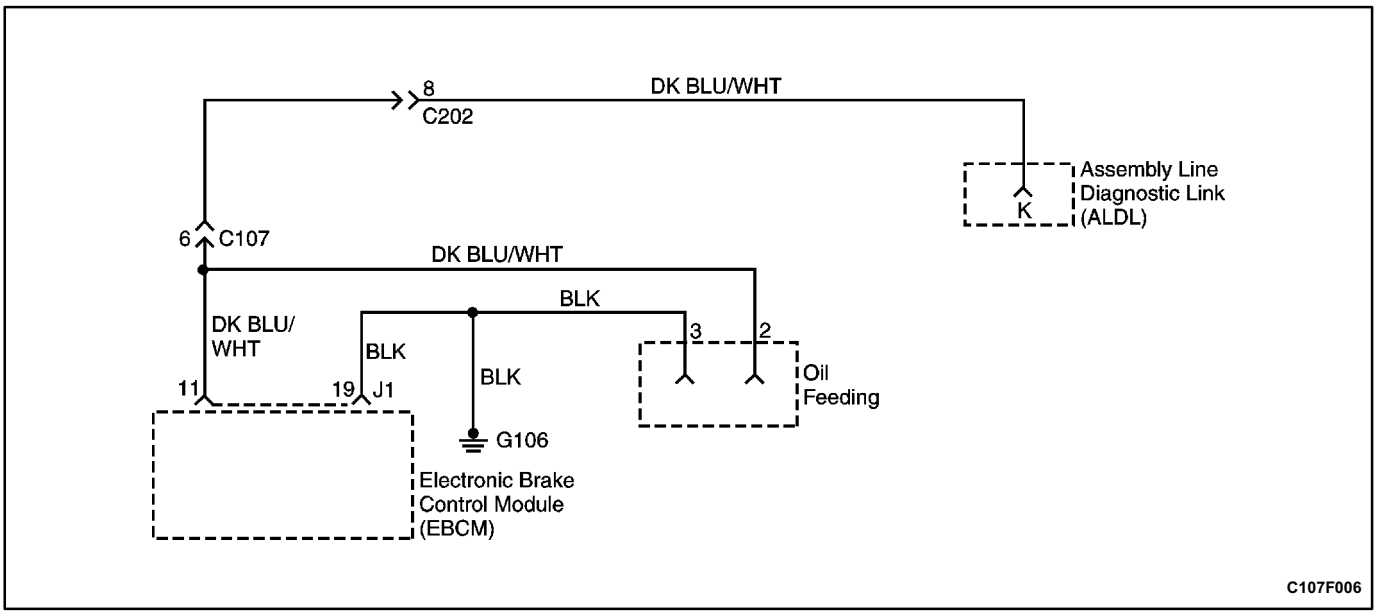

DIAGNOSTIC TROUBLE CODE (DTC) 41/42
RIGHT FRONT INLET AND OUTLET VALVE SOLENOID FAULT

Circuit Description

The solenoid valve coil circuits are supplied with power from the battery when the valve relay is energized. Switched ground is provided by the electronic brake control module (EBCM) to each coil.

Diagnosis

This procedure checks whether the right front inlet and outlet valves are functioning.

Cause(s)

- A solenoid coil is open or shorted.

Fail Action

ABS is disabled, and the ABS warning lamp is turned ON for the remainder of the ignition cycle. If the failure is intermittent, the EBCM will enable the system at the next ignition cycle and set a history DTC.

Test Description

The number(s) below refer to step(s) on the diagnostic table.

1. This begins the test of the inlet valve.
3. This tests the outlet valve.

DTC 41/42 - Right Front Inlet and Outlet Valve Solenoid Fault

Step	Action	Value(s)	Yes	No
1	1. Raise and suitably support the vehicle at the corner being tested. 2. Turn the ignition switch to ON. 3. Install the scan tool to the assembly line diagnostic link (ALDL) and select „Wheel front right" to begin the solenoid tests at that wheel. This will test both the inlet and the outlet valves. 4. When the scan tool indicates „Pressure hold," depress and hold the brake pedal until the end of the test. 5. Have an assistant attempt to rotate the wheel. Can the wheel be rotated?	-	Go to *Step 2*	Go to *Step 6*
2	1. Maintain pressure on the brake pedal. 2. When the scan tool indicates „Pressure increase," have an assistant attempt to rotate the wheel again. Can the wheel be rotated now?	-	Go to *Step 6*	Go to *Step 3*
3	1. Maintain pressure on the brake pedal. 2. When the scan tool indicates „Pressure release on," have an assistant attempt to rotate the wheel again. Can the wheel be rotated?	-	Go to *Step 4*	Go to *Step 6*
4	1. Release brake pedal pressure when the scan tool indicates „Pressure release off." 2. Clear all DTCs. 3. Road test the vehicle. Does the DTC set again?	-	Go to *Step 6*	Go to *Step 5*
5	1. Check the wiring harness and the connector terminals for an intermittent problem. 2. Repair any problem found. Is the repair complete?	-	System OK	-
6	Replace the ABS unit. Is the repair complete?	-	System OK	-

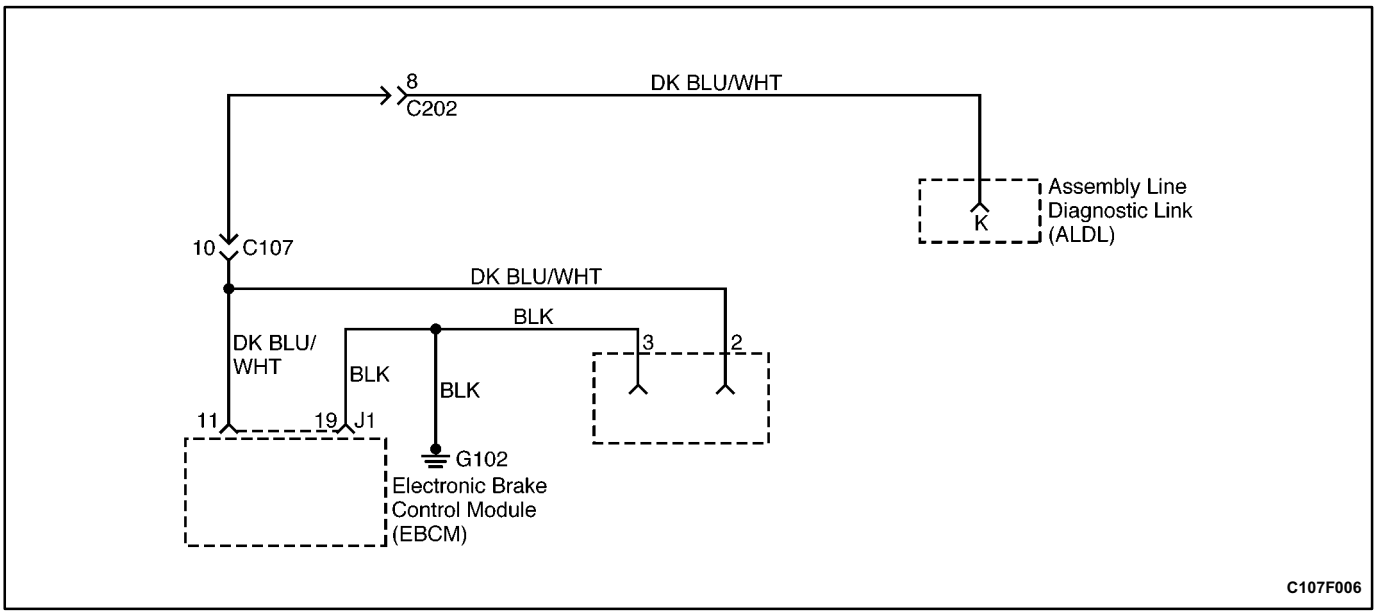

DIAGNOSTIC TROUBLE CODE (DTC) 43/44 RIGHT FRONT PRIME LINE AND TRACTION CONTROL SYSTEM (TCS) PILOT VALVE FAULT

Circuit Description

The solenoid valve coil circuits are supplied with power from the battery when the valve relay is energized. Switched ground is provided by the electronic brake control module (EBCM) to each coil.

Diagnosis

This procedure checks whether the right front TCS valves are functioning.

Cause(s)

- A solenoid coil is open or shorted.

Fail Action

Antilock brake system (ABS) is disabled, and the ABS warning lamp is turned ON for the remainder of the ignition cycle. If the failure is intermittent, the EBCM will enable the system at the next ignition cycle and set a history DTC.

DTC 43/ 44 - Right Front Prime Line and TCS Pilot Valve Fault

Step	Action	Value(s)	Yes	No
1	1. Raise and suitably support the vehicle at the corner being tested. 2. Turn the ignition switch to ON. **Important:** Do not step on the brake pedal at any time during this test. 3. Install the scan tool to the assembly line diagnostic link (ALDL). 4. Select the ABD function and „Wheel front right" to begin the solenoid tests at that wheel. This will test both the prime and pilot valves. 5. When the scan tool indicates a pressure increase, attempt to rotate the wheel. Can the wheel be rotated?	-	Go to *Step 6*	Go to *Step 2*
2	When the scan tool indicates, that the prime valve was switched OFF, attempt to rotate the wheel again. Can the wheel be rotated now?	-	Go to *Step 6*	Go to *Step 3*
3	When the scan tool indicates that the pilot valve and the pump motor were switched OFF, attempt to rotate the wheel again. Can the wheel be rotated?	-	Go to *Step 4*	Go to *Step 6*

DTC 43/ 44 - Right Front Prime Line and TCS Pilot Valve Fault (Cont'd)

Step	Action	Value(s)	Yes	No
4	1. Clear all the DTCs. 2. Road test the vehicle. Does the DTC set again?	-	Go to *Step 6*	Go to *Step 5*
5	1. Check the wiring harness and connector terminals for an intermittent problem. 2. Repair any problem found. Is the repair complete?	-	System OK	-
6	Replace the ABS unit. Is the repair complete?	-	System OK	-

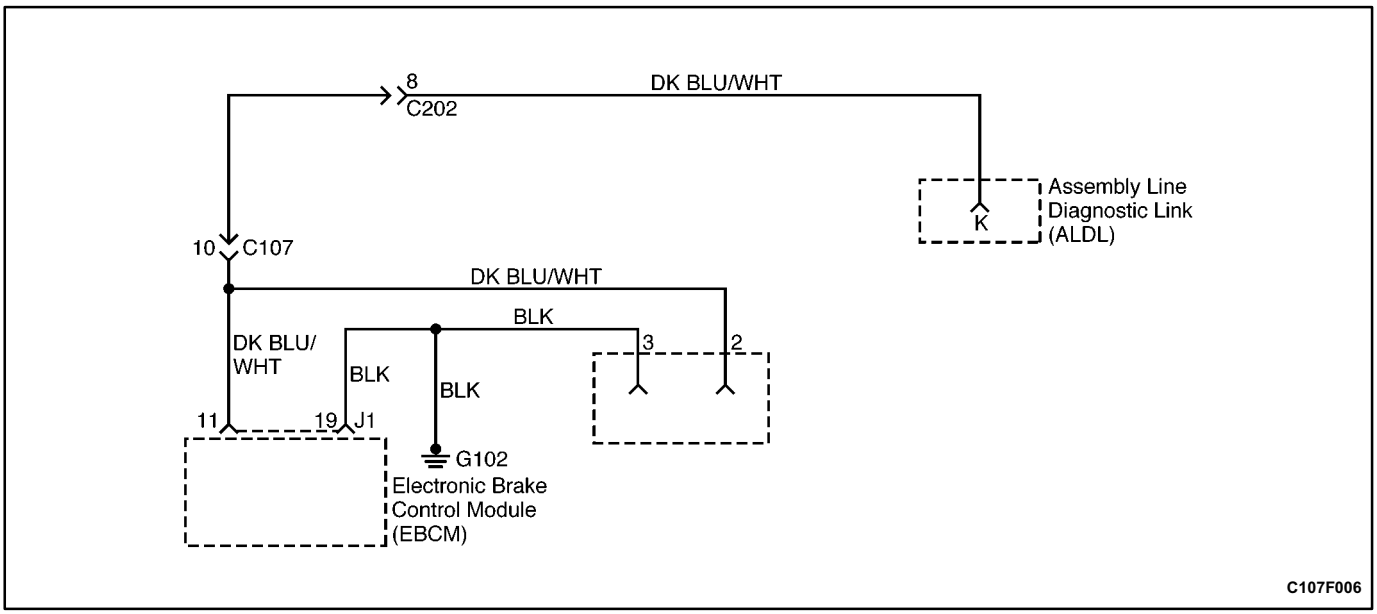

DIAGNOSTIC TROUBLE CODE (DTC) 45/46
LEFT FRONT INLET AND OUTLET VALVE SOLENOID FAULT

Circuit Description

The solenoid valve coil circuits are supplied with power from the battery when the valve relay is energized. Switched ground is provided by the electronic brake control module (EBCM) to each coil.

Diagnosis

This procedure checks whether the left front inlet and outlet valves are functioning.

Cause(s)

- A valve has failed.
- A solenoid coil is open or shorted.

Fail Action

ABS is disabled, and the ABS warning lamp is turned ON for the remainder of the ignition cycle. If the failure is intermittent, the EBCM will enable the system at the next ignition cycle and set a history DTC.

Test Description

The number(s) below refer to step(s) on the diagnostic table.

1. This step begins the test of the inlet valve.
3. This step tests the outlet valve.

DTC 45/46- Left Front Inlet and Outlet Valve Solenoid Fault

Step	Action	Value(s)	Yes	No
1	1. Raise and suitably support the vehicle at the corner being tested. 2. Turn the ignition switch to ON. 3. Install the scan tool to the assembly line diagnostic link (ALDL) and select „Wheel front left" to begin the solenoid tests at that wheel. This will test both the inlet and the outlet valves. 4. When the scan tool indicates „Pressure hold," depress and hold the brake pedal until the end of the test. 5. Have an assistant attempt to rotate the wheel. Can the wheel be rotated?	-	Go to *Step 2*	Go to *Step 6*
2	1. Maintain pressure on the brake pedal. 2. When the scan tool indicates „Pressure increase," have an assistant attempt to rotate the wheel again. Can the wheel be rotated now?	-	Go to *Step 6*	Go to *Step 3*
3	1. Maintain pressure on the brake pedal. 2. When the scan tool indicates „Pressure release on," have an assistant attempt to rotate the wheel again. Can the wheel be rotated?	-	Go to *Step 4*	Go to *Step 6*
4	1. Release brake pedal pressure when the scan tool indicates „Pressure release off." 2. Clear all DTCs. 3. Road test the vehicle. Does the DTC set again?	-	Go to *Step 6*	Go to *Step 5*
5	1. Check the wiring harness and connector terminals for an intermittent problem. 2. Repair any problem found. Is the repair complete?	-	System OK	-
6	Replace the ABS unit. Is the repair complete?	-	System OK	-

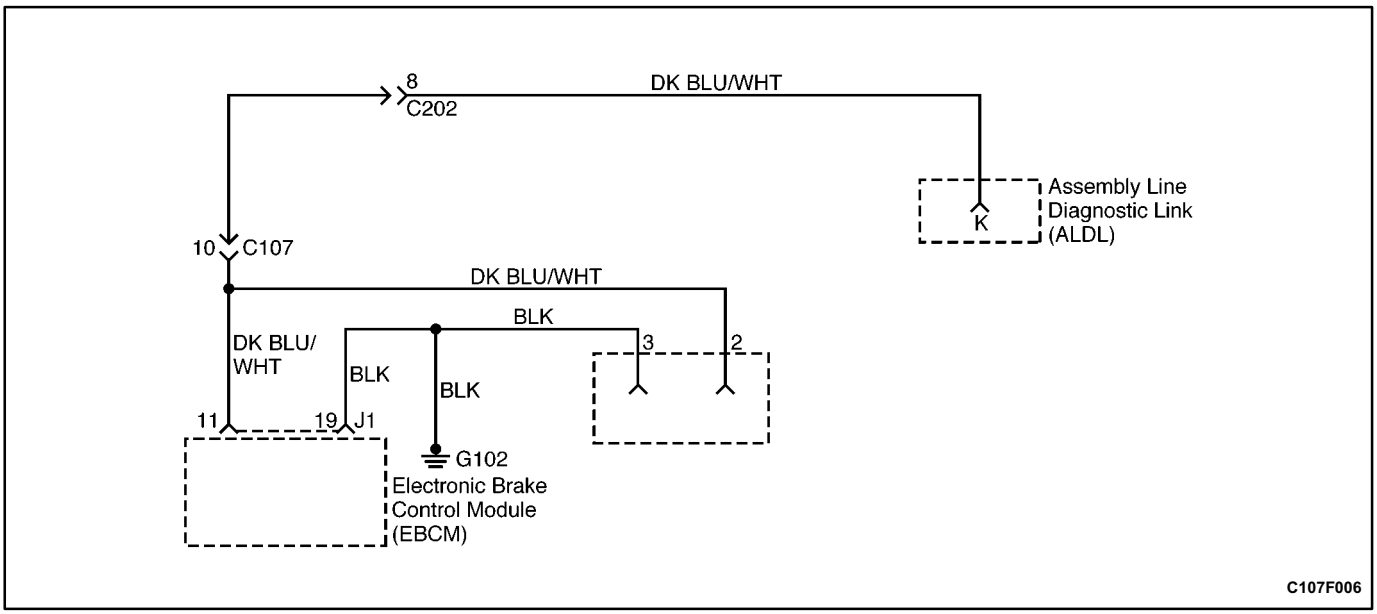

DIAGNOSTIC TROUBLE CODE (DTC) 47/48 LEFT FRONT PRIME LINE AND TRACTION CONTROL SYSTEM (TCS) PILOT VALVE FAULT

Circuit Description

The solenoid valve coil circuits are supplied with power from the battery when the valve relay is energized. Switched ground is provided by the electronic brake control module (EBCM) to each coil.

Diagnosis

This procedure checks whether the left front TCS valves are functioning.

Cause(s)

- A solenoid coil is open or shorted.

Fail Action

Antilock brake system (ABS) is disabled, and the ABS warning lamp is turned ON for the remainder of the ignition cycle. If the failure is intermittent, the EBCM will enable the system at the next ignition cycle and set a history DTC.

DTC 47/48 - Left Front Prime Line and TCS Pilot Valve Fault

Step	Action	Value(s)	Yes	No
1	1. Raise and suitably support the vehicle at the corner being tested. 2. Turn the ignition switch to ON. **Important:** Do not step on the brake pedal at any time during this test. 3. Install the scan tool to the assembly line diagnostic link (ALDL). 4. Select the TCS function and wheel front left to begin the solenoid tests at that wheel. This will test both the prime and pilot valves. 5. When the scan tool indicates a pressure increase, attempt to rotate the wheel. Can the wheel be rotated?	-	Go to *Step 6*	Go to *Step 2*
2	When the scan tool indicates that the prime valve was switched OFF, attempt to rotate the wheel again. Can the wheel be rotated now?	-	Go to *Step 6*	Go to *Step 3*
3	When the scan tool indicates that the pilot valve and the pump motor were switched OFF, attempt to rotate the wheel again. Can the wheel be rotated?	-	Go to *Step 4*	Go to *Step 6*

DTC 47/48 - Left Front Prime Line and TCS Pilot Valve Fault (Cont'd)

Step	Action	Value(s)	Yes	No
4	1. Clear all the DTCs. 2. Road test the vehicle. Does the DTC set again?	-	Go to *Step 6*	Go to *Step 5*
5	1. Check the wiring harness and connector terminals for an intermittent problem. 2. Repair any problem found. Is the repair complete?	-	System OK	-
6	Replace the ABS unit. Is the repair complete?	-	System OK	-

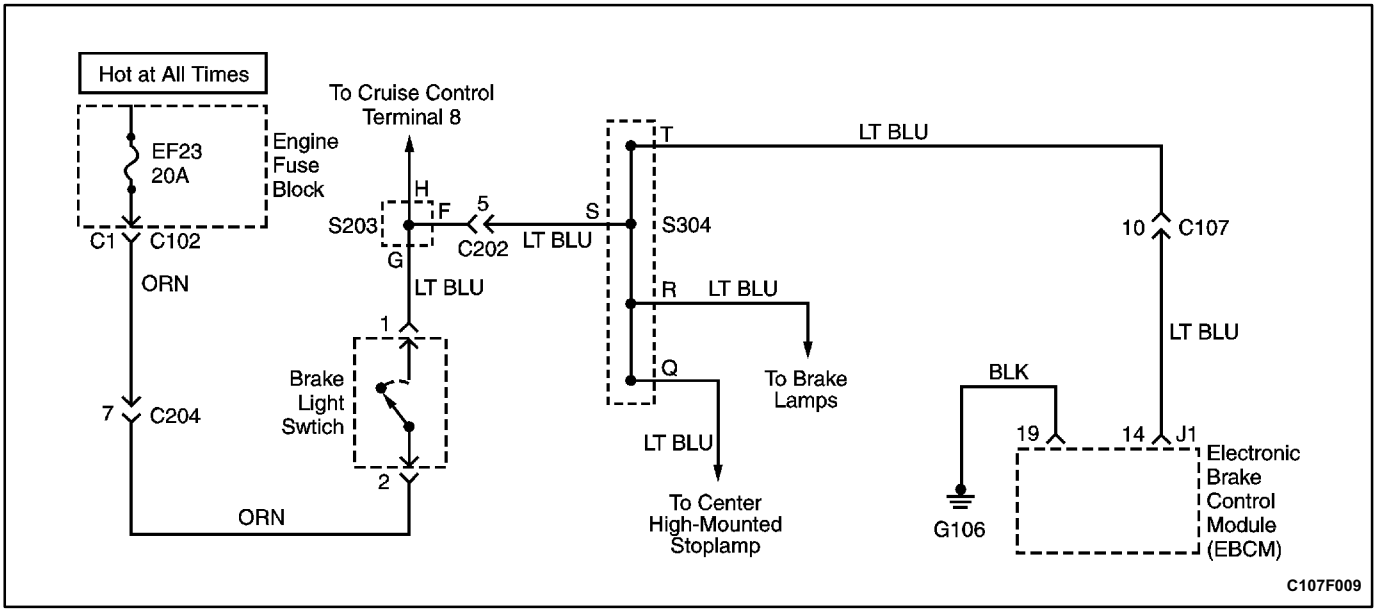

DIAGNOSTIC TROUBLE CODE (DTC) 50
BRAKE LIGHT SWITCH (BLS) FAULT

Circuit Description

When the brake pedal is depressed, the contacts on the brake light switch close to illuminate the brake lights. Battery voltage is also applied to terminal 14 of the electronic brake control module (EBCM), which signals the ABS controller that the brakes are applied and ABS may be needed. Without this, signals from a wheel speed sensor that may indicate need for ABS intervention are questionable. When the brake pedal is not depressed, the EBCM terminal 14 is grounded through the brake lights.

Diagnosis

This procedure will check whether there is no output or constant output from the brake light switch and will determine the cause as a faulty switch or a problem in the circuitry.

Cause(s)

- The ground connection or the positive connection at the EBCM has failed.
- There is an open, short to ground, or short to positive in the vehicle wiring.
- The brake light switch has failed.

Fail Action

The system records a DTC 50. ABS operation is not disabled.

Test Description

The number(s) below refer to step(s) on the diagnostic table.

1. This simple test will isolate the problem to the fuse brake light switch splice 304 area or the splice 304 EBCM area.
3. This is the first step in identifying an open, a short to ground, a short to voltage, or a faulty brake light switch.
11. This step begins the process of finding an open, a defective connector, or a faulty EBCM.

Diagnostic Aids

Inspect wiring and connectors carefully and thoroughly. Failure to do so could result in misdiagnosis, causing part replacement with reappearance of the malfunction.

DTC 50 - Brake Light Switch (BLS) Fault

Step	Action	Value(s)	Yes	No
1	Step on the brake pedal. Do the brake lights come on at all?	-	Go to *Step 2*	Go to *Step 3*
2	Remove your foot from the brake pedal. Do the lights stay on continuously?	-	Go to *Step 8*	Go to *Step 11*

DTC 50 - Brake Light Switch (BLS) Fault (Cont'd)

Step	Action	Value(s)	Yes	No
3	Check fuse EF23 in the engine compartment fuse block. Is fuse EF23 blown?	-	Go to *Step 4*	Go to *Step 6*
4	1. Replace fuse EF23. 2. Check the new fuse. Does the new fuse blow?	-	Go to *Step 5*	Go to *Step 7*
5	1. Repair the short to ground in the brake light circuitry. 2. Install a new fuse EF23. Is the repair complete?	-	System OK	-
6	Repair the open in the brake light switch circuit ORN from terminal C1 of connector C102 at the engine fuse block to the brake light switch, circuit LT BLU from the brake light switch through splice S203 and terminal 5 of connector C202 to splice S304, or a defective brake light switch. Is the repair complete?	-	System OK	-
7	Check for functioning of the brake lights and the ABS system. Is the repair complete?	-	System OK	-
8	Check the brake light switch on the brake pedal. Is the switch faulty?	-	Go to *Step 9*	Go to *Step 10*
9	Repair the brake light switch. Is the repair complete?	-	System OK	-
10	Repair the short to positive in the circuit LT BLU between the brake light switch, splice S304, the brake lights, the center highmounted stoplamp, and the ABS wiring harness connector at the EBCM terminal 14. Is the repair complete?	-	System OK	-
11	1. Disconnect the EBCM connector. 2. Use a digital voltmeter (DVM) to measure voltage between pins 14 and 19 of the ABS harness connector at the EBCM. 3. Have an assistant step on the brake pedal. Does the DVM indicate the specified value?	11-14 V	Go to *Step 13*	Go to *Step 12*
12	1. Examine the connection between the ABS harness connector and the EBCM connector terminals 14 and 19. 2. Examine the connection at terminal 10 of connector C107. 3. Examine the wiring of circuit LT BLU between splice S304 and terminal 14 of the ABS EBCM connector for an open condition. 4. Examine the wiring between ground G106 and terminal 19 of the ABS EBCM connector. 5. Repair the broken wire or the defective connector terminal, or replace the connector, the wiring harness as required. Is the repair complete?	-	System OK	-

DTC 50 - Brake Light Switch (BLS) Fault (Cont'd)

Step	Action	Value(s)	Yes	No
13	Check the interface between the ABS EBCM connector and the EBCM. Is there a poor connection at terminal 14 or 19?	-	Go to *Step 14*	Go to *Step 15*
14	Repair the connector or replace the wiring harness or the ABS unit as required. Is the repair complete?	-	System OK	-
15	Replace the ABS unit. Is the repair complete?	-	System OK	-

BLANK

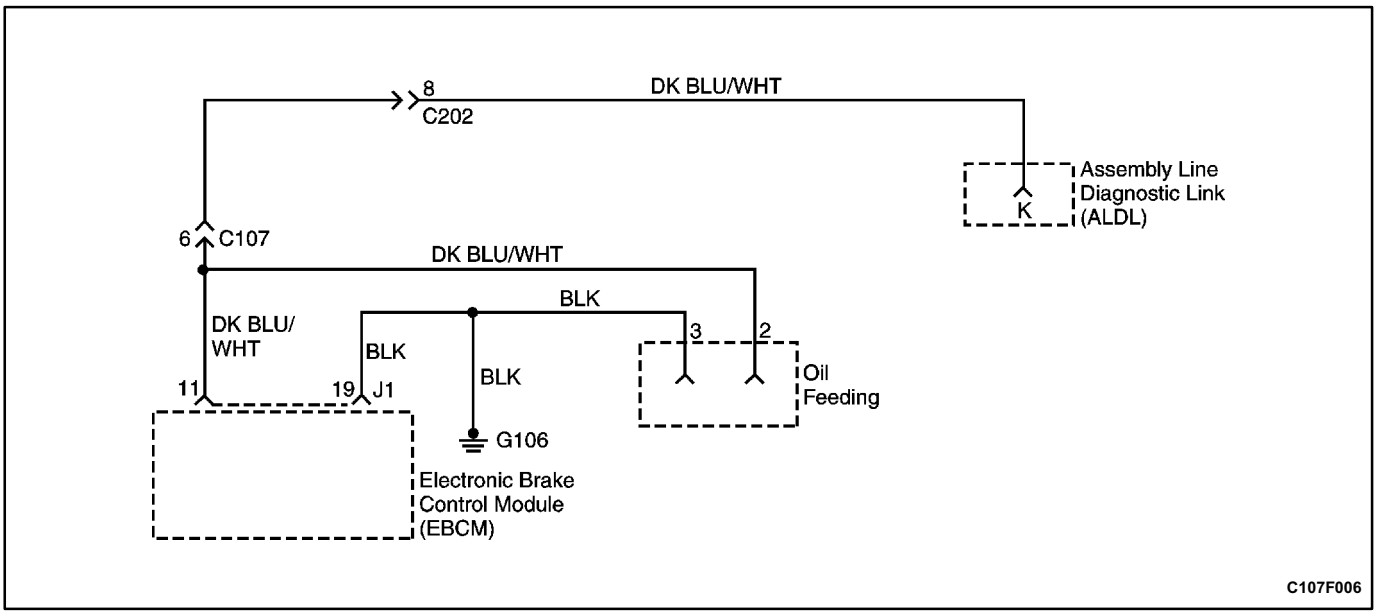

DIAGNOSTIC TROUBLE CODE (DTC) 51/52
RIGHT REAR INLET AND OUTLET VALVE SOLENOID FAULT

Circuit Description

The solenoid valve coil circuits are supplied with power from the battery when the valve relay is energized. Switched ground is provided by the electronic brake control module (EBCM) to each coil.

Diagnosis

This procedure checks whether the right rear inlet and outlet valves are functioning.

Cause(s)

- A valve has failed.
- A solenoid coil is open or shorted.

Fail Action

ABS is disabled, and the ABS warning lamp is turned ON for the remainder of the ignition cycle. If the failure is intermittent, the EBCM will enable the system at the next ignition cycle and set a history DTC.

Test Description

The number(s) below refer to step(s) on the diagnostic table.

1. This begins the test of the inlet valve.
3. This tests the outlet valve.

DTC 51/52 - Right Rear Inlet and Outlet Valve Solenoid Fault

Step	Action	Value(s)	Yes	No
1	1. Raise and suitably support the vehicle at the corner being tested. 2. Turn the ignition switch to ON. 3. Install the scan tool to the assembly line diagnostic link (ALDL) and select „Wheel rear right" to begin the solenoid tests at that wheel. This will test both the inlet and the outlet valves. 4. When the scan tool indicates „Pressure hold," depress and hold the brake pedal until the end of the test. 5. Have an assistant attempt to rotate the wheel. Can the wheel be rotated?	-	Go to *Step 2*	Go to *Step 6*
2	1. Maintain pressure on the brake pedal. 2. When the scan tool indicates „Pressure increase," have an assistant attempt to rotate the wheel again. Can the wheel be rotated now?	-	Go to *Step 6*	Go to *Step 3*
3	1. Maintain pressure on the brake pedal. 2. When the scan tool indicates „Pressure release on," have an assistant attempt to rotate the wheel again. Can the wheel be rotated?	-	Go to *Step 4*	Go to *Step 6*
4	1. Release brake pedal pressure when the scan tool indicates „Pressure release off." 2. Clear all DTCs. 3. Road test the vehicle. Does the DTC set again?	-	Go to *Step 6*	Go to *Step 5*
5	1. Check the wiring harness and the connector terminals for an intermittent problem. 2. Repair any problem found. Is the repair complete?	-	System OK	-
6	Replace the ABS unit. Is the repair complete?	-	System OK	-

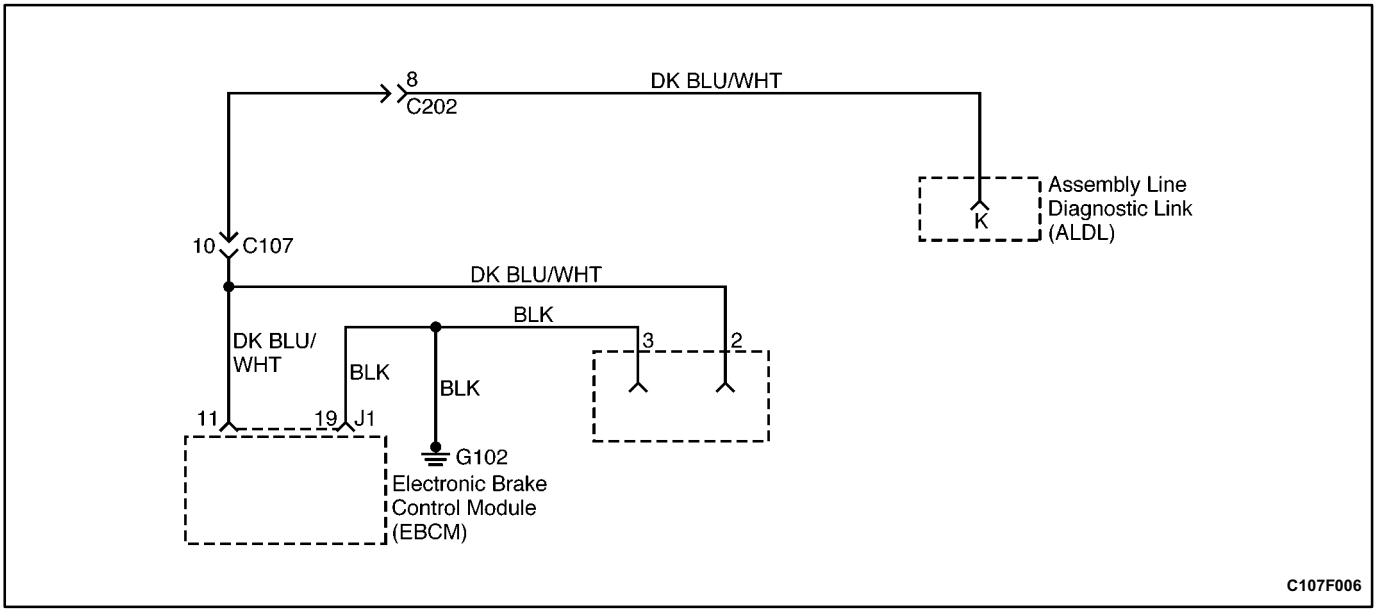

DIAGNOSTIC TROUBLE CODE (DTC) 55/56
LEFT REAR INLET AND OUTLET VALVE SOLENOID FAULT

Circuit Description

The solenoid valve coil circuits are supplied with power from the battery when the valve relay is energized. Switched ground is provided by the electronic brake control module (EBCM) to each coil.

Diagnosis

This procedure checks whether the left rear inlet and outlet valves are functioning.

Cause(s)

- A valve has failed.
- A solenoid coil is open or shorted.

Fail Action

ABS is disabled, and the ABS warning lamp is turned ON for the remainder of the ignition cycle. If the failure is intermittent, the EBCM will enable the system at the next ignition cycle and set a history DTC.

Test Description

The number(s) below refer to step(s) on the diagnostic table.

1. This begins the test of the inlet valve.
3. This tests the outlet valve.

DTC 55/56 - Left Rear Inlet and Outlet Valve Solenoid Fault

Step	Action	Value(s)	Yes	No
1	1. Raise and suitably support the vehicle at the corner being tested. 2. Turn the ignition switch to ON. 3. Install the scan tool to the assembly line diagnostic link (ALDL) and select „Wheel rear left" to begin the solenoid tests at that wheel. This will test both the inlet and the outlet valves. 4. When the scan tool indicates „Pressure hold," depress and hold the brake pedal until the end of the test. 5. Have an assistant attempt to rotate the wheel. Can the wheel be rotated?	-	Go to *Step 2*	Go to *Step 6*
2	1. Maintain pressure on the brake pedal. 2. When the scan tool indicates „Pressure increase," have an assistant attempt to rotate the wheel again. Can the wheel be rotated now?	-	Go to *Step 6*	Go to *Step 3*
3	1. Maintain pressure on the brake pedal. 2. When the scan tool indicates „Pressure release on," have an assistant attempt to rotate the wheel again. Can the wheel be rotated?	-	Go to *Step 4*	Go to *Step 6*
4	1. Release brake pedal pressure when the scan tool indicates „Pressure release off." 2. Clear all DTCs. 3. Road test the vehicle. Does the DTC set again?	-	Go to *Step 6*	Go to *Step 5*
5	1. Check the wiring harness and the connector terminals for an intermittent problem. 2. Repair any problem found. Is the repair complete?	-	System OK	-
6	Replace the ABS unit. Is the repair complete?	-	System OK	-

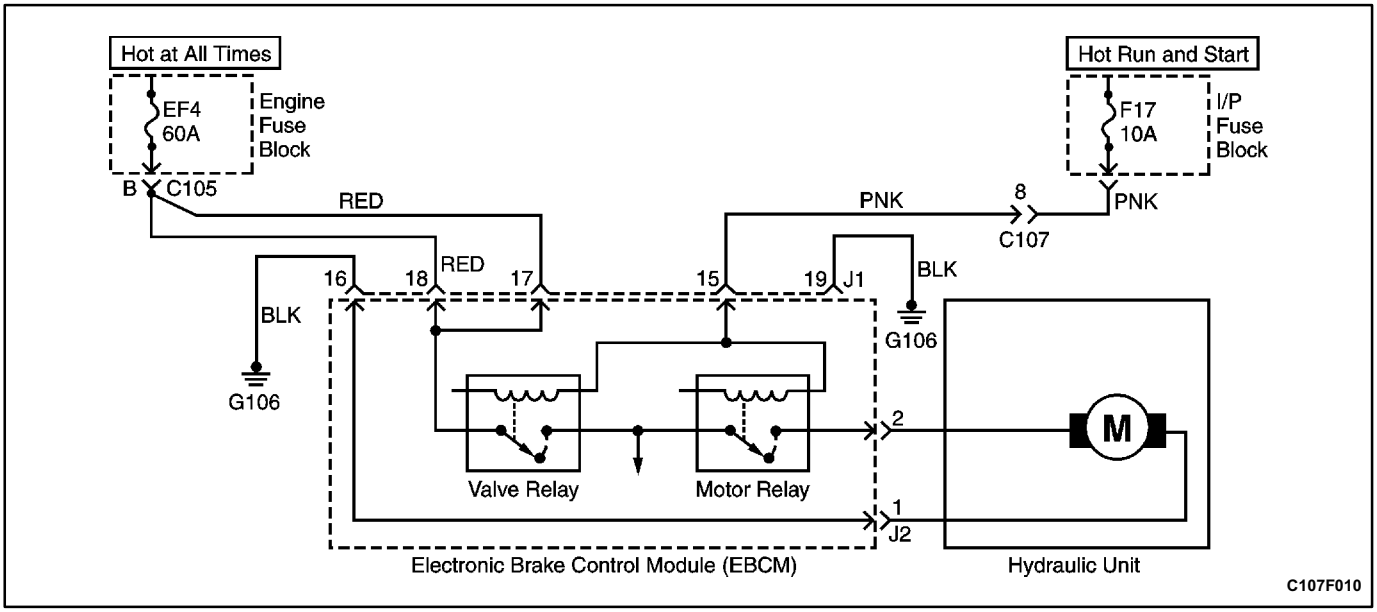

DIAGNOSTIC TROUBLE CODE (DTC) 61
PUMP MOTOR OR PUMP MOTOR RELAY FAULT

Circuit Description

When the electronic brake control module (EBCM) grounds the pump motor relay, it closes and provides battery voltage to the pump motor if the valve relay is closed. The EBCM senses the voltage applied to the pump motor to verify motor operation.

Diagnosis

This DTC sets when the EBCM detects B+ without motor relay activation or if the EBCM does not detect B+ after motor relay activation.

Cause(s)

- There is a faulty terminal in pump motor connector J2.
- There is a faulty terminal in EBCM connector J1.
- There is a problem in the ABS wiring harness.
- There is high resistance in the chassis ground.
- The EBCM is defective.
- There is a problem in the wiring from pump motor connector J2 to the motor.

Fail Action

ABS is disabled, and the ABS warning lamp is ON.

Test Description

The number(s) below refer to step(s) on the diagnostic table.

1. This step checks for connector damage.
3. This step checks for a poor ground connection.
7. This step checks for a possible problem with the motor connector at the ABS unit.

Diagnostic Aids

It is very important to perform a thorough inspection of the wiring and the connectors. Failure to do so may result in misdiagnosis, causing part replacement with reappearance of the malfunction.

DTC 61 - Pump Motor or Pump Motor Relay Fault

Step	Action	Value(s)	Yes	No
1	1. Disconnect connector J1 from the EBCM. 2. Examine terminal 16 on the harness connector and on the EBCM connector. Is the terminal damaged or corroded?	-	Go to *Step 2*	Go to *Step 3*
2	Repair or replace the terminal, the connector, the wiring harness, or the EBCM as required. Is the repair complete?	-	System OK	-
3	Measure the resistance from terminal 16 of the harness connector J1 to a good chassis ground. Is the resistance equal to the specified value?	≈0 Ω	Go to *Step 7*	Go to *Step 4*
4	Measure the resistance at the chassis ground connection G106. Is the resistance equal to the specified value?	≈0 Ω	Go to *Step 6*	Go to *Step 5*
5	Repair the connection at chassis ground G106. Is the repair complete?	-	System OK	-
6	Repair the open or the high resistance in the harness between terminal 16 of connector J1 and the ground lug, or replace the ABS wiring harness. Is the repair complete?	-	System OK	-
7	1. Remove the ABS unit from the vehicle. 2. Disconnect connector J2 and examine the terminals. Is there any sign of damage or corrosion that would prevent a good ground contact?	-	Go to *Step 8*	Go to *Step 9*
8	Repair or replace the defective terminal, connector, or ABS unit as required. Is the repair complete?	-	System OK	-
9	Replace the ABS unit. Is the repair complete?	-	System OK	-

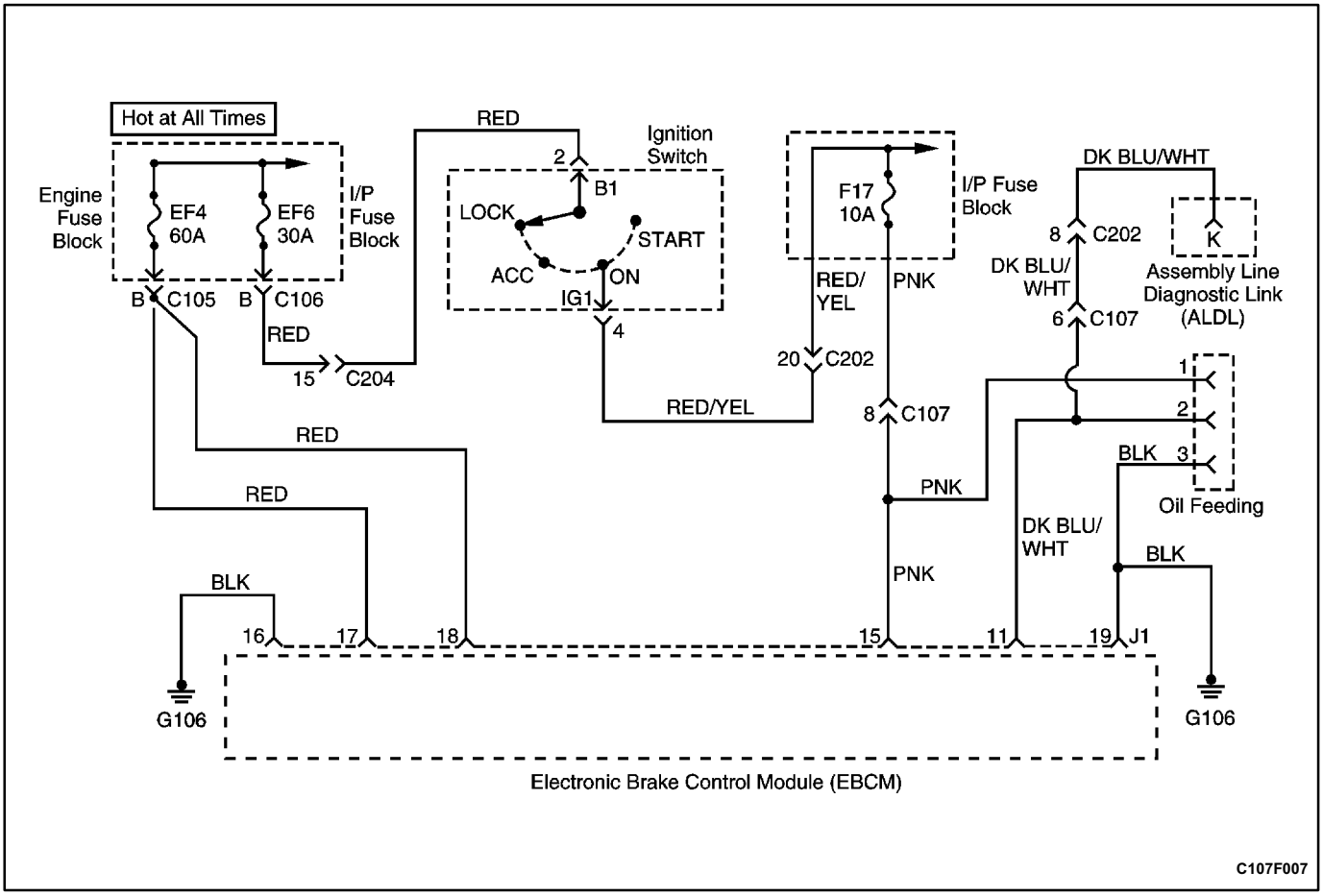

DIAGNOSTIC TROUBLE CODE (DTC) 63
VALVE RELAY CIRCUIT FAULT

Circuit Description

When the ABS is active, the valve relay provides voltage to actuate the solenoid valves. The valves do not use this voltage unless the ABS control module provides the ground for each solenoid coil.

DTC 63 will set if the valve relay voltage is low or if the relay supply line is at 12 volts when the ABS control module is not requesting it. This DTC will also set if the ABS control module detects three or more solenoid valve circuits are open or shorted during the selftest.

Diagnosis

This procedure checks whether there is a poor ground connection for the electronic brake control module (EBCM).

Cause(s)

- A connector terminal is corroded.
- The wiring harness is damaged.
- The ground terminal is not conducting properly.
- The EBCM is defective.

Fail Action

ABS/TCS is disabled, and the ABS warning lamp is turned ON for the remainder of the ignition cycle. If the failure is intermittent, the control module will enable the system at the next ignition cycle and set a history DTC 63.

Diagnostic Aids

It is very important to perform a thorough inspection of the wiring and the connectors. Failure to do so may result in misdiagnosis, causing part replacement with reappearance of the malfunction.

DTC 63 - Valve Relay Circuit Fault

Step	Action	Value(s)	Yes	No
1	1. Use a scan tool to clear all DTCs. 2. Road test the vehicle. Does DTC 63 set again?	-	Go to *Step 3*	Go to *Step 2*
2	1. Check all system wiring harness connectors and terminals, especially the EBCM, for any problem that could cause an intermittent condition. 2. Repair any intermittent problem found. Is the repair complete?	-	System OK	-
3	1. Disconnect ABS harness connector J1 from the EBCM. 2. Examine terminal 19 on the harness connector and the EBCM connector. Is there damage or corrosion at terminal 19?	-	Go to *Step 5*	Go to *Step 4*
4	Repair the terminal or the connector, or replace the ABS harness or ABS unit as required. Is the repair complete?	-	System OK	-
5	Measure the resistance from terminal 19 of the harness connector J1 to a good chassis ground. Is the resistance equal to the specified value?	≈0 Ω	Go to *Step 6*	Go to *Step 7*
6	Replace the ABS unit. Is the repair complete?	-	System OK	-
7	Measure the resistance from terminal 19 of the harness connector J1 to the ground lug at G106. Is the resistance equal to the specified value?	≈0 Ω	Go to *Step 8*	Go to *Step 9*
8	Repair the chassis connection at the ground lug. Is the repair complete?	-	System OK	-
9	Repair the open or the high resistance in the ABS harness, or replace the harness as required. Is the repair complete?	-	System OK	-

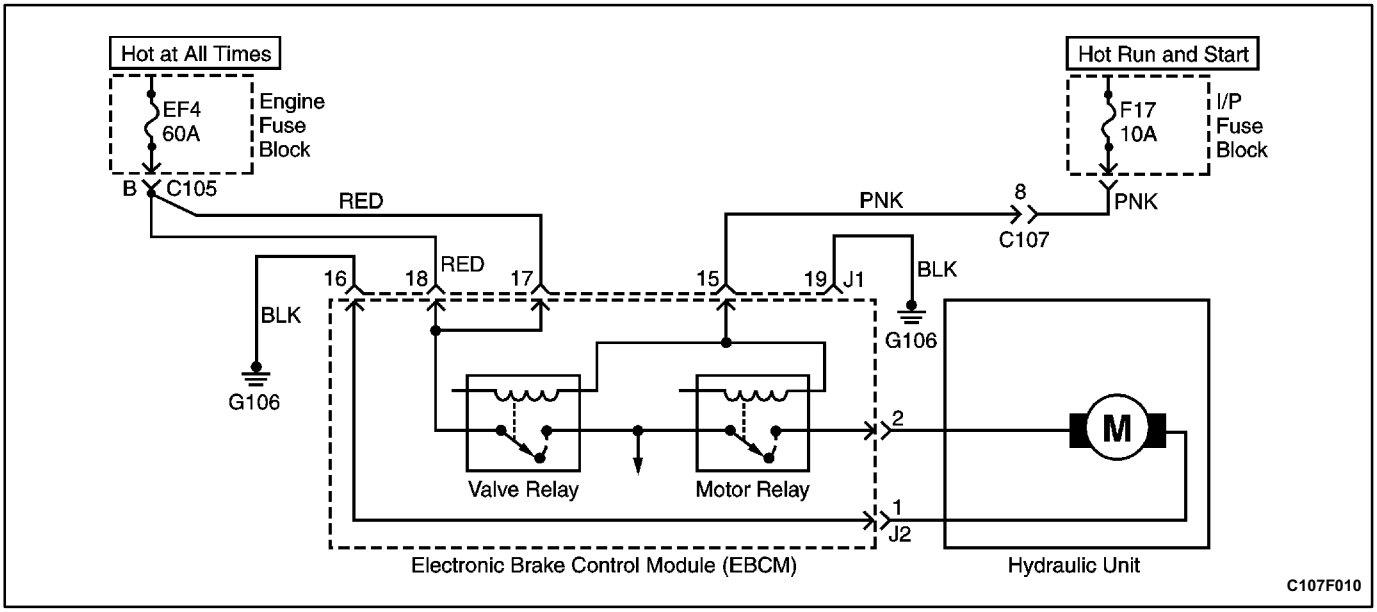

DIAGNOSTIC TROUBLE CODE (DTC) 65
PUMP FAULT LONG TERM (TCS ONLY)

Fail Action

The antilock brake system (ABS) warning lamp is turned ON and the ABS is disabled for the remainder of the ignition cycle. If the failure is intermittent, the EBCM will enable the system at the next ignition cycle and set a history DTC.

Diagnosis

There is no diagnostic procedure for this problem. If DTC65 is set, replace the ABS unit.

BLANK

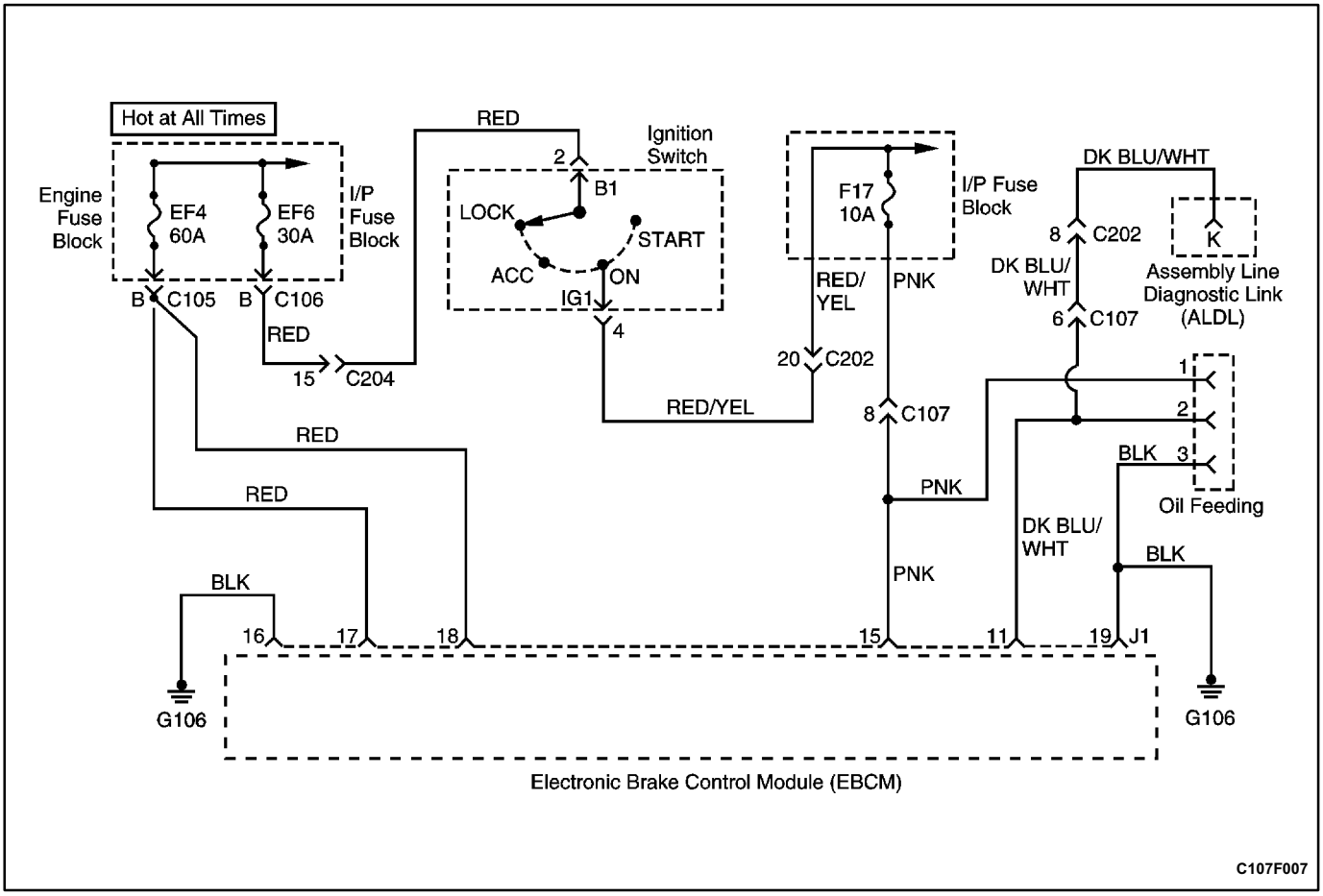

DIAGNOSTIC TROUBLE CODE (DTC) 71
ABS CONTROL MODULE INTERNAL FAULT

Circuit Description

The ABS control module performs various diagnostic checks on itself. If it finds a problem, it sets DTC 71.

Diagnosis

This procedure checks whether there is a poor ground connection for the electronic brake control module (EBCM).

Cause(s)

- A connector terminal is corroded.
- The EBCM is malfunctioning.

Fail Action

ABS is disabled, and the ABS warning lamp is turned ON. If the failure is intermittent, the control module will enable the system at the next ignition cycle and will store a history DTC 71.

Test Description

The number(s) below refer to step(s) on the diagnostic table.

3. This step begins the testing for a poor voltage or ground connection.

Diagnostic Aids

It is very important to perform a thorough inspection of the wiring and the connectors. Failure to inspect the wiring and the connectors carefully and completely may result in misdiagnosis, causing part replacement with the reappearance of the malfunction.

DTC 71 - ABS Control Module Internal Fault

Step	Action	Value(s)	Yes	No
1	Use the scan tool to determine if any other DTCs are set. Are other DTCs set?	-	Go to the tables for the other DTCs	Go to *Step 2*
2	Clear all DTCs and road test the vehicle. Does DTC 71 set again?	-	Go to *Step 4*	Go to *Step 3*
3	1. Check all wiring harness connectors and terminals, especially those at the EBCM, for any condition that could cause an intermittent. 2. Repair any problems found. Is the repair complete?	-	System OK	-
4	1. Turn the ignition switch to OFF. 2. Disconnect EBCM connector J1. 3. Turn the ignition switch to ON. 4. Measure the voltage between ground and terminals 15, 17, and 18 of the EBCM harness connector J1. Is the voltage equal to the specified value?	11-14 V	Go to *Step 6*	Go to *Step 5*
5	1. Check the voltage supply and the ground connections to the EBCM. 2. Repair any open or high resistance found. Is the repair complete?	-	System OK	-
6	Check the EBCM connector J1 for any ineffective terminals. Are there any problems?	-	Go to *Step 7*	Go to *Step 8*
7	Repair any connector problem found. Is the repair complete?	-	System OK	-
8	Clear all DTCs and road test the vehicle. Does DTC 71 set again?	-	Go to *Step 9*	System OK
9	Replace the ABS unit. Is the repair complete?	-	System OK	-

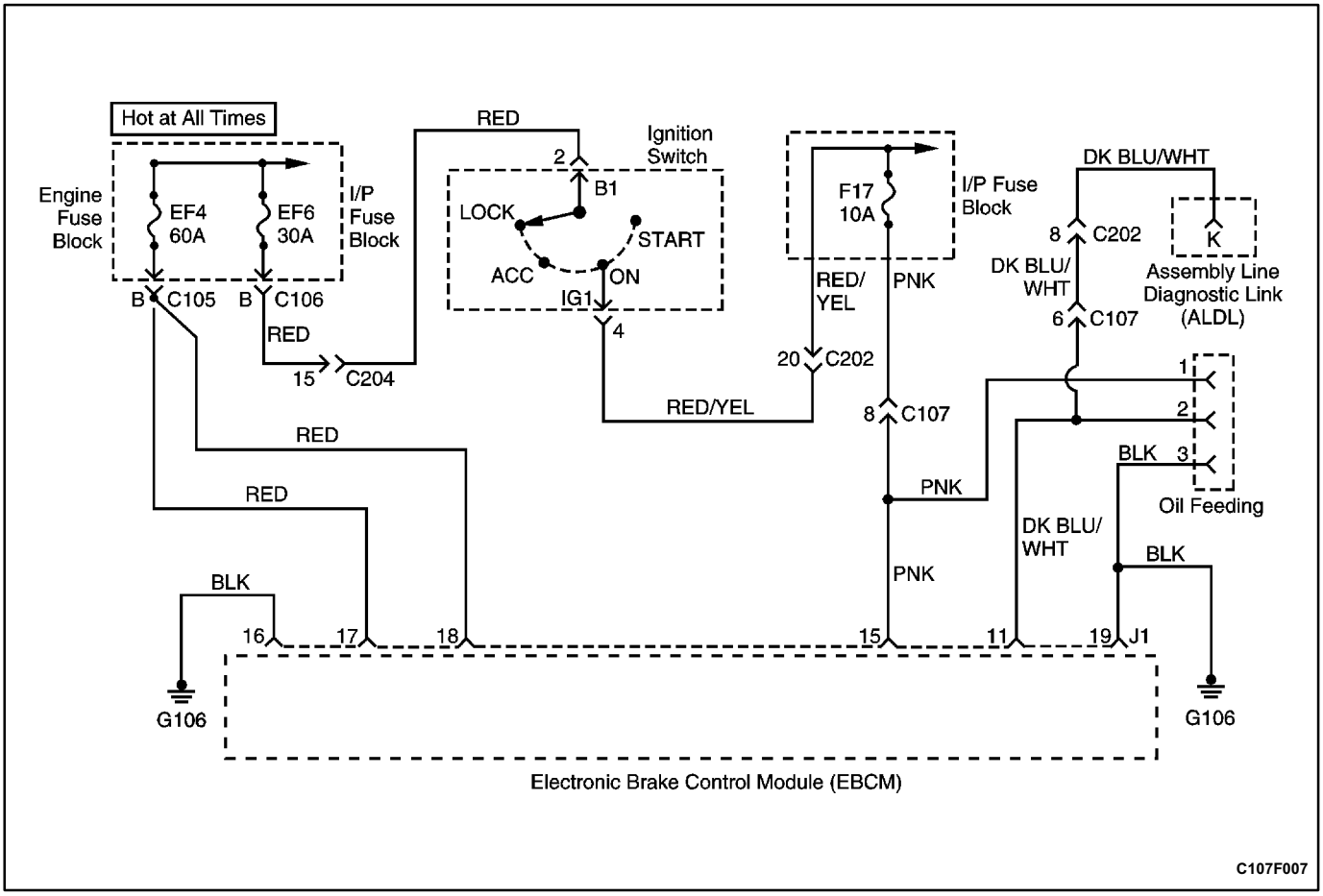

DIAGNOSTIC TROUBLE CODE (DTC) 85
LOW VOLTAGE FAULT

Circuit Description

Proper operation of the electronic brake control module (EBCM) requires a certain minimum voltage. The EBCM monitors the ignition feed circuit to determine if the voltage falls below a minimum level.

Diagnosis

This test checks for battery output, proper grounding, blown fuses, faulty ignition switch, and problems in the circuitry.

Cause(s)

- The battery is defective.
- There is a defective ground connection.
- A connector is damaged.
- A wire is broken or shorted.
- A fuse is blown.
- The ignition switch is malfunctioning.

Fail Action

ABS action is disabled during the period of low voltage, and the ABS warning lamp is ON for the remainder of the ignition cycle. If the failure is intermittent, the EBCM will enable the system at the next ignition cycle and set a history DTC 85.

Test Description

The number(s) below refer to step(s) on the diagnostic table.

1. This step determines whether there is voltage at the battery and at the high current source.
7. This step checks for voltage at the ignition 1 source.
11. This step begins the check for voltage at the EBCM end of the ABS harness.
15. This step checks for a defective ground connection.
16. This is a check for a defective EBCM connector.

Diagnostic Aids

It is very important to perform a thorough inspection of the wiring and the connectors. Failure to do so may result in misdiagnosis, causing part replacement with a reappearance of the malfunction.

DTC 85 - Low Voltage Fault

Step	Action	Value(s)	Yes	No
1	Check the voltage at the battery. Is the voltage within the specified value?	11-14 V	Go to *Step 3*	Go to *Step 2*
2	Charge or replace the battery as required. Is the repair complete?	-	System OK	-
3	Check fuse EF4 in the engine fuse block. Is the fuse blown?	-	Go to *Step 4*	Go to *Step 7*
4	1. Replace fuse EF4. 2. Turn the ignition to ON. Does the fuse blow again?	-	Go to *Step 5*	Go to *Step 6*
5	1. Turn the ignition to OFF. 2. Trace the RED wires in the ABS wiring harness from terminal B of C105 at the engine fuse block to terminals 17 and 18 of the EBCM connector J1. 3. Repair any short circuit found along this path. Is the repair complete?	-	System OK	-
6	1. Turn the ignition switch to OFF. 2. Install the scan tool. 3. Clear all DTCs. 4. Road test the vehicle. Does DTC 85 reset?	-	System OK	-
7	Check fuse F17 in the I/P fuse block. Is the fuse blown?	-	Go to *Step 8*	Go to *Step 11*
8	1. Replace fuse F17. 2. Turn the ignition to ON. Does the fuse blow again?	-	Go to *Step 9*	Go to *Step 10*
9	1. Turn the ignition to OFF. 2. Trace the PNK wire from fuse F17 to terminal 8 of connector C107, and from there to terminal 15 of the EBCM connector J1. 3. Repair any short circuit found along this path. Is the repair complete?	-	System OK	-
10	1. Turn the ignition switch to OFF. 2. Install the scan tool. 3. Clear all DTCs. 4. Road test the vehicle. Does DTC 85 reset?	-	System OK	-
11	1. Disconnect the EBCM connector J1 from the EBCM. 2. Turn the ignition to ON. 3. Check for the presence of battery voltage between ground and terminal 17, and between ground and terminal 18. Is the voltage within the specified value?	11-14 V	Go to *Step 13*	Go to *Step 12*
12	1. Turn the ignition switch to OFF. 2. Trace the orange wires between terminals 17 and 18 of the EBCM connector J1 to terminal B of connector C105 at the engine fuse block. 3. Repair the open in this circuit. Is the repair complete?	-	System OK	-

DTC 85 - Low Voltage Fault (Cont'd)

Step	Action	Value(s)	Yes	No
13	Check the voltage between ground and terminal 15 of the EBCM connector J1. Is the voltage within the specified value?	11-14 V	Go to *Step 17*	Go to *Step 14*
14	1. Turn the ignition switch to OFF. 2. Check fuse EF6 in the engine fuse block. Is the fuse blown?	-	Go to *Step 15*	Go to *Step 16*
15	Replace fuse EF6. Is the repair complete?	-	System OK	-
16	1. Examine circuit PNK between terminal 15 of the EBCM connector J1 to terminal 8 of connector C107, to F17 in the I/P fuse block. 2. Examine the RED/YEL wire from the I/P fuse block to terminal 20 of connector C202, and from there to terminal 4 (IG1) of the ignition switch. 3. Examine the RED wire from terminal 2 (B1) of the ignition switch to terminal 15 of connector C204 to terminal A of connector C106 at the engine fuse block. 4. Repair the open in the wiring or possibly bad connector terminal, or defective ignition switch. Is the repair complete?	-	System OK	-
17	1. Turn the ignition to OFF. 2. Check the resistance between ground and terminals 16 and 19 of the ABS harness EBCM connector. Is the resistance equal to the specified value?	0 Ω	Go to *Step 18*	Go to *Step 20*
18	Examine terminals 15, 16, 17, 18, and 19 of the EBCM connector. Is there a defective terminal?	-	Go to *Step 19*	Go to *Step 21*
19	Repair the defective terminal or replace the connector or wiring harness as required. Is the repair complete?	-	System OK	-
20	Repair the defective ground connection. Is the repair complete?	-	System OK	-
21	1. Install the scan tool. 2. Clear all DTCs. 3. Road test the vehicle. Does DTC 85 set again?	-	Go to *Step 22*	Go to *Step 23*
22	Replace the ABS unit. Is the repair complete?	-	System OK	-
23	1. Examine the wiring harness and connectors for causes of intermittent problems. 2. Repair any intermittent problem found. Is the repair complete?	-	System OK	-

MAINTENANCE AND REPAIR

ON-VEHICLE SERVICE

SERVICE PRECAUTIONS

Caution: Brake fluid may irritate eyes and skin. In case of contact, take the following actions:

- ***Eye contact - rinse thoroughly with water.***
- ***Skin contact - wash with soap and water.***
- ***Ingestion - consult a physician immediately.***

Caution: To help avoid personal injury due to poor braking, DO NOT tap into the vehicle's brake system to operate a trailer brake system.

Notice: When fasteners are removed, always reinstall them at the same location from which they were removed. If a fastener needs to be replaced, use the correct part number fastener for that application. If the correct part number fastener is not available, a fastener of equal size and strength (or stronger) may be used. Fasteners that are not reused, and those requiring threadlocking compound will be called out. The correct torque values must be used when installing fasteners that require them. If the above procedures are not followed, parts or system damage could result.

Notice: Use only DOT 3 equivalent hydraulic brake fluid. The use of DOT 5 (silicone) brake fluid is not recommended. Reduced brake performance or durability may result.

Notice: Avoid spilling brake fluid on any of the vehicle's painted surfaces, wiring, cables, or electrical connectors. Brake fluid will damage paint and electrical connections. If any fluid is spilled on the vehicle, flush the area with water to lessen the damage.

Computer System Service Precautions

Take care to avoid electronic brake control module (EBCM) circuit overloading. In testing for opens or shorts, do not ground or apply voltage to any circuit unless instructed to do so by the diagnostic procedure. Test circuits only with a high impedance multimeter. Never remove or apply power to any control module with the ignition switch in the ON position. Always turn the ignition to the OFF position before removing or connecting battery cables, fuses, or connectors.

General Service Precautions

- Disconnect the EBCM connector before performing any vehicle welding work using an electric arc welder.
- Do not attempt to disassemble any component designated as nonserviceable. The hydraulic modulator and the EBCM can be separated from each other and replaced separately but cannot be serviced. They have no replaceable parts, and there is no access to the components they contain.

BLEEDING SYSTEM

Replacement modulators are shipped already filled and bled. In normal procedures requiring removal of the modulator, such as to replace the EBCM, air will not enter the modulator, and normal bleeding will be all that is needed. For this procedure, refer to *Section 4A, Hydraulic Brakes.*

If air enters the hydraulic modulator, or if an unfilled modulator is installed, use the brake bleeding program in the scan tool to bleed the modulator. Manual bleeding of the hydraulic modulator is not possible.

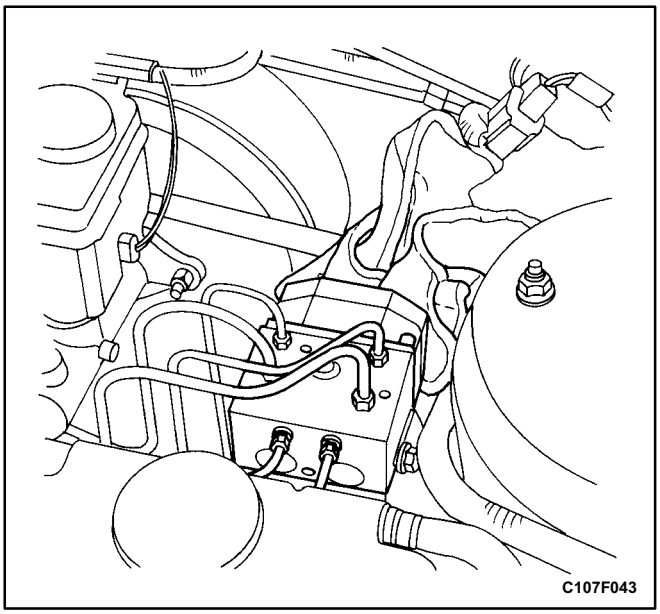

ABS 5.3 ASSEMBLY

(Left-Hand Drive Shown, Right-Hand Drive Similar)

Removal Procedure

1. Disconnect the negative battery cable.
2. Disconnect the 26 or 31 pin ABS wiring harness connector J1 from its socket on the EBCM.
3. Cover the connector and the socket with shop cloths to protect them from brake fluid.

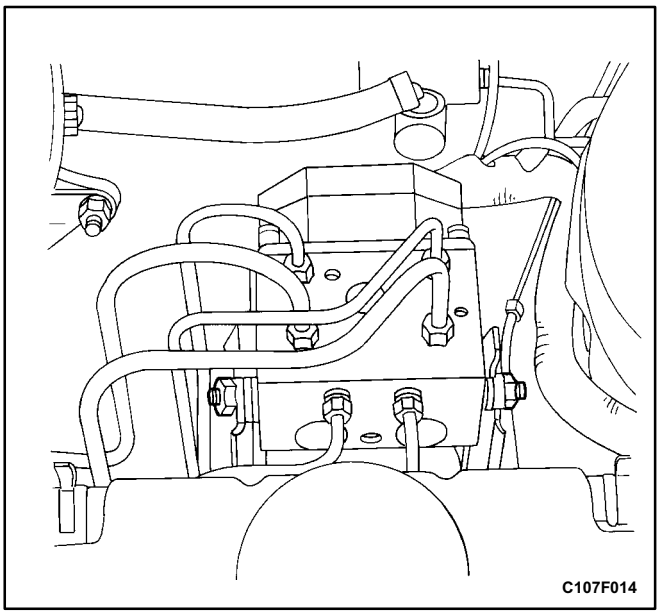

Notice: Take care not to allow air into the hydraulic unit or into the brake pipes from the master cylinder. If air gets into the hydraulic unit, it will require a bleeding procedure using a scan tool programmed for the ABS 5.3 system. As long as no air enters the hydraulic unit, a simple bleeding procedure is all the system will require.

4. Remove the brake pipes from the hydraulic unit. It may be necessary to loosen the brake pipe nuts on the master cylinder to allow for moving those pipes out of the way.
5. Loosen the mounting nuts on the hydraulic unit.
6. Move the brake pipes aside far enough to allow for lifting the ABS 5.3 unit out of the mounting bracket.
7. Tighten the brake pipe nuts on the master cylinder to avoid leaking brake fluid.
8. Cap the brake pipes.

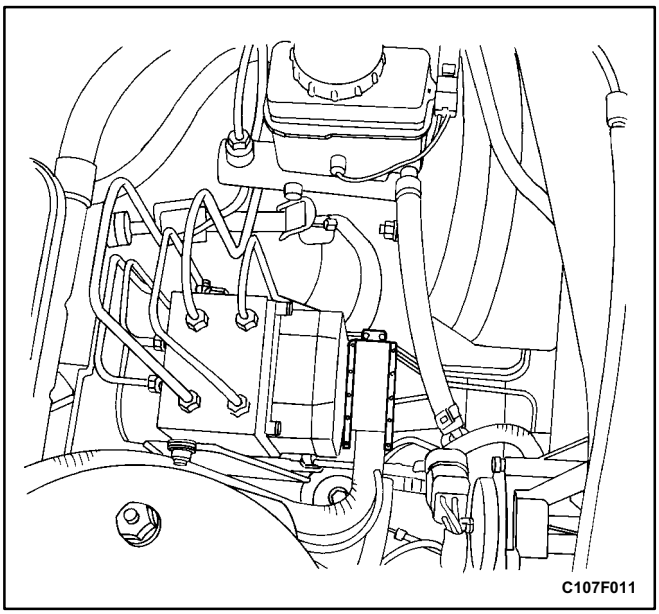

Installation Procedure

1. Insert the ABS 5.3 hydraulic unit into its mounting bracket and install the nuts.

   Tighten

   Tighten the ABS 5.3 mounting nuts to 9 N•m (80 lb•in).
2. Remove the screw plugs and install all of the hydraulic brake pipes.

   Tighten

   Tighten the brake pipe nuts to 12 N•m (106 lb•in).
3. Connect the 26 or 31pin wiring harness connector J1.
4. Connect the negative battery cable.
5. Bleed the hydraulic system. Refer to *Section 4A, Hydraulic Brakes.*

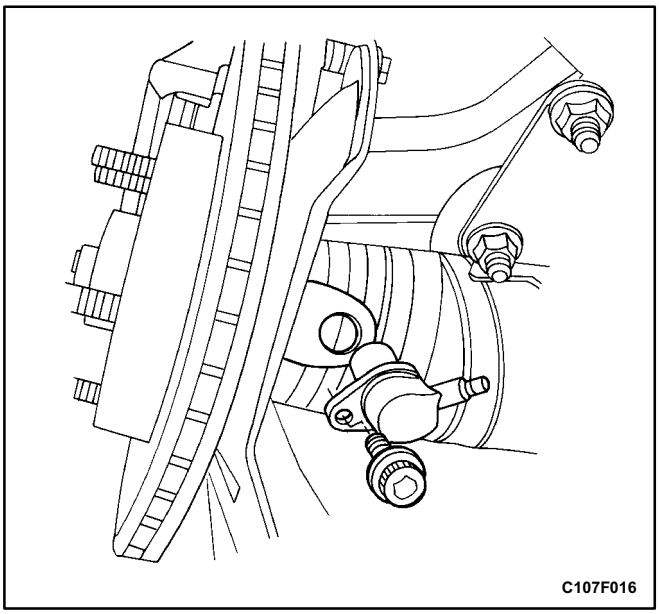

FRONT WHEEL SPEED SENSOR

Removal Procedure

1. Disconnect the negative battery cable.
2. Disconnect the front wheel speed sensor electrical connector.
3. Raise and suitably support the vehicle.
4. Remove the wheel. Refer to *Section 2E, Tires and Wheels*.
5. Turn the steering wheel to expose the speed sensor. It is located at the rear of the steering knuckle near the tie rod end.
6. Remove the bolt and the front wheel speed sensor from the steering knuckle.

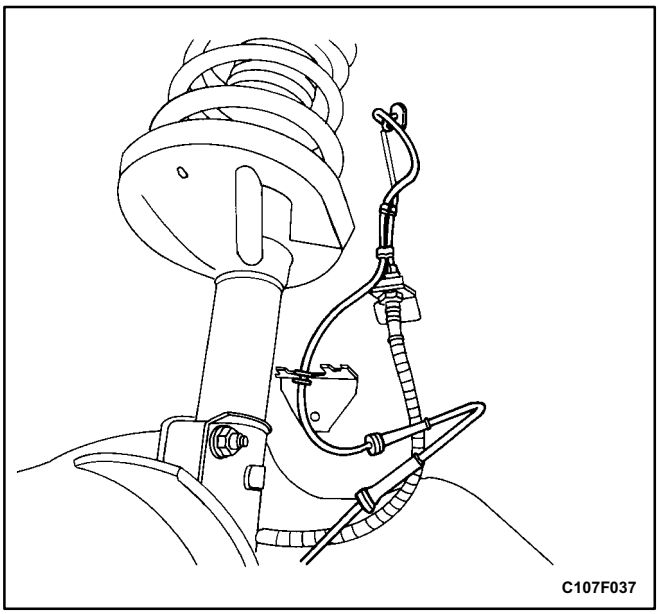

7. Free the feedthrough grommet for the speed sensor harness and the hydraulic pipe from the strut tower. Remove the speed sensor harness from it so that the connector can pass through the hole in the strut tower.
8. Free the sensor harness from the grommet holders and the clamps and pull it through the fender.

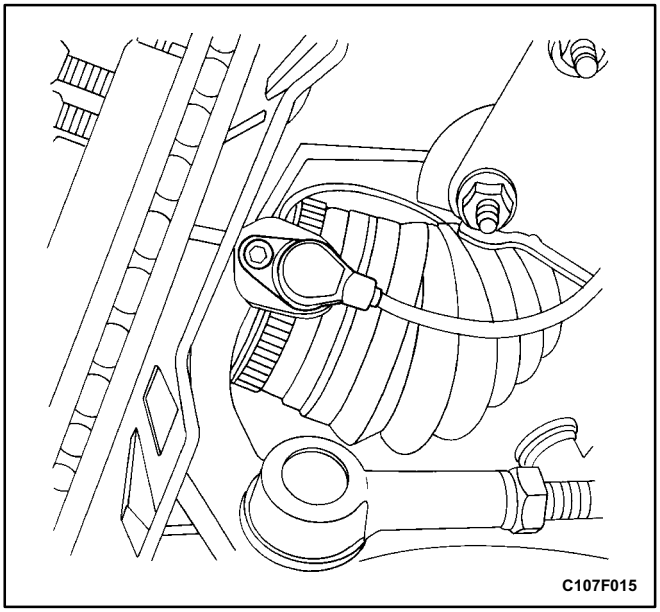

Installation Procedure

1. Install the front wheel speed sensor to the steering knuckle. Secure it with the bolt.

   Tighten

   Tighten the front wheel speed sensor bolt to 8 N•m (71 lb•in).

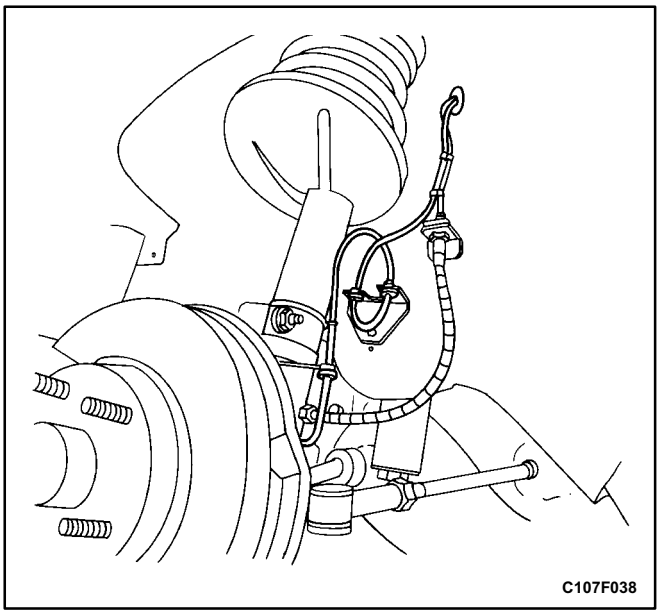

2. Feed the sensor harness into the engine compartment, insert it into the grommet, and secure the grommet into the hole in the strut tower.
3. Secure the harness into the grommet holders and the clamps under the fender.
4. Replace the wheel. Refer to *Section 2E, Tires and Wheels*.
5. Lower the vehicle.
6. Connect the front wheel speed sensor electrical connector.
7. Connect the negative battery cable.

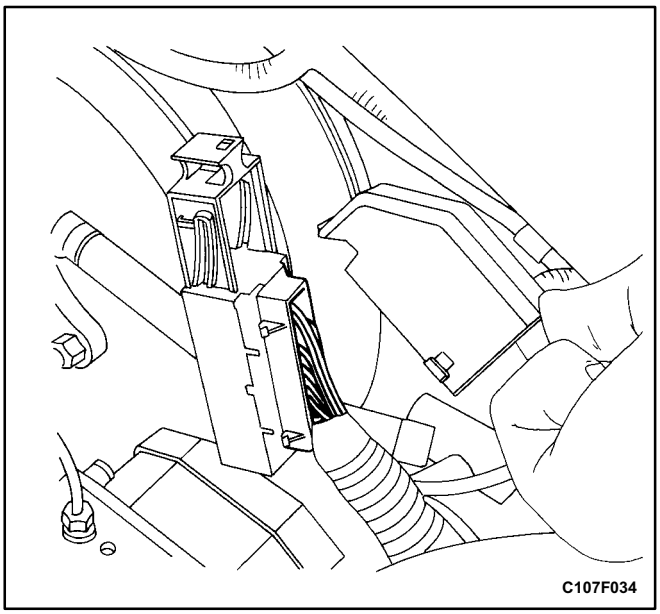

FRONT WHEEL SPEED SENSOR JUMPER HARNESS

(Left-Hand Drive Shown, Right-Hand Drive Similar)

Removal Procedure

1. Disconnect the negative battery cable.
2. Disconnect connector J1 from the EBCM.
3. Remove the appropriate terminals from connector J1:
   - Right side - terminals 4 (PRL) and 5 (YEL).
   - Left side - terminals 6 (WHT) and 7 (ORN).

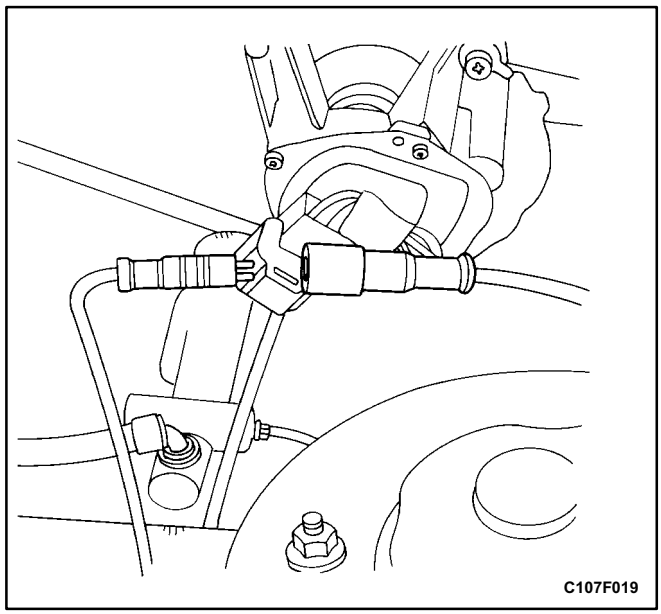

4. Both speed sensor harnesses break out of the ABS wiring harness just beyond the ABS connector J1. The right side speed sensor harness crosses the top of the fire wall to the right side fender area. The left side speed sensor harness goes directly to the left side fender area.
5. Free the speed sensor harness from the wiring harness.
6. Remove the front wheel speed sensor electrical connector from the retaining clamps and disconnect the harness from the sensor connector.

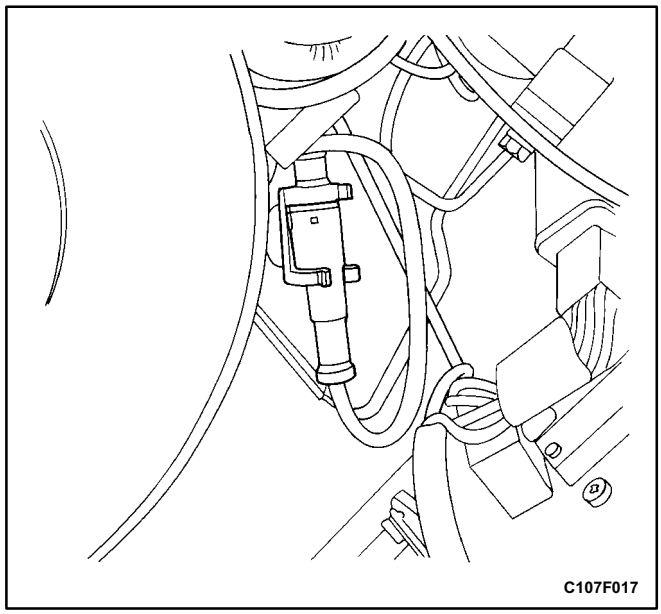

Installation Procedure

1. Install the front wheel speed sensor jumper harness.
2. Connect the front wheel speed sensor electrical connector and secure it into the clamps.

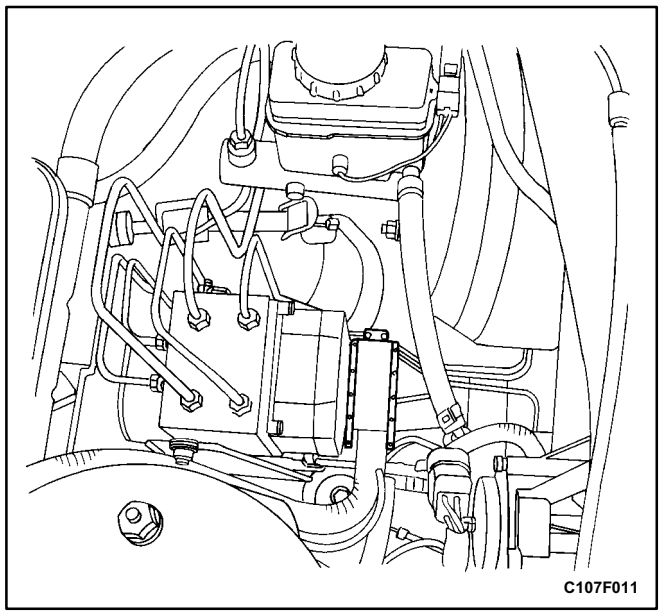

3. Replace the jumper harness into the wiring harness.
4. Insert the terminals into connector J1 as they had been removed:
   - Right side - terminals 4 (PPL) and 5 (YEL).
   - Left side - terminals 6 (WHT) and 7 (ORN).
5. Connect EBCM connector J1.
6. Connect the negative battery cable.

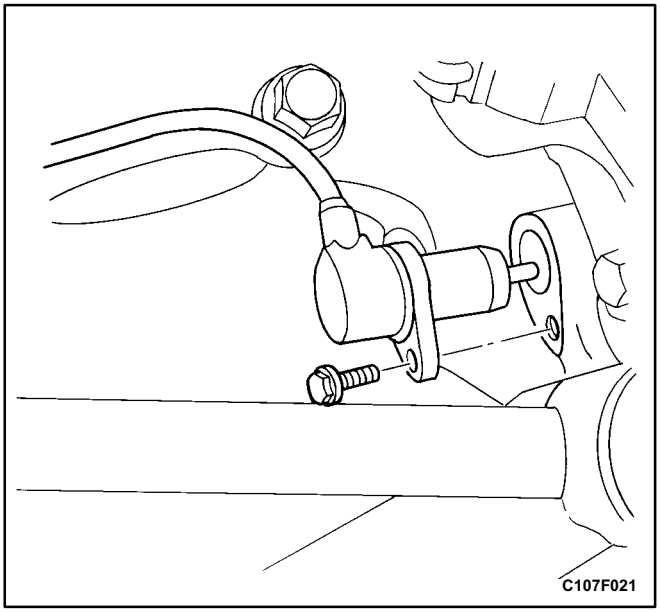

REAR WHEEL SPEED SENSOR

Removal Procedure

1. Disconnect the negative battery cable.
2. Raise and suitably support the vehicle.
3. Remove the bolt and the rear wheel speed sensor from the rear knuckle.

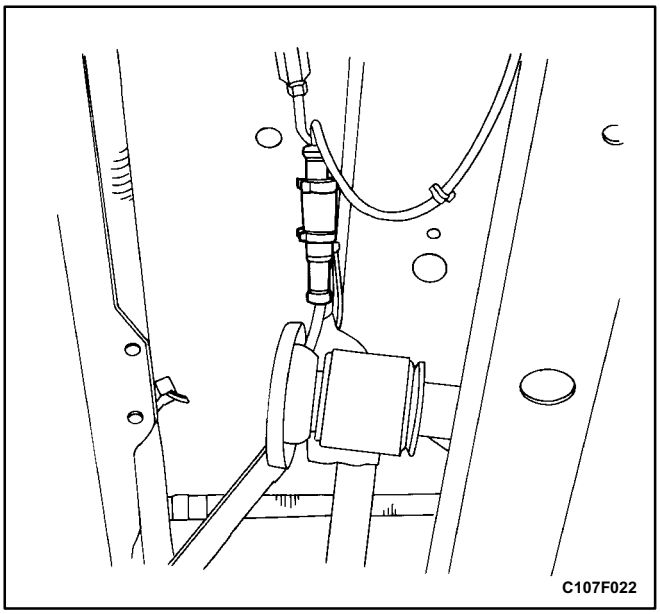

4. Remove the speed sensor cable grommets from their clamps.
5. Remove the speed sensor cable from the clamps securing it to the hydraulic pipe.
6. Remove the speed sensor cable connector from its clamps and disconnect the speed sensor cable from the harness.

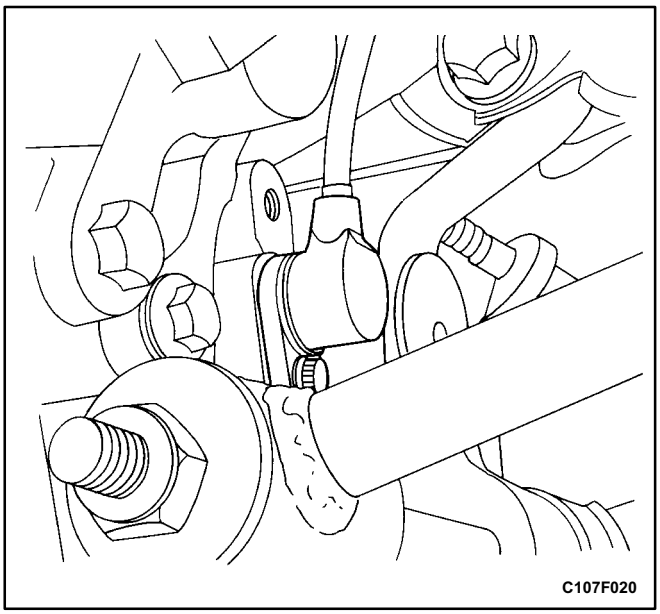

Installation Procedure

1. Install the rear wheel speed sensor to the rear knuckle. Secure it with the bolt.

   Tighten

   Tighten the rear wheel speed sensor bolt to 8 N•m (71 lb•in).

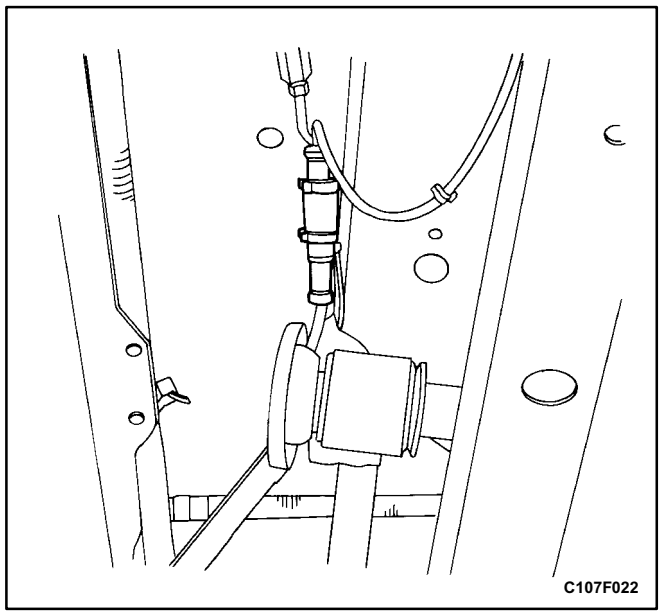

2. Connect the rear wheel speed sensor electrical connector.
3. Secure the speed sensor cable into its clamps on the hydraulic pipe.
4. Secure the speed sensor cable grommets into their clamps inside the fender well.
5. Lower the vehicle.
6. Connect the negative battery cable.

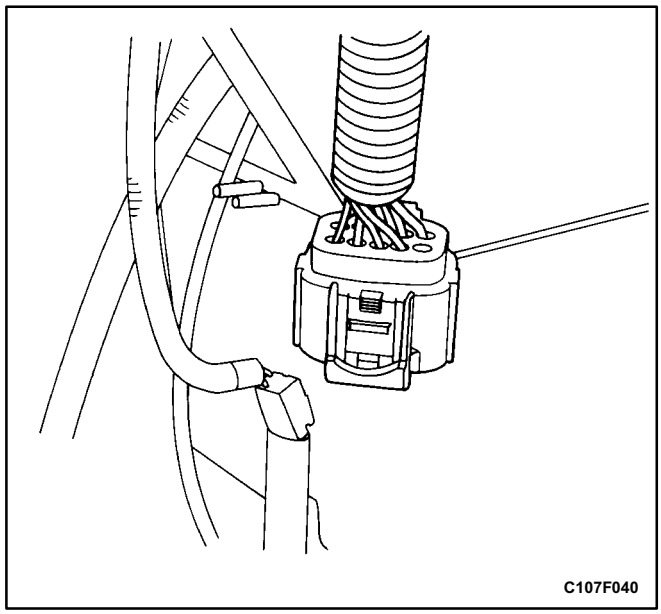

REAR WHEEL SPEED SENSOR JUMPER HARNESS

Removal Procedure

1. Remove the negative battery cable.
2. Raise and suitably support the vehicle.
3. Remove the left front wheel. Refer to *Section 2E, Tires and Wheels*.
4. Remove the wheel well splash shield inside the left front wheel arch to expose the body wiring harness where it enters the engine compartment. Refer to *Section 9R, Body Front End.*
5. Disconnect the body harness from the ABS harness at connector C107. This is forward of the left front wheel arch, between the engine fuse block and the wheel arch.
6. Pull the body harness end of C107 into the wheel arch area and remove the DK BLU/BRN pair of speed sensor wires appropriate for the harness being replaced.

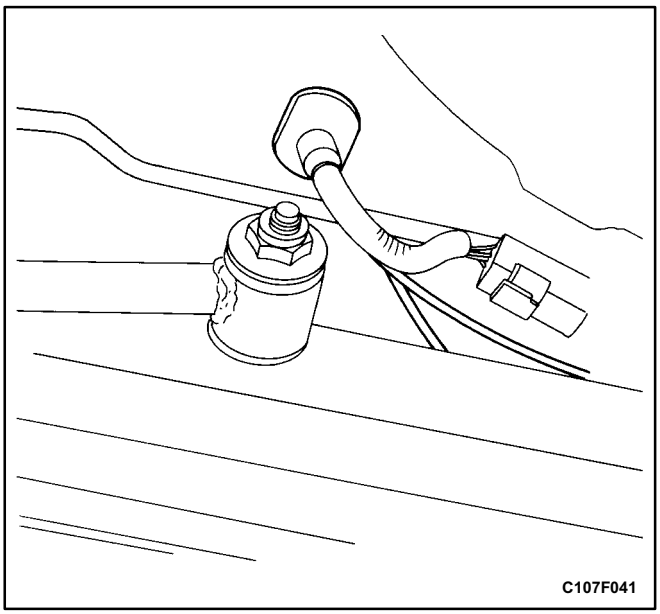

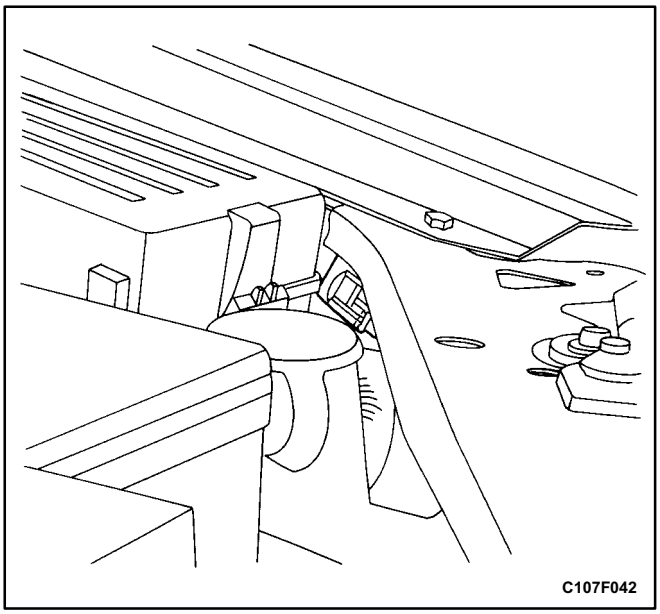

7. Open the body harness cover enough to free the speed sensor harness being replaced.
8. Lower the vehicle.
9. Expose the body harness inside the vehicle body and free the speed sensor harness being replaced.
10. Open the trunk, uncover the spare tire compartment, remove the tape from the feedthrough grommet, and free the speed sensor harness from the body harness.
11. Raise and suitably support the vehicle.
12. Disconnect the speed sensor cable from the sensor harness cable being replaced.
13. Remove the tape sealing the wiring harness and the rear speed sensor harnesses to the grommet passing them through the floor of the vehicle.
14. Pull the harness being replaced through the grommet.

Installation Procedure

1. Pass the harness through the grommet in the floor.
2. Connect the new wheel speed sensor harness to the wheel speed sensor.
3. Secure the connector in its clamp.
4. Adjust the cable length and tape the grommet opening under the vehicle.
5. Lower the vehicle.
6. Tape the grommet opening inside the vehicle.
7. Pass the harness through the grommet and on into the engine compartment.
8. Install terminals onto the harness wires and insert the new terminals into the appropriate cavities of connector C107.
9. Reconnect connector C107 to the ABS harness.
10. Secure the new speed sensor harness into the body wiring harness.
11. Replace the wheel well splash shield. Refer to *Section 9R, Body Front End.*
12. Replace the left front wheel. Refer to *Section 2E, Tires and Wheels*.
13. Lower the vehicle.
14. Connect the negative battery cable.

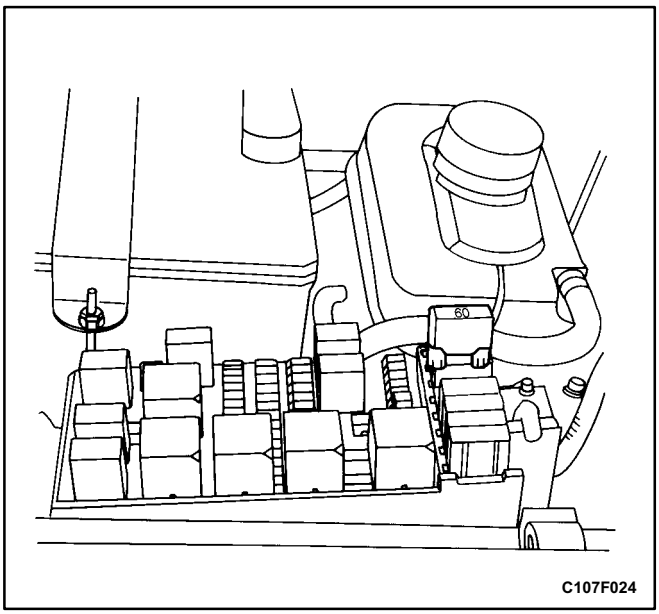

SYSTEM FUSE

Removal Procedure

The ABS system fuse, EF4, is located in the engine fuse block. Counting from the surge tank toward the fender, it is the fourth system fuse in the row at the strut tower end of the fuse block.

1. Disconnect the negative battery cable.
2. Remove the system fuse from its socket.

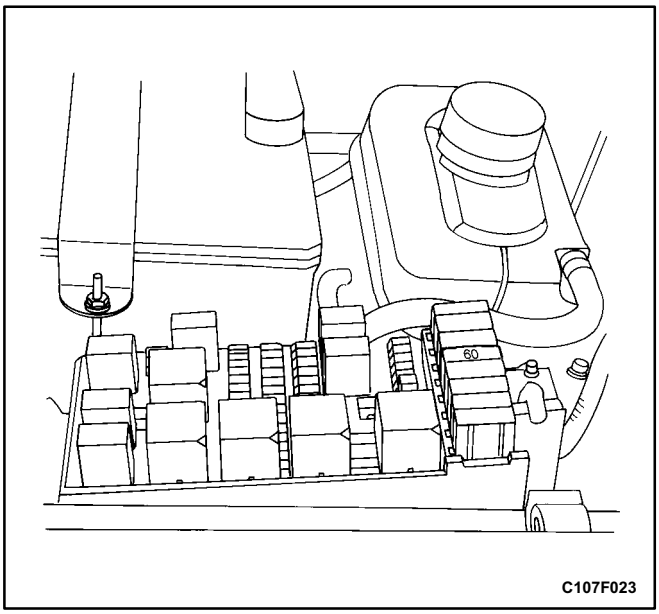

Installation Procedure

1. Install a new 60 amp system fuse into the socket.
2. Connect the negative battery cable.

INDICATORS

The indicator lamps associated with ABS operation are part of the instrument cluster. Refer to *Section 9E, Instrumentation/Driver Information*, for removal and replacement details.

GENERAL DESCRIPTION AND SYSTEM OPERATION

BASIC KNOWLEDGE REQUIRED

Before using this section, it is important that you have a basic knowledge of the following items. Without this knowledge, it will be difficult to use the diagnostic procedures contained in this section.

- Basic Electrical Circuits - You should understand the basic theory of electricity and know the meaning of voltage, current (amps), and resistance (ohms). You should understand what happens in a circuit with an open or shorted wire. You should be able to read and understand a wiring diagram.
- Use of Circuit Testing Tools - You should know how to use a test light and how to bypass components to test circuits using fused jumper wires. You should be familiar with a digital multimeter. You should be able to measure voltage, resistance, and current, and be familiar with the controls and how to use them correctly.

ABS SYSTEM COMPONENTS

The ABS 5.3 Antilock Braking System (ABS) consists of a conventional hydraulic brake system plus antilock components. The conventional brake system includes a vacuum booster, master cylinder, front disc brakes, rear leading/trailing drum brakes, interconnecting hydraulic brake pipes and hoses, brake fluid level sensor and the BRAKE indicator.

The ABS components include a hydraulic unit, an electronic brake control module (EBCM), two system fuses, four wheel speed sensors (one at each wheel), interconnecting wiring, the ABS indicator, and the rear disk brakes. See „ABS Component Locator” in this section for the general layout of this system.

The hydraulic unit with the attached EBCM is located between the surge tank and the fire wall on the left side of the vehicle.

The basic hydraulic unit configuration consists of hydraulic check valves, two solenoid valves for each wheel, a hydraulic pump, and two accumulators. The hydraulic unit controls hydraulic pressure to the front calipers and rear wheel cylinders by modulating hydraulic pressure to prevent wheel lockup.

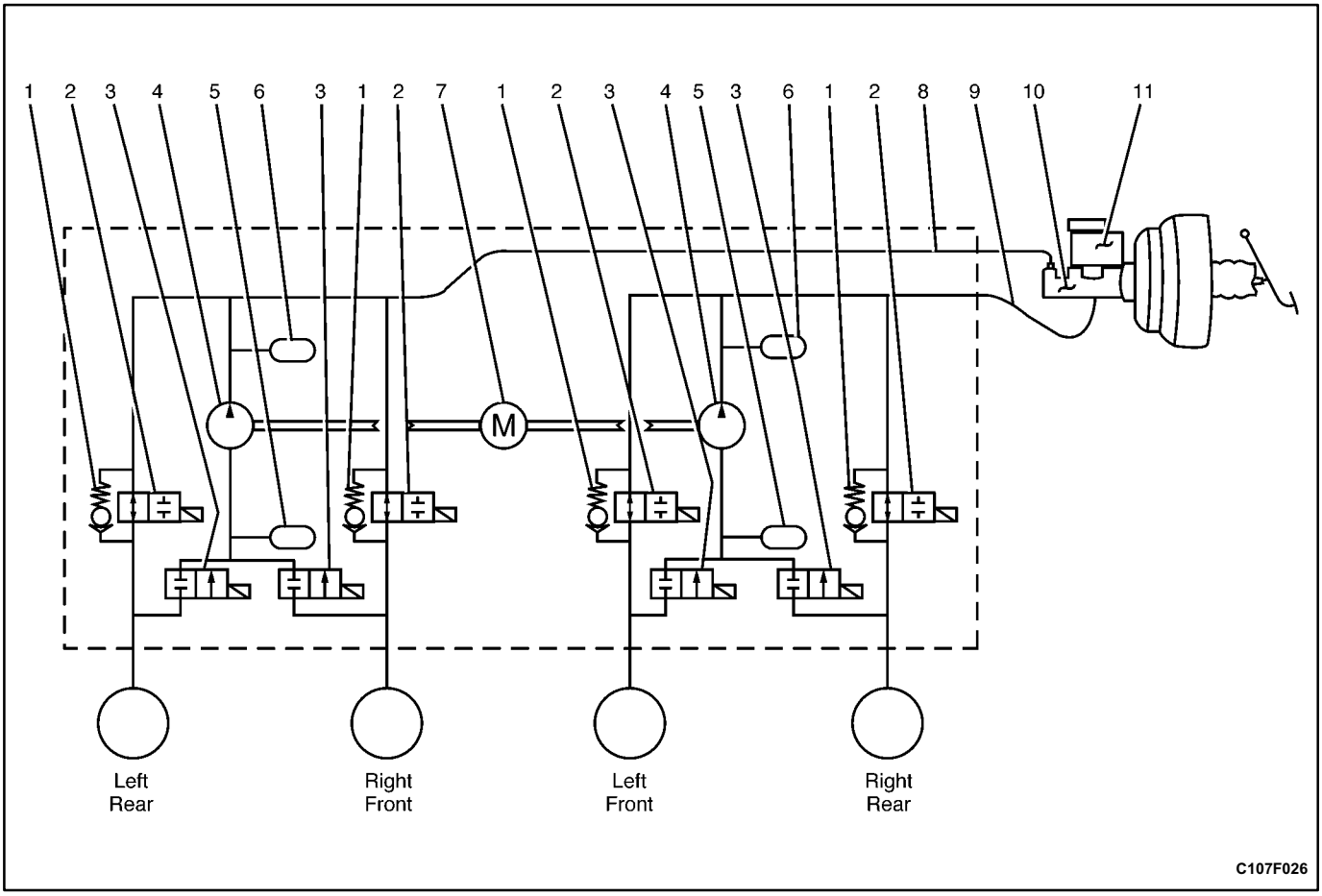

1 Check Valve
2 Inlet Valve
3 Outlet Valve
4 Pump
5 Accumulator
6 Damper
7 Pump Motor
8 Hydraulic Circuit 2
9 Hydraulic Circuit 1
10 Master Cylinder
11 Master Cylinder Reservoir

Units equipped with TCS add two more valves for each drive wheel for the purpose of applying the brake to a wheel that is slipping. This is done with pressure from the hydraulic pump in the unit. There is also a TCS indicator lamp on the instrument panel to alert the driver to the fact that the TCS system is active. The components identified in the drawing are those added to the basic ABS 5.3 system to provide traction control.

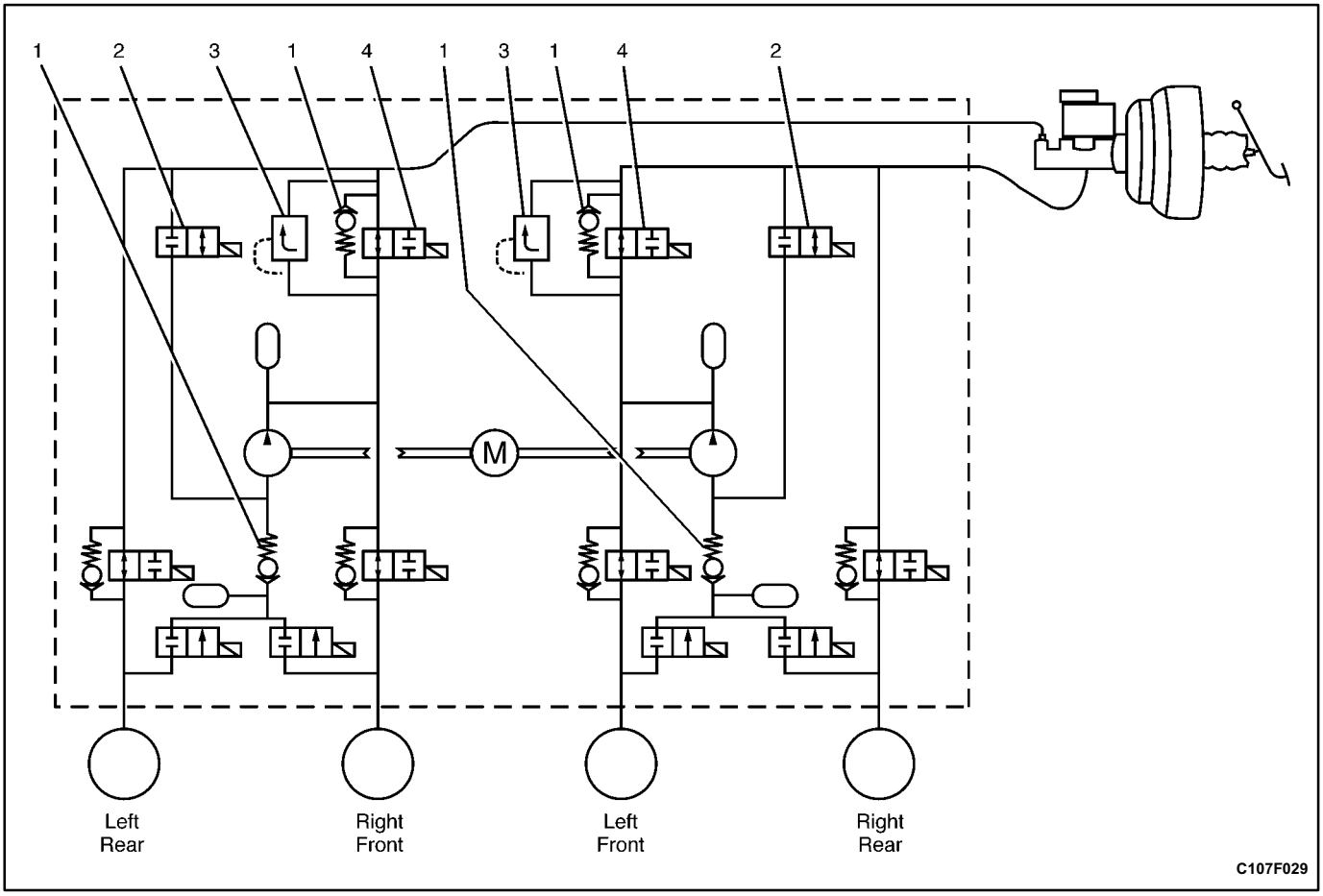

1 Nonreturn Valve
2 Prime Valve
3 Pressure Relief Valve
4 Pilot Valve

Nothing in the hydraulic unit or the EBCM is serviceable. In the event of any failure, the entire ABS unit with attached EBCM must be replaced. For more information, refer to „Base Braking Mode” and „Antilock Braking Mode” in this section.

BASE BRAKING MODE

The baseline braking mode of the ABS 5.3 system used in this vehicle is a diagonal split system. In this system, one master cylinder circuit supplies pressure to the right front and the left rear brakes; the other circuit supplies pressure to the left front and the right rear brakes. All valves in the hydraulic modulator are in their normal, nonenergized positions as shown in the drawings found in „ABS System Components” in this section.

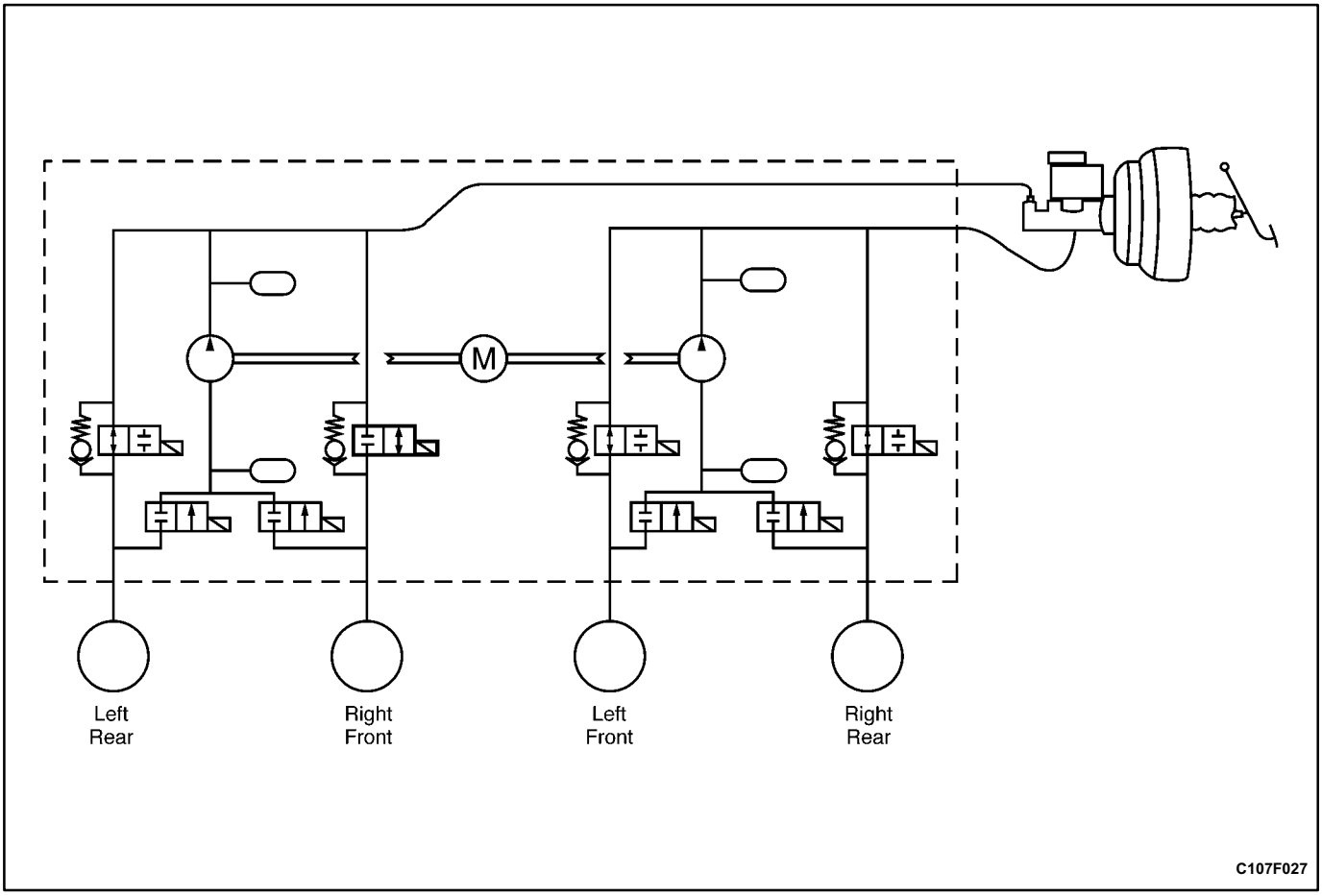

ANTILOCK BRAKING MODE

If a wheel speed sensor detects a wheel locking up, the electronic brake control module (EBCM) closes the normally open inlet valve for the brake on that wheel to prevent adding more hydraulic pressure to that brake. The illustration shows this for the right front brake.

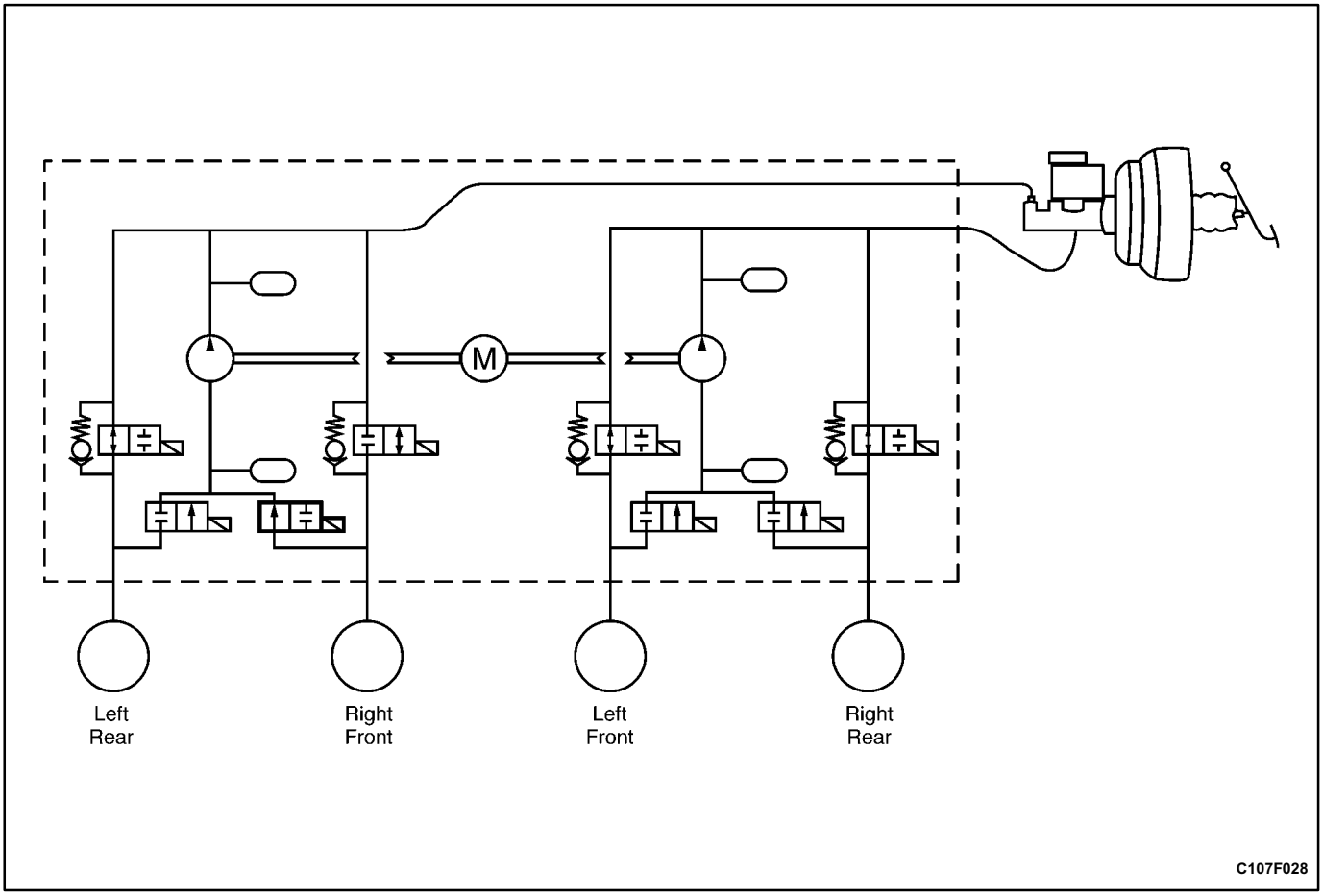

If the wheel locking tendency continues, the EBCM releases the hydraulic pressure at that brake by opening the outlet valve for that wheel.

These inlet and outlet valves at the wheels operate the same way in a TCS system. The additional TCS valves do not operate for the ABS function.

TRACTION CONTROL MODE

The Automatic Brake Differential form of traction control (TCS) used in this system operates by brake application to the drive wheel which is loosing traction. This transfers torque to the wheel that has traction. It is available only at low speed (<40 km/h [25 mph]). When the TCS is active, The TCS indicator lamp in the instrument cluster will be blinking.

The TCS will operate when a wheel speed sensor detects a wheel spin situation with one of the drive wheels. The electronic brake control module (EBCM) closes the normally open pilot valve to isolate the affected drive wheel brake from the master cylinder and from the rear wheel brake channel. The EBCM also turns on the pump and opens the prime valve to apply pressure to the brake at the wheel that is spinning. The following figures show action at the right front wheel only.

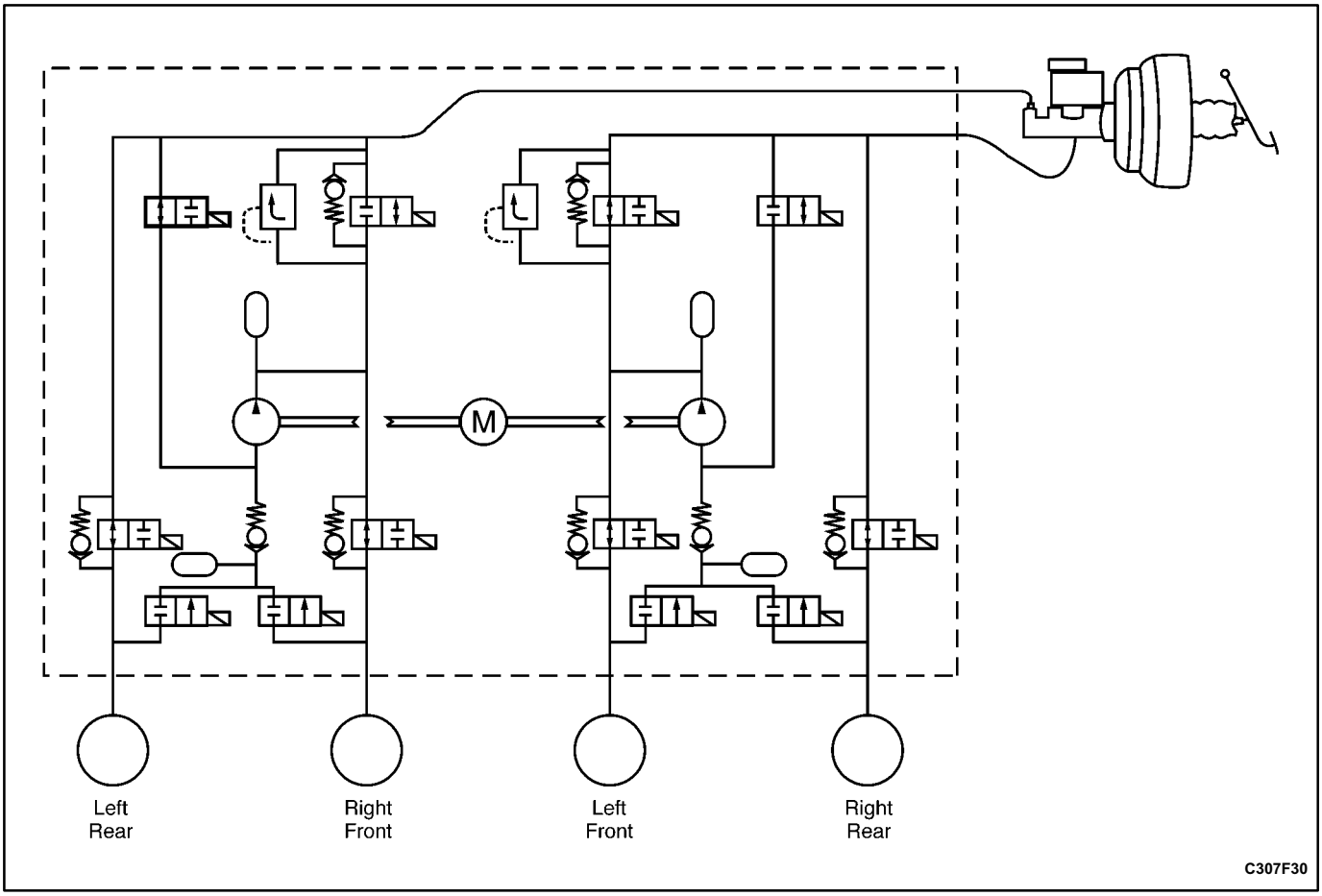

When the wheel spin condition is under control, the EBCM closes the prime valve for the wheel that was spinning to avoid additional braking at that wheel. The pressure relief valves will allow the excess hydraulic fluid being pumped to return to the master cylinder.

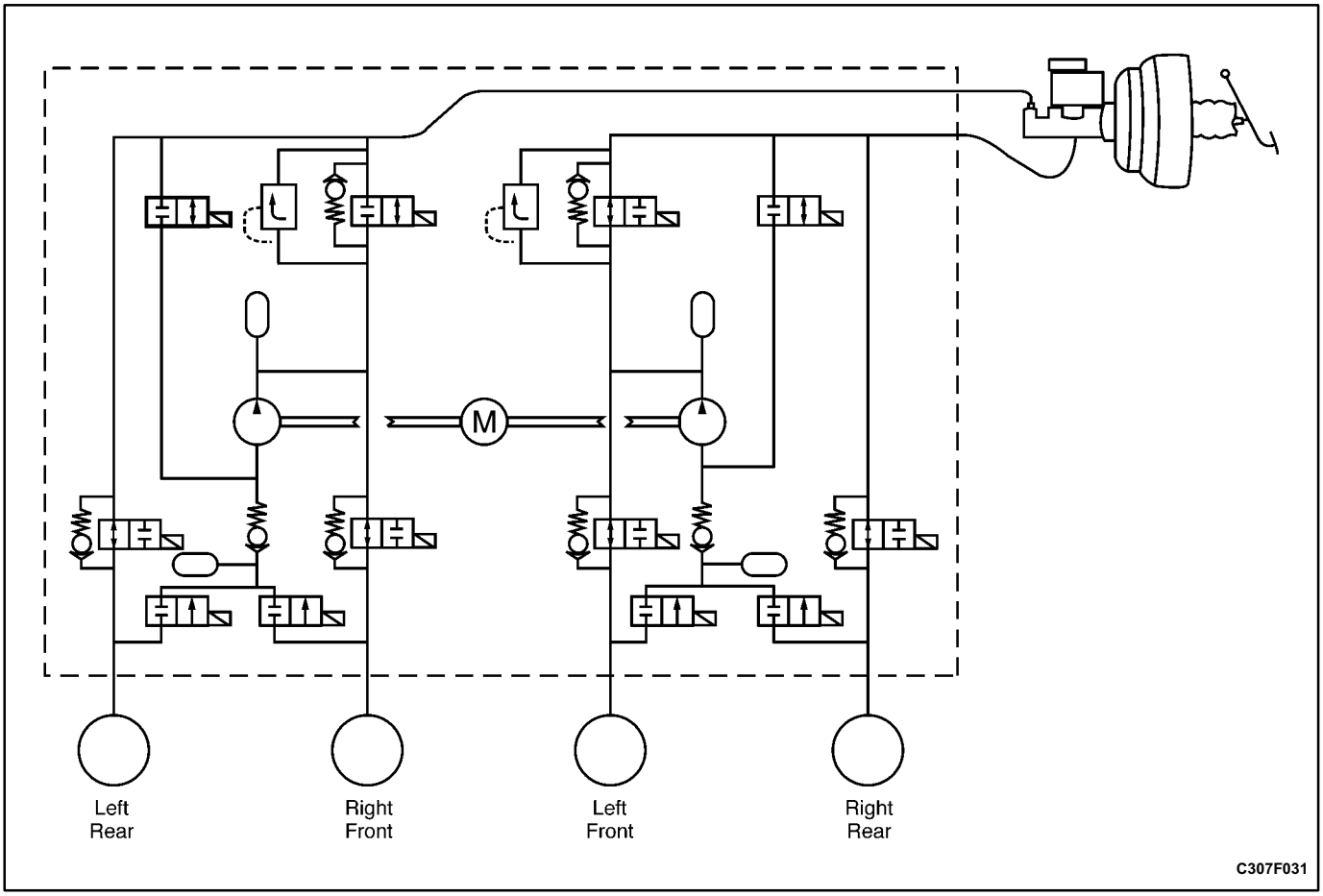

When the wheel speed tendency is no longer detected, the EBCM turns off the pump and opens the pilot valve to release the braking pressure, returning the system to its normal configuration.

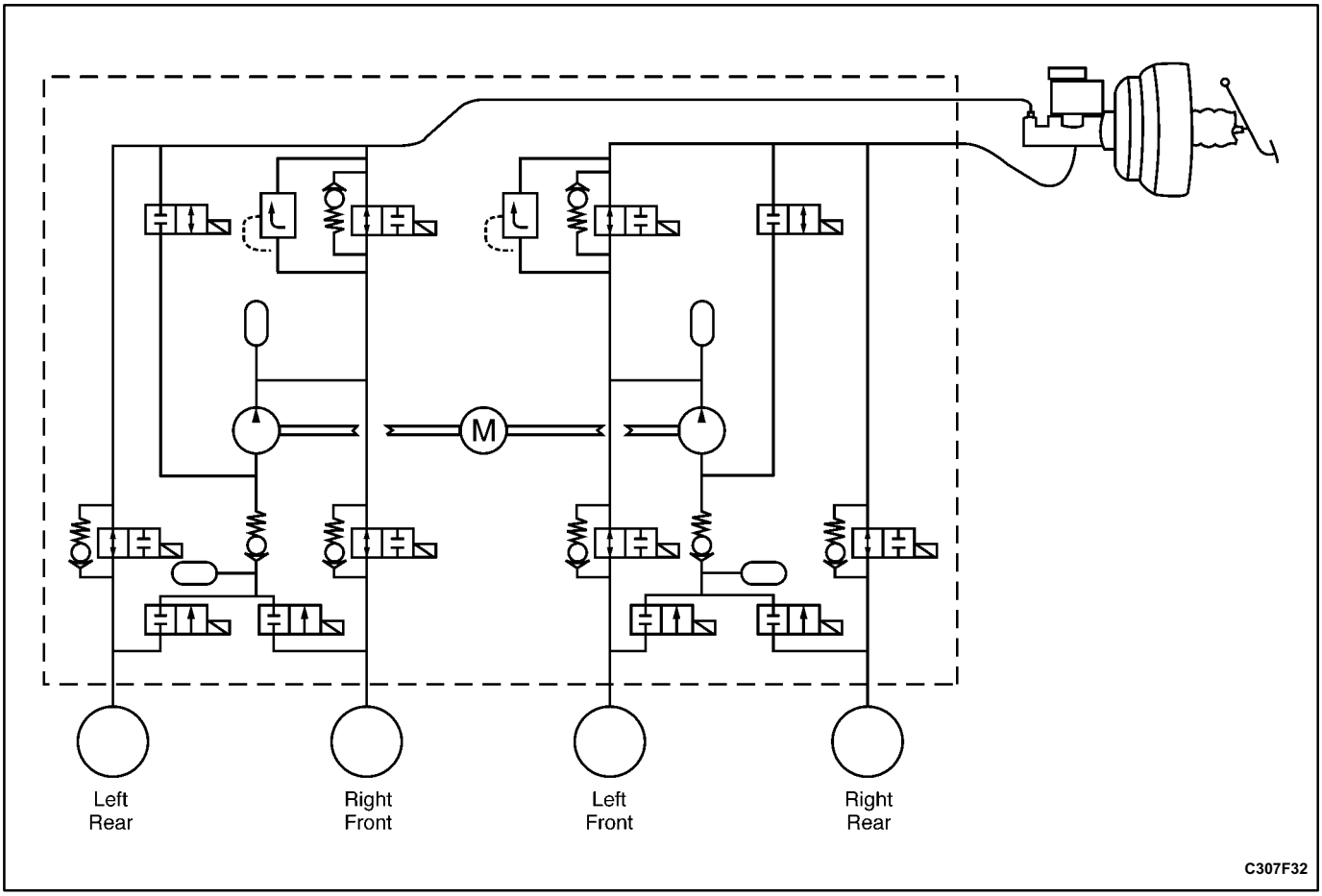

TIRES AND ABS/TCS

Replacement Tires

Tire size is important for proper performance of the ABS/TCS system. Replacement tires should be the same size, load range, and construction as the original tires. Replace tires in axle sets and only with tires of the same tire performance criteria (TPC) specification number. Use of any other size or type may seriously affect the ABS/TCS operation.

ELECTRONIC BRAKE CONTROL MODULE (EBCM)

Notice: There is no serviceable or removable PROM. The EBCM must be replaced as an assembly.

The EBCM is attached to the hydraulic unit in the engine compartment. The controlling element of ABS 5.3 is a microprocessorbased EBCM. Inputs to the system include the four wheel speed sensors, the stoplamp switch, the ignition switch, and the unswitched battery voltage. There is an output to a bidirectional serial data link, located in pin K of the assembly line diagnostic link (ALDL), for service diagnostic tools and assembly plant testing.

The EBCM monitors the speed of each wheel. If any wheel begins to approach lockup and the brake switch is closed (brake pedal depressed), the EBCM controls the solenoids to reduce brake pressure to the wheel approaching lockup. Once the wheel regains traction, brake pressure is increased until the wheel again begins to approach lockup. This cycle repeats until either the vehicle comes to a stop, the brake pedal is released, or no wheels approach lockup.

Additionally, the EBCM monitors itself, each input (except the serial data link), and each output for proper operation. If it detects any system malfunction, the EBCM will store a DTC in nonvolatile memory (DTCs will not disappear if the battery is disconnected). Refer to „Self Diagnostics” in this section for more detailed information.

FRONT WHEEL SPEED SENSORS

The front wheel speed sensors are of a variable reluctance type. Each sensor is attached to the steering knuckle, close to a toothed ring. The result, as teeth pass by the sensor, is an ac voltage with a frequency proportional to the speed of the wheel. The magnitude of the voltage and frequency increase with increasing

speed. The sensor is not repairable, nor is the air gap adjustable.

FRONT WHEEL SPEED SENSOR RINGS

The toothed ring mentioned above is pressed onto the wheelside (outer) constant velocity joint. Each ring contains 48 equally spaced teeth. Exercise care during service procedures to avoid prying or contacting this ring. Excessive contact may cause damage to one or more teeth. If the ring is damaged, the wheelside constant velocity joint must be replaced.

REAR WHEEL SPEED SENSORS AND RINGS

The rear wheel speed sensors operate in the same manner as the front wheel speed sensors. They incorporate a length of flexible harness with the connector attached to the end of the harness. The rear wheel speed rings are incorporated into the hub assemblies and cannot be replaced separately, but require replacement of the rear hub/bearing assembly.

VALVE RELAY AND PUMP MOTOR RELAY

The valve relay and the motor pump relay are located inside the electronic brake control module (EBCM) and are not replaceable. If one should fail, replace the EBCM.

WIRING HARNESS

The wiring harness is the mechanism by which the electronic brake control module (EBCM) is electrically connected to power and to ground, to the wheel speed sensors, the fuses, the switches, the indicators, and the serial communications port. The components, considered part of the wiring harness, are the wires that provide electrical interconnection, and connectors (terminals, pins, contacts, or lugs) that provide an electrical/mechanical interface from the wire to a system component.

INDICATORS

The electronic brake control module (EBCM) continuously monitors itself and the other ABS components. If the EBCM detects a problem with the system, the amber ABS indicator will light continuously to alert the driver to the problem. An illuminated ABS indicator indicates that the ABS system has detected a problem that affects the operation of ABS. No antilock braking will be available. Normal, nonantilock brake performance will remain. In order to regain ABS braking ability, the ABS must be serviced.

The red BRAKE indicator will be illuminated when the system detects a low brake fluid level in the master cylinder or when the parking brake switch is closed (the parking brake is engaged).

When the vehicle is equipped with traction control (TCS), there is also a TCS indicator which the EBCM will illuminate when the traction control system is active.

SECTION 4G

PARKING BRAKE

TABLE OF CONTENTS

Specifications 4G-1
Fastener Tightening Specifications 4G-1
Maintenance and Repair 4G-2
On-Vehicle Service 4G-2
Parking Brake Adjustment - Rear Disc Brakes 4G-2
Parking Brake Lever 4G-3
Parking Brake Cable 4G-6
Parking Brake Handle 4G-10
General Description and System Operation 4G-12
Parking Brake 4G-12

SPECIFICATIONS

FASTENER TIGHTENING SPECIFICATIONS

Application	N•m	Lb•Ft	Lb•In
Front Muffler Heat Shield Nuts	2.5	-	22
Keyless Entry Receiver Screws	10	-	89
Parking Brake Cable Bracket to Trailing Link Bracket Nuts	90	66	-
Parking Brake Cable Console Mounting Bracket Nuts	25	18	-
Parking Brake Cable Nut	12	-	106
Parking Brake Lever Assembly to Vehicle Underbody Bolts	20	15	-
Parking Brake Switch to Parking Brake Lever Screw	4	-	35

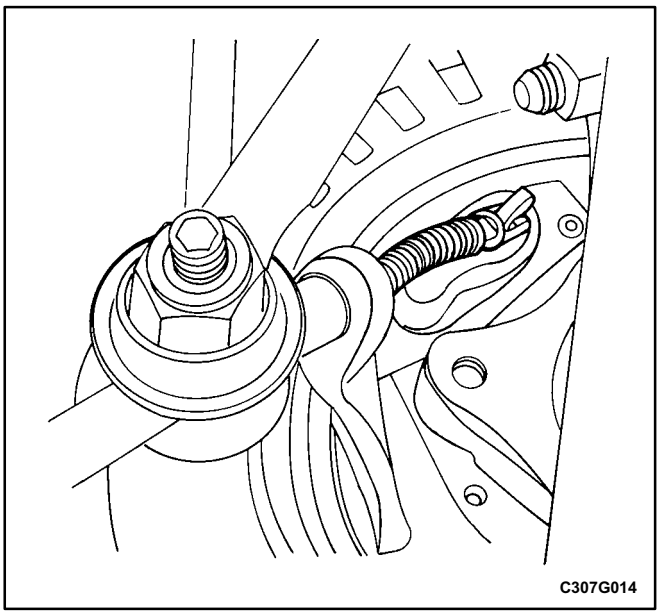

MAINTENANCE AND REPAIR

ON-VEHICLE SERVICE

PARKING BRAKE ADJUSTMENT - REAR DISC BRAKES

Adjustment Procedure

1. Release the parking brake.
2. Raise and suitably support the vehicle.
3. Remove the rear wheels. Refer to *Section 2E, Tires and Wheels*.
4. Remove the caliper and rotor assemblies. Refer to *Section 4E, Rear Disc Brakes*.
5. Disconnect the parking brake cable from the backplate operating lever on each side of the vehicle.

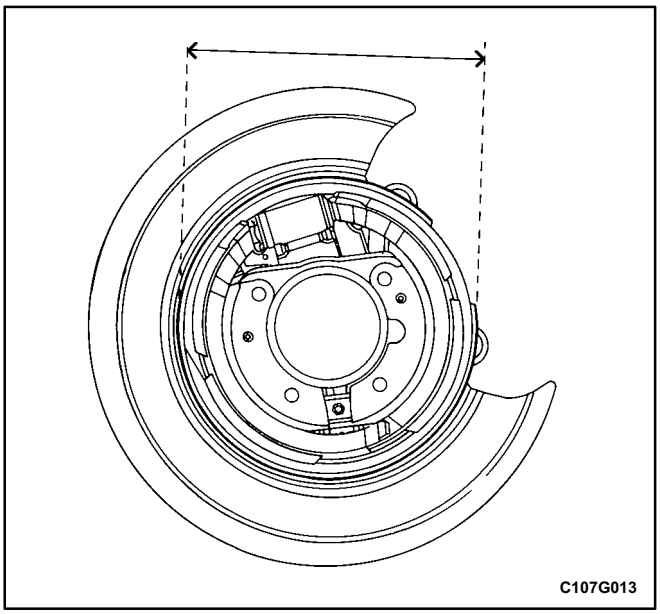

6. Inspect and replace any parts of doubtful strength or quality because of discoloration from heat or stress.
7. Using a vernier caliper, adjust the shoe assembly to 167.6 to 167.8 mm (6.60 to 6.61 inches) by turning the adjuster nut clockwise to increase the diameter.

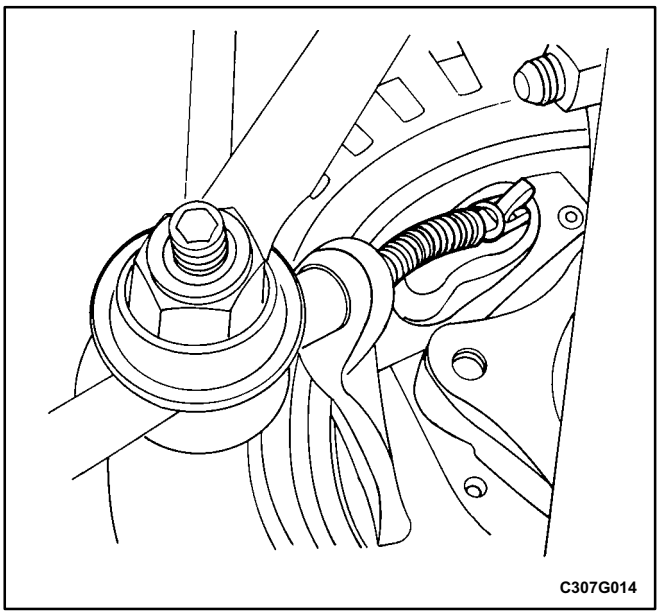

8. Install the caliper and rotor assemblies. Refer to *Section 4E, Rear Disc Brakes*.
9. Install the rear wheels. Refer to *Section 2E, Tires and Wheels*.
10. Install the parking brake cable to the backplate lever on each side of the vehicle.
11. In the vehicle cabin, pull on the parking brake handle and stop after hearing two clicks.
12. Turn the rear wheel by hand until the wheel begins to drag.
13. Release the parking brake.
14. Turn the rear wheel by hand to check drag and readjust the cable, if necessary.
15. Repeat the process for the other rear wheel and lower the vehicle.

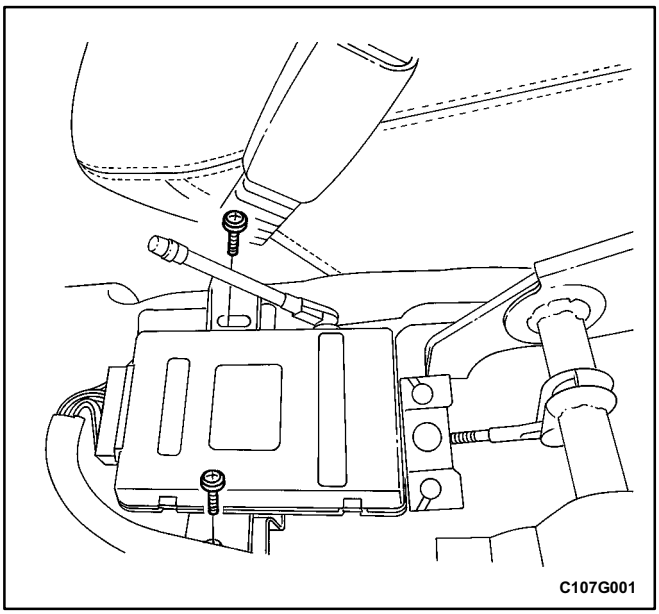

PARKING BRAKE LEVER

Removal Procedure

1. Release the parking brake.
2. Remove the parking brake/gearshift console hood. Refer to *Section 9G, Interior Trim*.
3. If necessary, remove the screws and washers securing the keyless entry receiver to the underbody bracket.

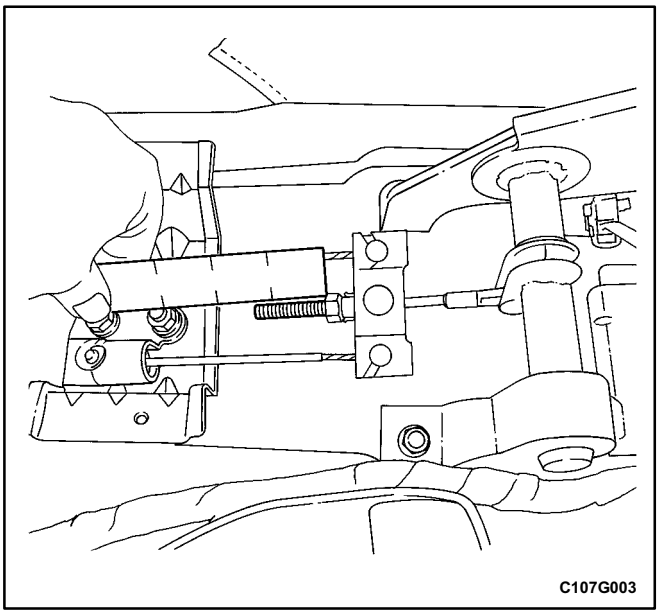

4. Measure the thread length from the end of the pull rod to the hex nut.

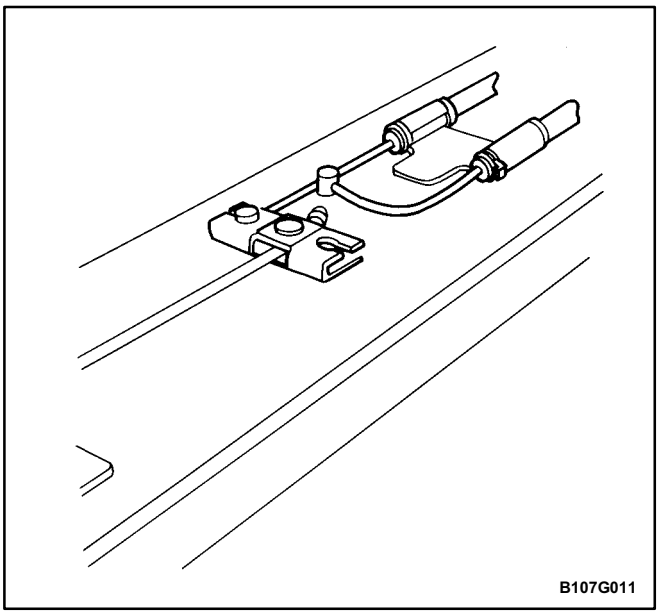

5. Loosen the parking brake adjustment nut from the eye bolt pull rod of the parking brake lever assembly.
6. Remove the parking brake cable ends from the equalizer.

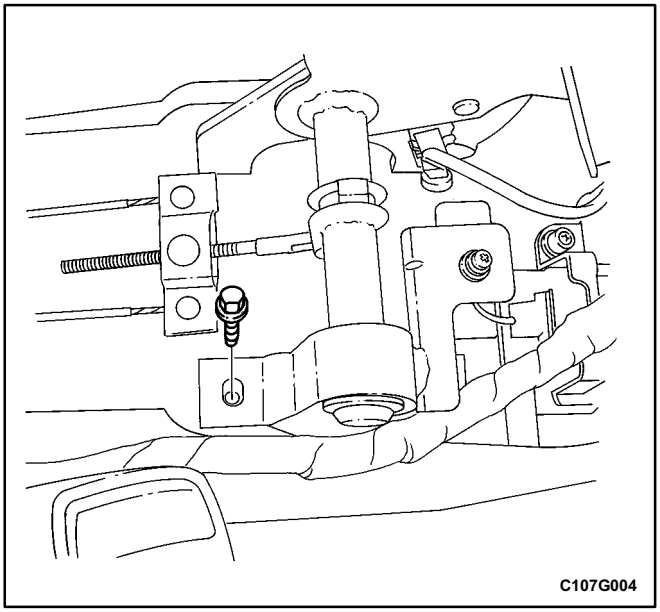

7. Remove the bolts and washers which secure the complete parking brake lever assembly to the underbody.

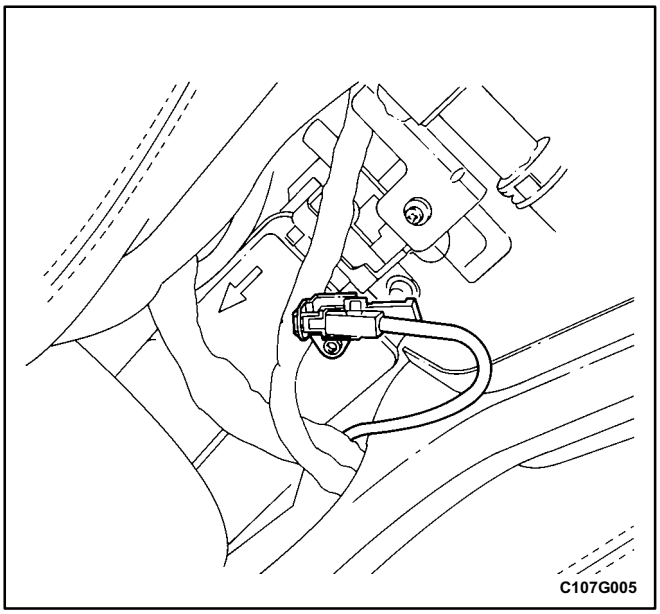

Notice: The parking brake switch should be replaced if the BRAKE warning light in the instrument panel cluster did not glow when the parking brake was applied with the ignition switch ON.

8. If necessary, remove the parking brake switch attached to the parking brake lever assembly by a small screw, and remove the switch.

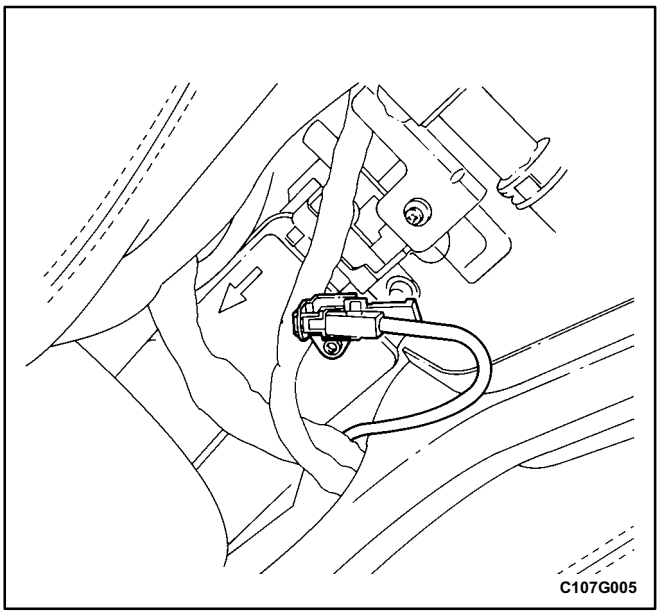

Installation Procedure

Notice: If the parking brake lever is bent or damaged, replace the complete parking brake lever assembly.

1. If necessary, fasten the parking brake switch to the parking brake lever assembly with the screw.

   ### Tighten

   Tighten the parking brake switch to parking brake lever screw to 4 N•m (35 lb•in).

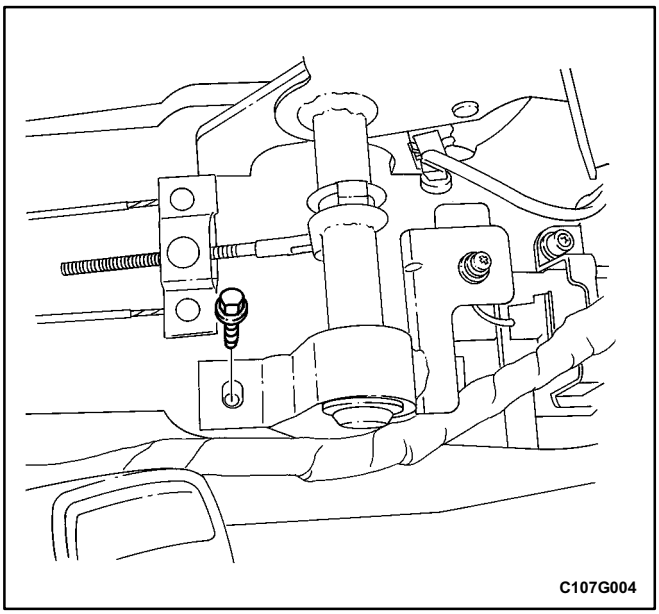

2. Install the parking brake lever bolts, and fasten the parking brake lever assembly to the vehicle underbody.

Tighten

Tighten the parking brake lever assembly to vehicle underbody bolts to 20 N•m (15 lb•ft).

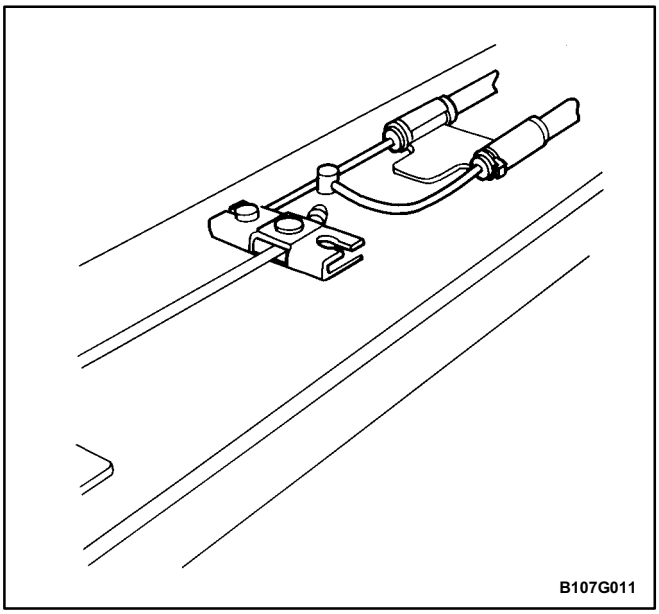

3. Connect the parking brake cable ends to the equalizer.
4. Check the parking brake adjustment by referring to the original removal adjustment nut measurement taken in the removal procedure. Refer to „Parking Brake Adjustment" in this section.

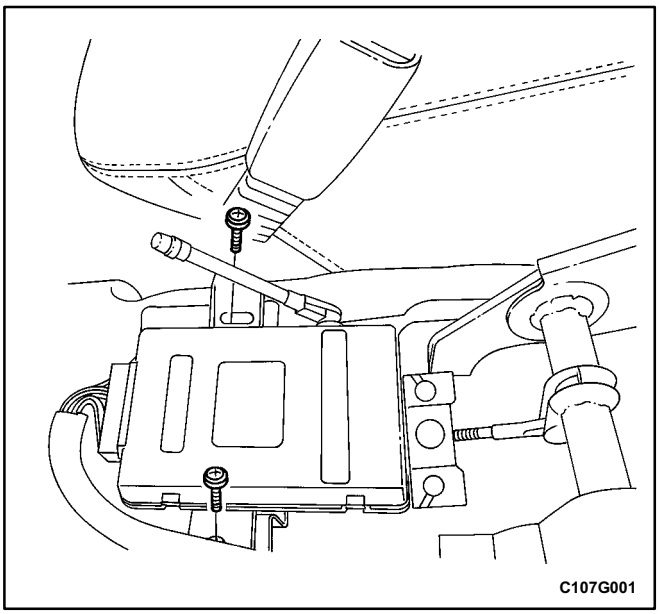

5. If necessary, install the screws and washers securing the keyless entry receiver to the underbody bracket.

Tighten

Tighten the screws of the keyless entry receiver to 10 N•m (89 lb•in).

6. Install the parking brake/gearshift console hood. Refer to *Section 9G, Interior Trim*.

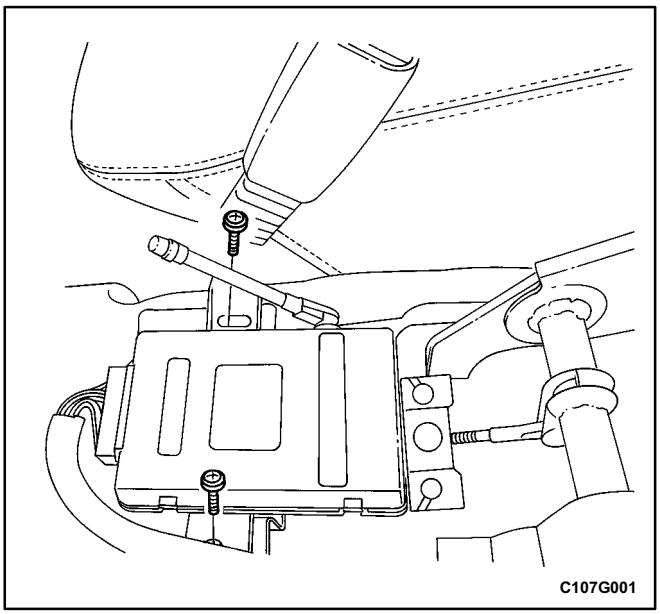

PARKING BRAKE CABLE

Removal Procedure

1. Remove the parking brake/gearshift console hood. Refer to *Section 9G, Interior Trim*.
2. If necessary, remove the screws and washers that secure the keyless entry receiver to the body bracket.

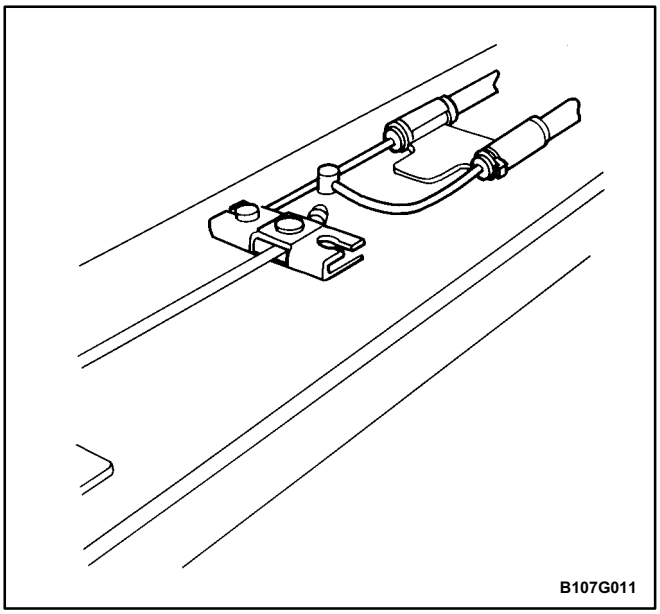

3. Loosen the parking brake adjustment nut from the eyebolt pull rod of the parking brake lever assembly.
4. Remove the parking brake cable ends from the equalizer, and remove the equalizer.

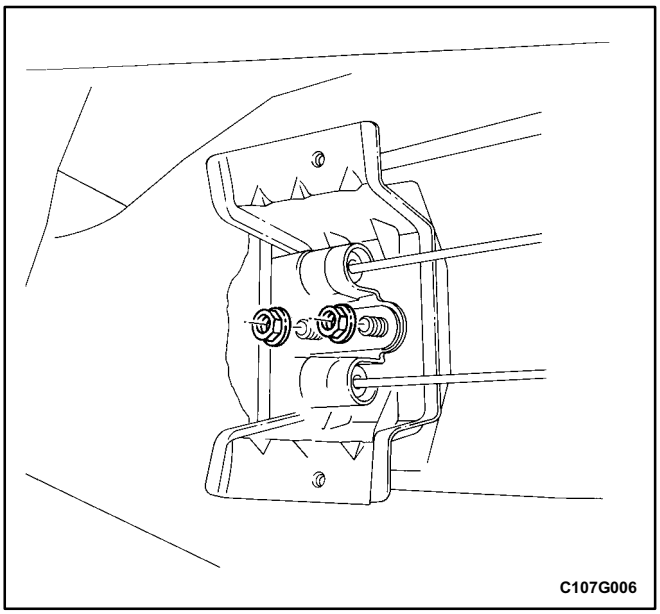

5. Remove the nuts that secure the parking brake cable to the console underbody mounting bracket.
6. Raise and suitably support the vehicle.
7. Remove the rear wheels. Refer to *Section 2E, Tires and Wheels.*

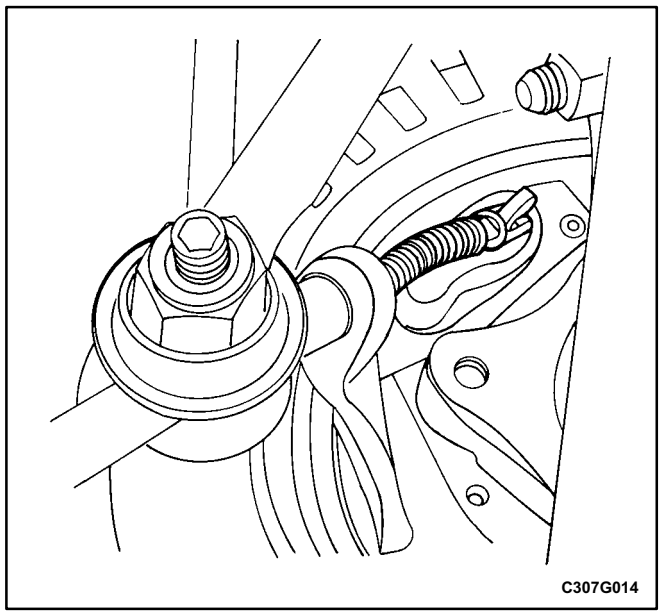

8. Unfasten the parking brake cable from the lever at the rear of the backing plate.
9. Remove the clip that holds the cable into the protruding hole on the rear knuckle assembly.

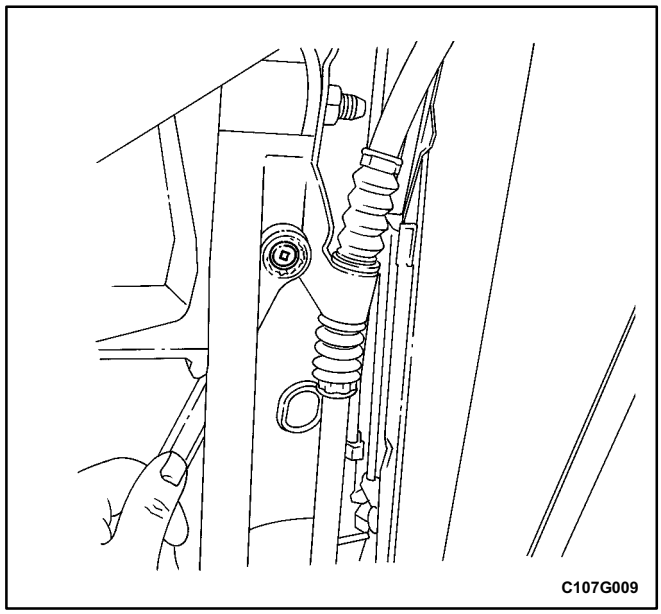

10. Remove the bolt securing the parking brake cable to a holding bracket attached to the trailing link brackets on both the driver and passenger sides of the vehicle.

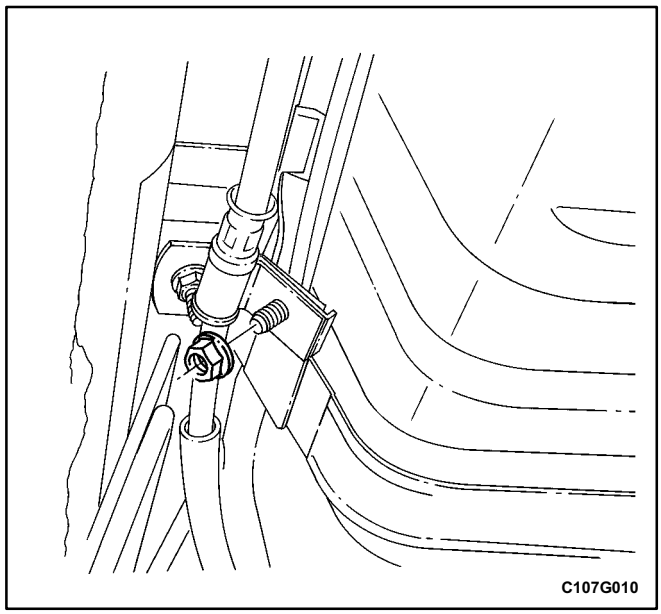

11. Remove the nut that secures the parking brake cable to the bracket near the fuel tank strap (passenger and driver side).

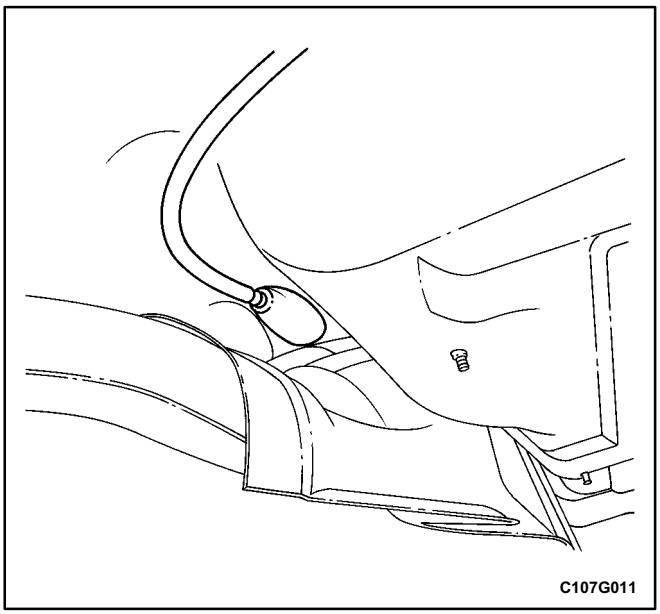

12. Remove the front muffler heat shield nuts, and let the shield rest on the front muffler.
13. Pull out each parking brake cable (and rubber grommet) from its underbody access to the parking brake/gearshift console.

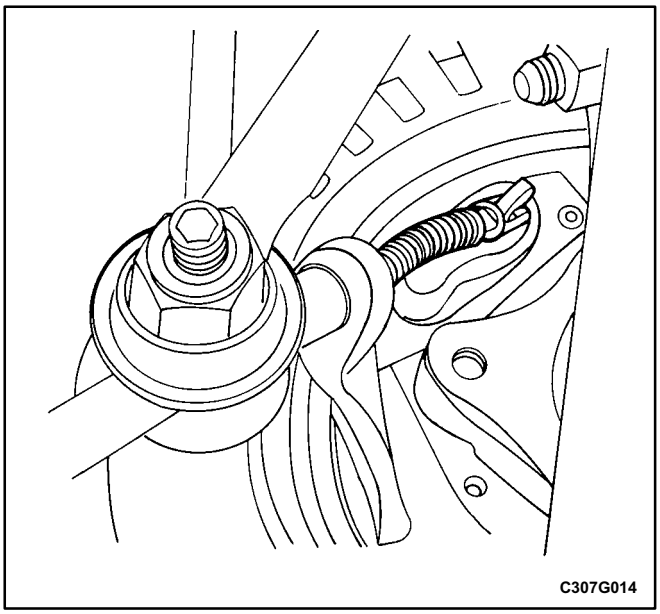

Installation Procedure

1. Route the parking brake cable to the protruding hole on the rear knuckle assembly.
2. Fasten the parking brake cable to the lever at the rear of the disc brake backing plate.
3. Install the clip that secures the parking brake cable to the protruding hole on the rear knuckle assembly.

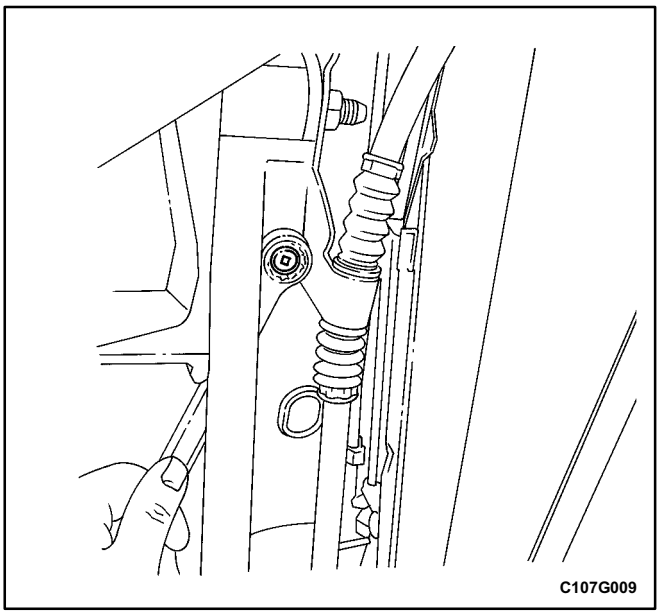

4. Install the bolt securing the parking brake cable to a holding bracket attached to the trailing link bracket on both the driver and passenger sides of the vehicle.

Tighten

Tighten the parking brake cable bracket to trailing link bracket nuts to 90 N•m (66 lb•ft).

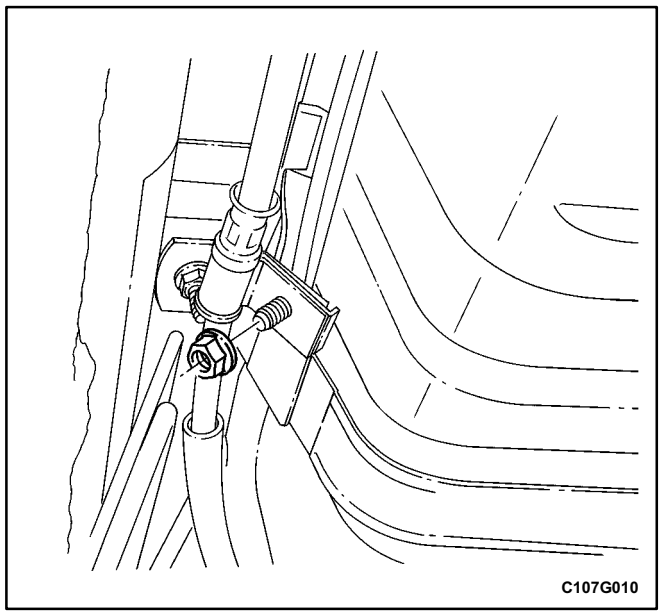

5. Install the nut that secures the parking brake cable to the bracket near the fuel tank strap (passenger and driver side).

Tighten

Tighten the parking brake cable nut to 12 N•m (106 lb•in).

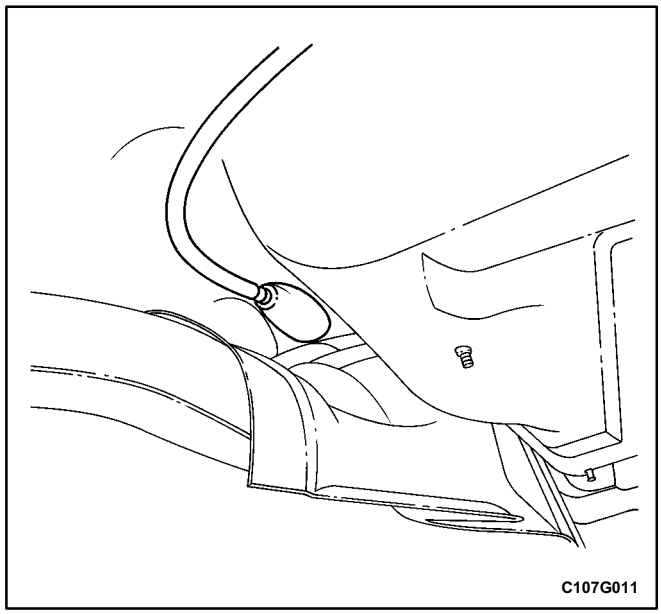

6. Route the parking brake cables through the access holes to the parking brake/gearshift console.
7. Install the rubber grommet for each cable.
8. Install the front muffler heat shield.

Tighten

Tighten the front muffler heat shield nuts to 2.5 N•m (22 lb•in).

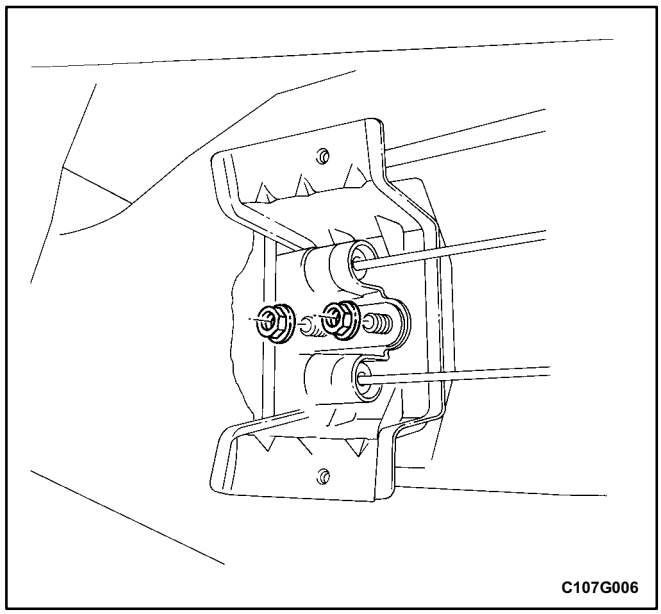

9. Route the parking brake cable through the console to underbody mounting bracket and secure the bracket with the nuts.

Tighten

Tighten the parking brake cable console mounting bracket nuts to 25 N•m (18 lb•ft).

10. Install the rear wheels. Refer to *Section 2E, Tires and Wheels*.
11. Lower the vehicle.

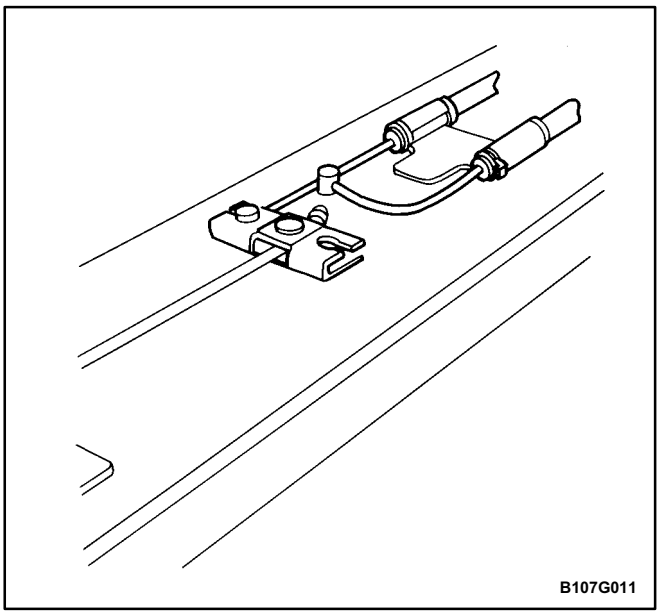

12. Attach the parking brake cable ends to the equalizer.

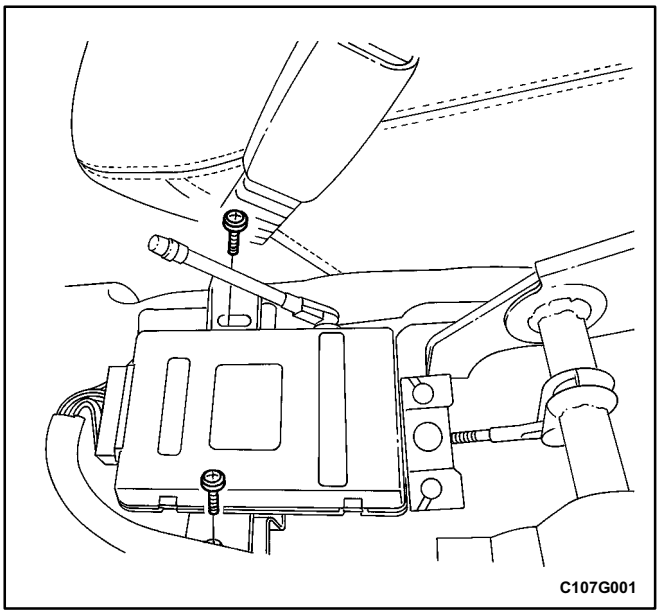

13. Install the parking brake/gearshift console hood. Refer to *Section 9G, Interior Trim*.
14. Adjust the parking brake. Refer to „Parking Brake Adjustment" in this section.
15. Install the screws and washers securing the keyless entry receiver to the underbody bracket.

Tighten

Tighten the keyless entry receiver screws to 10 N•m (89 lb•in).

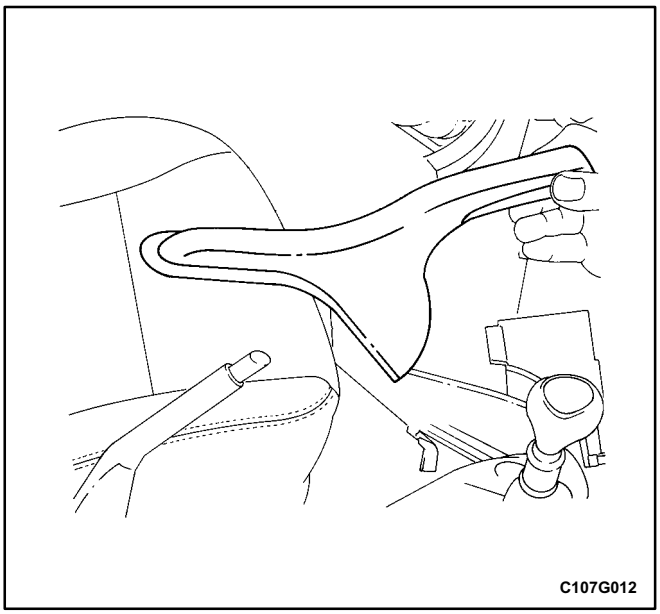

PARKING BRAKE HANDLE

Removal Procedure

1. Remove the parking brake/gearshift console hood. Refer to *Section 9G, Interior Trim*.
2. Slip the parking brake handle off of the parking brake lever.

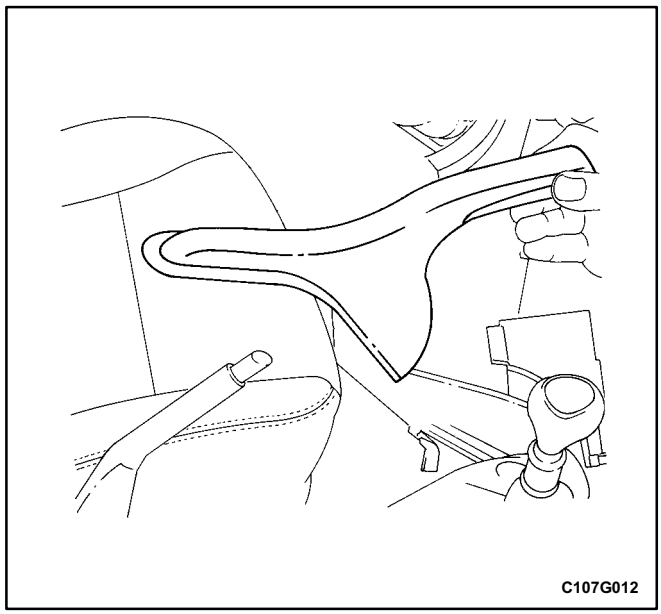

Installation Procedure

1. Push the parking brake handle as far as it will go on the parking brake lever.
2. Install the parking brake/gearshift console hood. Refer to *Section 9G, Interior Trim*.

GENERAL DESCRIPTION AND SYSTEM OPERATION

PARKING BRAKE

This braking system uses a BRAKE warning light located in the instrument panel cluster. When the ignition switch is in the START position, the BRAKE warning light should glow and go OFF when the the ignition switch returns to the RUN position. Whenever the parking brake is applied and the ignition switch is ON, the BRAKE warning light should glow.

When the brake is firmly applied, the parking brake should hold the vehicle with ample pedal travel remaining. Check for frayed cables, rust, etc. or any condition that many inhibit present (or future) free movement of the parking brake lever assembly.

TRANSMISSION/TRANSAXLE

CONTENTS

SECTION 5A2 ZF 4 HP 14 AUTOMATIC TRANSAXLE

SECTION 5A3 AISIN 50–40LE AUTOMATIC TRANSAXLE

SECTION 5B FIVE–SPEED MANUAL TRANSAXLE

SECTION 5C CLUTCH

SECTION 5A2

CAUTION: Disconnect the negative battery cable before removing or installing any electrical unit or when a tool or equipment could easily come in contact with exposed electrical terminals. Disconnecting this cable will help prevent personal injury and damage to the vehicle. The ignition must also be in LOCK unless otherwise noted.

ZF 4 HP 14 AUTOMATIC TRANSAXLE

TABLE OF CONTENTS

Specifications 5A2-4
Transaxle Specifications 5A2-4
Line Pressure 5A2-4
Fluid Level Set After Service 5A2-4
Range Reference Chart 5A2-5
Fastener Tightening Specifications 5A2-5
Special Tools 5A2-7
Special Tools Table 5A2-7
Schematic and Routing Diagrams 5A2-10
Position P – Park 5A2-10
Position R – Reverse, Idling 5A2-11
Position N – Neutral 5A2-12
Position D – First Gear, Idling 5A2-13
Position D – First Gear, Fully Accelerated . . . 5A2-14
Position D – First Gear, Kickdown 5A2-15
Position D – Second Gear, Idling 5A2-16
Position D – Second Gear, Fully Accelerated 5A2-17
Position D – Second Gear, Kickdown 5A2-18
Position D – Third Gear, Idling 5A2-19
Position D – Third Gear, Fully Accelerated . . 5A2-20
Position D – Third Gear, Kickdown 5A2-21
Position D – Fourth Gear, Idling 5A2-22
Position D – Fourth Gear, Fully Accelerated 5A2-23
Position D – Fourth Gear, Kickdown 5A2-24
Position 3 – Third Gear, Idling 5A2-25
Position 3 – Third Gear, Fully Accelerated . . 5A2-26
Position 3 – Third Gear, Kickdown 5A2-27
Position 2 – Third Gear, Idling 5A2-28
Position 2 – Second Gear, Fully Accelerated 5A2-29
Position 1 – Third Gear, Idling 5A2-30
Position 1 – Second Gear, Idling 5A2-31
Position 1 – First Gear, Fully Accelerated . . . 5A2-32
Component Locator 5A2-33
ZF 4 HP 14 Automatic Transaxle 5A2-33
Diagnosis 5A2-35
Symptom Diagnosis 5A2-35
Preliminary Checks 5A2-35
Position P – Park Position Does Not Engage or Slips 5A2-35
Position P – Engine Does Not Start 5A2-35
Position P – No Shift to Reverse 5A2-35
Position P – Shift Occurs Without Engaging Brake Pedal 5A2-36
Position R – No Reverse 5A2-36
Position R – Slipping or Vibration When Moving Off 5A2-36
Position R – Hard Engaging Jerk or Double Jerk 5A2-36
Position R – Reversing Lamp Does Not Come On 5A2-36
Position N – Engine Does Not Start 5A2-37
Position N – Vehicle Moves or Creeps Forward 5A2-37
Position D – No Power 5A2-37
Position D – No Shift From Either First to Second or Second to First 5A2-37
Position D – No Shift From First to Second Only 5A2-37
Position D – No Shift From Either Second to Third or Third to Second 5A2-38
Position D – No Shift From Second to Third Only 5A2-38
Position D – No Shift From Either Third to Fourth or Fourth to Third 5A2-38
Position D – No Shift From Third to Fourth Only 5A2-38
Position D – Vehicle Moves Off in Second . . 5A2-39
Position D – Vehicle Moves Off in Third 5A2-39
Position D – Vehicle Shifts From First to Third 5A2-39
Position D – Vehicle Shifts From First to Fourth 5A2-39
Position D – Zero Load Shift Not OK 5A2-39
Position D – Full Load Shift Points Not OK . . 5A2-40
Position D – No Kickdown Shift From Second to First 5A2-40

Position D – No Kickdown Shift From Third to Second 5A2-40
Position D – No Kickdown Shift From Fourth to Third 5A2-40
Position D – Zero Load Shifts Too Hard 5A2-40
Position D – Full Load and Kickdown Shift Takes Too Long 5A2-40
Position D – Full Load and Kickdown Shift Is Too Hard 5A2-40
Position D – Engine Speed Too High When Shifting From Third to Fourth 5A2-41
Position D – Engine Speed Too High When Shifting From Fourth to Third 5A2-41
Position 2 – Manual Downshift Not OK 5A2-41
Position 2 – No Engine Braking Action 5A2-41
Position 1 – Manual Downshift From Second to First Not OK 5A2-41
Position 1 – No Engine Braking Action 5A2-42
Accelerator Cable Jams 5A2-42
Slipping or Vibration When Moving Off 5A2-42
Hard Engaging Jerk From Neutral to Drive . . 5A2-42
Noisy Operation and Sluggish Engagement After Long Trip 5A2-42
No Positive Engagement Forward or Reverse, Loud Noises 5A2-42
Noises in All Positions 5A2-43
Intake Noises From Fluid Pump 5A2-43
Noises Vary According to Speed 5A2-43
Leak Diagnosis 5A2-44
Line Pressure Check Procedure 5A2-44
Locating Fluid Leaks 5A2-45
Fluid Drips Out of Converter Bell Housing . . . 5A2-45
Leak Between Transaxle Housing and Converter Bell Housing 5A2-45
Leak Between Transaxle Housing and Fluid Pan 5A2-45
Leak Between Transaxle Housing and Side Cover 5A2-45
Leak at Fluid Cooler 5A2-46
Leak at Cover of Brake C′ 5A2-46
Leak at Brake Band C′ Adjusting Bolt 5A2-46
Leak at Retaining Bolts for Side Shaft Bearing Ring 5A2-46
Leak at Accelerator Cable Connector 5A2-46
Leak at Differential 5A2-46
Leak at Differential Extension 5A2-47
Leak at Speedometer Drive 5A2-47
Leak at Breather 5A2-47
Leak at Selector Shaft 5A2-47
Maintenance and Repair 5A2-48
On-Vehicle Service 5A2-48
Transaxle Fluid Level Checking Procedure . . 5A2-48
Changing Fluid 5A2-48
Fluid Filter and Seal 5A2-49
Case Porosity Repair 5A2-50
Fluid Cooler Flushing 5A2-50
Shift Control Lever 5A2-50
Shift Control Cable 5A2-56
Control Cable Adjustment 5A2-60
Throttle Valve Cable 5A2-61
Adjuct Throttle Valve Cable 5A2-63
Throttle Valve Cable Cam 5A2-63
Neutral Start Switch 5A2-64
Brake Transaxle Shift Interlock 5A2-66
Fluid Filler Tube 5A2-66
Speed Sensor 5A2-68
Pan and Gasket 5A2-70
Case Side Cover Pan and Gasket 5A2-71
Case Extension Housing 5A2-71
Drive Axle Fluid Seals 5A2-73
Fluid Cooler Pipes and Hoses 5A2-74
Transaxle Left Mount 5A2-77
Transaxle Left Bracket 5A2-80
Transaxle Center Bracket 5A2-80
Transaxle Assembly 5A2-81
Unit Repair 5A2-86
Transaxle Center Mount 5A2-86
Major Component Disassembly 5A2-87
Brake C′ 5A2-100
Intermediate Plate With Brake C and Pump 5A2-105
Clutch B With Freewheel Second Gear 5A2-112
Clutch A 5A2-117
Clutch E 5A2-122
Output Shaft and Freewheel First Gear 5A2-125
Side Shaft and Governor 5A2-129
Housing 5A2-132
Differential 5A2-134
Small Spur Gear 5A2-137
Park System Components 5A2-138
Valve Body 5A2-145
Clutch A and Brake D Housing 5A2-153
Lower Valve Housing 5A2-156
Valve Housing 5A2-162
Major Component Assembly 5A2-172
General Description and System Operation 5A2-190
ZF 4 HP 14 Automatic Transaxle 5A2-190
Torque Converter 5A2-190
Fluid Pump 5A2-190
Planetary Gears 5A2-190
Control Elements 5A2-191
Power Flow 5A2-192

Parking Brake 5A2-193
Hydraulic Control System 5A2-193
Centrifugal Governor 5A2-194

SPECIFICATIONS

TRANSAXLE SPECIFICATIONS

Transaxle Capacity	
Input Torque	100-270 N•m (74-199 lb-ft)
Maximum Torque Multiplication of the Different Torque Converters	1.9-2.5
Torque Converter Diameter	260 mm (10.2 in.)
Ratios	
First Gear	2.412
Second Gear	1.369
Third GearMaximum	1.000
Fourth Gear	0.739
Reverse	2.828
Measurements	
Weight of Transaxle	55 kg (121.3 lb)
Weight of Torque Converter	10.5 kg (23.15 lb)
Fluid Capacity	5.4L (5.6 qts)
Automatic Transaxle Fluid	Dexron®–IID, III or Mercon®– M

LINE PRESSURE

Idle	at P, N, O, 3, 2, 1 range	7 ~ 10 kg/cm^2 (995 ~ 1,421 psi)
	at R range	10 ~ 12 kg/cm^2 (1,421 ~ 1,706 psi)
Stall	at D range	10 ~ 13 kg/cm^2 (1,421 ~ 1,848 psi)
	at R range	10 ~ 12 kg/cm^2 (2,274 ~ 2,843 psi)

FLUID LEVEL SET AFTER SERVICE

Repair	Amount of Fluid to Add After Repair
Bottom Pan Removal/Installation/Replacement	2.5L (2.6 qts)
New Converter Installation	2L (2.1 qts)
Complete Overhaul	5.4L (5.6 qts)

Important: Make sure to maintain the proper fluid level in the transaxle. After each repair or service procedure, add the amount of fluid specified and then check to confirm that the transaxle contains the appropriate fluid level. See “Transaxle Fluid Level Checking Procedure” in this section.

RANGE REFERENCE CHART

Application			P	R	N	D				3			2		1
			Parking	Reverse	Neutral	1st	2nd	3rd	4th	1st	2nd	3rd	1st	2nd	1st
Clutch	A	Forward Clutch				○	○	○		○	○	○	○	○	○
	B	2nd Clutch		○											
	E	Direct Clutch						○	○			○			
Brake	C	2nd Brake					○	○	○		○	○		○	
	C'	2nd/4th Brake					○		○		○			○	
	D	Lo/Reverse Brake		○											○
Free Wheel	No. 1					○				○			○		(○)
	No. 2						○				○			○	

FASTENER TIGHTENING SPECIFICATIONS

Application	N•m	Lb-Ft	Lb-In
Band C′ Adjusting Bolt	10	–	89
Band C′ Locking Nut	80	59	–
Bell Housing Bolts	23	17	–
Bell Housing-to-Engine Lower Bolts	75	55	–
Bell Housing-to-Engine Upper Bolts	75	55	–
Case Extension Housing Attachment Bolts	43	32	–
Clutch A and Brake D Housing Attachment Bolts	8	–	71
Cooler Pipe-to-Radiator Fastener Bolt	25	18	–
Cooler Pipe-to-Radiator Nuts	22	16	–
Cooler Pipe-to-Transaxle Case Bolts	22	16	–
Cooler Pipe-to-Transaxle Case Fastener Bolt	25	18	–
Coolant Surge Tank Mounting Bolts	25	18	–
Counterweight Bolt	10	–	89
Differential Adjustment Tool	7	–	62
Fluid Filter Housing Cover Attaching Bolts	8	–	71
Fluid Pan Connecting Bolts	10	–	89
Fluid Pan Drain Plug	15	11	–
Governor Housing Bolts	10	–	89
Grooved Nut	50	37	–
Intermediate Plate-to-Housing Bolts	10	–	89
Intermediate Plate-to-Pump Assembly Connecting Bolts	10	–	89
Large Spur Gear Securing Bolt	150	110	–

Fastener Tightening Specifications (Cont'd)

Application	N•m	Lb-Ft	Lb-In
Lower Cover Attachment Bolts	8	–	71
Lower Fluid Filler Tube Attachment Nut	15	11	–
Lower Valve Housing Attachment Bolts	8	–	71
Lower Valve Housing Exterior Cover Bolts	8	–	71
Lower Valve Housing Interior Cover Bolts	8	–	71
Neutral Start Switch Connecting Nut	40	30	–
Shift Control Cable Attachment Nut	6	–	53
Shift Control Cable Adjuster Pinch Bolt Nut	8	–	71
Shift Control Cable Mounting Bracket Nuts	6	–	53
Shift Interlock Solenoid Bolts	8	–	71
Shuttle Valve Cover Attachment Bolts	8	–	71
Side Cover Pan Connecting Bolts	10	–	89
Side Shaft Outer Ring Securing Bolts	20	15	–
Small Spur Gear Securing Bolt (First Torque)	10	–	89
Small Spur Gear Securing Bolt (Second Torque)	20	15	–
Spring Plate Detent Screws	10	–	89
Throttle Valve Cable Cam Detent Screw	10	–	89
Torque Converter-to-Flywheel Bolts	60	44	–
Transaxle Center Bracket-to-Engine Bolt	90	66	–
Transaxle Center Bracket-to-Transaxle Bolts	90	66	–
Transaxle Center Mount-to-Center Member Bolts	65	48	–
Transaxle Left Bracket Connecting Bolts	48	35	–
Transaxle Left Mount-to-Body Connecting Bolts	58	43	–
Transaxle Left Mount-to-Transaxle Left Bracket Connecting Bolt	48	35	–
Upper Fluid Filler Tube Attachment Bolt	20	15	–
Valve Body Bolts	8	–	71
Valve Housing Control Valve Side Cover Attachment Bolts	8	–	71
Valve Housing Damper Valve Side Cover Attachment Bolts	8	–	71

SPECIAL TOOLS

SPECIAL TOOLS TABLE

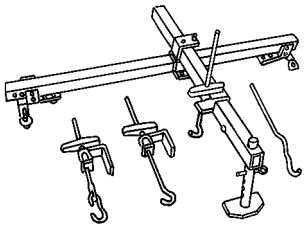 A102B152	**J-28467-B Engine Support Fixture**
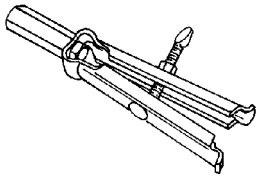 B103A220	**J29369-1 Ring Puller**
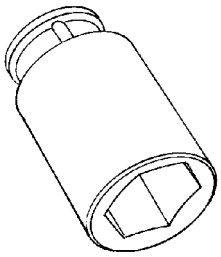 B103A221	**KA-001-023 (KA-023) Bolt Remover**
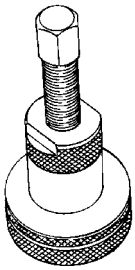 B103A213	**KA-001-060 (KA-060) Bearing Remover**
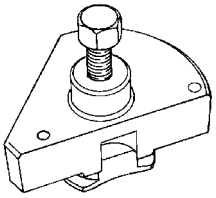 B103A216	**KA-002-088 (KA-088) Differential Adjustment Tool**
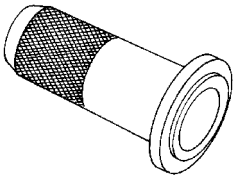 B103A207	**KA-002-111 (KA-111) Bearing Race Installer**
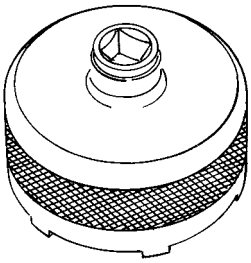 B103A222	**KA-000-155 (KA-155) Grooved Nut Socket**
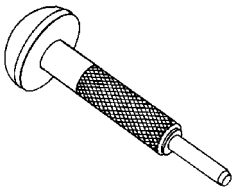 B103A217	**KA-000-187 (KA-187) Seal Ring Punch**

SPECIAL TOOLS TABLE (Cont'd)

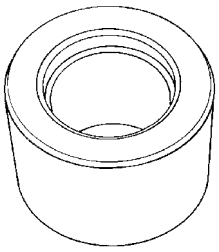 B103A212	**KA-000-232 (KA-232) Bearing Remover**
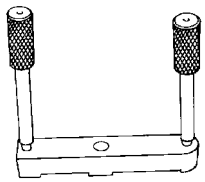 B103A210	**KA-000-287 (KA-287) Securing Device**
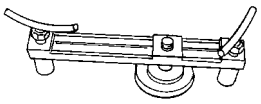 B103A219	**KA-000-288 (KA-288) Side Shaft Retainer**
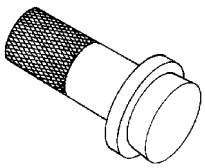 B103A209	**KA-000-298 (KA-298) Bearing Ring Remover/Installer**

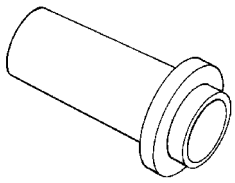 B103A208	**KA-000-299 (KA-299) Seal Ring Installer**
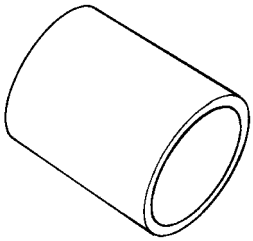 B103A223	**KA-000-300 (KA-300) Bearing Installer**
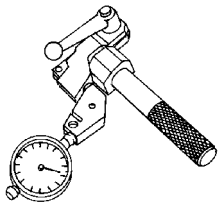 B103A211	**KA-001-483 (KA-483) Axial Clearance Measurement Tool**
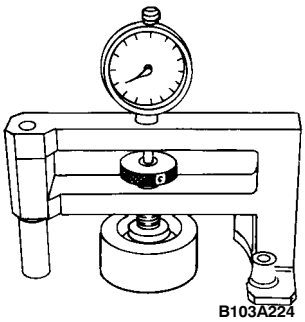 B103A224	**KA-001-655 (KA-655) Spur Gear Clearance Measurement Tool**

SPECIAL TOOLS TABLE (Cont'd)

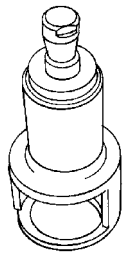 B103A215	**KA-001-715-04 (KA-715-04) Bearing Remover**
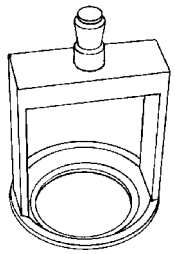 B103A214	**KA-000-913 (KA-913) Compression Adapter**

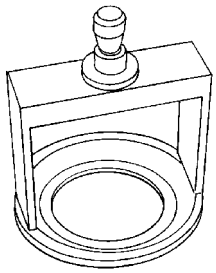 B103A218	**KA-000-914 (KA-914) Compression Adapter**

SCHEMATIC AND ROUTING DIAGRAMS

POSITION P – PARK

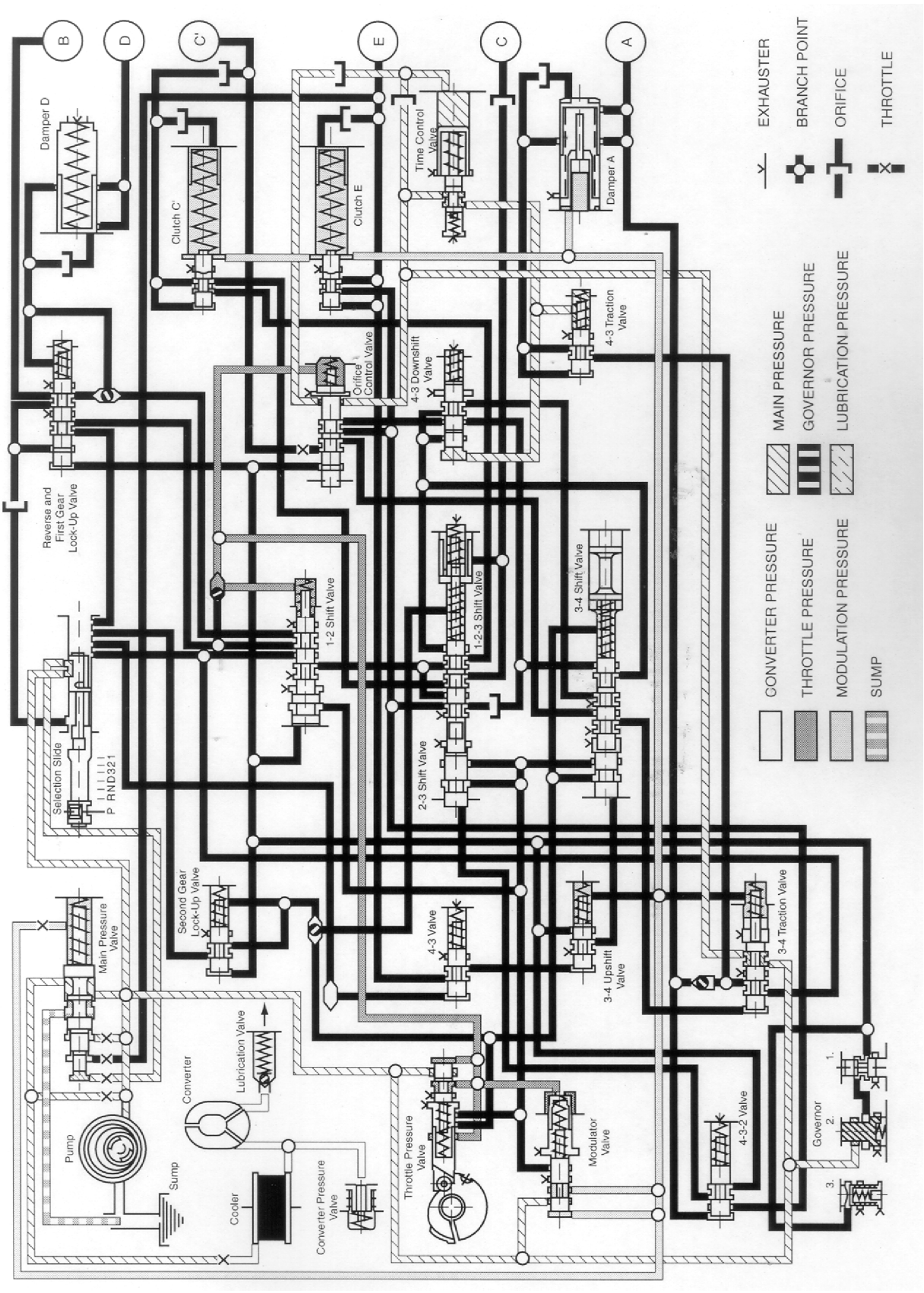

B103A312

POSITION R – REVERSE, IDLING

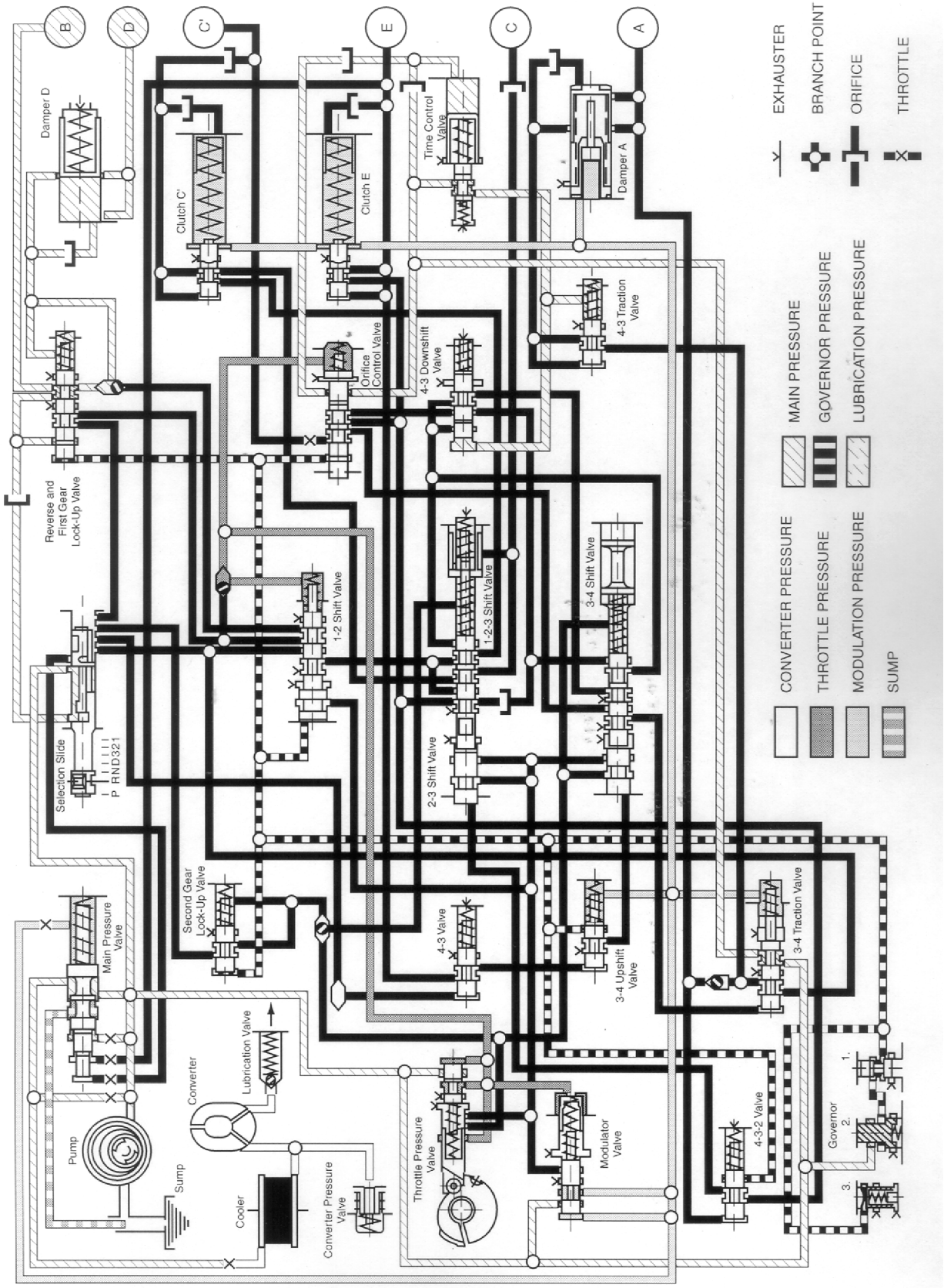

B103A311

POSITION N – NEUTRAL

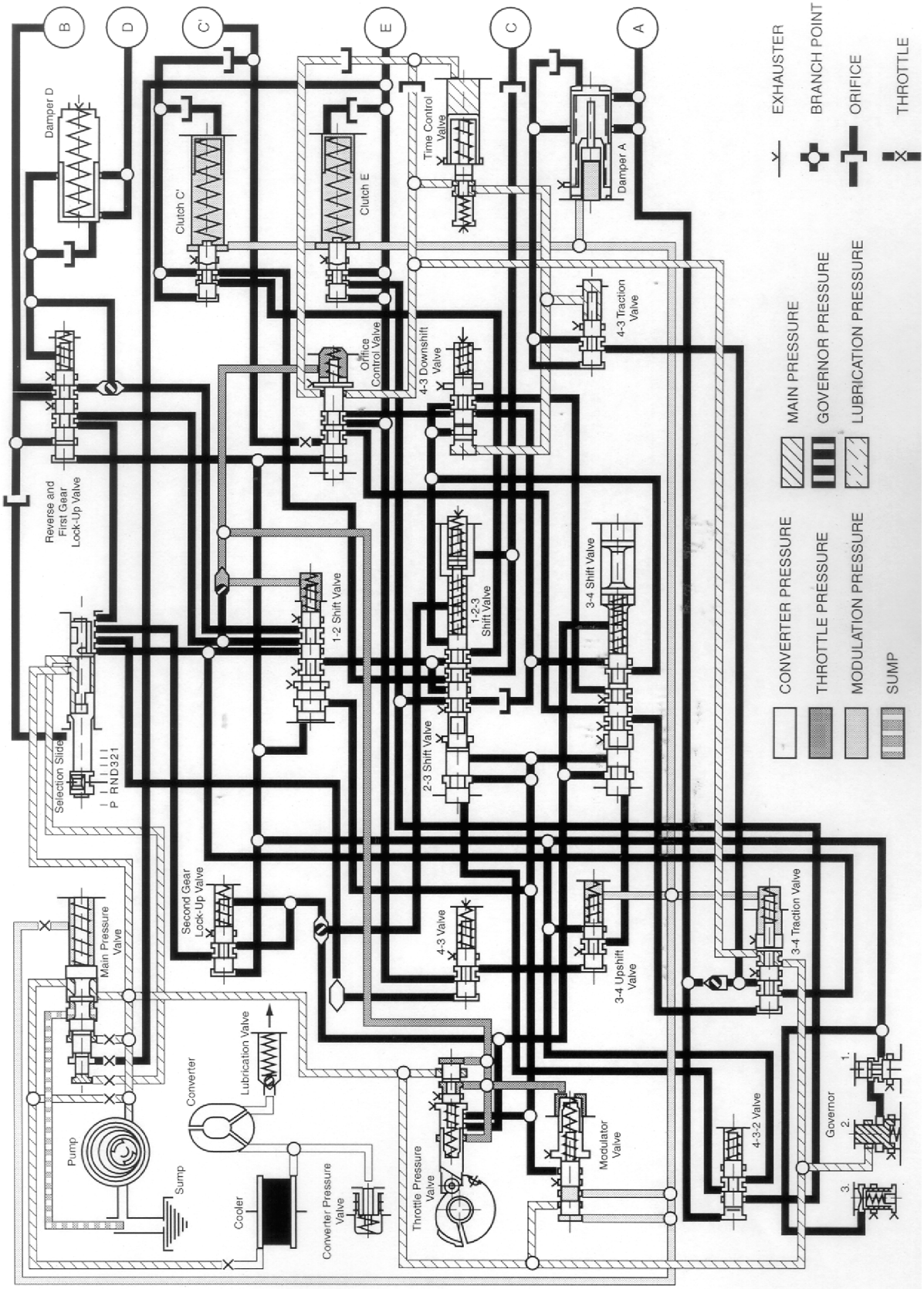

B103A310

POSITION D – FIRST GEAR, IDLING

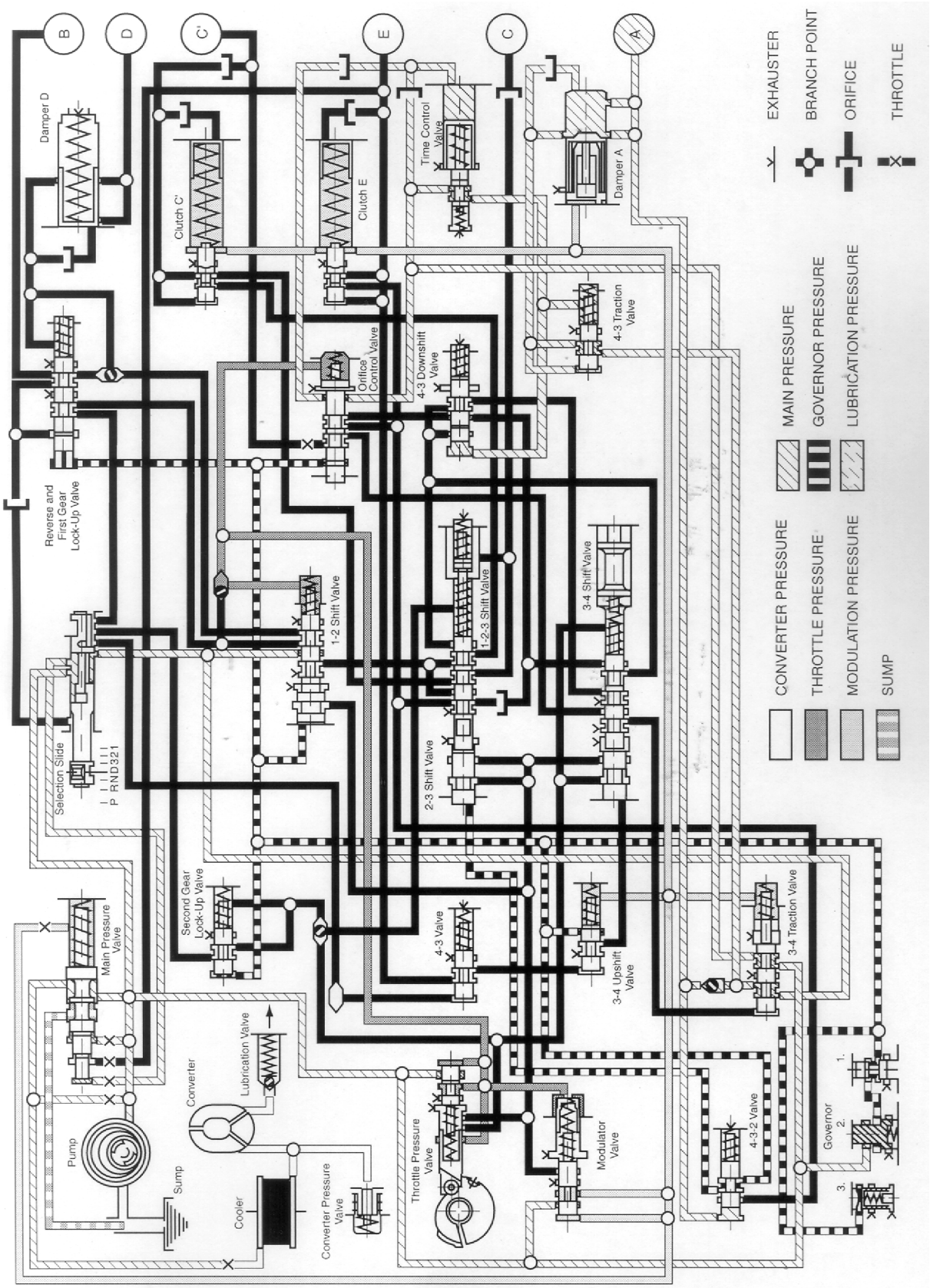

B103A313

POSITION D – FIRST GEAR, FULLY ACCELERATED

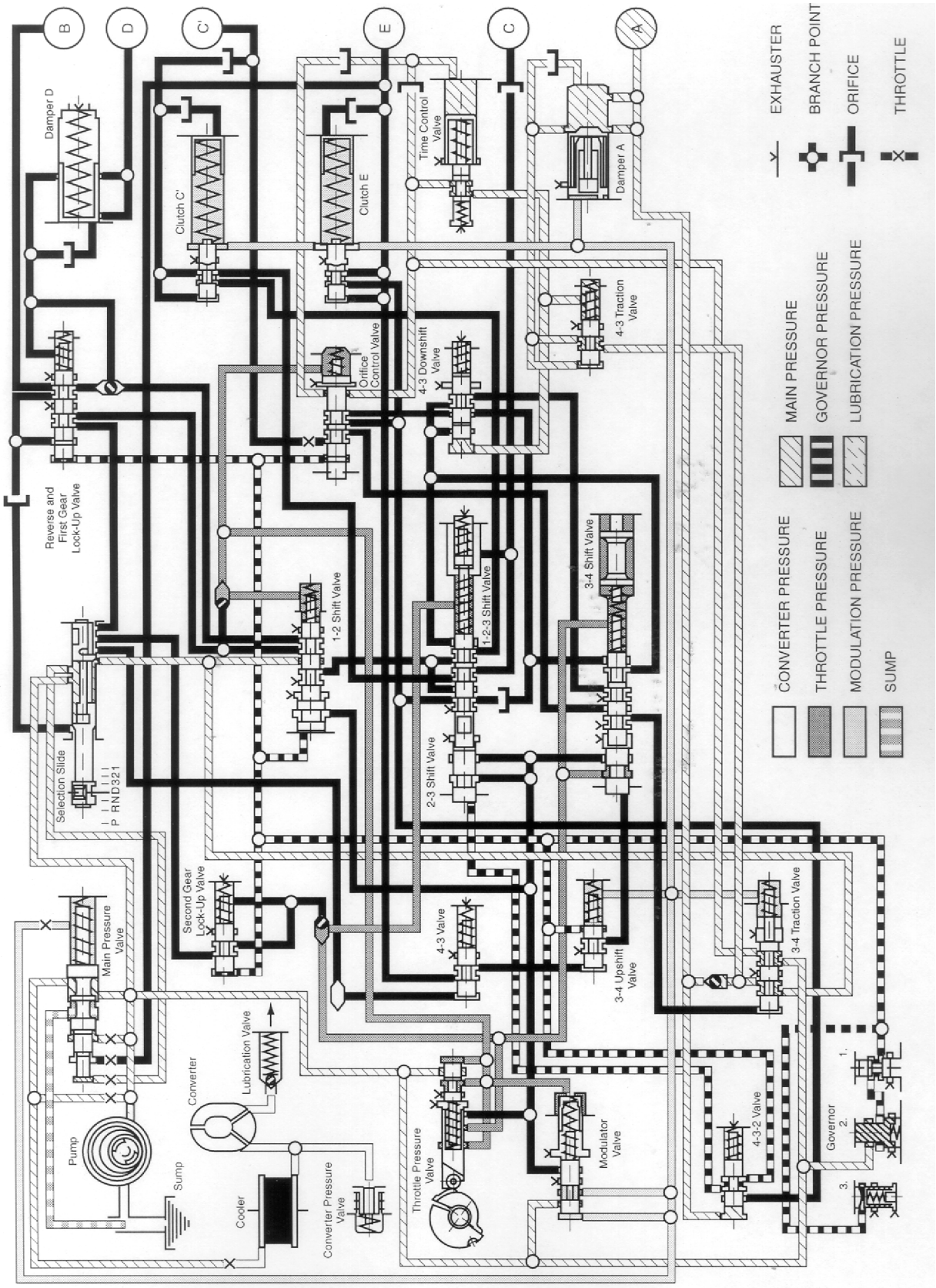

B103A314

POSITION D – FIRST GEAR, KICKDOWN

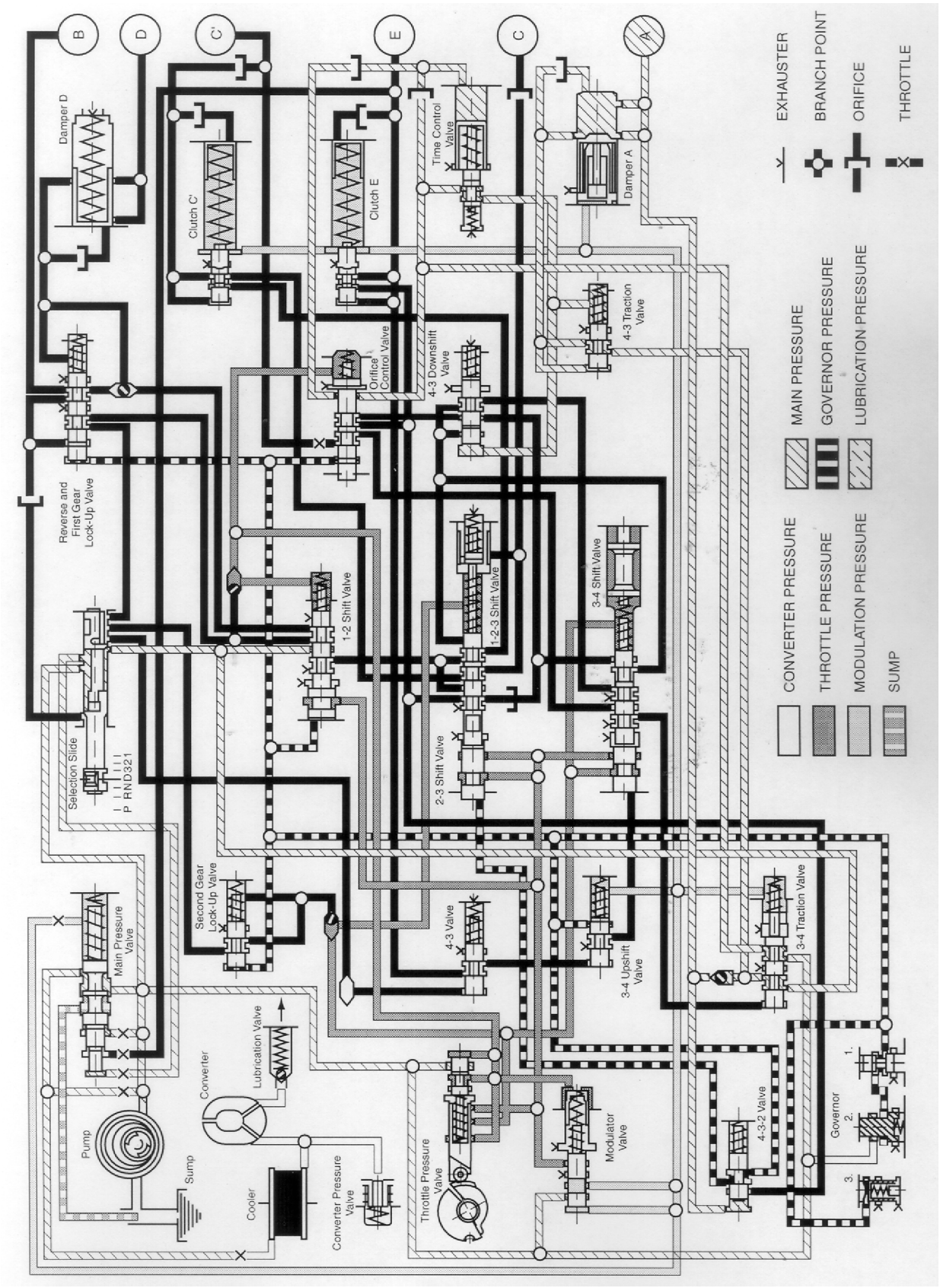

B103A315

POSITION D – SECOND GEAR, IDLING

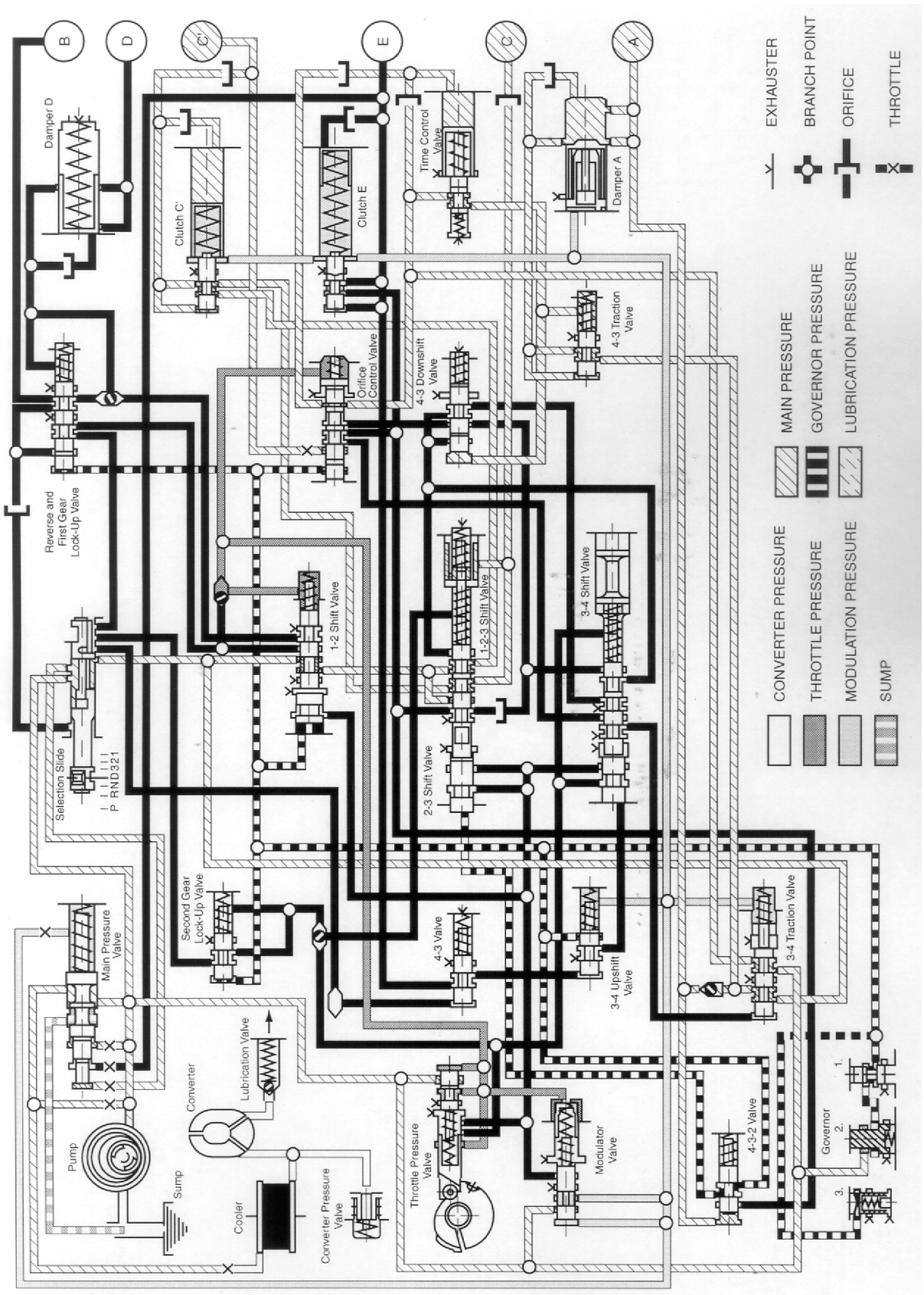

B103A316

POSITION D – SECOND GEAR, FULLY ACCELERATED

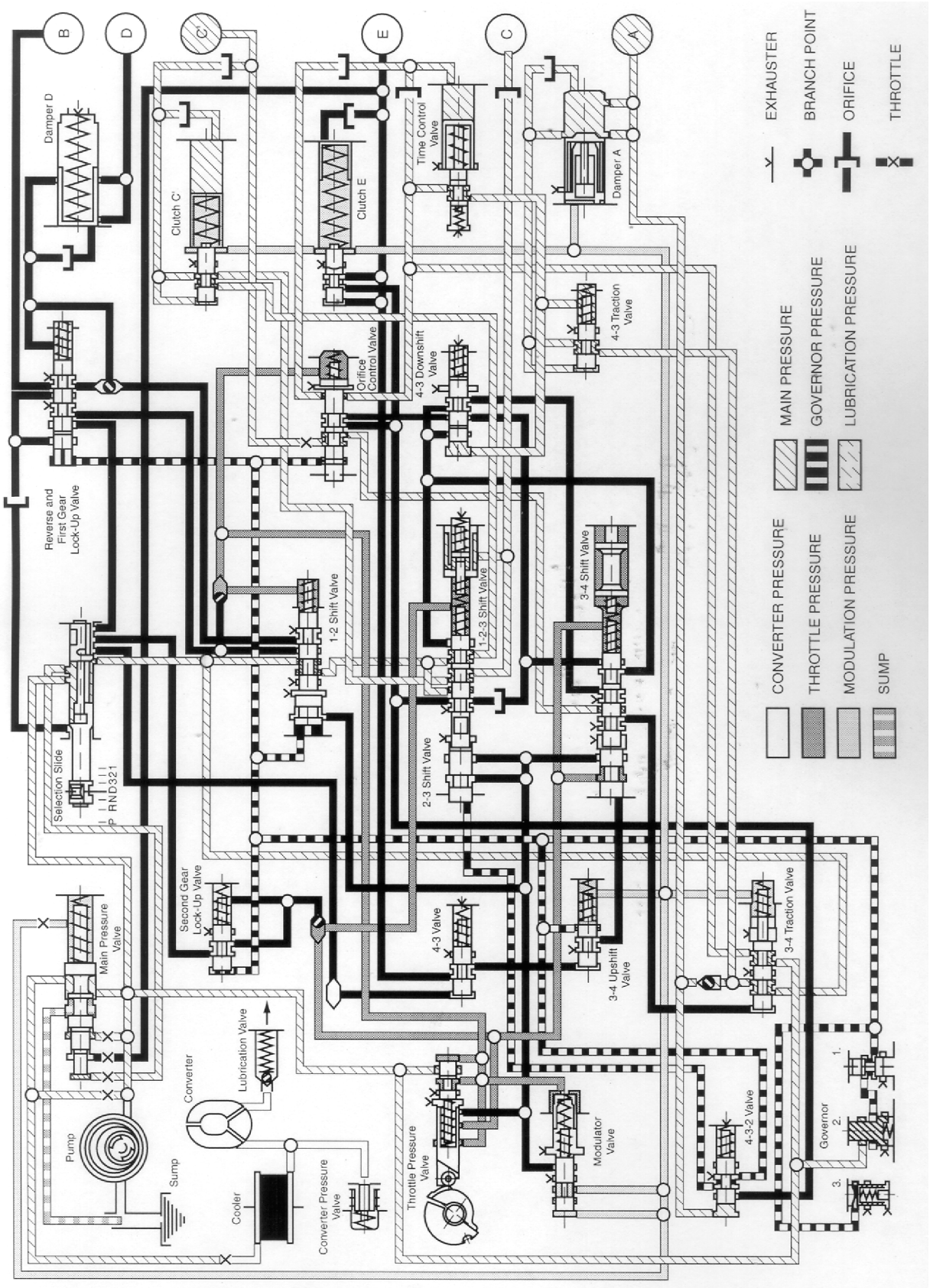

B103A317

POSITION D – SECOND GEAR, KICKDOWN

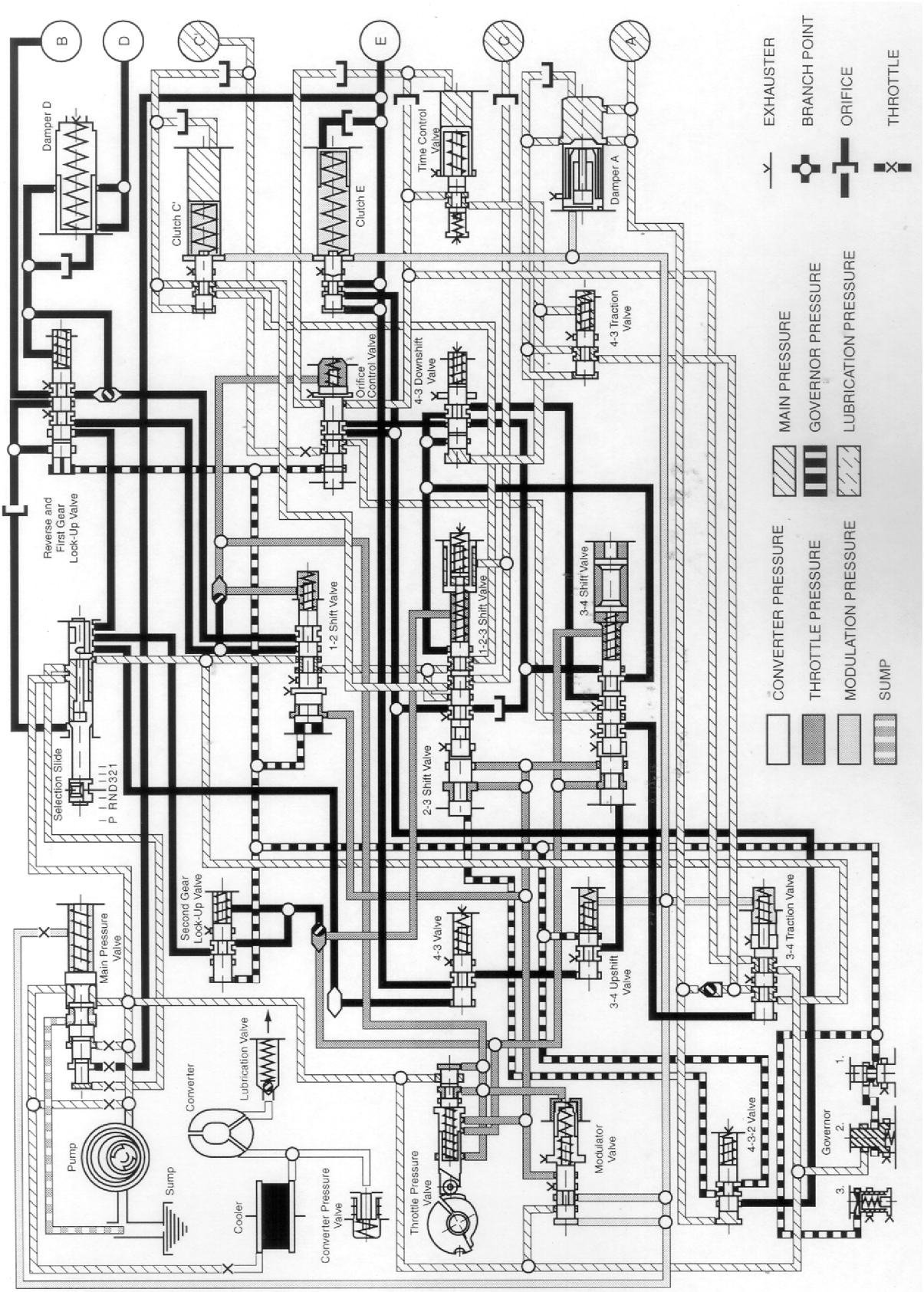

B103A318

POSITION D – THIRD GEAR, IDLING

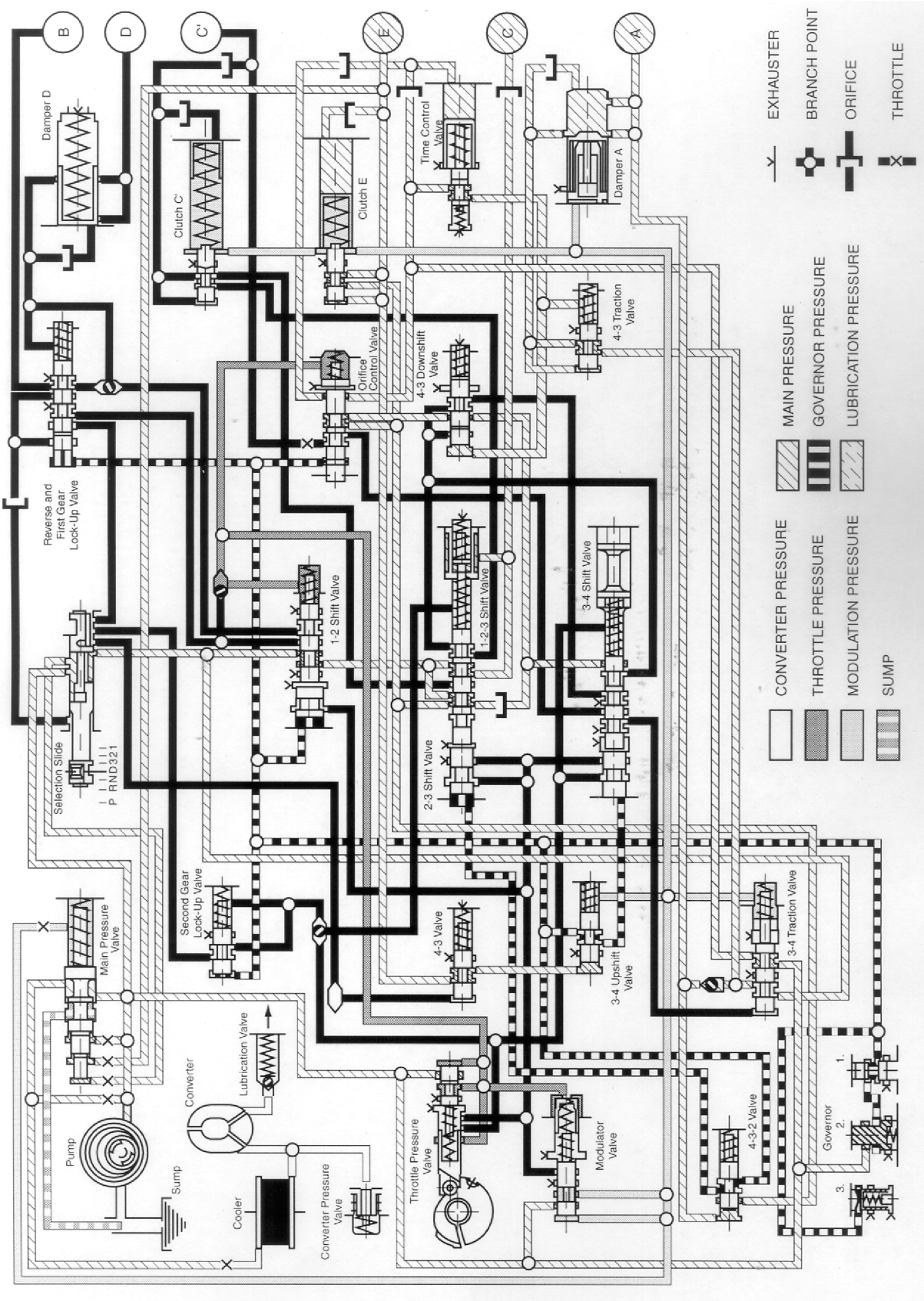

B103A319

POSITION D – THIRD GEAR, FULLY ACCELERATED

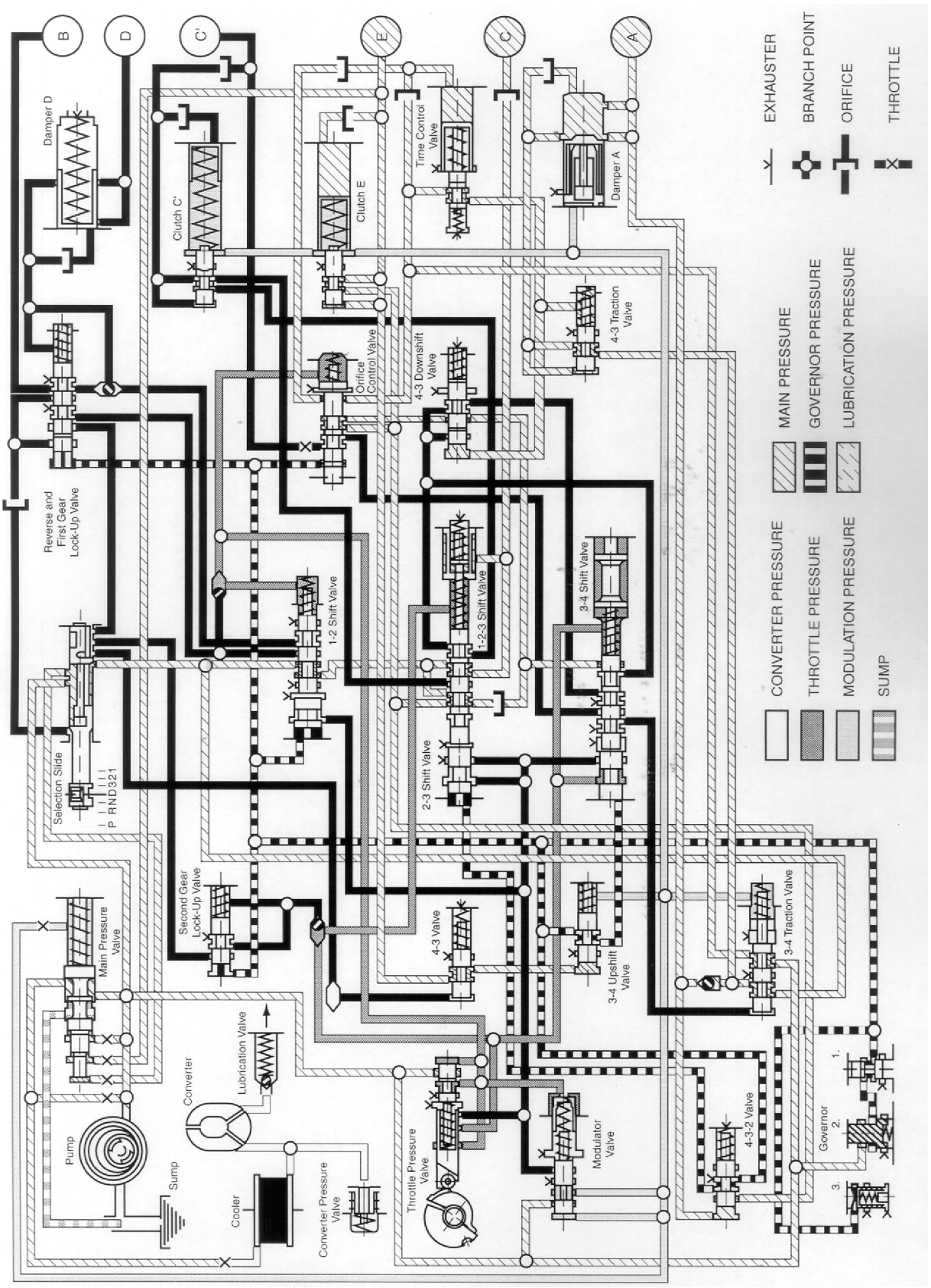

B103A320

POSITION D – THIRD GEAR, KICKDOWN

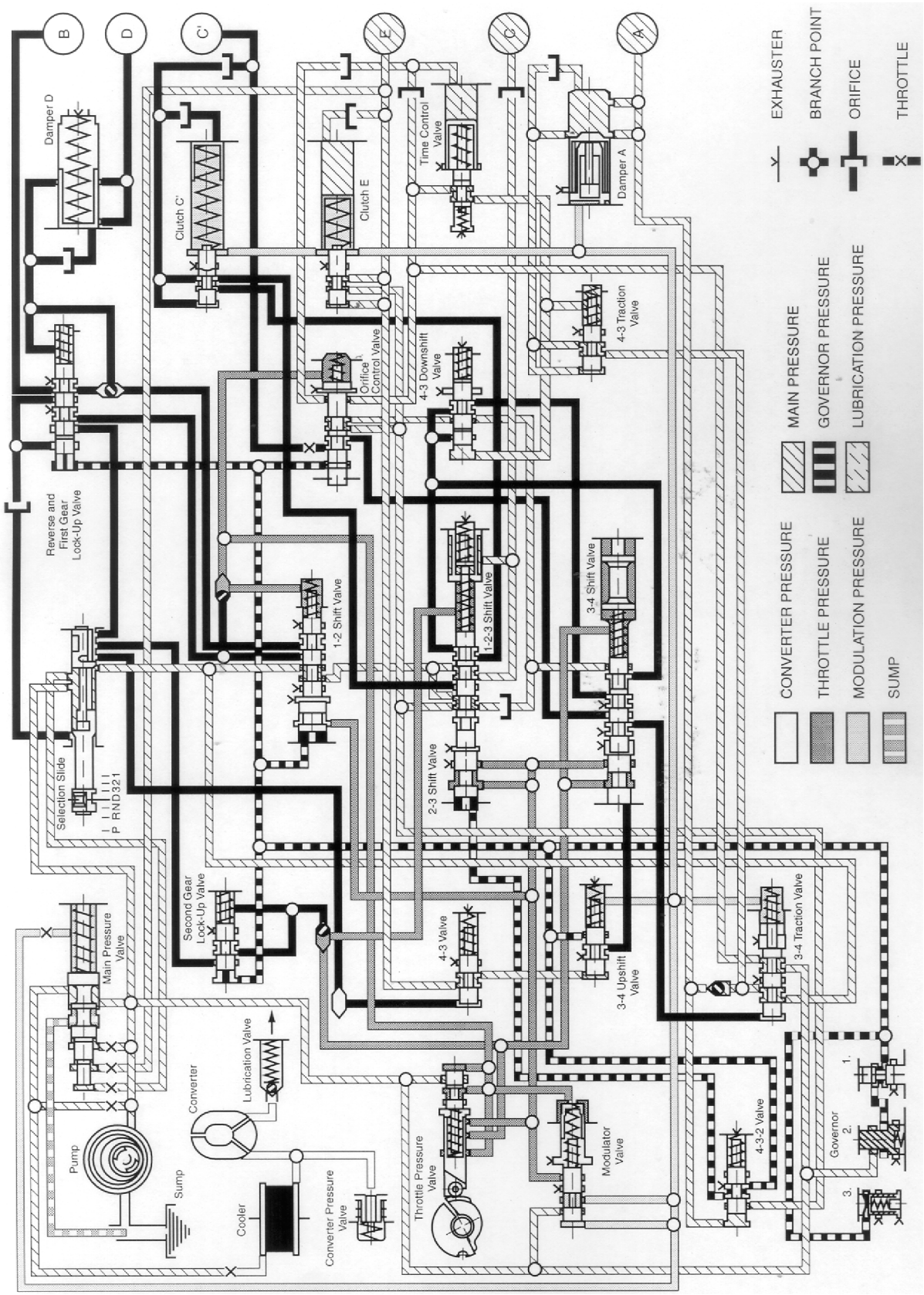

B103A321

POSITION D – FOURTH GEAR, IDLING

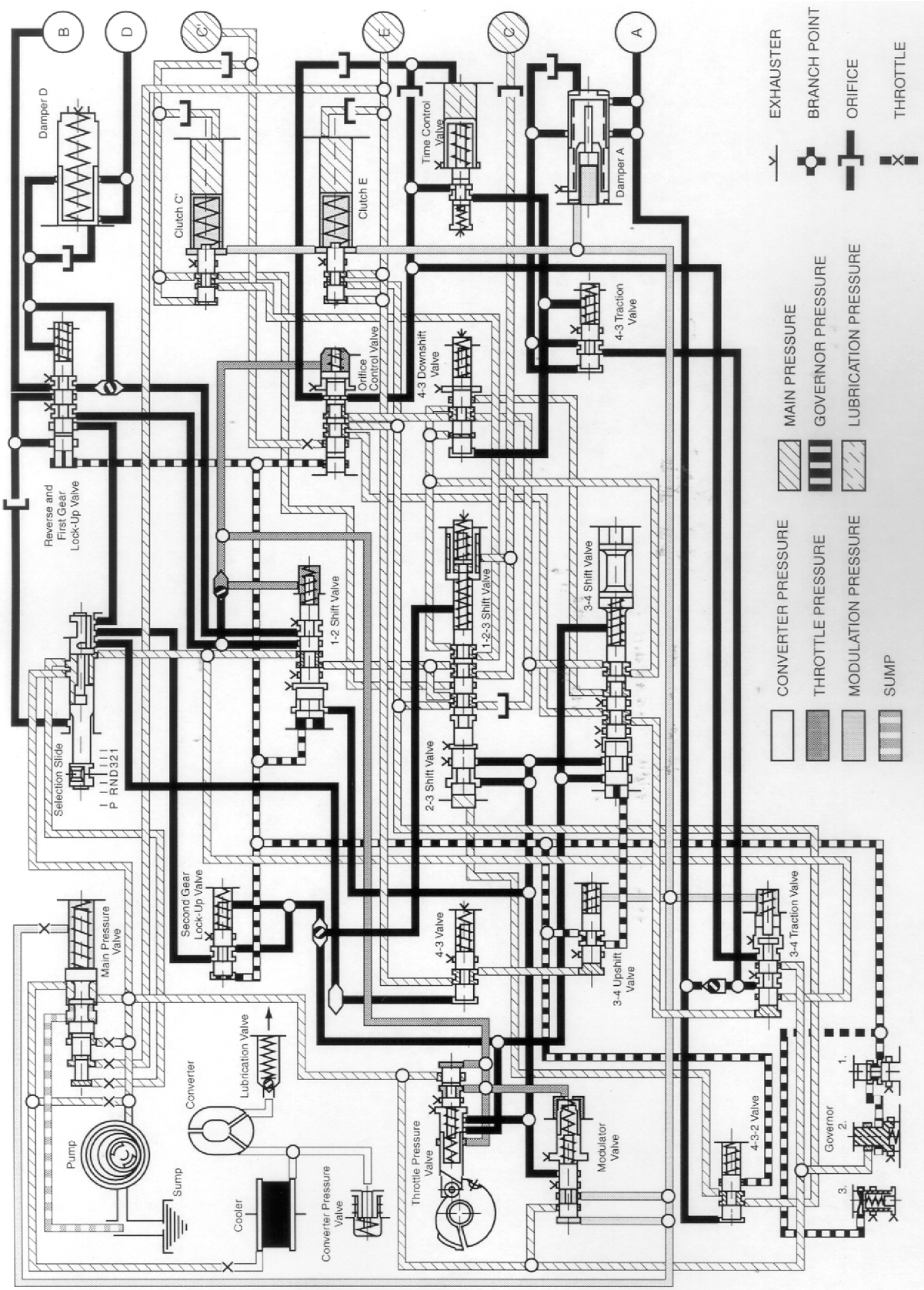

B103A322

POSITION D – FOURTH GEAR, FULLY ACCELERATED

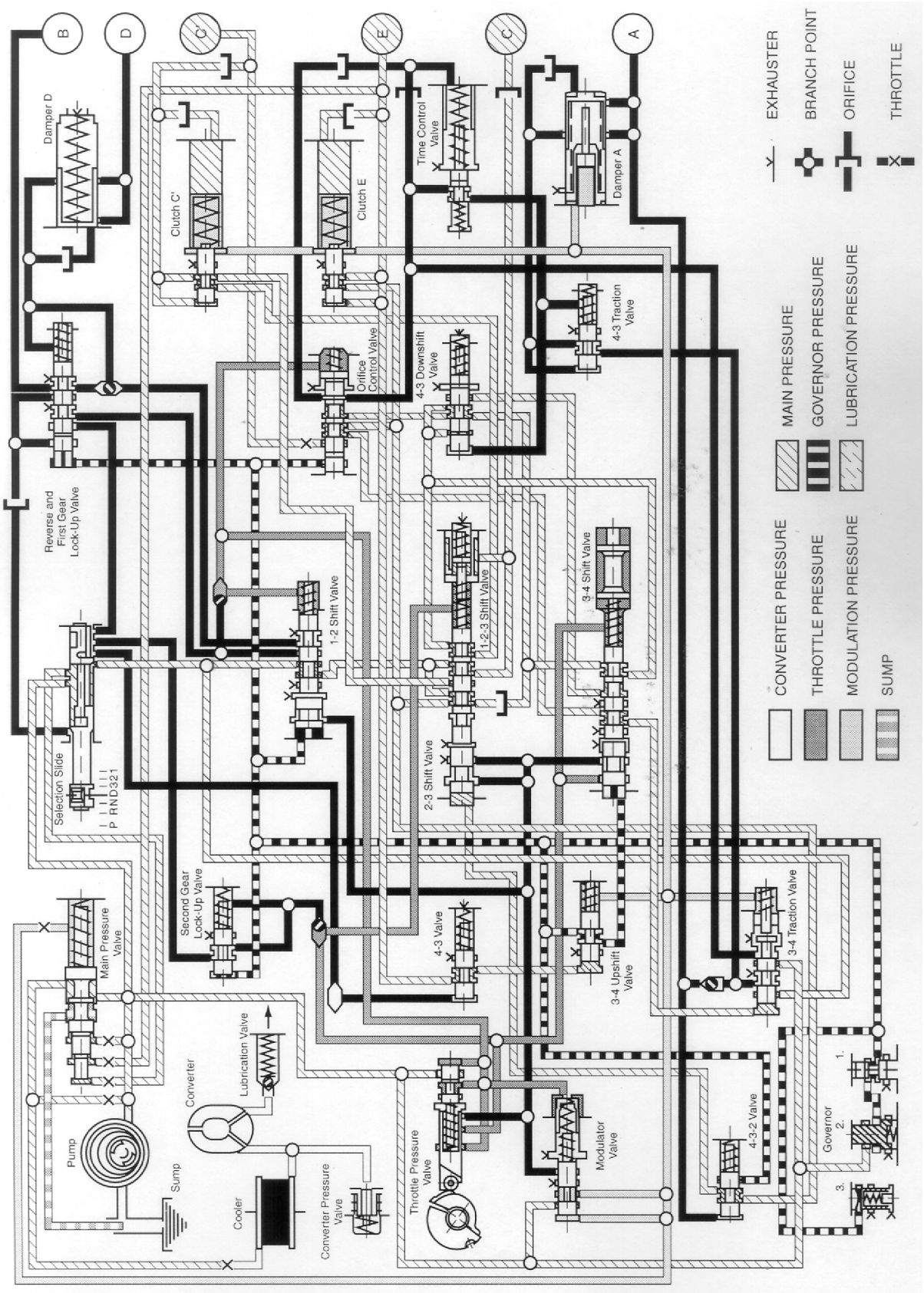

B103A323

POSITION D – FOURTH GEAR, KICKDOWN

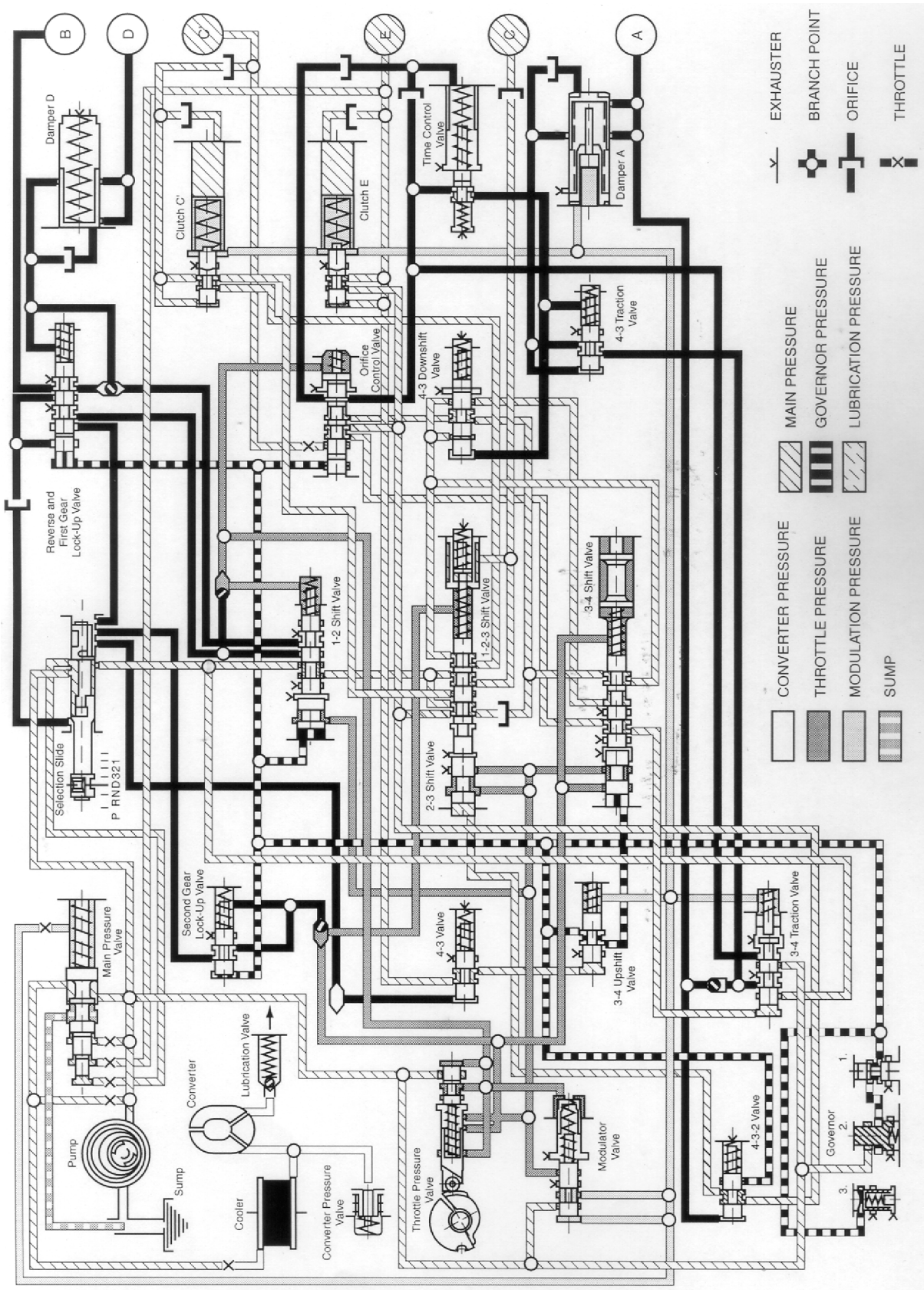

B103A324

POSITION 3 – THIRD GEAR, IDLING

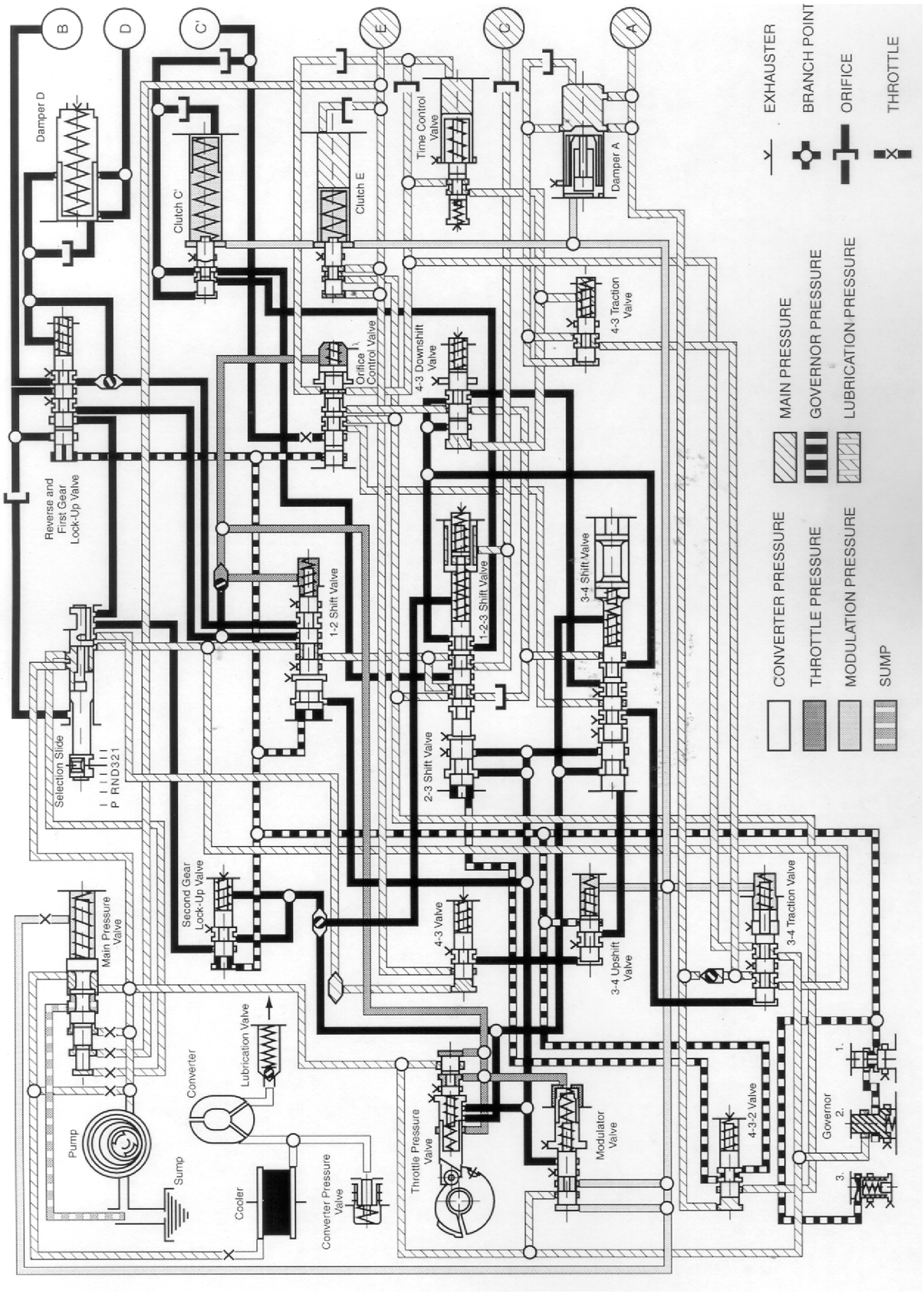

B103A325

POSITION 3 – THIRD GEAR, FULLY ACCELERATED

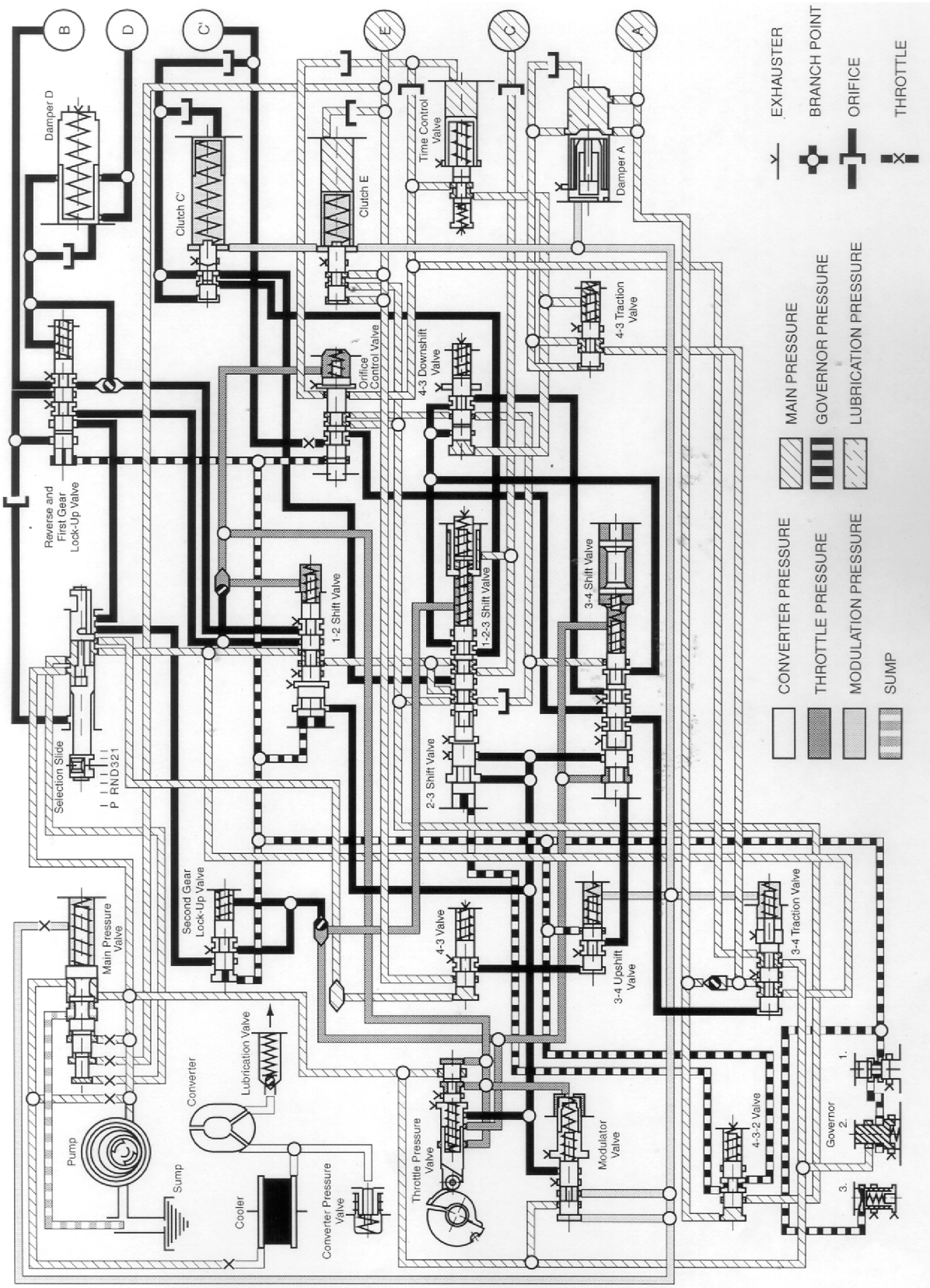

B103A326

POSITION 3 – THIRD GEAR, KICKDOWN

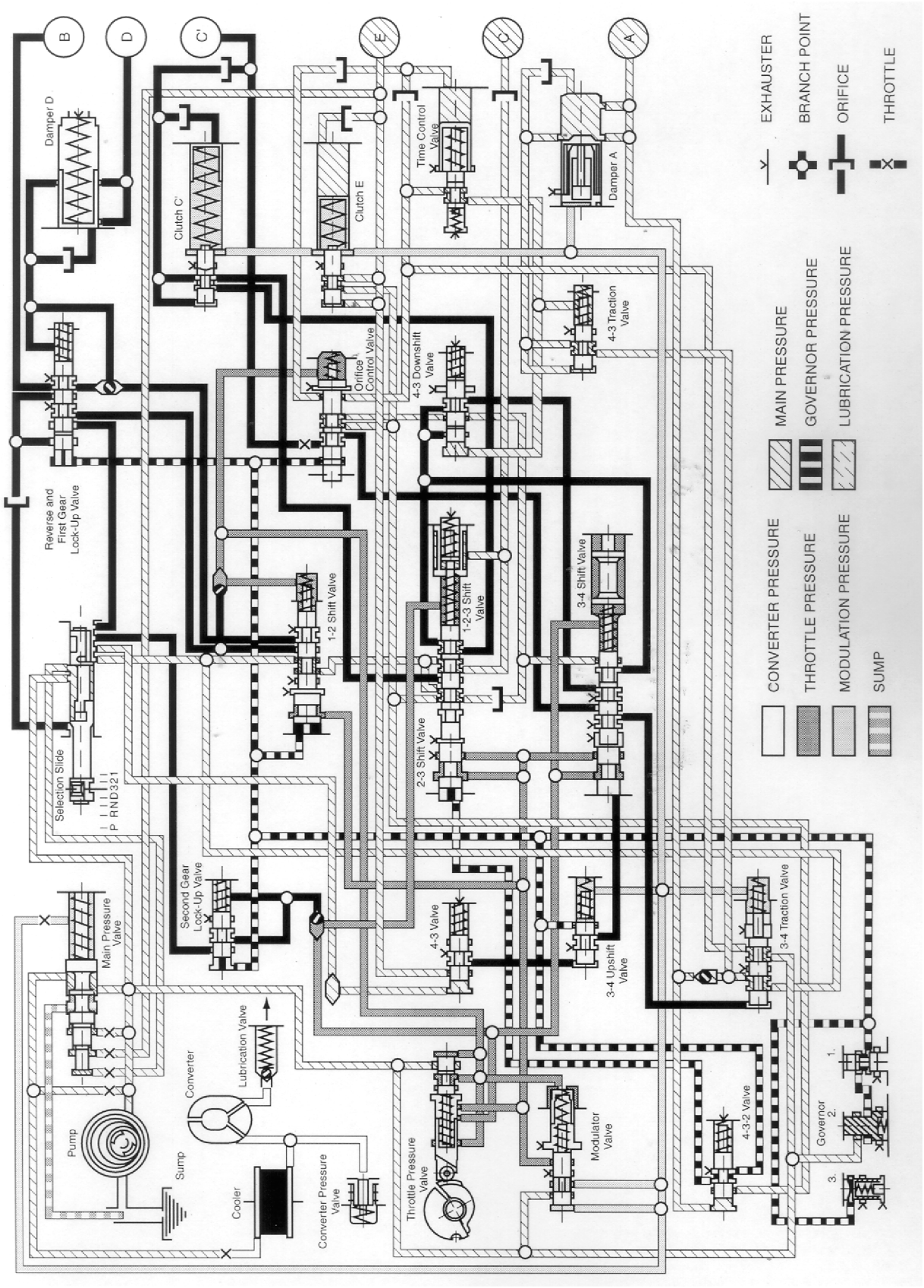

B103A327

POSITION 2 – THIRD GEAR, IDLING

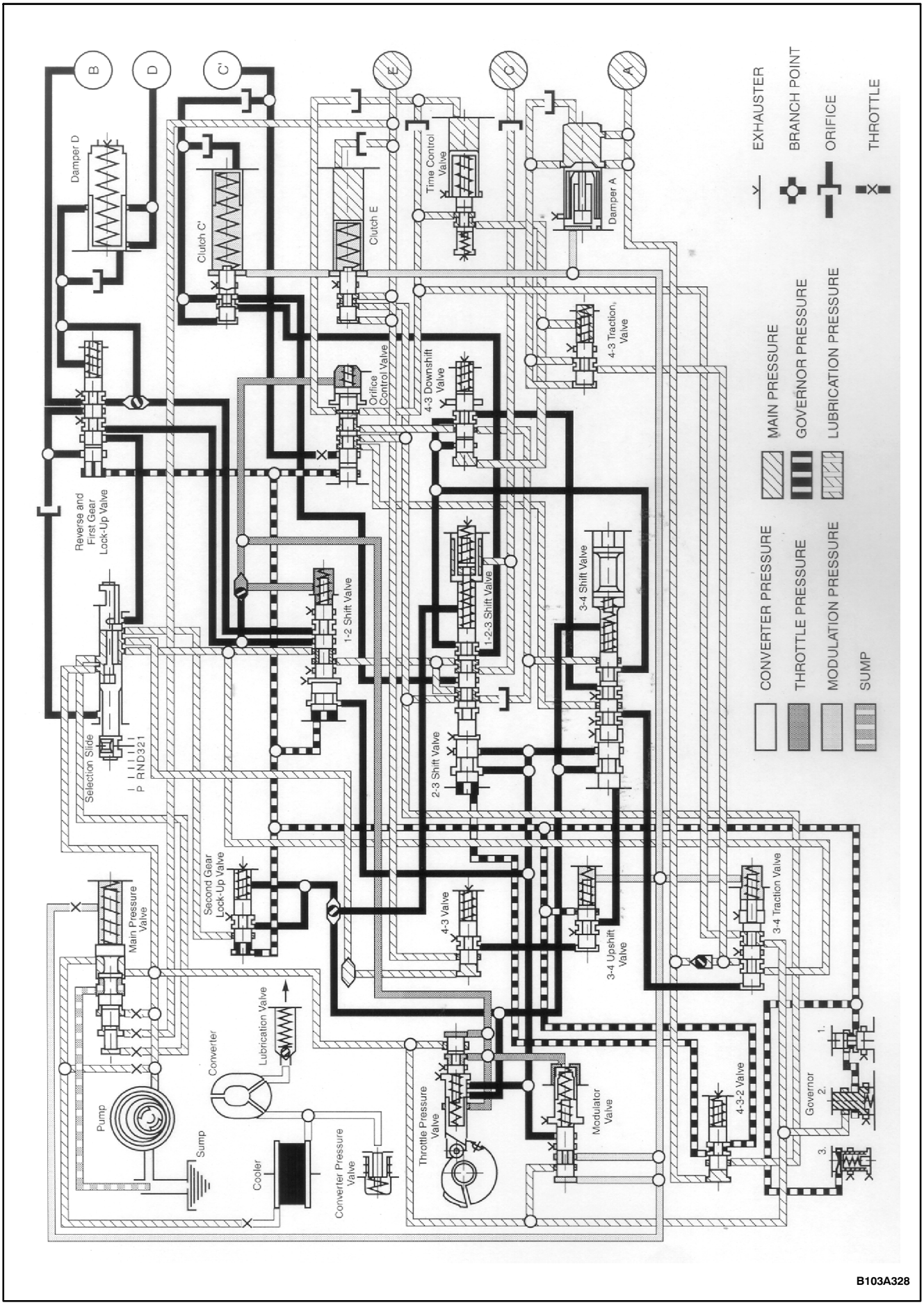

POSITION 2 – SECOND GEAR, FULLY ACCELERATED

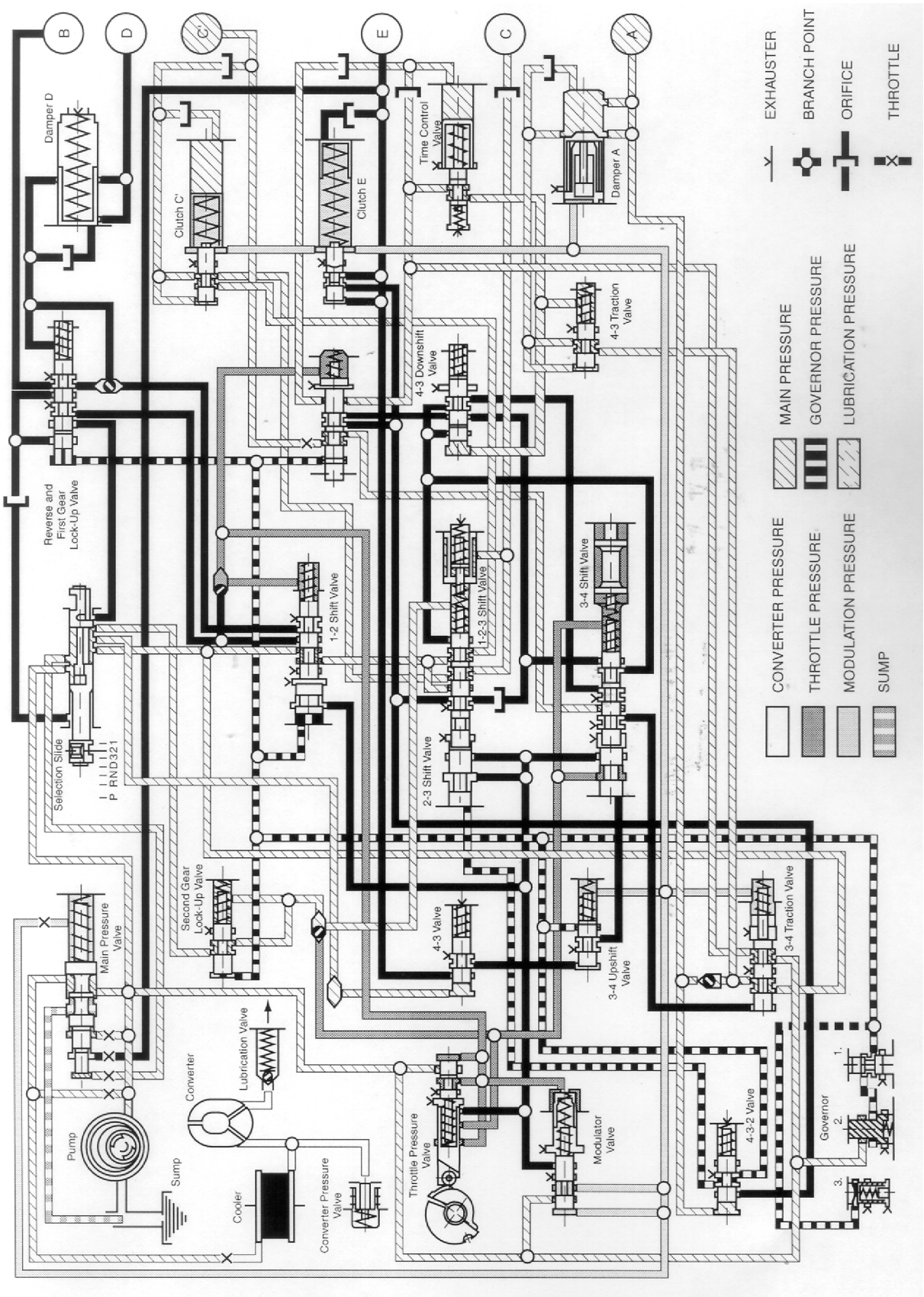

B103A329

POSITION 1 – THIRD GEAR, IDLING

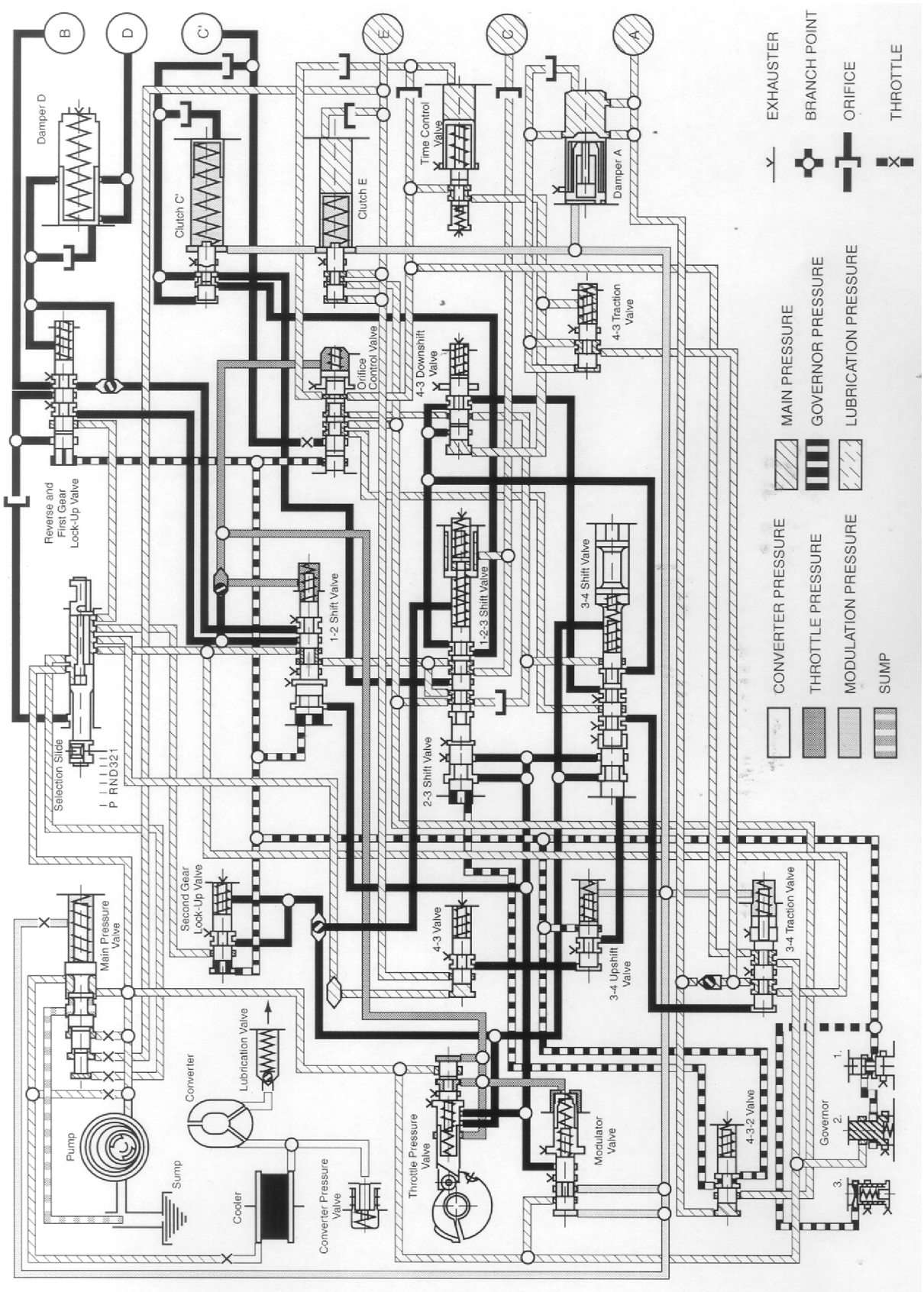

B103A330

POSITION 1 – SECOND GEAR, IDLING

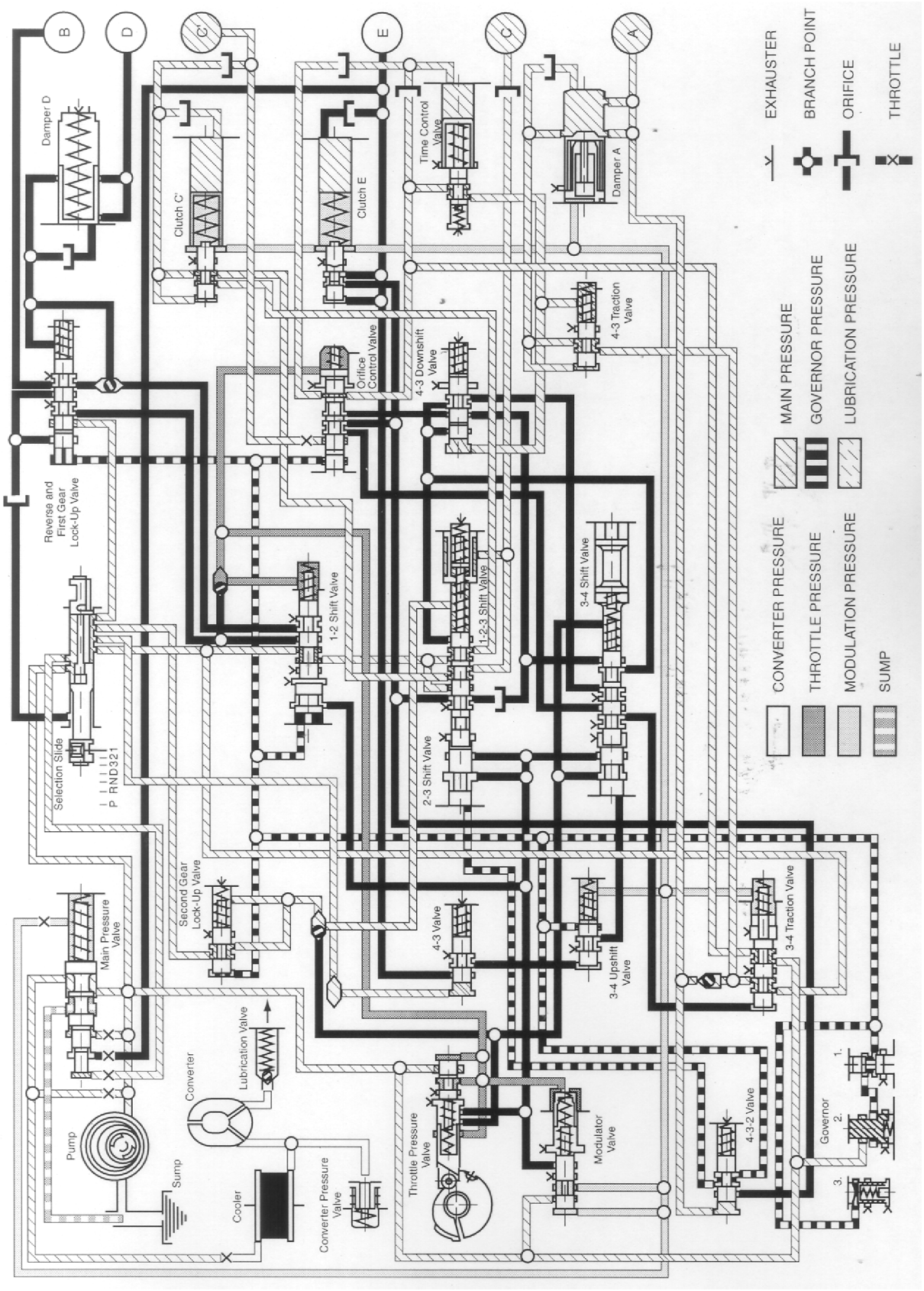

B103A331

POSITION 1 – FIRST GEAR, FULLY ACCELERATED

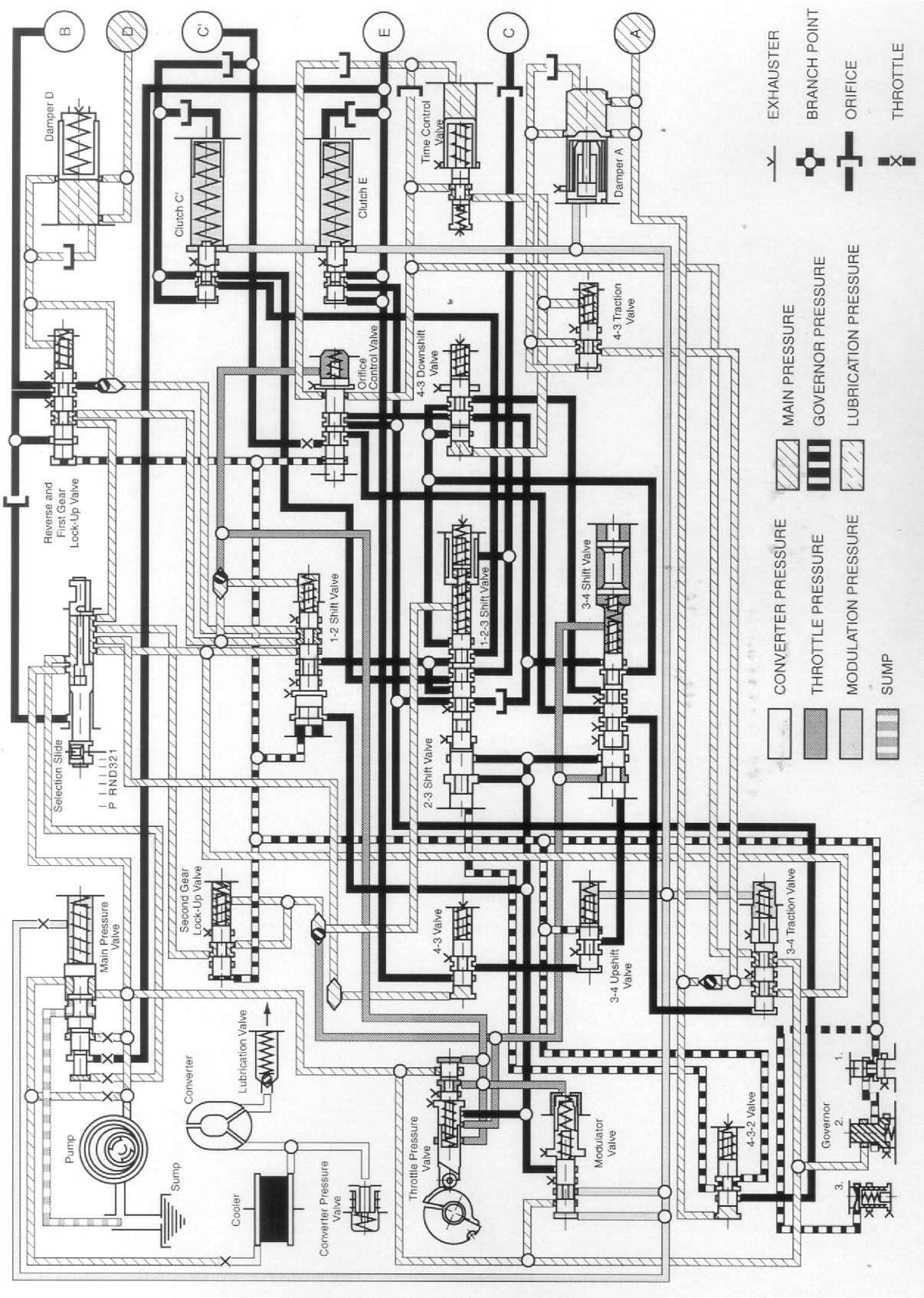

B103A332

COMPONENT LOCATOR

ZF 4 HP 14 AUTOMATIC TRANSAXLE

Exterior Component Locator

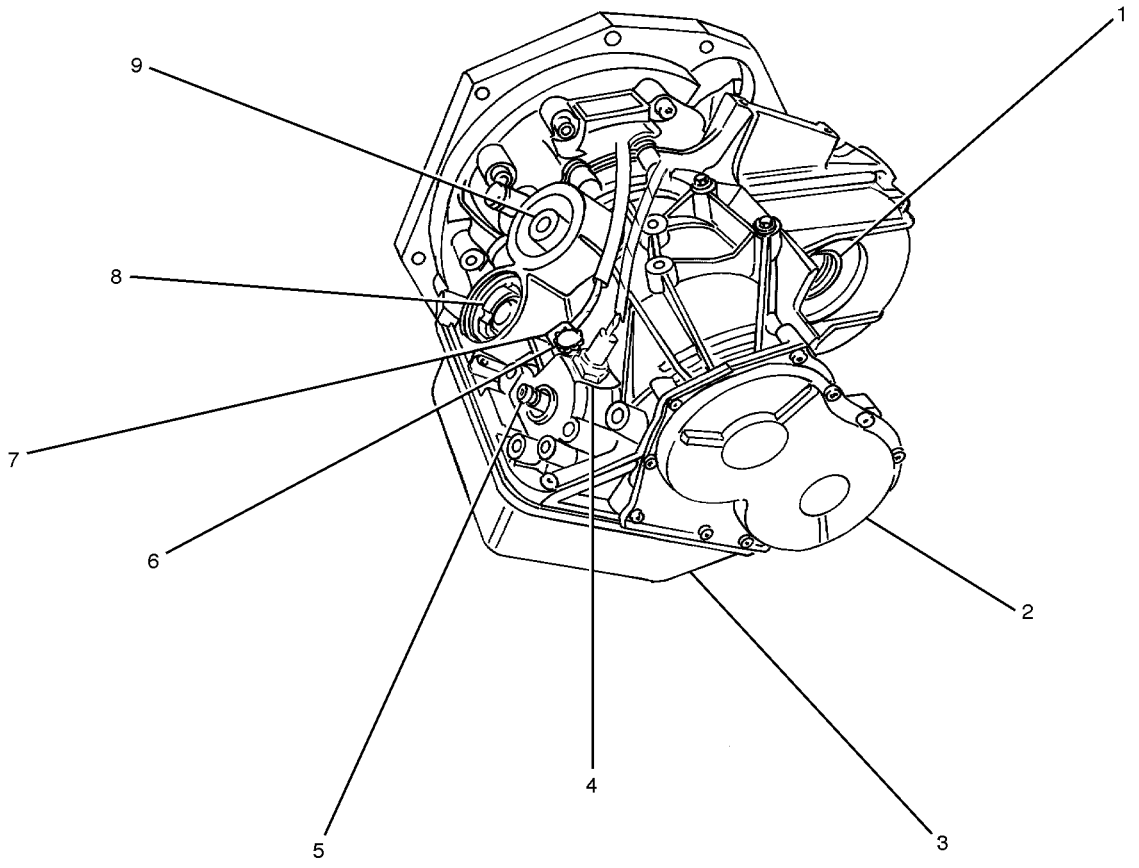

1 Differential Output
2 Side Cover
3 Fluid Pan
4 Neutral Start Switch
5 Selector Lever Connection
6 Breather Plug
7 Throttle Valve Cable
8 Brake C′
9 Cooler Pipe Outlet

Interior Component Locator

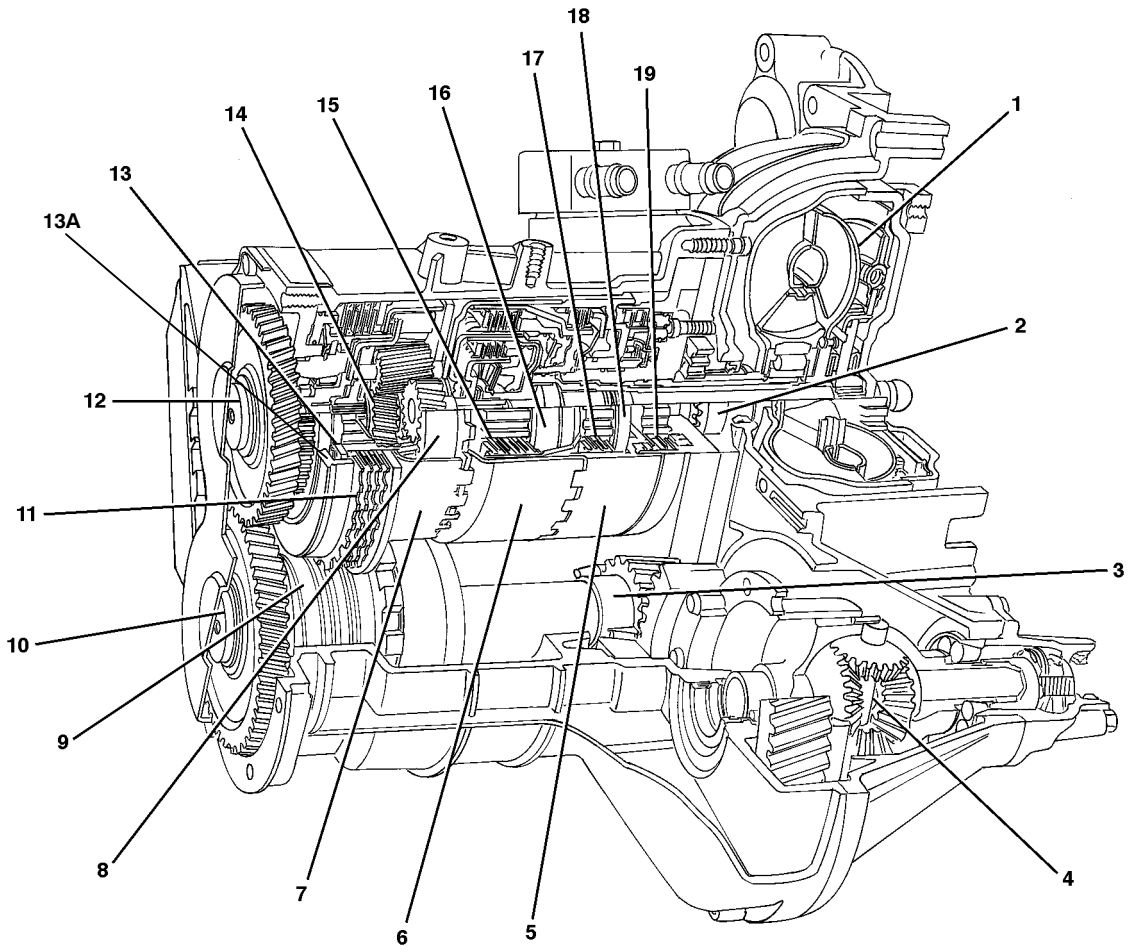

1 Torque Converter
2 Intermediate Pump/Brake C
3 Output Shaft
4 Differential
5 Clutch B
6 Drive Shell
7 Web Gear
8 Planetary Assembly
9 Governor
10 Large Spur Gear
11 Brake D Assembly
12 Small Spur Gear
13 Blue Diaphragm Spring
13A Piston D (Red Piston)
14 Sun Gear
15 Clutch A Assembly
16 Piston A
17 Clutch B Assembly
18 Piston B
19 Brake C Assembly

DIAGNOSIS

SYMPTOM DIAGNOSIS

PRELIMINARY CHECKS

Checks	Action
Check for the engine running at an incorrect idle speed.	Adjust the idle speed.
Check for a noisy transaxle when driving on curvy roads.	Add transaxle fluid.
Check for the engine spinning without providing power flow to the transaxle.	Add transaxle fluid.
Check for foam at the fluid breather.	Remove some transaxle fluid.
Check for large pieces of metal in the fluid pan.	Replace the transaxle.
Check for an incorrect power flow in forward and reverse.	Adjust the selector linkage.

POSITION P – PARK POSITION DOES NOT ENGAGE OR SLIPS

Checks	Action
Check for an incorrectly adjusted selector linkage or cable.	Adjust the selector linkage or the cable. Replace the selector linkage or the cable as needed.
Check for an incorrect clearance at the stop plate.	Measure and adjust the stop plate to the correct clearance.
Check for incorrectly installed park system components.	Correctly install the park system components.
Check for excessive friction in the parking interlock mechanism.	Clean the parking interlock mechanism parts. Replace the parking interlock mechanism parts as needed.
Check for excessive clearance on the spring plate.	Adjust the spring plate. Replace the spring plate as needed.

POSITION P – ENGINE DOES NOT START

Checks	Action
Check for a faulty starter interlock switch.	Replace the starter interlock switch.
Check for a defective neutral safety switch.	Replace the neutral safety switch.
Check for excessive clearance at the selector shaft.	Adjust the clearance at the selector shaft.

POSITION P – NO SHIFT TO REVERSE

Checks	Action
Check for a faulty brake transaxle shift interlock solenoid.	Replace the brake transaxle shift interlock solenoid.

POSITION P – SHIFT OCCURS WITHOUT ENGAGING BRAKE PEDAL

Checks	Action
Check for a faulty brake transaxle shift interlock solenoid.	Replace the brake transaxle shift interlock solenoid.
Check for short in the circuit between the brake switch and the brake transaxle shift interlock solenoid.	Repair the short in the circuit between the brake switch and the brake transaxle shift interlock solenoid.

POSITION R – NO REVERSE

Checks	Action
Check for an incorrectly adjusted shift control cable.	Adjust the shift control cable. Replace the shift control cable as needed.
Check for a clogged fluid filter.	Replace the fluid filter.
Check for a damaged clutch B.	Replace the clutch B. Replace the transaxle as needed.
Check for a damaged brake D. In this case there is no braking action in position 1, first gear.	Replace the brake D. Replace the transaxle as needed.
Check for a jammed governor.	Replace the governor coupling.
Check for a locking valve 1 and a jammed Reverse.	Replace the locking valve 1 in the lower valve housing of the valve body. Replace the valve body as needed.

POSITION R – SLIPPING OR VIBRATION WHEN MOVING OFF

Checks	Action
Check for a damaged clutch B or a damaged brake D.	Replace the clutch B and/or the brake D. Replace the transaxle as needed.
Check for a leak in the fluid feed of the clutch B.	Replace the rectangular rings on the intermediate plate. Replace the intermediate plate and the pump assembly as needed. Replace the transaxle as needed.

POSITION R – HARD ENGAGING JERK OR DOUBLE JERK

Checks	Action
Check for a faulty damper D.	Replace the damper D restrictor in the fluid channel housing of the valve body. Replace the valve body as needed.

POSITION R – REVERSING LAMP DOES NOT COME ON

Checks	Action
Check for a faulty fuse.	Replace the fuse.
Check for a faulty electrical circuit.	Replace the electrical circuit.
Check for a faulty starter interlock switch.	Replace the starter interlock switch.

POSITION N – ENGINE DOES NOT START

Checks	Action
Check for a faulty starter interlock switch.	Replace the starter interlock switch.

POSITION N – VEHICLE MOVES OR CREEPS FORWARD

Checks	Action
Check for an incorrectly adjusted selector linkage or cable between the selector lever and the transaxle case.	Adjust the selector linkage or the cable between the selector lever and the transaxle case. Replace the selector linkage or the cable as needed.

POSITION D – NO POWER

Checks	Action
Check for an open converter relief valve.	Replace the torque converter.
Check for a clogged fluid filter.	Replace the fluid filter.
Check for a faulty clutch A.	Replace the clutch A. Replace the transaxle as needed.
Check for a slipping first gear freewheel.	Replace the first gear freewheel. Replace the transaxle as needed.
Check for an incorrectly adjusted selector linkage or cable between the selector lever and the transaxle case.	Adjust the selector linkage or cable between the selector lever and the transaxle case.
Check for a jammed 3-4 cable valve.	Replace the 3-4 shuttle valve and the spring in the valve housing of the valve body. Replace the valve body as needed.

POSITION D – NO SHIFT FROM EITHER FIRST TO SECOND OR SECOND TO FIRST

Checks	Action
Check for a dirty governor.	Clean the governor coupling. Replace the governor as needed.
Check for a jammed selector valve 1-2.	Replace the 1-2 change valve in the lower valve housing of the valve body. Replace the valve body as needed.

POSITION D – NO SHIFT FROM FIRST TO SECOND ONLY

Checks	Action
Check for a faulty brake C or C′.	Replace the brake C and/or C′. Replace the transaxle as needed.

POSITION D – NO SHIFT FROM EITHER SECOND TO THIRD OR THIRD TO SECOND

Checks	Action
Check for a dirty governor.	Clean the governor coupling. Replace the governor as needed.
Check for a jammed selector valve 2-3.	Replace the 2-3 shuttle valve and the spring in the valve housing of the valve body. Replace the valve body as needed.

POSITION D – NO SHIFT FROM SECOND TO THIRD ONLY

Checks	Action
Check for a faulty clutch E.	Replace the clutch E. Replace the transaxle as needed.
Check for a leak at the fluid feed of the clutch E.	Replace the clutch E. Replace the transaxle as needed.
Check for faulty rectangular rings on the engine shaft or the turbine shaft.	Replace the rectangular rings on the engine or the turbine shaft. Replace the intermediate plate and the pump assembly. Replace the transaxle as needed.
Check for leaks at the protection cap in the intermediate plate.	Replace the intermediate plate and the pump assembly.

POSITION D – NO SHIFT FROM EITHER THIRD TO FOURTH OR FOURTH TO THIRD

Checks	Action
Check for a dirty governor.	Clean the governor coupling. Replace the governor as needed.
Check for a jammed selector valve 3-4.	Replace the 3-4 shuttle valve and the spring in the valve housing of the valve body. Replace the valve body as needed.

POSITION D – NO SHIFT FROM THIRD TO FOURTH ONLY

Checks	Action
Check for a faulty brake C′ when the 1-2 gearshift is OK.	Replace brake C′. Replace the transaxle as needed.
Check for a brake band C′ that has not been pretensioned.	Adjust brake band C′.
Check for a jammed upshift valve 2-3-4.	Replace the 2-3-4 shuttle valve and spring in the lower valve housing of the valve body. Replace the valve body as needed.
Check for a jammed position 3 valve.	Replace the position 3 shuttle valve and spring in the lower valve housing of the valve body. Replace the valve body as needed.

POSITION D – VEHICLE MOVES OFF IN SECOND

Checks	Action
Check for a jammed governor bushing.	Replace the governor coupling.
Check for a jammed selector valve 1-2.	Replace the 1-2 change valve in the lower valve housing of the valve body. Replace the valve body as needed.
Check for an overly tightened brake band.	Adjust the brake band.
Check for a brake band that does not release.	Replace the brake band.

POSITION D – VEHICLE MOVES OFF IN THIRD

Checks	Action
Check for a faulty middle rectangular ring on the governor flange.	Replace the rectangular ring on the governor flange. Replace the governor coupling.
Check for a jammed governor bushing.	Replace the governor coupling.
Check for a jammed selector valve 1-2 and 2-3.	Replace the 1-2 change valve in the lower valve housing and the 2-3 shuttle valve and the spring in the valve housing of the valve body. Replace the valve body.
Check for a leak at the protective cap in the intermediate flange with the clutch B constantly filled.	Replace the seal at the protective cap in the intermediate flange.

POSITION D – VEHICLE SHIFTS FROM FIRST TO THIRD

Checks	Action
Check for a jammed selector valve 2-3.	Replace the 2-3 shuttle valve and the spring in the valve housing of the valve body. Replace the valve body as needed.
Check for a jammed valve 2-3-4.	Replace the 2-3-4 change-up shuttle valve and the spring in the lower valve housing of the valve body. Replace the valve body as needed.
Check for a jammed valve 1-2-3 at the face end of the 1-2 valve.	Replace the 1-2-3 control shuttle valve and the spring in the valve housing of the valve body. Replace the valve body as needed.

POSITION D – VEHICLE SHIFTS FROM FIRST TO FOURTH

Checks	Action
Check for engine cutout.	Replace the valve body.

POSITION D – ZERO LOAD SHIFT NOT OK

Checks	Action
Check for a dirty governor.	Clean the governor. Replace the governor coupling as needed.
Check for a leak in the area of the governor.	Replace the transaxle.
Check for selector valves that do not move freely.	Replace the valve body.

POSITION D – FULL LOAD SHIFT POINTS NOT OK

Checks	Action
Check for an incorrectly adjusted accelerator cable.	Adjust the accelerator cable.

POSITION D – NO KICKDOWN SHIFT FROM SECOND TO FIRST

Checks	Action
Check for an incorrectly adjusted accelerator cable.	Adjust the accelerator cable.

POSITION D – NO KICKDOWN SHIFT FROM THIRD TO SECOND

Checks	Action
Check for an incorrectly adjusted accelerator cable.	Adjust the accelerator cable.

POSITION D – NO KICKDOWN SHIFT FROM FOURTH TO THIRD

Checks	Action
Check for an incorrectly adjusted accelerator cable.	Adjust the accelerator cable.
Check for an imbalance in the governor.	Replace the governor.

POSITION D – ZERO LOAD SHIFTS TOO HARD

Checks	Action
Check for the damper not operating properly.	Replace the valve body.
Check for a modulation pressure that is too high.	Replace the valve body.
Check for damaged discs.	Replace the transaxle.

POSITION D – FULL LOAD AND KICKDOWN SHIFT TAKES TOO LONG

Checks	Action
Check for a damper not operating properly.	Replace the valve body.
Check for a modulation pressure that is too high.	Replace the valve body.
Check for damaged discs.	Replace the transaxle.

POSITION D – FULL LOAD AND KICKDOWN SHIFT IS TOO HARD

Checks	Action
Check for an improper modulation pressure.	Replace the valve body.
Check for a damper not operating properly.	Replace the valve body.

POSITION D – ENGINE SPEED TOO HIGH WHEN SHIFTING FROM THIRD TO FOURTH

Checks	Action
Check for an incorrectly adjusted accelerator cable.	Adjust the accelerator cable.
Check for a jammed diaphragm control valve in the overrun position.	Replace the valve body.
Check for the cable of valve 3-4 not operating freely.	Replace the 3-4 shuttle valve and the spring. Replace the valve body as needed.
Check for an incorrectly adjusted brake band.	Adjust the brake band.
Check for an inaccurate modulation pressure.	Replace the valve body.

POSITION D – ENGINE SPEED TOO HIGH WHEN SHIFTING FROM FOURTH TO THIRD

Checks	Action
Check for an inaccurate operation of the time control valve and the shiftdown valve.	Replace the valve body.
Check for a damaged clutch A.	Replace clutch the A. Replace the transaxle as needed.
Check for inaccurate operation of the clutch A and the cable of valve 4-3.	Replace the 4-3 shuttle valve and the spring in the valve housing of the valve body. Replace the valve body as needed.
Check for an inaccurate air pressure supply in the turbo version only.	Repair the air supply lines as needed.

POSITION 2 – MANUAL DOWNSHIFT NOT OK

Checks	Action
Check for an inoperative locking valve 2.	Replace the valve body.
Check for an inoperative governor.	Replace the governor coupling.

POSITION 2 – NO ENGINE BRAKING ACTION

Checks	Action
Check for a damaged brake C′.	Replace the brake C′. Replace the transaxle as needed.

POSITION 1 – MANUAL DOWNSHIFT FROM SECOND TO FIRST NOT OK

Checks	Action
Check for an inoperative locking valve of the first and the reverse gears.	Replace the first and the reverse shuttle valve and the spring in the valve housing. Replace the valve body as needed.
Check for an inoperative governor.	Replace the governor coupling.

POSITION 1 – NO ENGINE BRAKING ACTION

Checks	Action
Check for a damaged brake D.	Replace the brake D. Replace the transaxle as needed.

ACCELERATOR CABLE JAMS

Checks	Action
Check for a slipped accelerator cable stop.	Insert a cable stop or replace the accelerator cable.
Check for excessive friction in the sleeve of the accelerator cable.	Replace the accelerator cable.
Check for a jammed governor pressure plunger.	Replace the valve body.

SLIPPING OR VIBRATION WHEN MOVING OFF

Checks	Action
Check for a damaged clutch A.	Replace the clutch A. Replace the transaxle as needed.
Check for a damaged rectangular ring or a damaged O-ring on the turbine shaft seal of the fluid feed of the clutch A.	Replace the rectangular ring or the O-ring on the turbine shaft. Replace the transaxle as needed.
Check for damaged O-rings on the piston A.	Replace the O-rings on the piston A. Replace the piston A as needed. Replace the transaxle as needed.

HARD ENGAGING JERK FROM NEUTRAL TO DRIVE

Checks	Action
Check for a damaged damper A.	Replace the valve body.
Check for a broken spring in damper A.	Replace the valve body.
Check for a damaged clutch A.	Replace the clutch A. Replace the transaxle as needed.
Check for a leak at the ball of cable 3-4.	Replace the valve body.

NOISY OPERATION AND SLUGGISH ENGAGEMENT AFTER LONG TRIP

Checks	Action
Check for a clogged fluid filter.	Replace the fluid filter.

NO POSITIVE ENGAGEMENT FORWARD OR REVERSE, LOUD NOISES

Checks	Action
Check for a damaged driver plate between the converter and the engine.	Replace the driver plate. Replace the transaxle as needed.
Check for a damaged pump driver.	Replace the pump driver. Replace the transaxle as needed.

NOISES IN ALL POSITIONS

Checks	Action
Check for a reduced fluid level.	Correct the fluid level.
Check for a leak at the valve body.	Replace the valve body.

INTAKE NOISES FROM FLUID PUMP

Checks	Action
Check for a clogged fluid filter.	Replace the fluid filter.

NOISES VARY ACCORDING TO SPEED

Checks	Action
Check for an altered or an incorrectly adjusted bearing setting of the spur gear drive.	Adjust the bearing setting on the spur gear drive. Replace the transaxle as needed.
Check for an altered or an incorrectly adjusted bearing setting of the differential.	Adjust the bearing setting on the differential. Replace the transaxle as needed.

LEAK DIAGNOSIS

LINE PRESSURE CHECK PROCEDURE

Hydraulic Test

Measure Line Pressure

1. Remove the transaxle case test plug and mount the oil pressure gauge.
2. Check the four wheels.
3. Fully apply the parking brake.
4. Step down strongly on the brake pedal with your left foot.
5. Step the engine and check the idle speed (idling speed " 850 rpm).
6. Shift into "D" range. Manipulate the accelerator pedal with the right foot, measure the line pressure at the engine speeds specified in the table.
7. Perform the same test in "R" range.

Application			Specification
Line Pressure	Idle	P, N, D, 3, 2, 1	7 ~ 10 kg/cm2 (995 ~ 1,421 psi)
		R	10 ~ 12 kg/cm2 (1,421 ~ 1,706 psi)
	Stall	D	10 ~ 13 kg/cm2 (1,421 ~ 1,848 psi)
		R	10 ~ 12 kg/cm2 (2,274 ~ 2,843 psi)

Stall Test

Caution : Do not continuously run this test longer than 5 seconds. To Check the overall performance of the transaxle the maximum engine speeds and engine by measuring in "D" and "R" range.

Measure Stall Speed

1. Check the four wheels.
2. Fully apply the parking brake.
3. Step down strongly on the break pedal with your left foot.
4. Start the engine.
5. Shift into "D" range. Step all the way down on the accelerator pedal with your right foot.

   Quickly read the highest engine rpm at this time.

   Stall speed : 2100 ± 150 rpm
6. Perform the same test in "R" range.

   Stall speed : 2100 ± 150 rpm

Application	Specification
D	2100 ± 150 rpm
R	2100 ± 150 rpm

Diagnosis

Result	Possible Cause
Lower than specified value at both "D" and "R" ranges.	● Engine power may be insufficient. ● Stator one way clutch is not operating properly.
Higher than specified at "D" range.	● Line pressure is too low. ● Clutch A (Forward clutch) is slipping. ● One way clutch No. 1 is not operating properly.
Higher than specified at "R" range	● Line pressure is too low. ● Clutch B (Rearse clutch) is slipping. ● Brake D (LO/Reverse brake) is slipping.
Higher than specified at both "D" and "R".	● Line pressure is too low.

LOCATING FLUID LEAKS

General Method

1. Verify that the material leaking is the transaxle fluid.
2. Thoroughly clean the suspected leak area.
3. Allow the transaxle to reach the normal operating temperature of 88°C (190°F).
4. Park the vehicle over a clean paper or a clean cardboard.
5. Shut the engine OFF and look for fluid spots on the paper.
6. Make the necessary repairs to correct the leak.

Powder Method

1. Thoroughly clean the suspected leak area.
2. Apply an aerosol type powder, such as foot powder, to the suspected leak area.
3. Allow the transaxle to reach the normal operating temperature of 88°C (190°F).
4. Shut the engine OFF.
5. Inspect the suspected leak area and trace the leak path through the powder to find the source of the leak.
6. Make the necessary repairs to correct the leak.

Once the leak point is found, the source of the leak must be determined and repaired. Refer to “Leak Diagnosis” in this section.

FLUID DRIPS OUT OF CONVERTER BELL HOUSING

Checks	Action
Check the gasket in the converter bell housing.	Replace the gasket.
Check for a leak at the weld seam of the torque converter.	Replace the torque converter.

LEAK BETWEEN TRANSAXLE HOUSING AND CONVERTER BELL HOUSING

Checks	Action
Check for loosened fastening bolts on the torque converter bell housing.	Tighten the bolts on the torque converter bell housing.

LEAK BETWEEN TRANSAXLE HOUSING AND FLUID PAN

Checks	Action
Check for loosened fastening bolts on the fluid pan.	Tighten the fluid pan bolts. Replace the fluid pan as needed.
Check for a loose fluid pan gasket.	Replace the fluid pan gasket.

LEAK BETWEEN TRANSAXLE HOUSING AND SIDE COVER

Checks	Action
Check for loosened bolts connecting the side cover to the housing.	Tighten the side cover bolts.
Check for a damaged side cover gasket.	Replace the side cover gasket.

LEAK AT FLUID COOLER

Checks	Action
Check for a loose cooler pipe bolt connection on the transaxle and/or the radiator.	Tighten the bolts on the transaxle and/or the radiator.
Check for a damaged gasket at the transaxle connection.	Replace the gasket.
Check for a leak in the cooler.	Replace the radiator.

LEAK AT COVER OF BRAKE C′

Checks	Action
Check for a damaged outer O-ring at the cover of the brake C′.	Replace the O-ring.

LEAK AT THE BRAKE BAND C′ ADJUSTING BOLT

Checks	Action
Check for a damaged O-ring at the pin of the brake band C′.	Replace the O-ring.

LEAK AT RETAINING BOLTS FOR SIDE SHAFT BEARING RING

Checks	Action
Check for any loosened bolts.	Tighten the bolts.
Check for a damaged seal.	Replace the seal.

LEAK AT ACCELERATOR CABLE CONNECTOR

Checks	Action
Check for a damaged O-ring on the connector.	Replace the O-ring. Replace the throttle valve cable as needed.

LEAK AT DIFFERENTIAL

Checks	Action
Check for any damaged shaft seals at the input shafts.	Replace the shaft seals.

LEAK AT DIFFERENTIAL EXTENSION

Checks	Action
Check for a damaged O-ring.	Replace the O-ring.
Check for loosened extension housing bolts.	Tighten the extension housing bolts.

LEAK AT SPEEDOMETER DRIVE

Checks	Action
Check for a damaged O-ring in the speedometer sleeve.	Replace the O-ring.
Check for a damaged shaft seal in the speedometer sleeve.	Replace the speedometer sleeve coupling.

LEAK AT BREATHER

Checks	Action
Check whether the fluid level is too high.	Correct the fluid level.
Check for the wrong grade of transaxle fluid.	Drain the transaxle fluid and replace it with the correct transaxle fluid. Replace the transaxle as needed.

LEAK AT SELECTOR SHAFT

Checks	Action
Check for a damaged selector shaft seal.	Replace the selector shaft seal.

MAINTENANCE AND REPAIR

ON-VEHICLE SERVICE

TRANSAXLE FLUID LEVEL CHECKING PROCEDURE

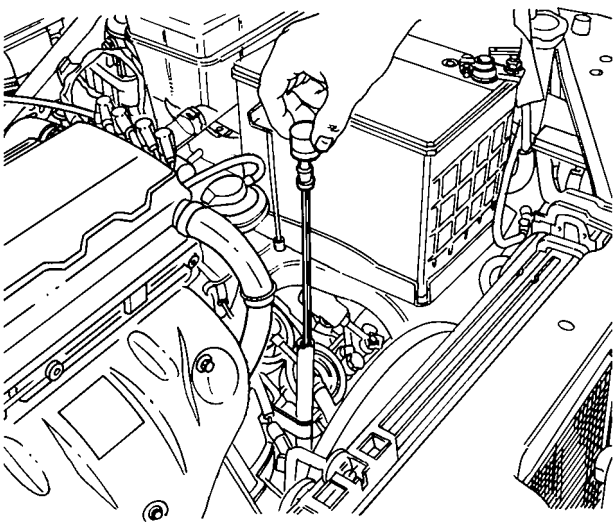

C103A002

Notice: Check the fluid level when the transaxle temperature is above 80°C (176°F).

1. Make sure the vehicle is level.

Important: During the fluid level check, the selector lever must be in the position P.

2. Place the selector lever in position P.
3. Remove the transaxle fluid dipstick and check the transaxle fluid level.

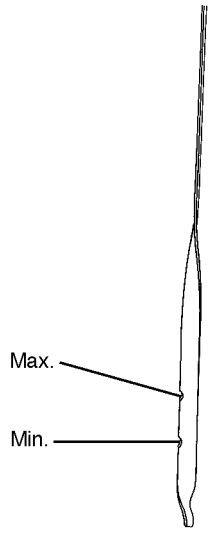

B103A009

4. The correct fluid level must be between the MIN and the MAX notches on the dipstick.

Notice: When adding fluid or making a complete fluid change, always use recommended automatic transaxle fluid. Failure to use the proper fluid will cause hose and seal damage and fluid leaks.

5. If the fluid level is below the MIN notch, add transaxle fluid through the fluid filler tube and check for leaks in the transaxle.
6. If the fluid is above the MAX notch, the transaxle is overfilled. Drain some fluid through the fluid pan drain plug. Check the transaxle fluid level.

CHANGING FLUID

Removal Procedure

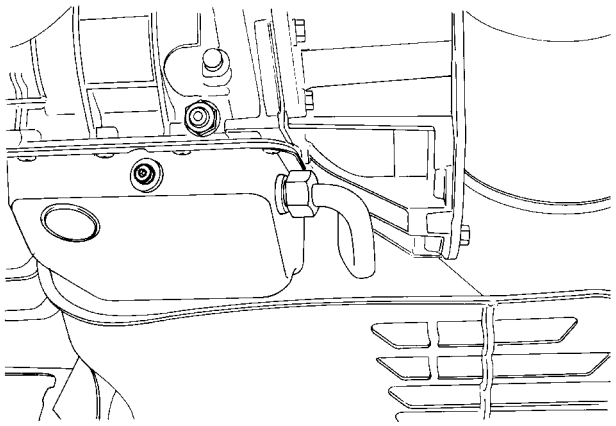

B103A041

1. Raise and suitably support the vehicle.
2. Place a drain pan under the transaxle.
3. Loosen the fluid pan drain plug. Drain the transaxle fluid.
4. Remove the fluid pan bolts. Remove the fluid pan and the fluid pan gasket. Refer to “Pan and Gasket” in this section.
5. Check the fluid pan flange for distortion. Straighten as needed.
6. Clean the fluid pan, the fluid pan gasket surfaces, and the fluid pan filter with a solvent. All traces of the old gasket material must be removed.
7. Air dry the fluid pan, the fluid pan surfaces that interface with the gasket, and the fluid pan filter.

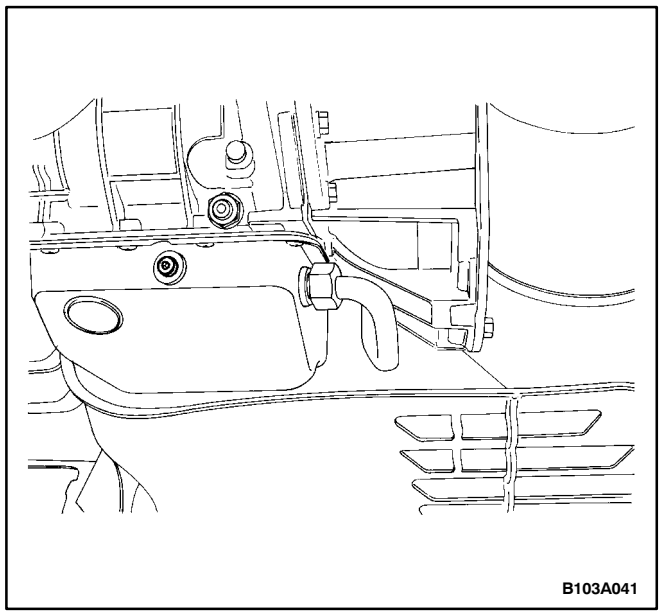

Installation Procedure

1. Install the fluid pan, using a new gasket. Refer to “Pan and Gasket” in this section.
2. Install the fluid pan drain plug.

   Tighten

   Tighten the fluid pan drain plug to 15 N•m (11 lb-ft).
3. Lower the vehicle.
4. Fill the transaxle with the proper quantity of automatic transaxle fluid. Refer to “Fluid Level Set After Service” in this section.
5. Check the fluid level. Refer to “Transaxle Fluid Level Checking Procedure” in this section.
6. Check the fluid pan for leaks. Refer to “Locating Fluid Leaks” in this section.

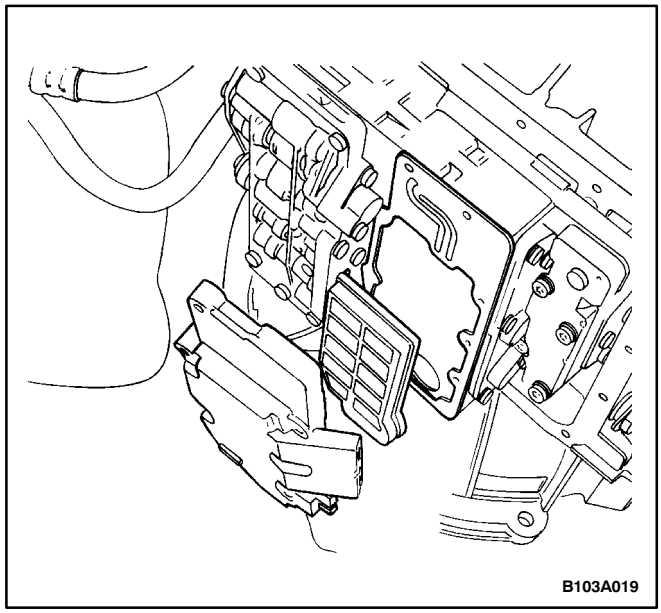

FLUID FILTER AND SEAL

Removal Procedure

1. Raise and suitably support the vehicle.
2. Remove the fluid pan and the gasket. Refer to “Pan and Gasket” in this section.
3. Remove the fluid filter housing cover, the fluid filter, and the fluid filter seal.

Inspection Procedure

Inspect the fluid filter screen and the fluid pan for metal particles, clutch facing material, rubber particles, and engine coolant. If contaminants are found, determine the source and correct it. Refer to “Position R – No Reverse”, “Position D – No Power”, “Noisy Operation and Sluggish Engagement After Long Trip,” and “Intake Noises From Fluid Pump” in this section.

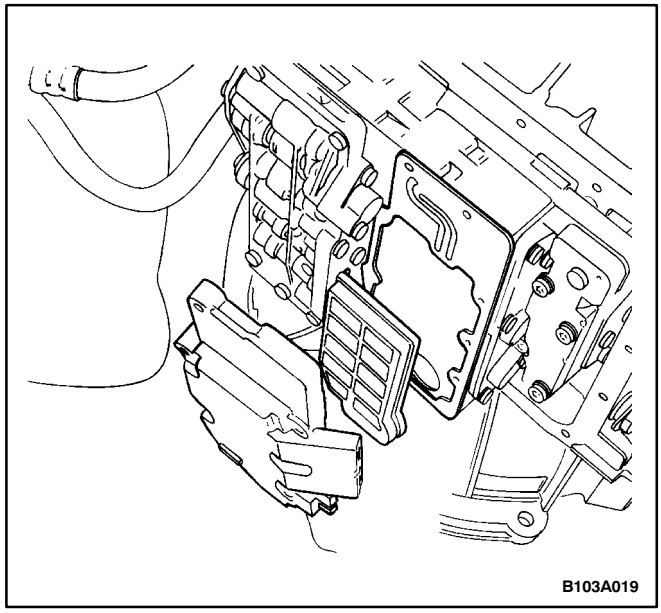

Installation Procedure

1. Install a new fluid filter seal, the fluid filter, and the fluid filter housing cover.
2. Install the fluid filter housing cover attaching bolts.

   Tighten

   Tighten the fluid filter housing cover attaching bolts to 8 N•m (71 lb-in).
3. Install the fluid pan gasket and the fluid pan. Refer to “Pan and Gasket” in this section.
4. Lower the vehicle.
5. Check the fluid level. Refer to “Transaxle Fluid Level Checking Procedure” in this section.

CASE POROSITY REPAIR

1. Determine the leak area. Refer to “Locating Fluid Leaks” in this section.
2. Clean the leak area with the solvent. Air dry.

Caution: Epoxy cement may cause skin irritations and eye damage. Read and follow all information on the container label as provided by the manufacturer.

3. Mix a sufficient amount of epoxy cement following the manufacturer’s recommendations.
4. While the transaxle case is hot, apply epoxy cement with a with a clean, dry soldering acid brush.
5. Allow the epoxy cement to cure for 3 hours before starting the engine.

FLUID COOLER FLUSHING

Flushing Procedure

1. Drain the fluid from the transaxle and refill the transaxle with the new transaxle fluid. Refer to “Changing Fluid” in this section.
2. Let the engine idle for 5 minutes.
3. Drain the fluid from the transaxle and refill the transaxle with the new transaxle fluid. Refer to “Changing Fluid” in this section.

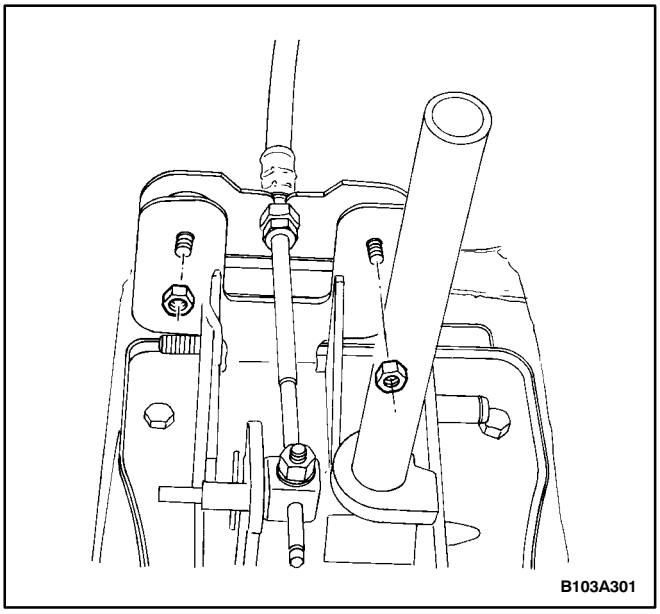

SHIFT CONTROL LEVER

(Left–Hand Drive Shown, Right–Hand Drive Similar)

Removal Procedure

1. Disconnect the negative battery cable.
2. Remove the right and the left front lower trim panels, the shift control panel, and the floor console. Refer to *Section 9G, Interior Trim*.
3. Remove the selector position switch.
4. Remove the nuts from the shift control cable mounting bracket at the front of the shift control assembly.

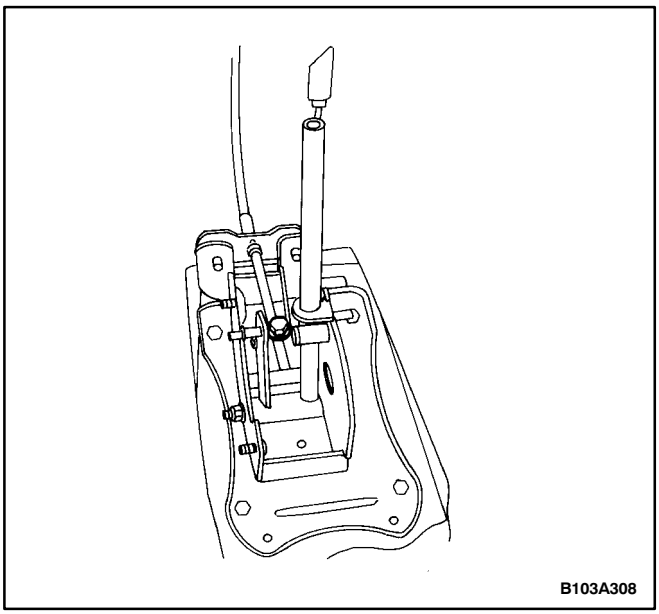

5. Loosen the nut on the shift control cable adjuster pinch bolt.

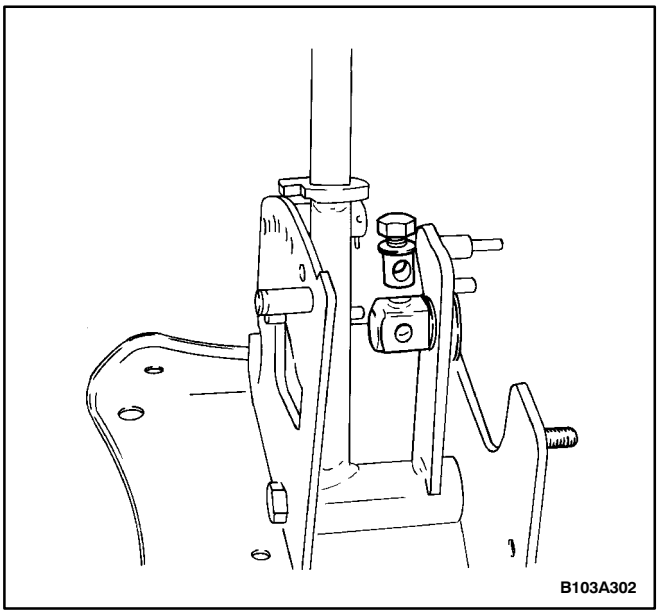

6. Slide the shift control cable out of the shift control cable adjuster and remove the pinch bolt.

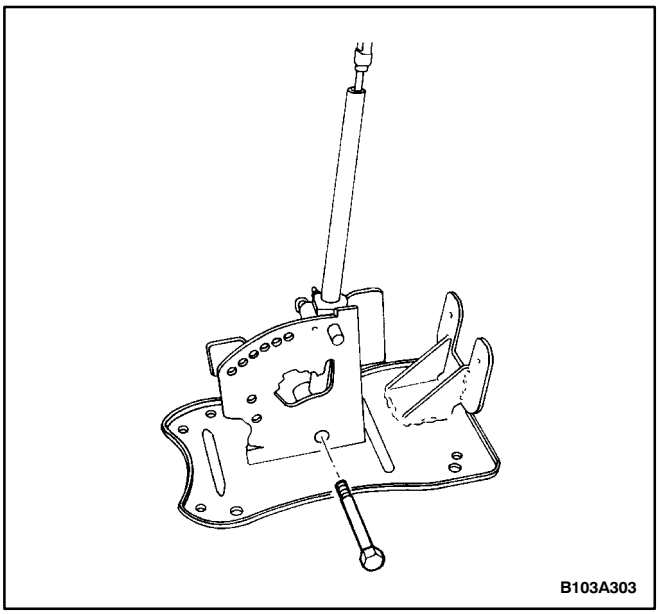

7. Remove the bolt from the bottom of the shift control lever.

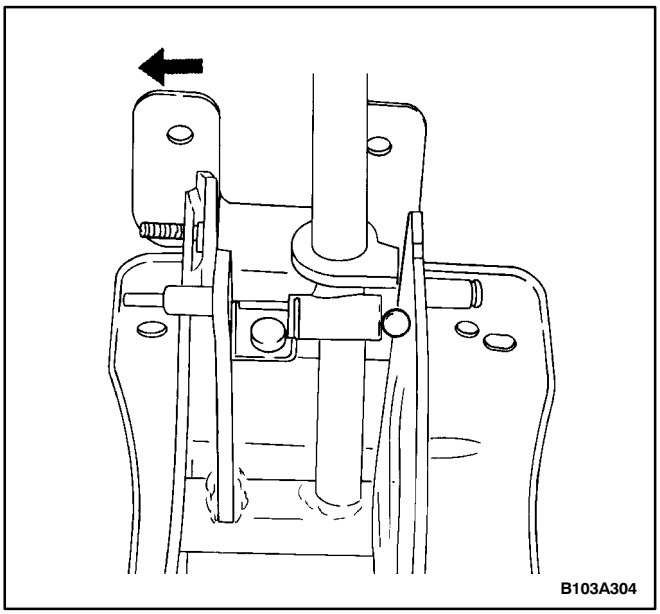

8. Tilt the shift control lever to the left side and remove the spring-loaded detent ball.

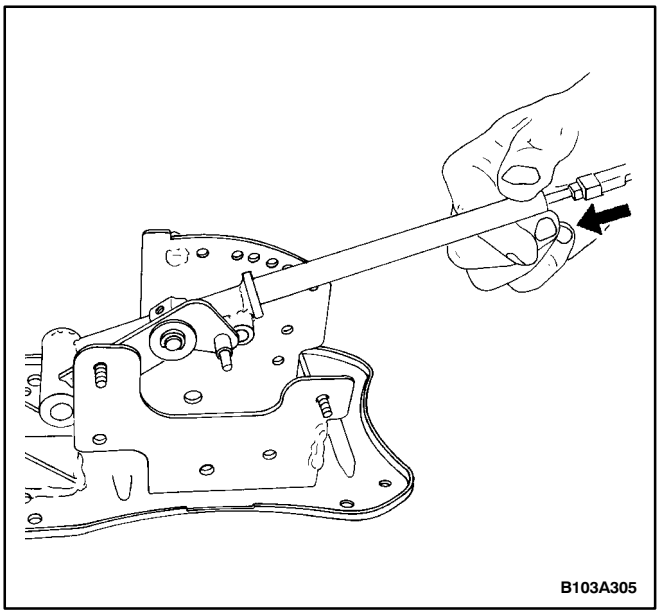

9. Remove the shift control lever by pressing the lock release button while pivoting the bottom of the shift control lever toward the front of the vehicle.

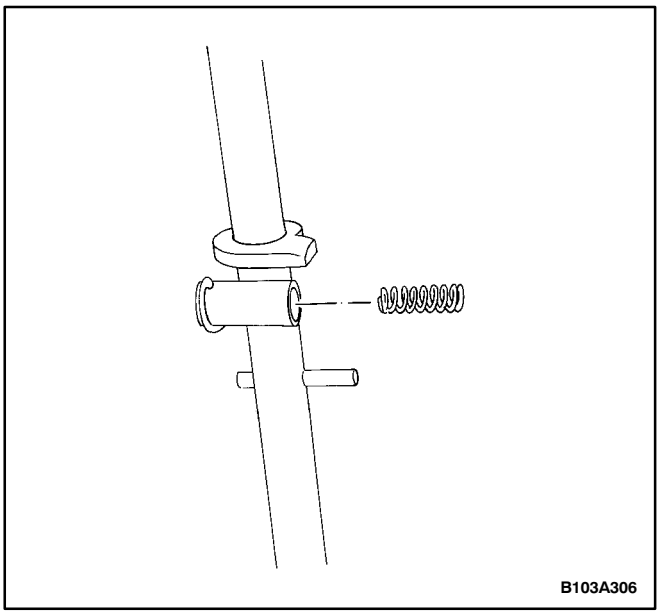

10. Slide the detent spring out of the shift control lever.

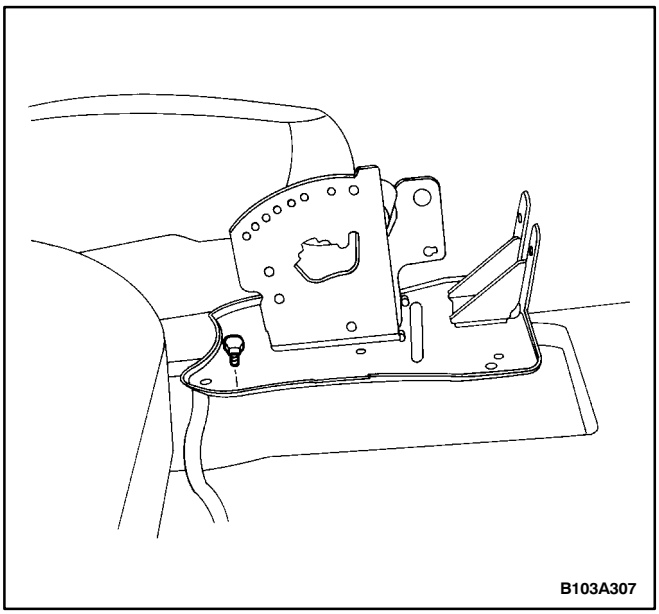

11. Remove the bolts holding the shift control assembly to the floor panel.
12. Remove the shift control assembly.

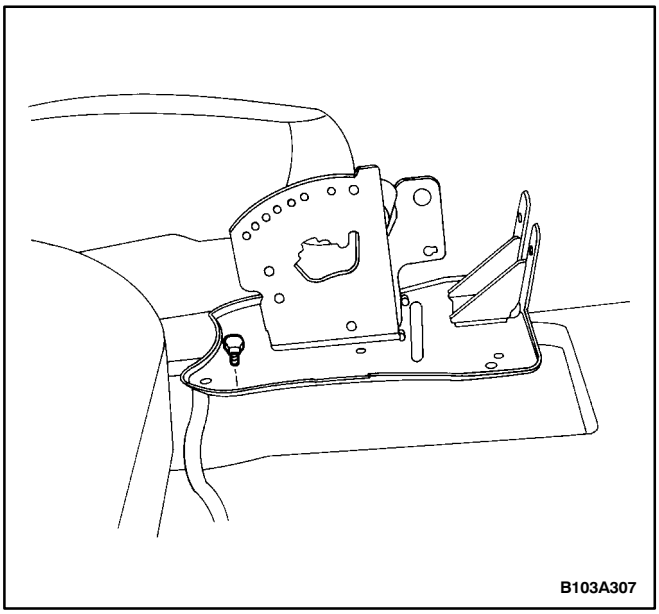

Installation Procedure

1. Install the shift control assembly in the floor panel with the bolts.

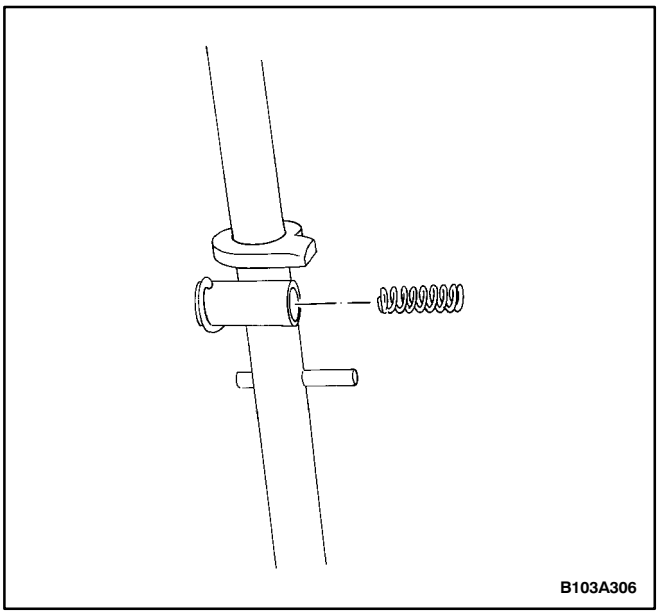

2. Install the detent spring into the shift control lever.

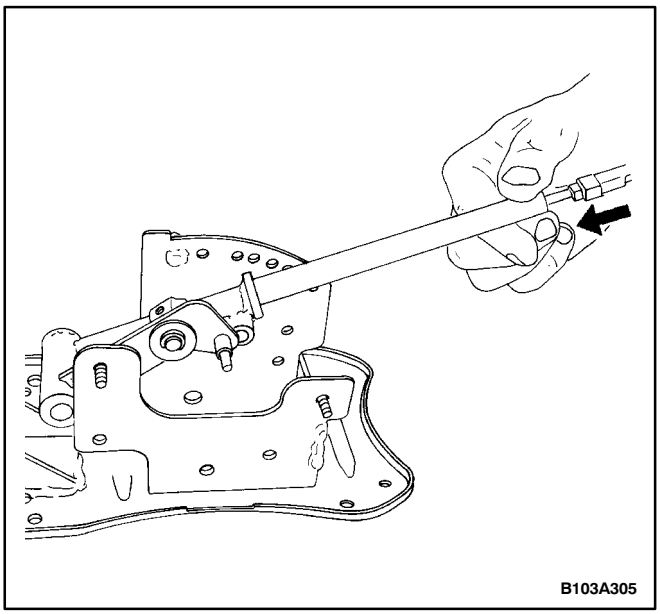

3. Install the shift control lever by pressing the lock release button while pivoting the bottom of the shift control lever toward the rear of the vehicle.

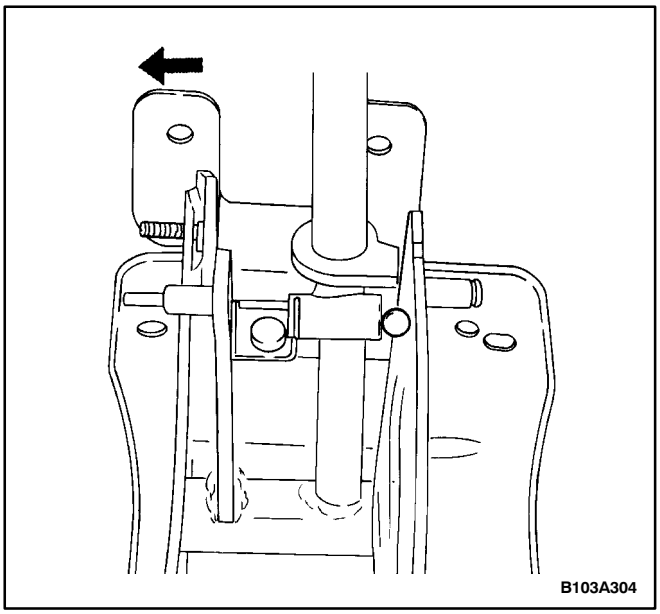

4. Tilt the shift control lever to the left and install the detent ball.

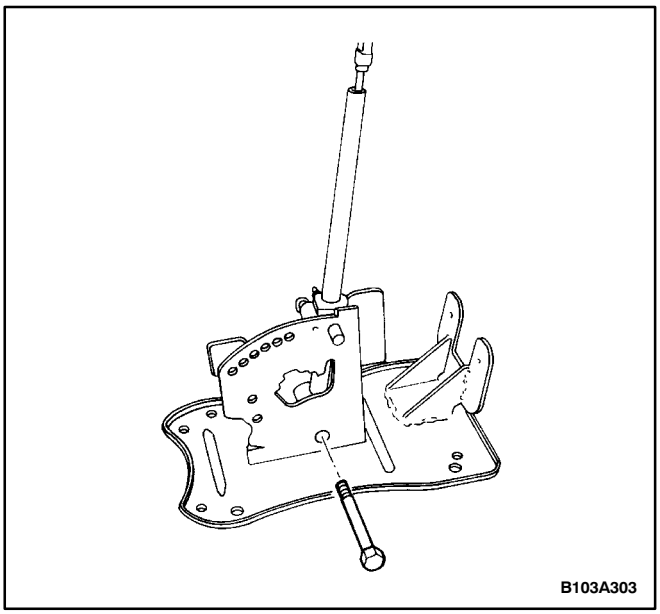

5. Install the bolt in the bottom of the shift control lever.

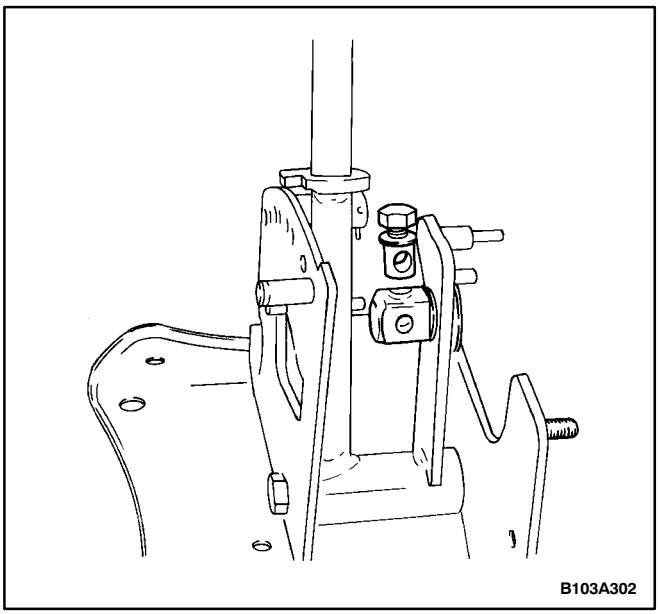

6. Insert the shift control cable adjuster pinch bolt into the shift control assembly and slide the shift control cable into the shift control cable adjuster.

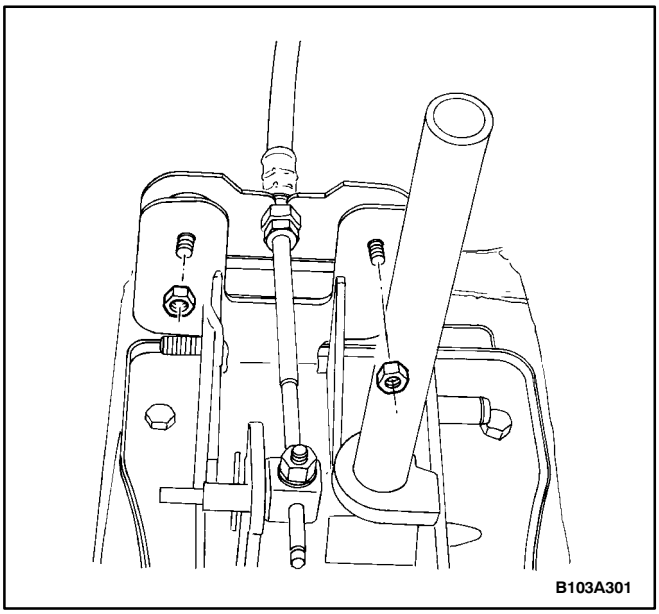

7. Attach the shift control cable mounting bracket to the shift control assembly with the nuts.

Tighten

Tighten the shift control cable mounting bracket nuts to 6 N•m (53 lb-in).

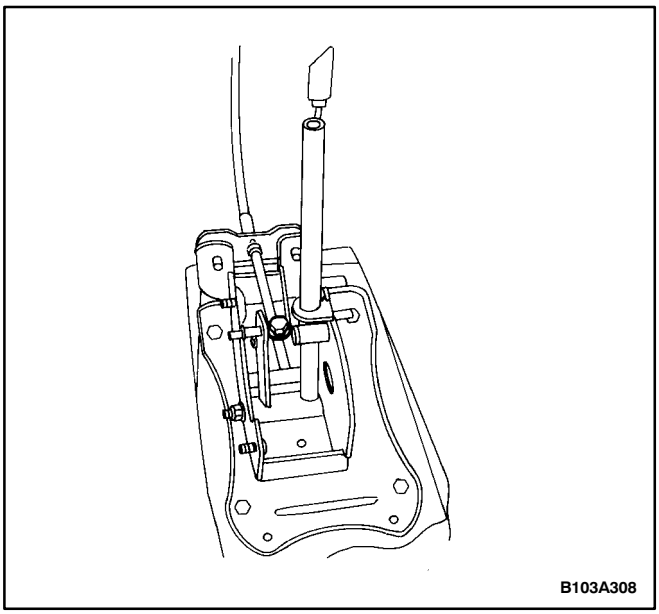

8. Install the nut on the shift control cable adjuster pinch bolt. Refer to “Control Cable Adjustment” in this section.

Tighten

Tighten the shift control cable adjuster pinch bolt nut to 8 N•m (71 lb-in).

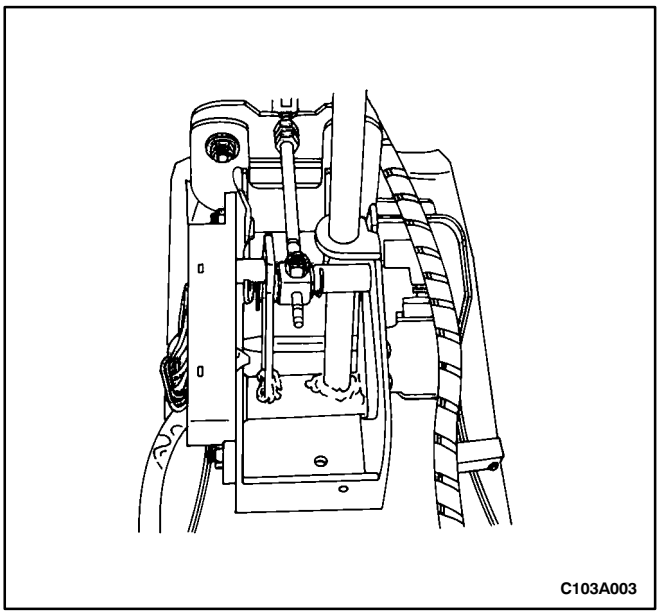

Notice: Make sure the slot in the selector position switch is all the way forward and the shift control lever is in the P position. Failure to do so may damage to the selector position switch and produce a false gear indication.

9. Install the selector position switch on the shift control assembly.
10. Install the floor console, the shift control panel, and the right and the left front lower trim panels. Refer to *Section 9G, Interior Trim*.
11. Connect the negative battery cable.

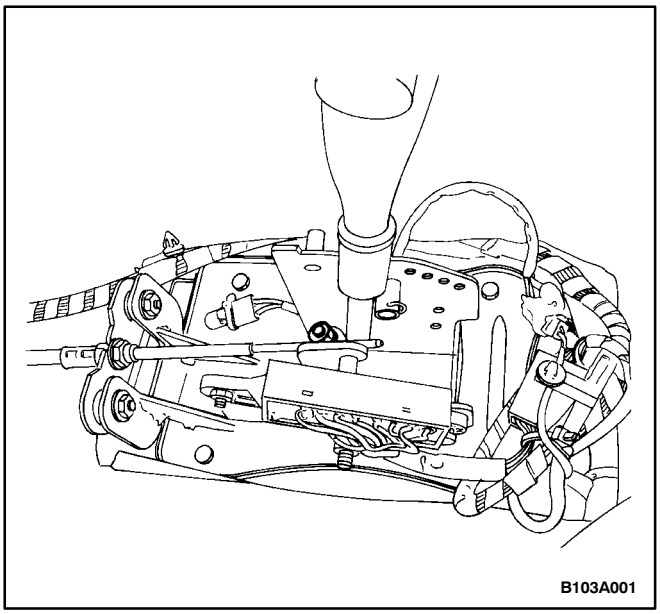

SHIFT CONTROL CABLE

(Left–Hand Drive Shown, Right–Hand Drive Similar)

Removal Procedure

1. Remove the battery and the battery tray.
2. Remove the right and the left front lower trim panels, the shift control panel, and the floor console. Refer to *Section 9G, Interior Trim*.
3. Loosen the pinch bolt nut on the shift control lever.

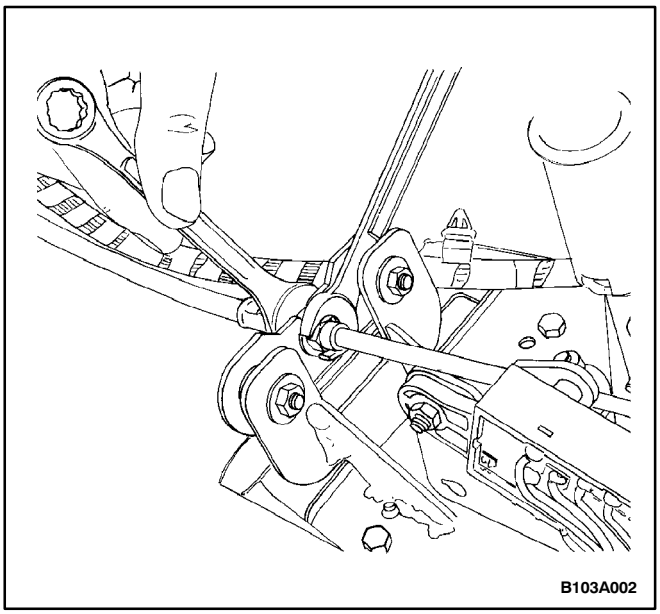

4. Remove the shift control cable from the shift control assembly by holding one nut while loosening the other one.

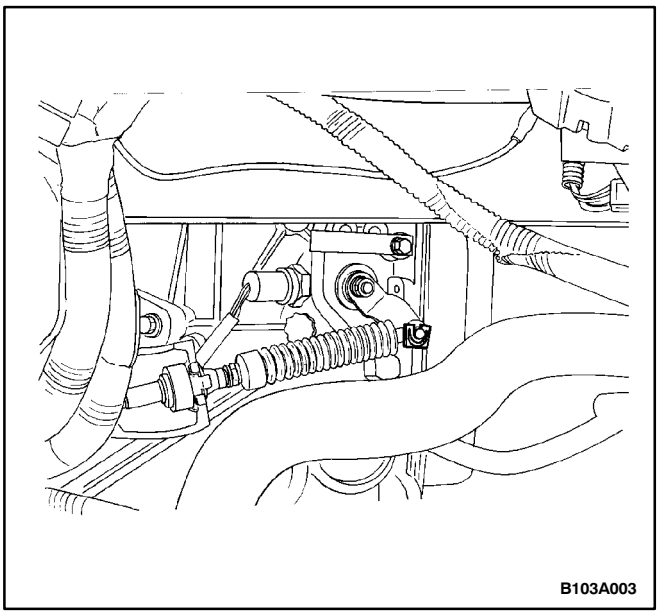

5. Remove the clip from the selector lever connection on the transaxle case and disconnect the shift control cable from the selector lever connection.

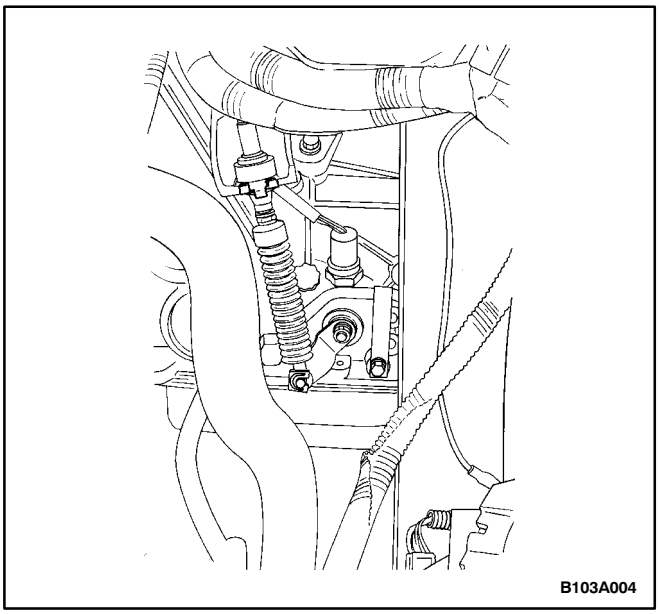

6. Remove the clip from the shift control cable at the transaxle mount connection.

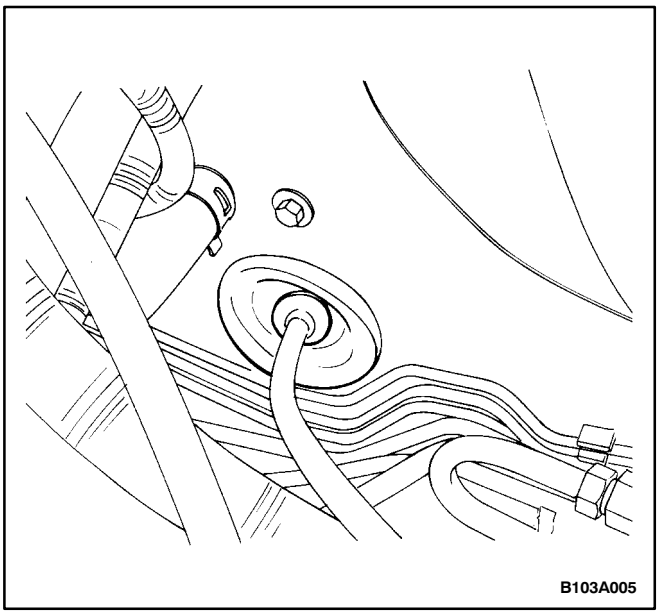

7. Remove the shift control cable from the transaxle mount.
8. Pull the shift control cable through the fire wall of the vehicle, bringing the rubber grommet with it.

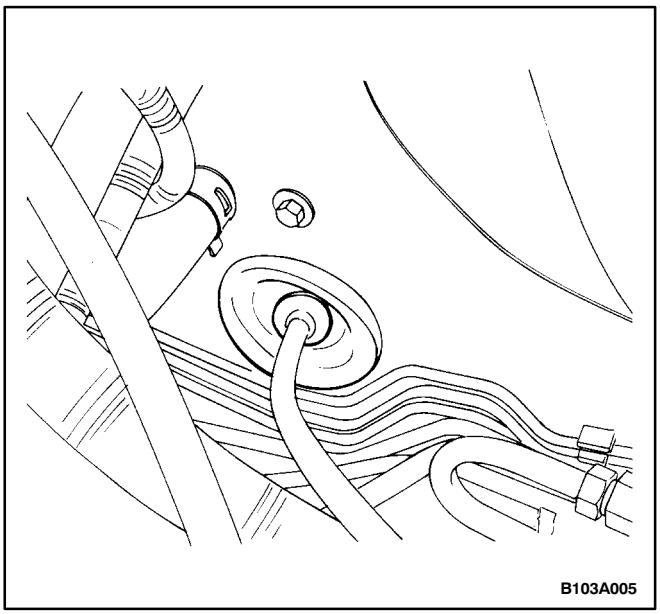

Installation Procedure

1. Push the shift control cable through the fire wall of the vehicle.
2. Install the rubber grommet into the fire wall.

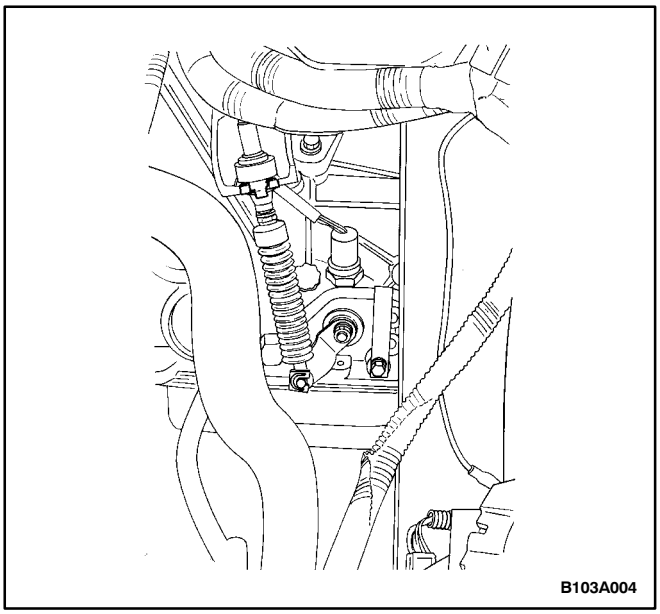

3. Install the shift control cable into the transaxle mount.
4. Install the clip onto the shift control cable at the transaxle mount connection.

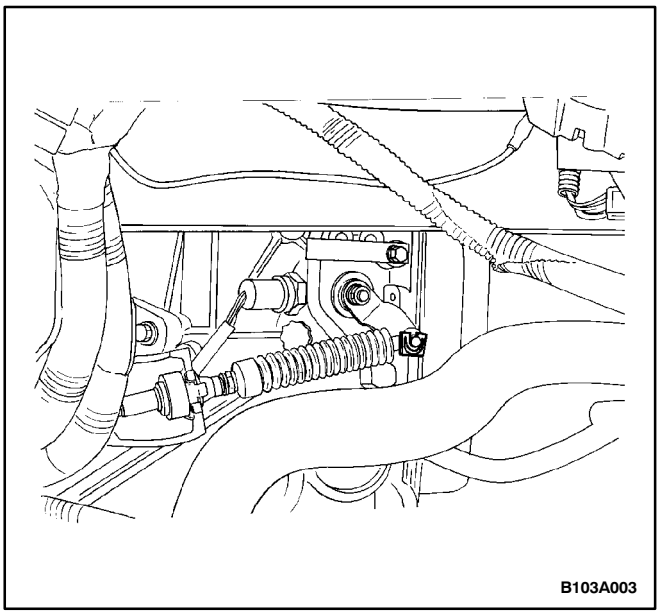

5. Connect the shift control cable onto the selector lever connection.

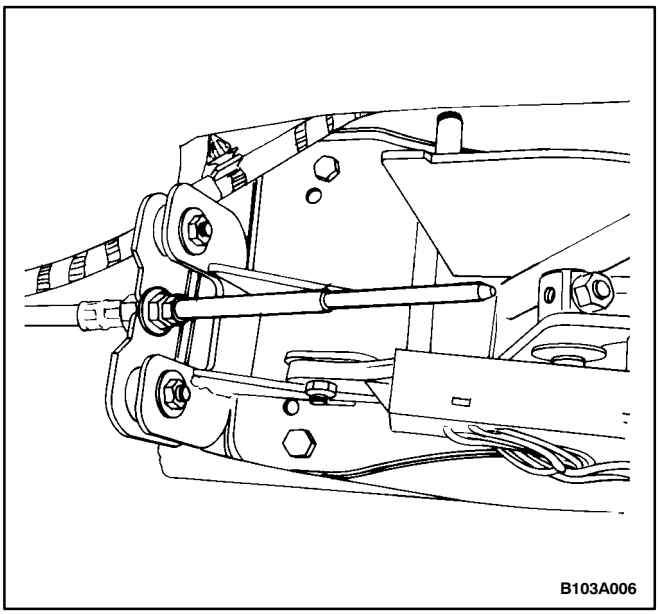

6. Install the clip onto the shift control cable at the selector lever connection on the transaxle case.
7. Install the brass housing and the nut onto the opposite end of the shift control cable.

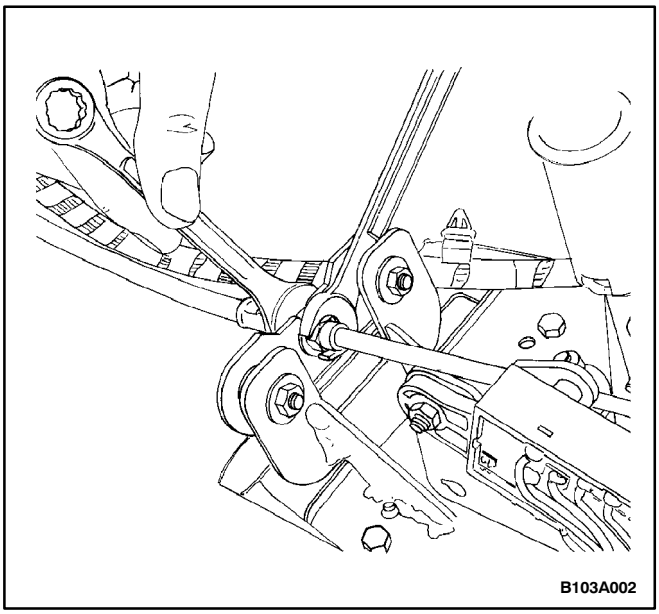

8. Install the shift control cable into the shift control assembly.
9. Install the shift control attachment nut onto the shift control assembly.

Tighten

Tighten the shift control cable attachment nut to 6 N•m (53 lb-in).

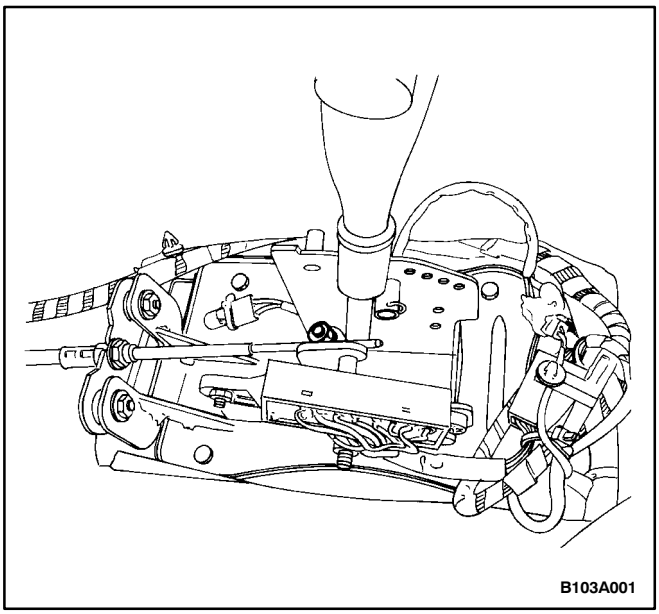

Important: Be sure the shift control lever is in the P position and the selector lever selector is all the way forward before connecting the shift control cable to the shift control lever.

10. Insert the shift control cable into the connecting slot on the shift control lever and secure it with the pinch bolt and nut.

Tighten

Tighten the shift control cable adjustment pinch bolt nut to 8 N•m (71 lb-in).

11. Install the floor console, the shift control panel, and the right and the left front lower trim panels. Refer to *Section 9G, Interior Trim*.
12. Install the battery and the battery tray.

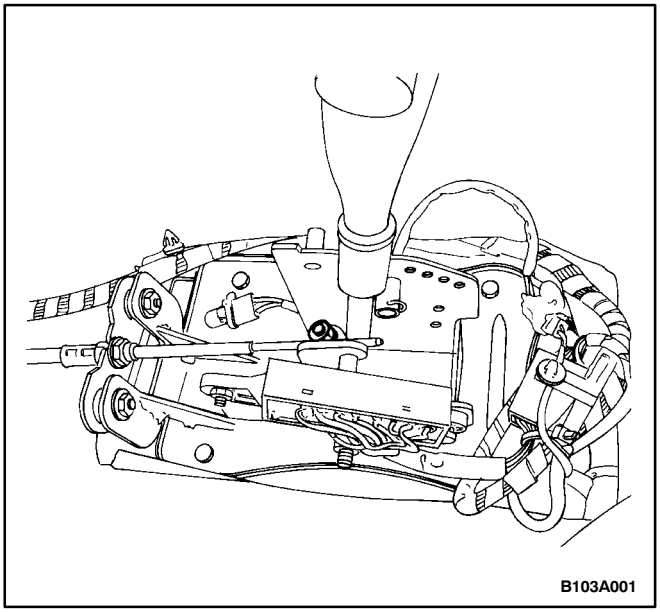

CONTROL CABLE ADJUSTMENT

(Left–Hand Drive Shown, Right–Hand Drive Similar)

Adjustment Procedure

It is very important to match the shift control lever correctly with the selector lever connection. Place the shift control lever in the P position and check the selector lever connection to see if it is all the way forward. If it is not, proceed with the following adjustment.

1. Remove the battery and the battery tray.
2. Remove the right and the left front lower trim panels, the shift control panel, and the floor console. Refer to *Section 9G, Interior Trim*.
3. Place the shift control lever in the P position.
4. Loosen the pinch bolt nut on the shift control lever.

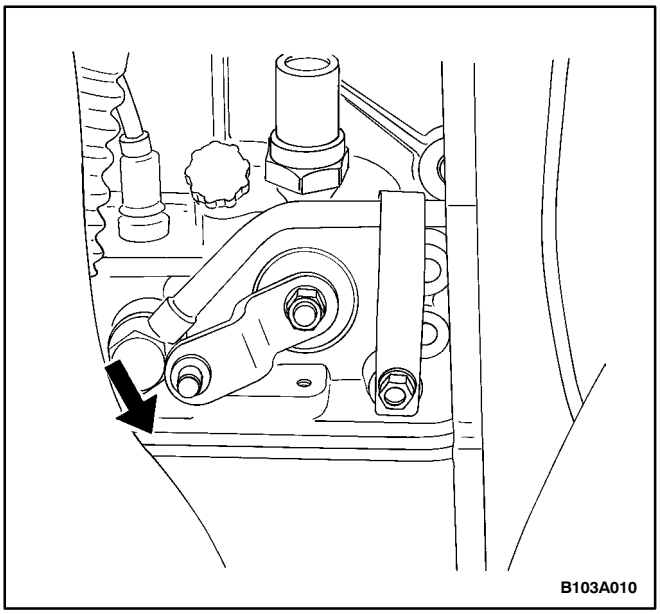

5. Place the selector lever connection all the way forward on the transaxle case.

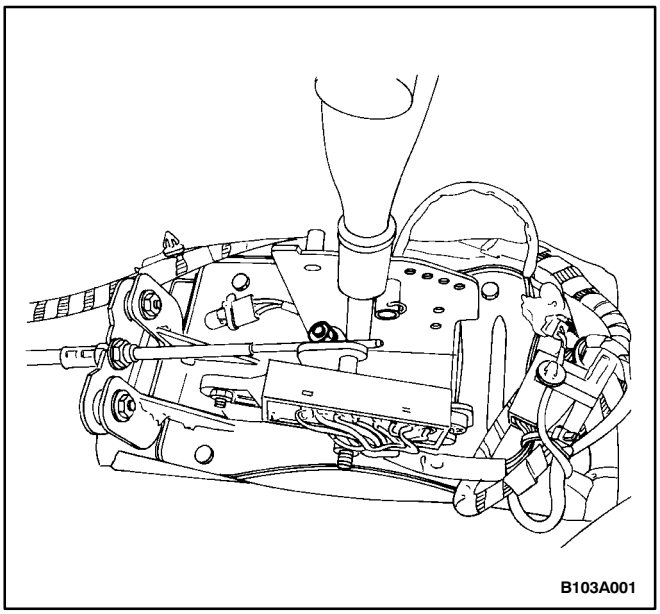

6. Insert the shift control cable into the shift control lever tightly.
7. Secure the shift control cable with the shift control cable adjuster pinch bolt and nut.

   Tighten

   Tighten the shift control cable adjuster pinch bolt nut to 8 N•m (71 lb-in).
8. Install the floor console, the shift control panel, and the right and the left front lower trim panels. Refer to *Section 9G, Interior Trim*.
9. Install the battery and the battery tray.

THROTTLE VALVE CABLE

Removal Procedure

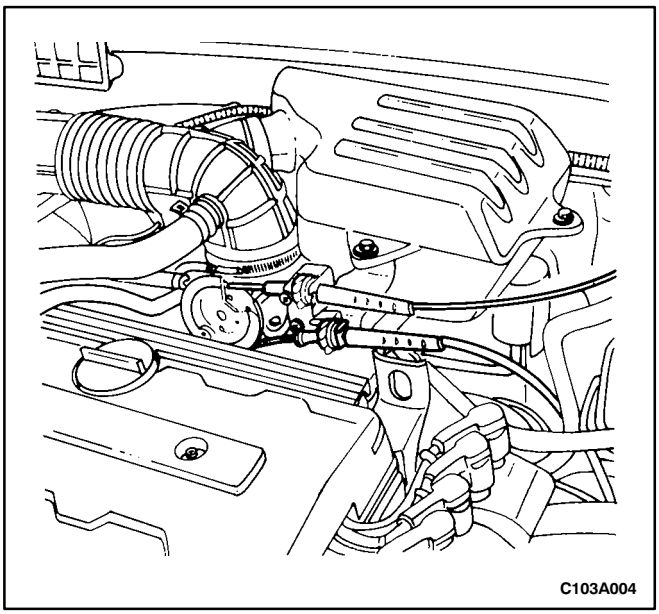

1. Disconnect and remove the battery and the battery tray.
2. Remove the upper cable stop from the throttle cable wheel.

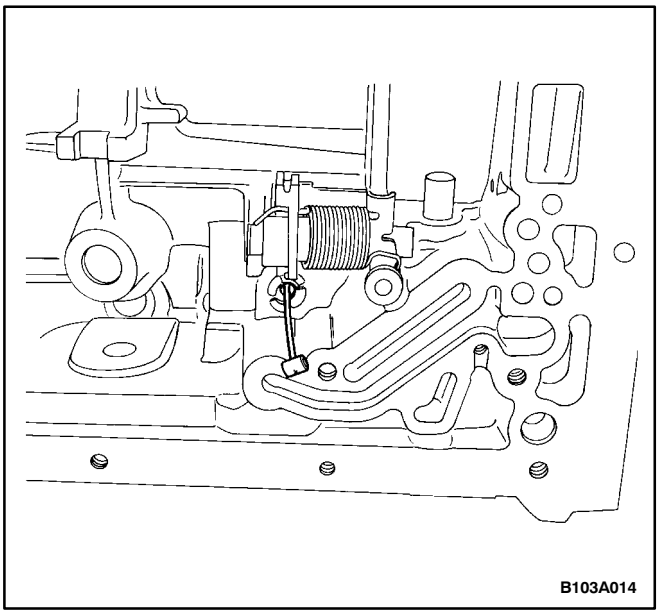

3. Raise and suitably support the vehicle.
4. Remove the fluid pan and the gasket. Refer to “Pan and Gasket” in this section.
5. Remove the valve body. Refer to “Valve Body” in this section.
6. Turn the throttle valve cable cam and remove the cable stop from the cam.

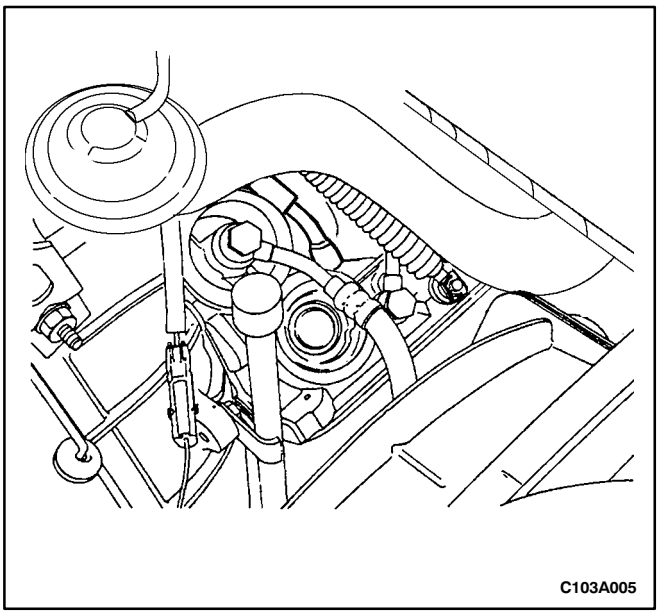

7. Lower the vehicle.
8. Remove the throttle valve cable from the transaxle case.

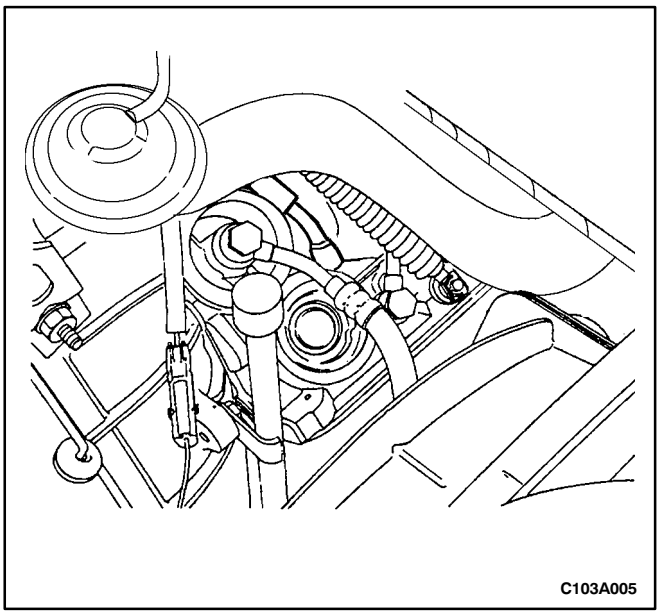

Installation Procedure

1. Install the throttle valve cable into the transaxle case.

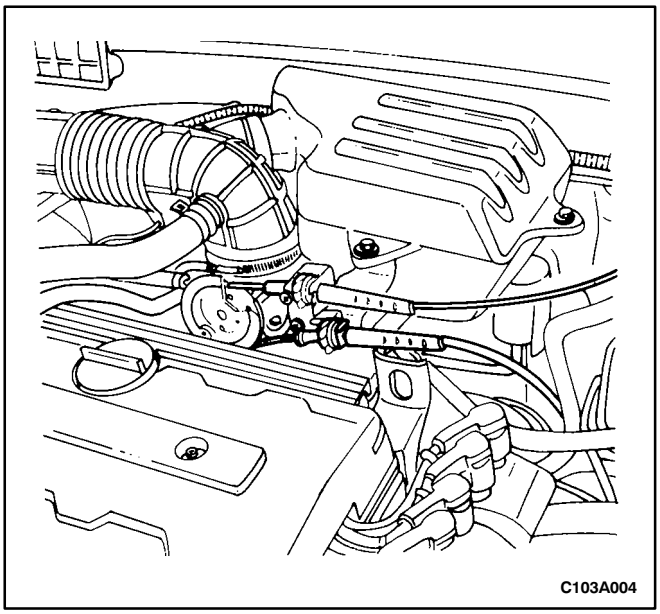

2. Connect the upper cable stop to the throttle cable wheel.

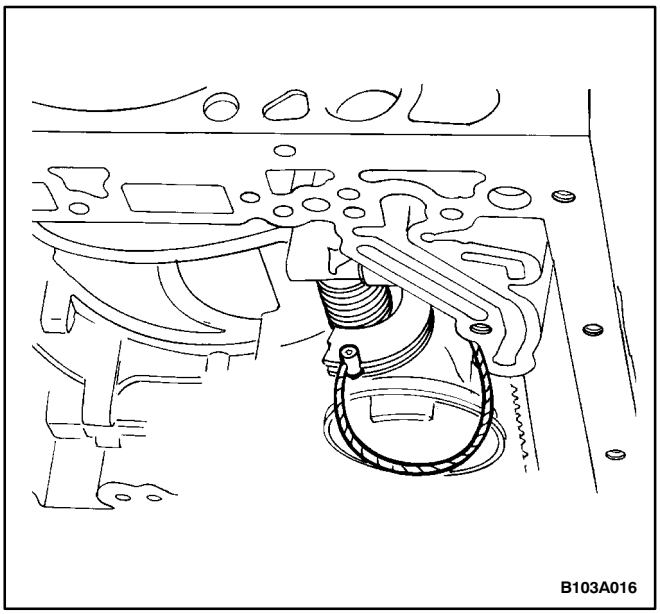

3. Raise the vehicle.
4. Turn the cable cam once to allow for a spring load and fit the lower cable stop into the cam seat.
5. Install the valve body. Refer to “Valve Body” in this section.
6. Install the lower fluid pan and the gasket. Refer to “Pan and Gasket” in this section.
7. Lower the vehicle.
8. Install the battery tray and the battery and connect the battery.

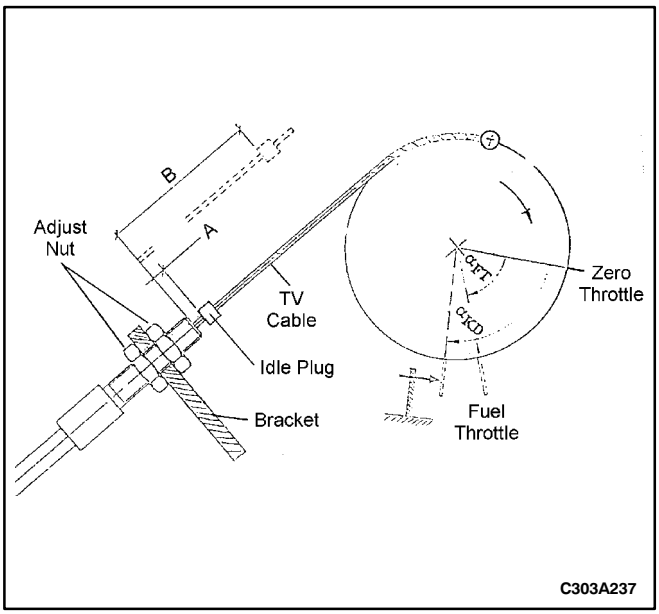

ADJUCT THROTTLE VALVE CABLE

Removal Procedure

1. Adjust the gap (“A”) between idle plug and end of adjusting thread.

   Specification : 0 ~ 1 mm
2. Full the throttle valve cable to full throttle position.

   Specification : 39.0 ~ 40 mm
3. If the stroke were out of spec adjust using adjust nuts.

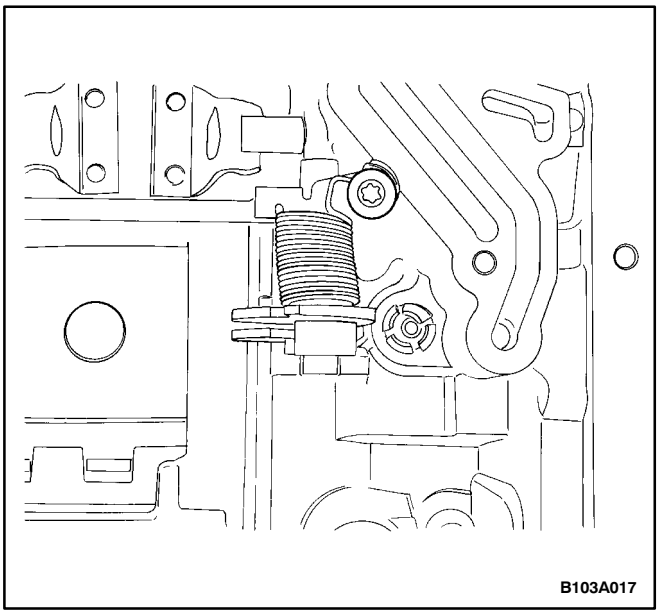

THROTTLE VALVE CABLE CAM

Removal Procedure

1. Raise and suitably support the vehicle.
2. Remove the fluid pan. Refer to “Pan and Gasket” in this section.
3. Remove the valve body. Refer to “Valve Body and Converter” in this section.
4. Remove the throttle valve cable from the cam. Refer to “Throttle Valve Cable” in this section.
5. Remove the detent screw holding the cam onto the transaxle case and remove the throttle valve cable cam.

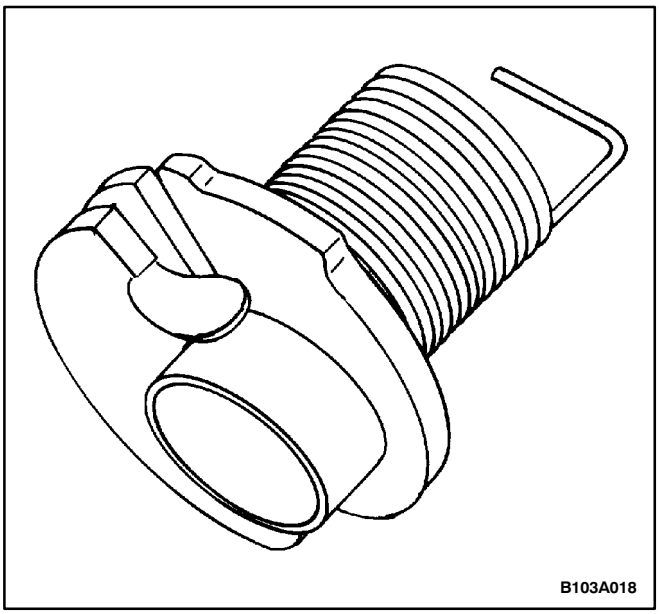

6. Remove the spring from the body of the cam.

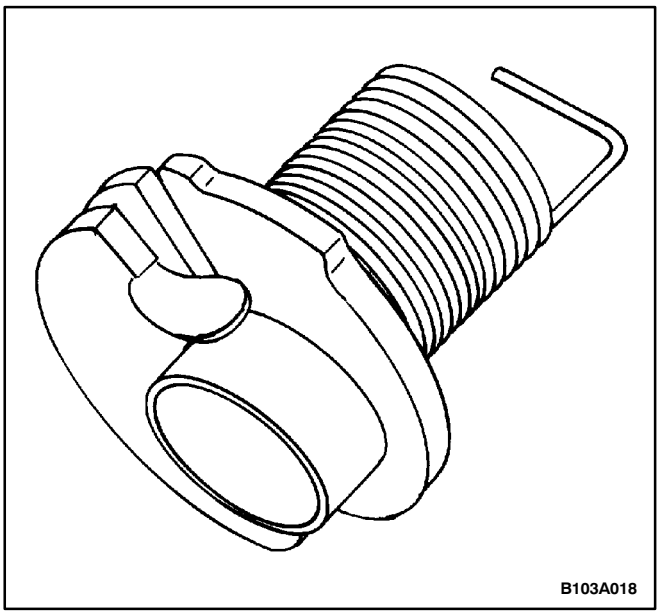

Installation Procedure

1. Install the spring onto the body of the throttle valve cable cam.

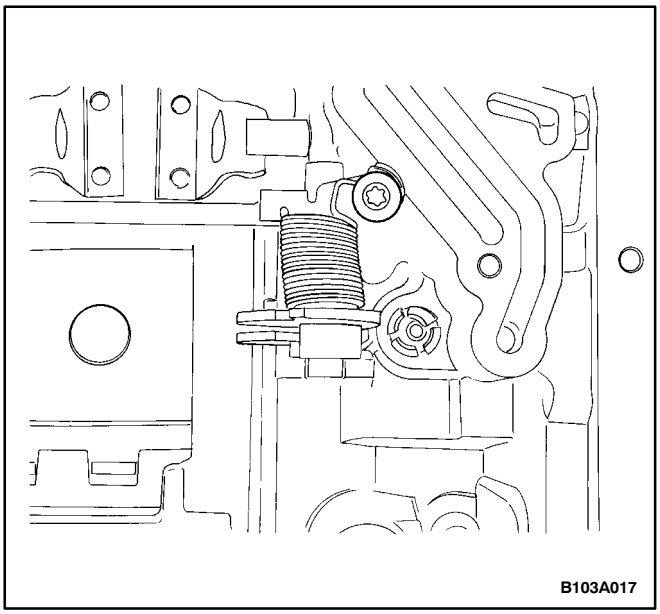

2. Install the throttle valve cable cam and secure it to the transaxle case with the detent screw.

   Tighten

   Tighten the throttle valve cable cam detent screw to 10 N•m (89 lb-in).
3. Install the throttle valve cable. Refer to “Throttle Valve Cable” in this section.
4. Install the valve body. Refer to “Valve Body and Converter” in this section.
5. Install the fluid pan. Refer to “Pan and Gasket” in this section.
6. Lower the vehicle.

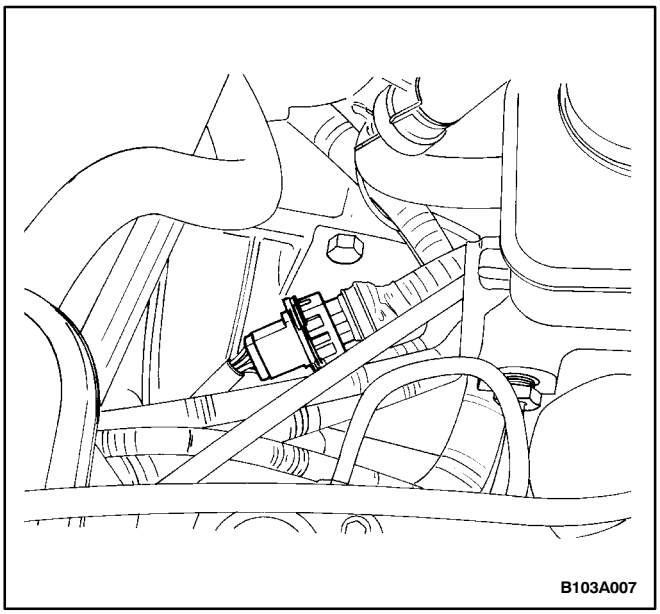

NEUTRAL START SWITCH

Removal Procedure

1. Disconnect the negative battery cable.
2. Disconnect the neutral start switch from the wiring harness.

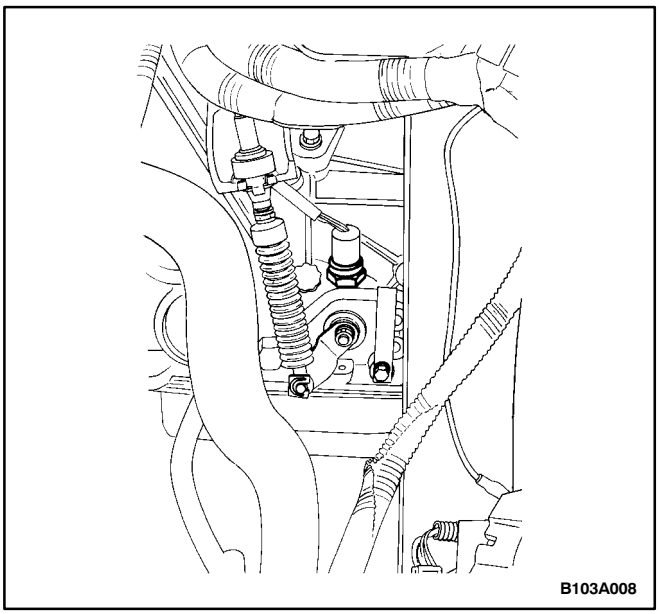

3. Loosen the connecting nut of the neutral start switch on the transaxle case.
4. Remove the neutral start switch.

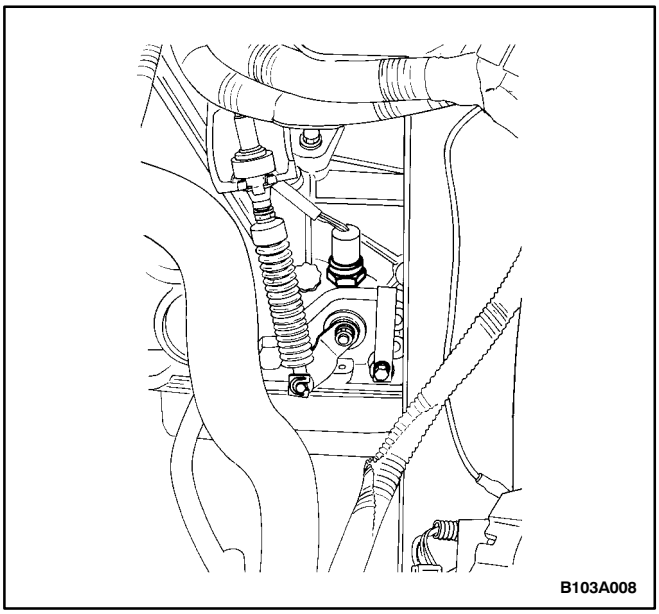

Installation Procedure

1. Install the neutral start switch and secure it to the transaxle case with the connecting nut.

Tighten

Tighten the neutral start switch connecting nut to 40 N•m (30 lb-ft).

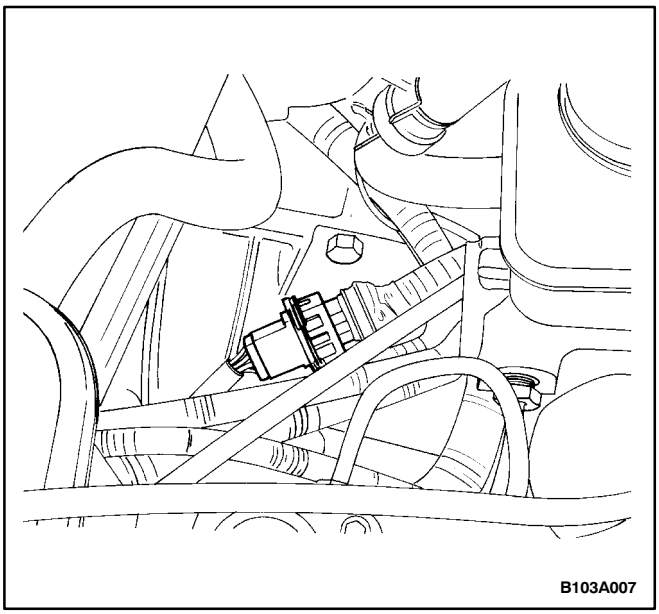

2. Connect the neutral start switch to the wiring harness.
3. Connect the negative battery cable.

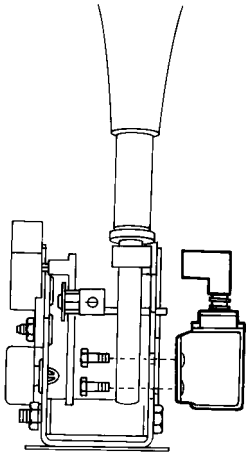

C103A006

BRAKE TRANSAXLE SHIFT INTERLOCK

(Left–Hand Drive Shown, Right–Hand Drive Similar)

Removal Procedure

1. Disconnect the negative battery cable.
2. Remove the center console. Refer to *Section 9G, Interior Trim.*
3. Disconnect the electrical connector from the shift interlock solenoid.
4. Remove the shift interlock solenoid bolts and remove the shift interlock solenoid.

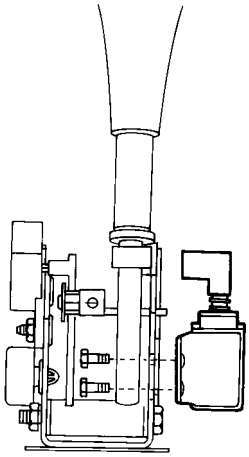

C103A006

Installation Procedure

1. Install the shift interlock solenoid and the shift interlock solenoid bolts.

   Tighten

   Tighten the shift interlock solenoid bolts to 8 N•m (71 lb-in).
2. Connect the electrical connector to the shift interlock solenoid.
3. Install the center console. Refer to *Section 9G, Interior Trim.*
4. Connect the negative battery cable.

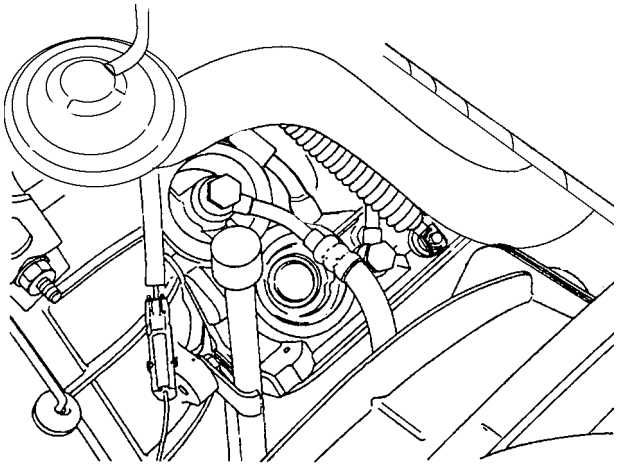

C103A007

FLUID FILLER TUBE

Removal Procedure

1. Disconnect and remove the battery and the battery tray.
2. Raise and suitably support the vehicle.
3. Drain the fluid out of the transaxle. Refer to “Changing Fluid” in this section.
4. Remove the upper fluid filler tube attachment bolt.

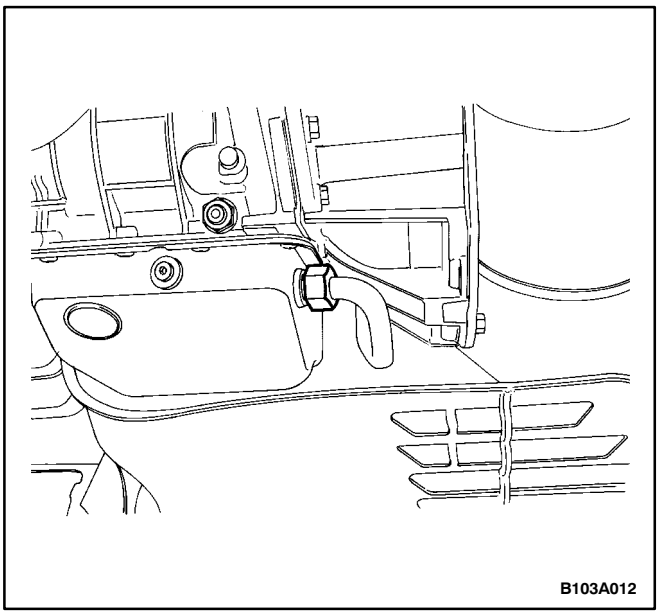

5. Remove the lower fluid filler attachment nut and remove the fluid filler tube.

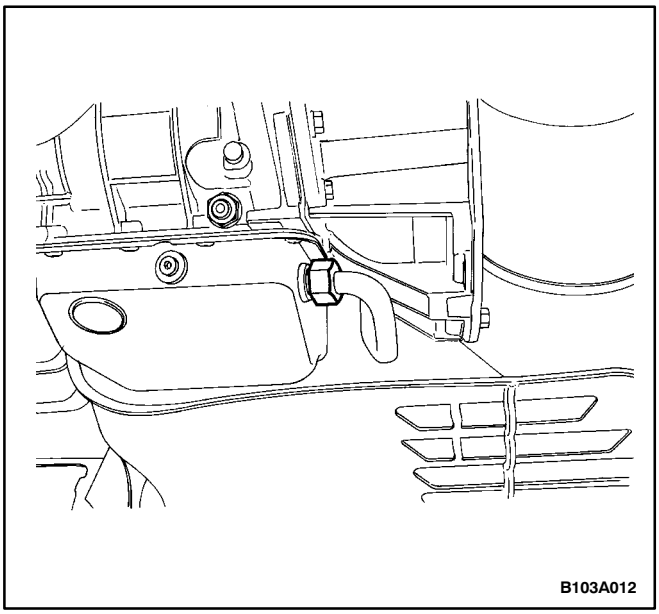

Installation Procedure

1. Install the fluid filler tube with the lower fluid filler tube attachment nut.

   Tighten

   Tighten the lower fluid filler tube attachment nut to 15 N•m (11 lb-ft).

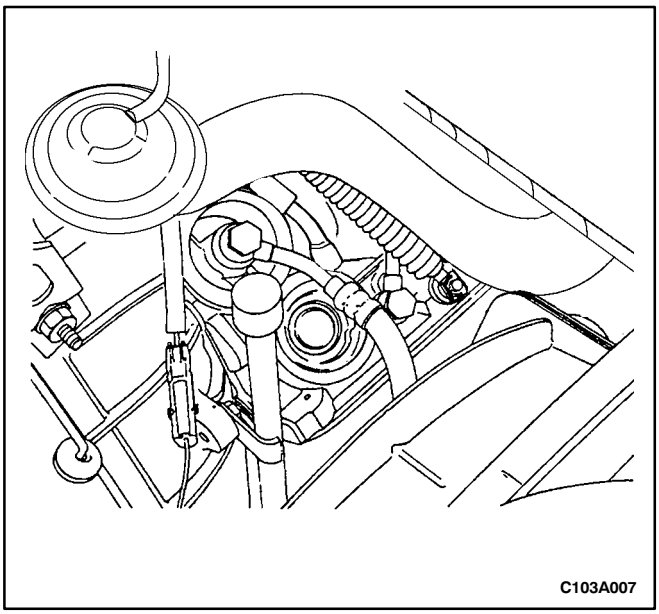

2. Install the upper fluid filler tube attachment bolt.

   Tighten

   Tighten the upper fluid filler tube attachment bolt to 20 N•m (15 lb-ft).
3. Lower the vehicle.
4. Refill the transaxle with the appropriate amount of automatic transaxle fluid. Refer to “Fluid Level Set After Service” in this section.
5. Install the battery tray and the battery.

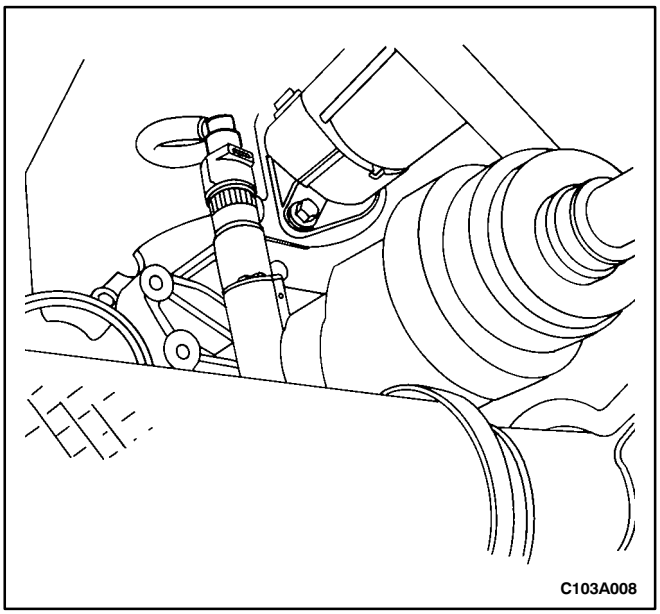

SPEED SENSOR

Removal Procedure

1. Disconnect the negative battery cable.
2. Raise and suitably support the vehicle.
3. Remove the speed sensor electrical connector.

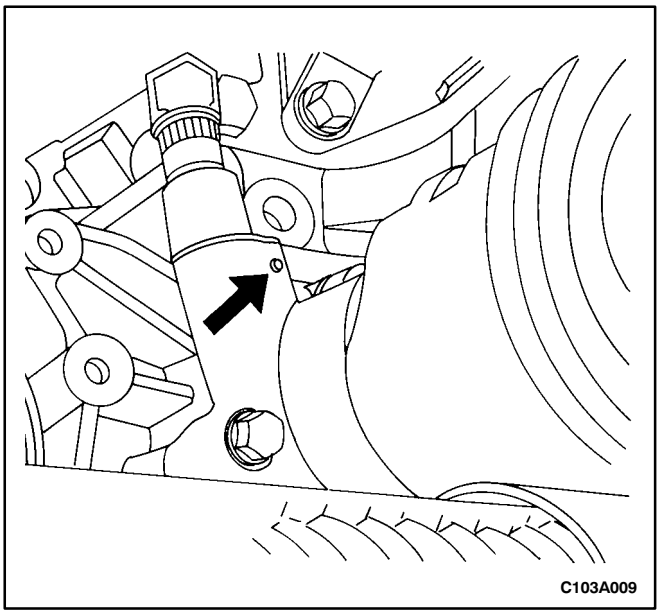

4. Remove the speed sensor from the extension case by removing the roll pin.

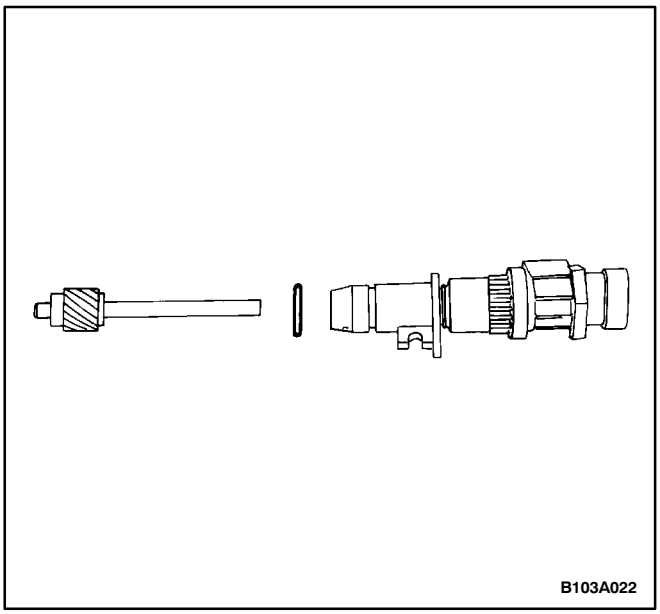

5. Remove the O-ring from the speed sensor.

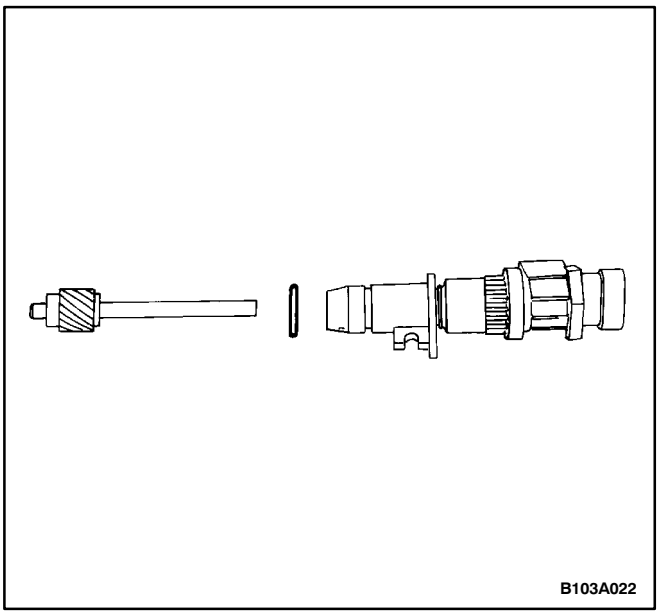

Installation Procedure

1. Install the O-ring onto the speed sensor.

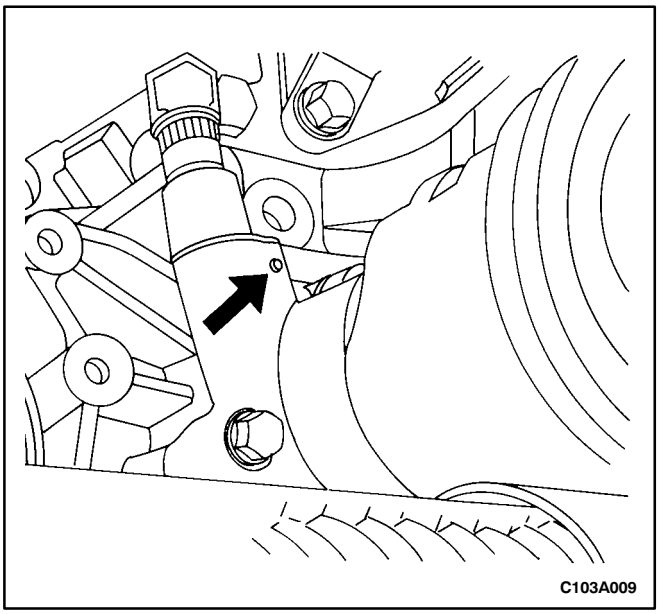

2. Install the speed sensor into the extension case and secure it with a roll pin.

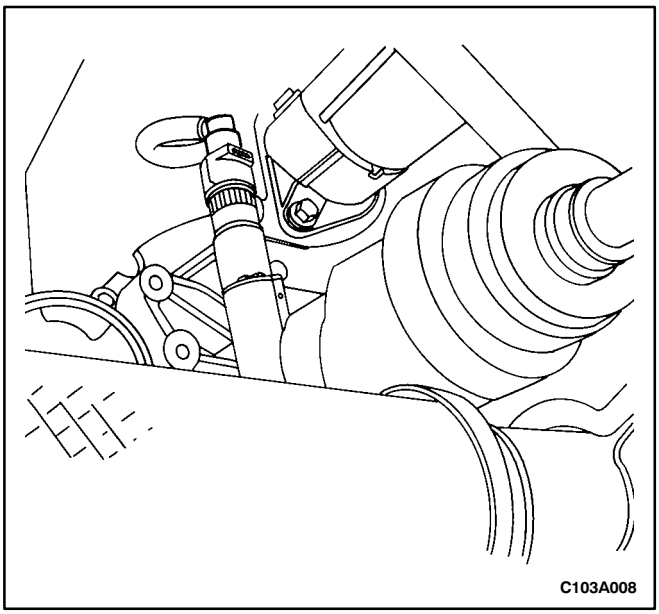

3. Install the speed sensor electrical connector.
4. Lower the vehicle.
5. Connect the negative battery cable.

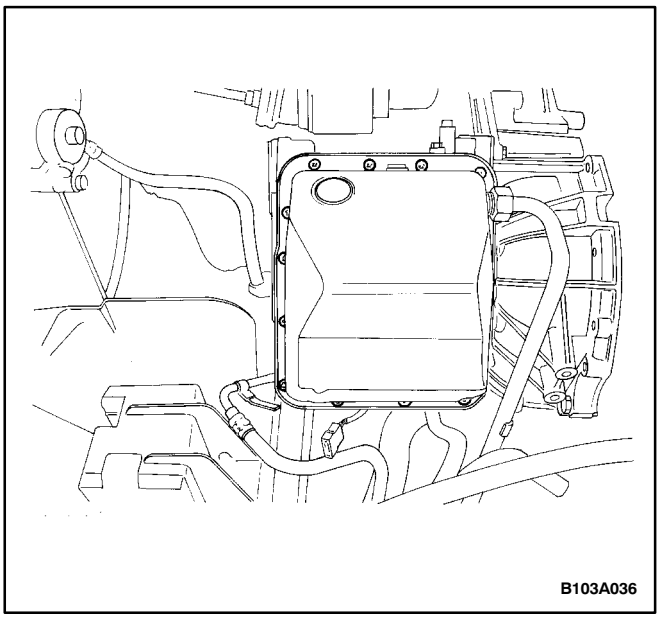

PAN AND GASKET

Removal Procedure

1. Raise and suitably support the vehicle.
2. Remove the engine under covers. Refer to *Section 9N, Frame and Underbody.*
3. Drain the transaxle fluid from the transaxle. Refer to “Changing Fluid” in this section.

Notice: Take care not to damage the mating surfaces of the fluid pan and the case. Such damage can result in fluid leaks in this area.

4. Remove the fluid pan connecting bolts.
5. Remove the fluid pan and gasket.

Inspection Procedure

Inspect the fluid pan for metal particles, clutch facing material, rubber particles, and engine coolant. Inspect the pan flange for distortion. Correct as needed.

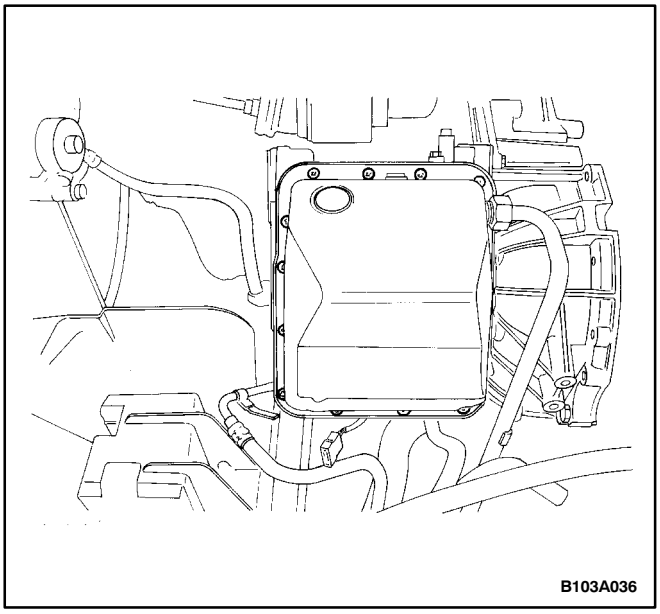

Installation Procedure

1. Install the new transaxle pan gasket.
2. Install the fluid pan with the fluid pan connecting bolts.

   ### Tighten

   Tighten the fluid pan connecting bolts to 10 N•m (89 lb-in).

3. Install the engine under covers. Refer to *Section 9N, Frame and Underbody.*
4. Lower the vehicle.
5. Refill the transaxle with the appropriate amount of automatic transaxle fluid. Refer to “Fluid Level Set After Service” in this section.
6. Check the fluid level. Refer to “Transaxle Fluid Level Checking Procedure” in this section.

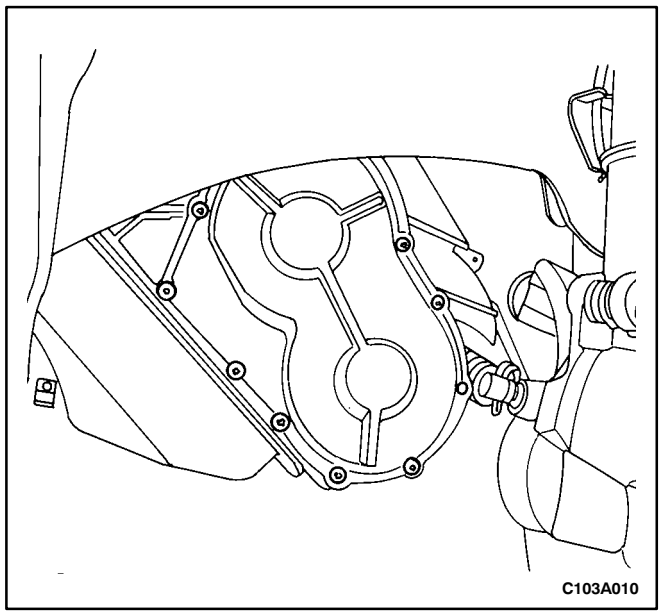

CASE SIDE COVER PAN AND GASKET

Removal Procedure

1. Raise and suitably support the vehicle.
2. Remove the left tire and wheel assembly. Refer to *Section 2E, Tires and Wheels*.
3. Drain the fluid from the transaxle. Refer to “Changing Fluid” in this section.
4. Remove the side cover pan connecting bolts.
5. Remove the side cover pan and the gasket.

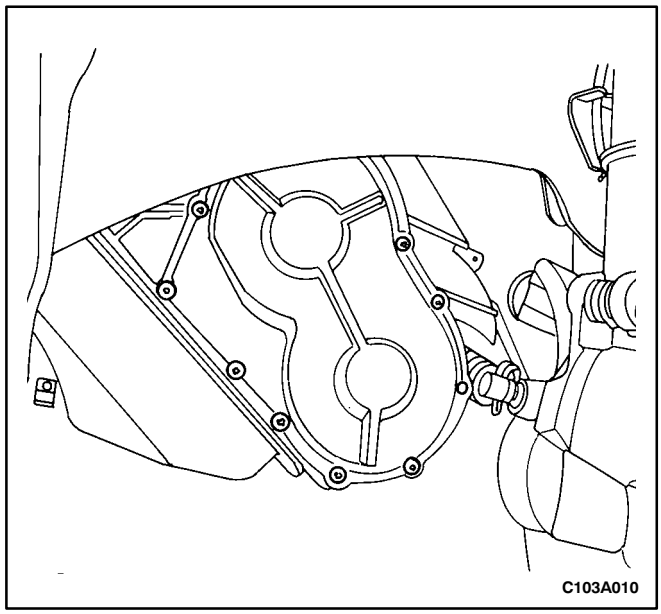

Installation Procedure

1. Install a new side cover pan gasket.
2. Install the side cover pan with the connecting bolts.

   Tighten

   Tighten the side cover pan connecting bolts to 10 N•m (89 lb-in).
3. Replace the automatic transaxle fluid. Refer to “Fluid Level Set After Service” in this section.
4. Lower the vehicle.

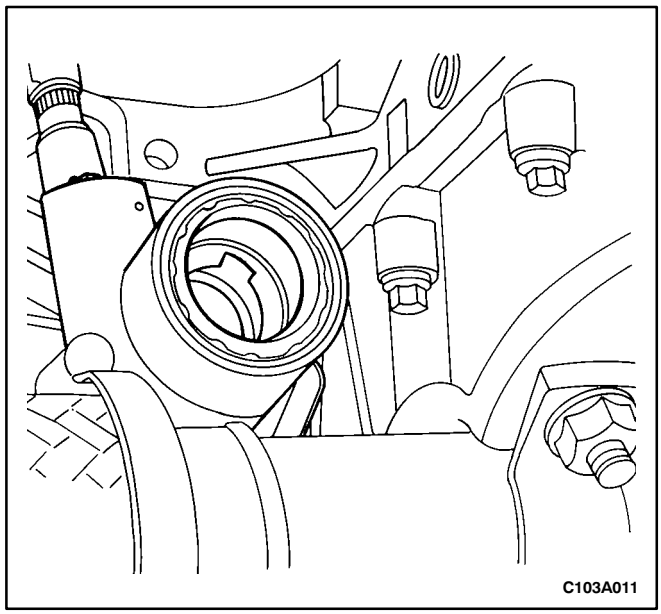

CASE EXTENSION HOUSING

Removal Procedure

1. Disconnect the negative battery cable.
2. Disconnect the vehicle speed sensor connection. Refer to “Speed Sensor” in this section.
3. Remove the case extension housing attachment bolts and the case extension housing.

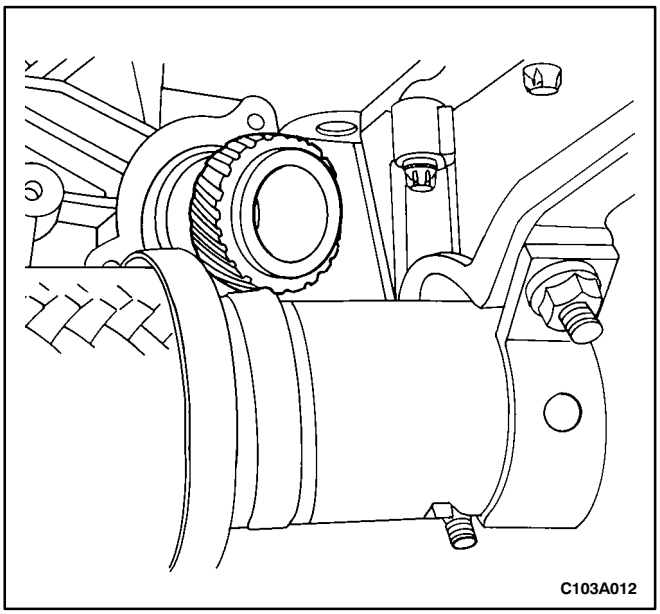

4. Remove speed sensor rotor.

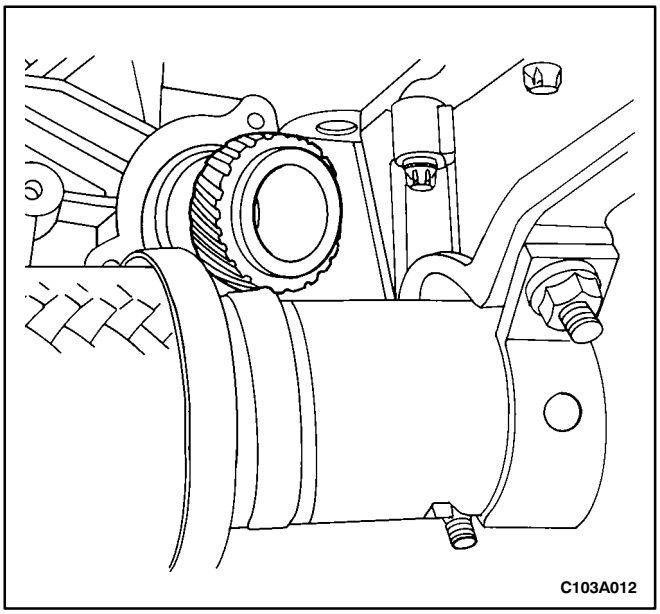

Installation Procedure

1. Install the speed sensor rotor.

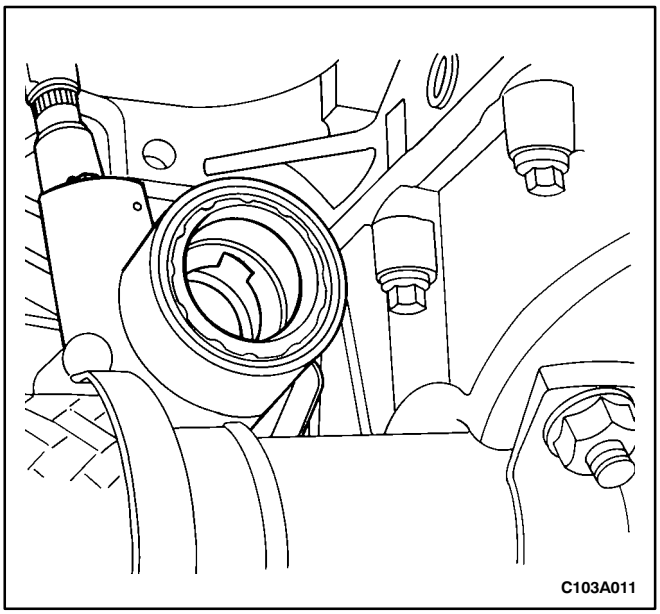

2. Install the case extension housing with the attachment bolts.

   Tighten

   Tighten the case extension housing attachment bolts to 43 N•m (32 lb-ft).
3. Attach the vehicle speed sensor connection. Refer to “Speed Sensor” in this section.
4. Connect the negative battery cable.

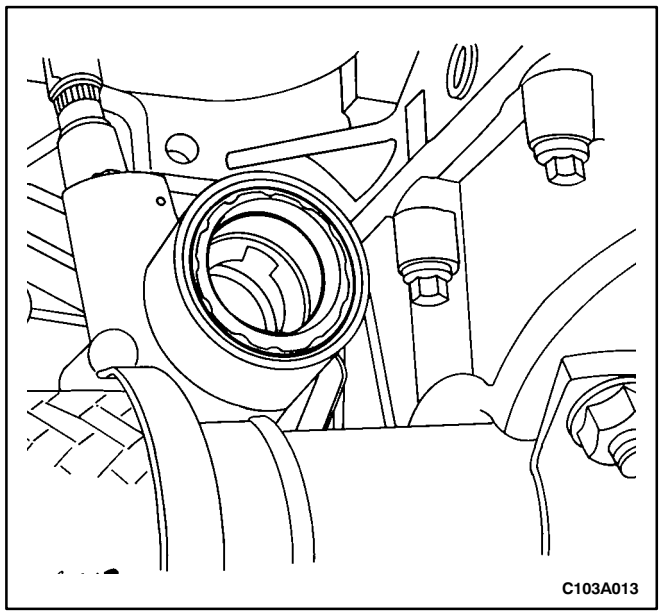

DRIVE AXLE FLUID SEALS

Removal Procedure

1. Raise and suitably support the vehicle.
2. Remove the wheels. Refer to *Section 2E, Tires and Wheels*.
3. Disconnect the automatic transaxle drive axles from the automatic transaxle. Refer to *Section 3A, Automatic Transaxle Drive Axle*.
4. Remove the right side drive axle fluid seal.

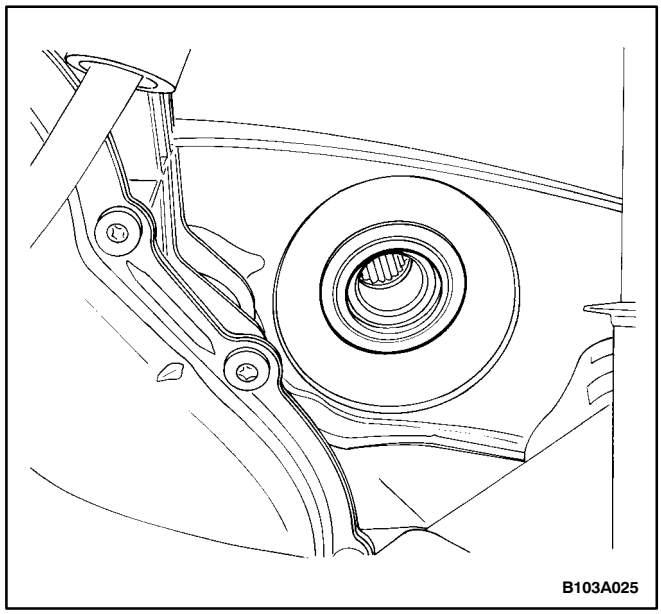

5. Remove the left side drive axle fluid seal.

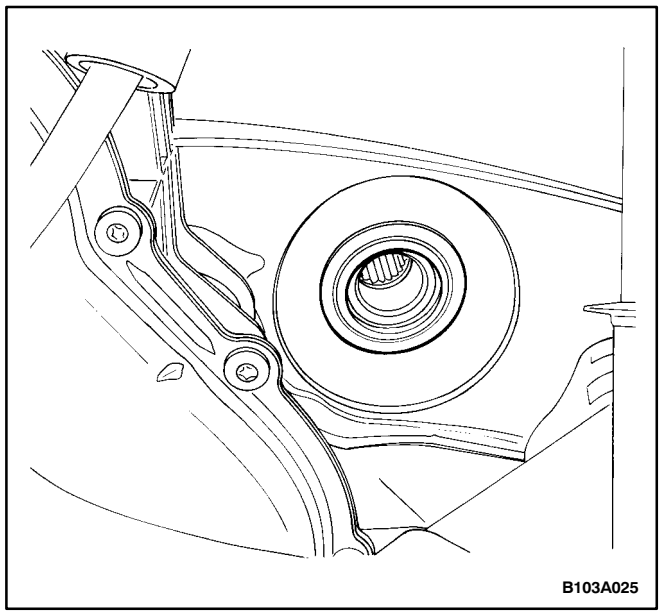

Installation Procedure

1. Install the left side drive axle fluid seal.

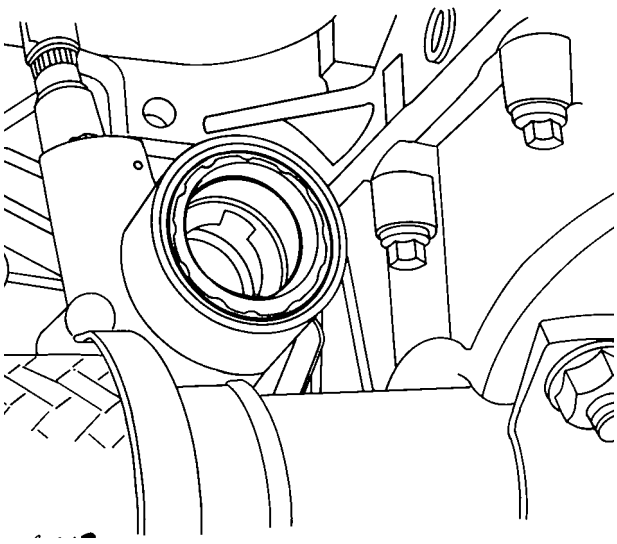

2. Install the right side drive axle fluid seal.
3. Connect the automatic transaxle drive axles to the automatic transaxle. Refer to *Section 3A, Automatic Transaxle Drive Axle.*
4. Install the wheels. Refer to *Section 2E, Tires and Wheels*.
5. Lower the vehicle.

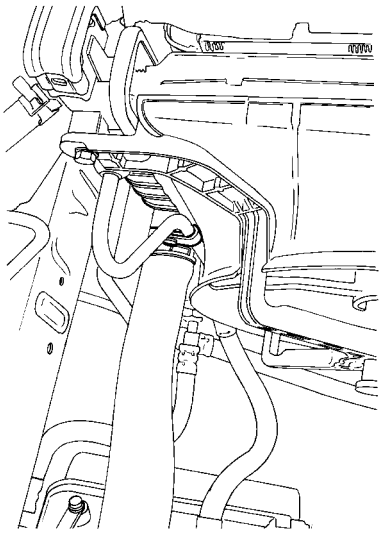

FLUID COOLER PIPES AND HOSES

Removal Procedure

1. Remove the battery and the battery tray.
2. Place a pan under the vehicle to catch any leaking fluid.
3. Remove the securing fastener from the cooler pipe on the radiator.

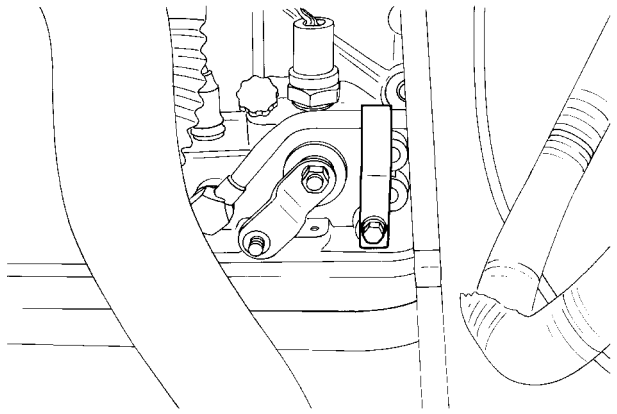

4. Remove the securing fastener from the cooler pipe on the transaxle case.

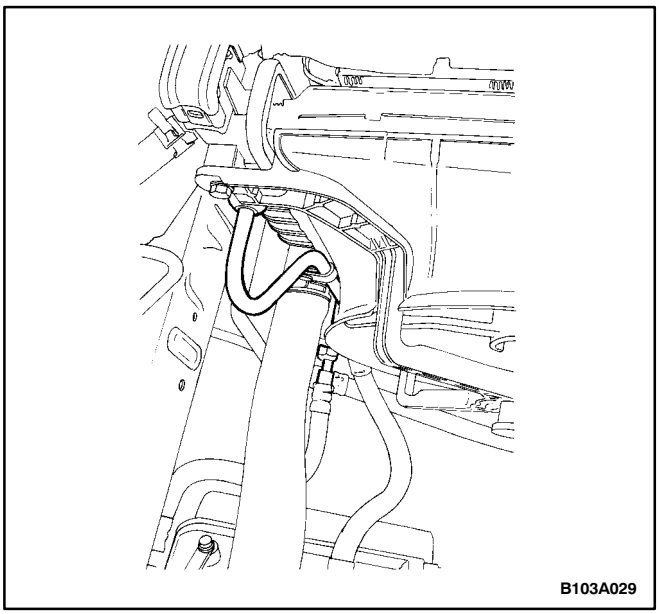

5. Loosen the cooler pipe connections on the radiator.

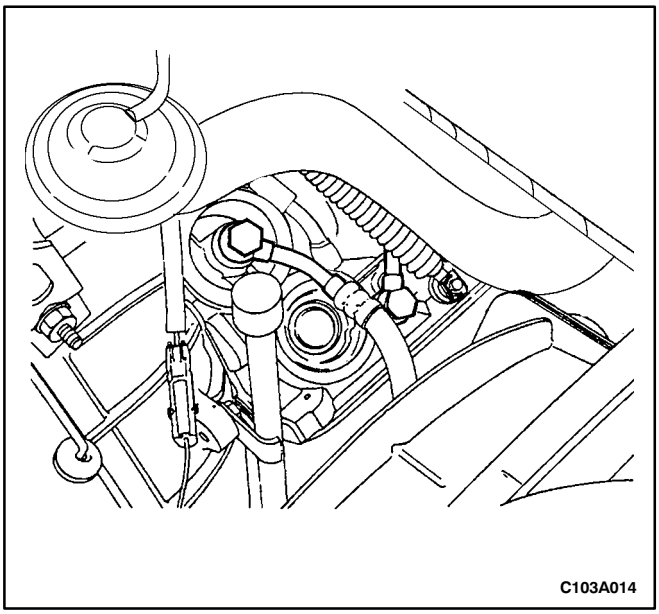

6. Loosen the cooler pipe connections on the transaxle case.
7. Remove the cooler hoses and the cooler pipes.

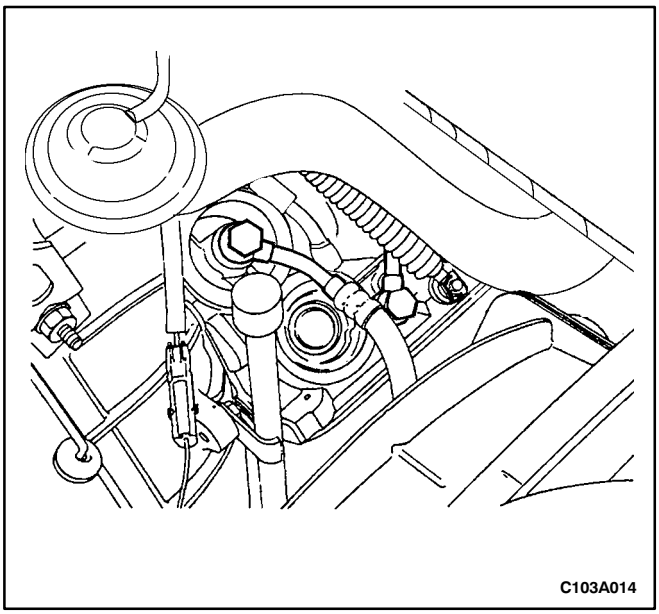

Installation Procedure

1. Install the cooler hoses and the cooler pipes.
2. Secure the cooler pipe connections onto the transaxle case with the bolts.

Tighten

Tighten the cooler pipe-to-transaxle case bolts to 22 N•m (16 lb-ft).

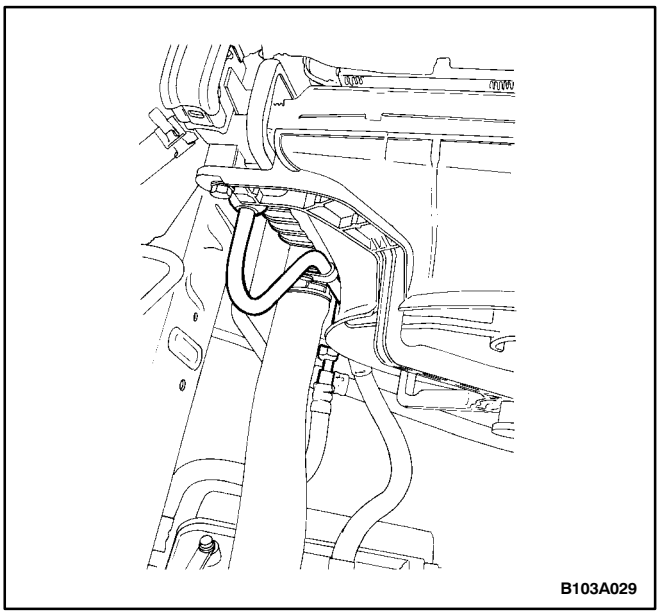

3. Secure the pipe connections onto the radiator with the nuts.

Tighten

Tighten the cooler pipe-to-radiator nuts to 22 N•m (16 lb-ft).

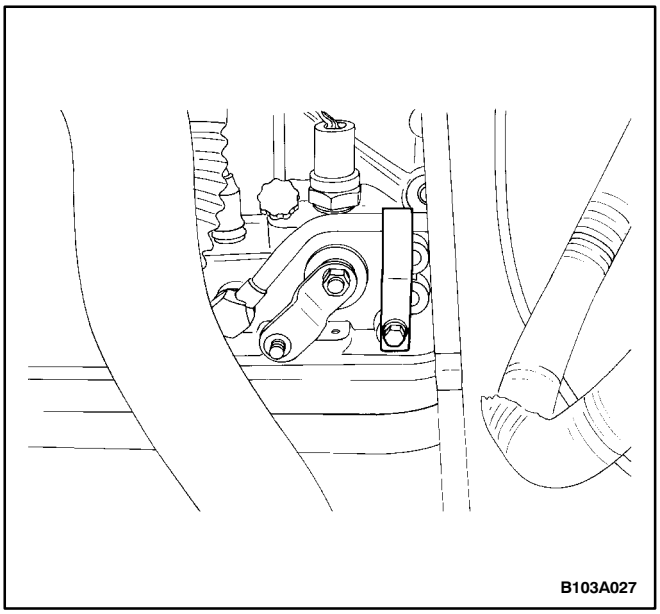

4. Install the cooler pipe securing fastener onto the transaxle case with the fastener bolt.

Tighten

Tighten the cooler pipe-to-transaxle case fastener bolt to 25 N•m (18 lb-ft).

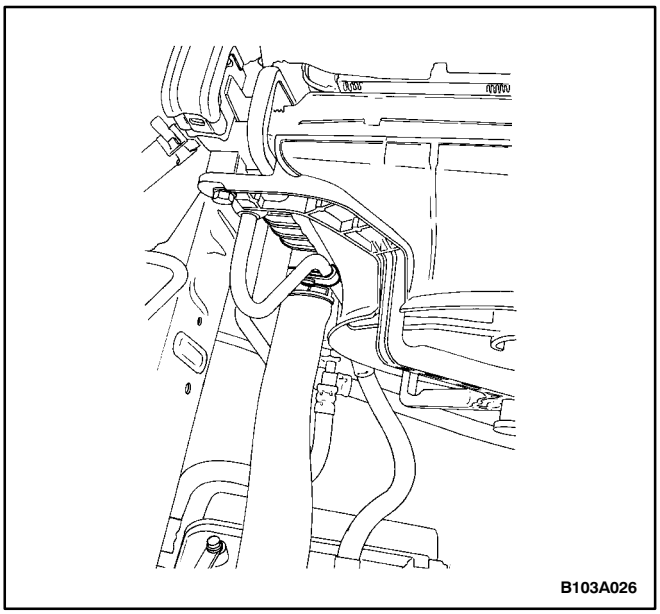

5. Install the cooler pipe securing fastener onto the radiator with the fastener bolt.

Tighten

Tighten the cooler pipe-to-radiator fastener bolt to 25 N•m (18 lb-ft).

6. Check the transaxle fluid level. Replace the fluid as needed. Refer to “Fluid Level Set After Service” in this section.
7. Install the battery tray and the battery.

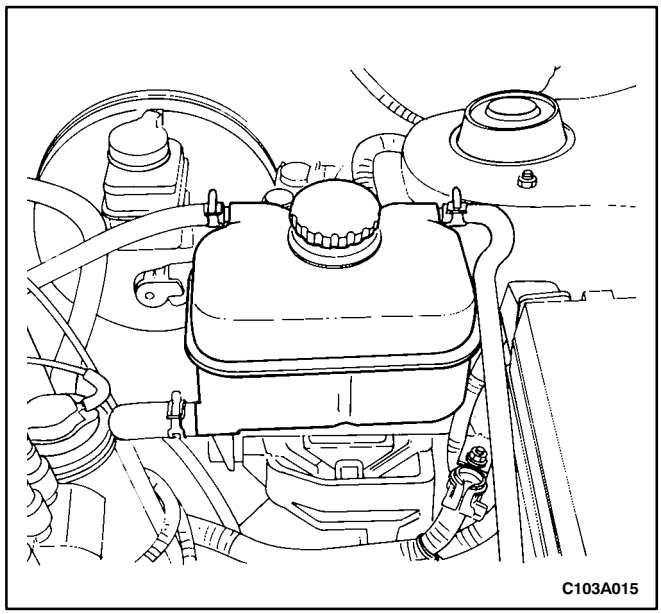

TRANSAXLE LEFT MOUNT

(Left–Hand Drive Shown, Right–Hand Drive Similar)

Tools Required

J-28467-B Engine Support Fixture

Removal Procedure

1. Disconnect the battery. Remove the battery and the battery tray.
2. Remove the coolant surge tank.

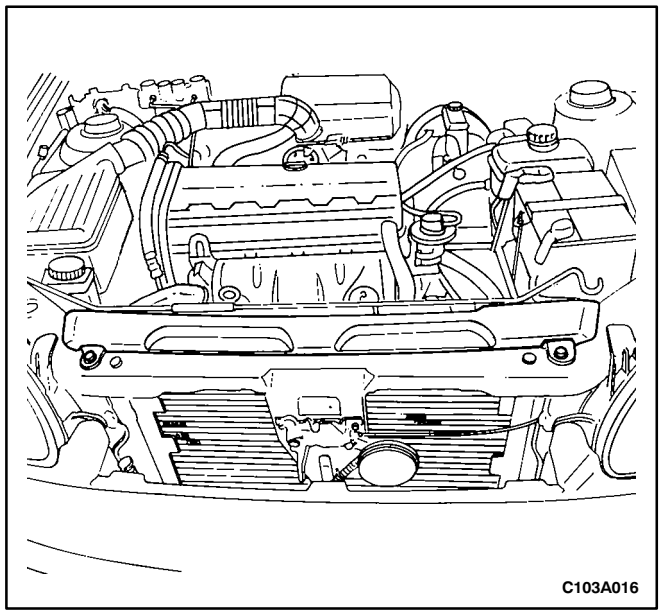

3. Remove the upper radiator cover.

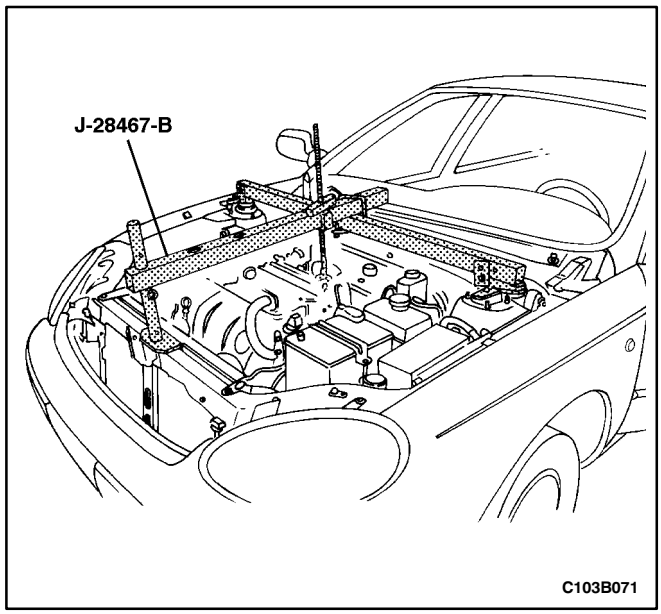

4. Attach the engine support fixture J-28467-B to the right side of the engine. Refer to “Engine Support Fixture” in this section.
5. Support the engine with the engine support fixture J-28467-B.

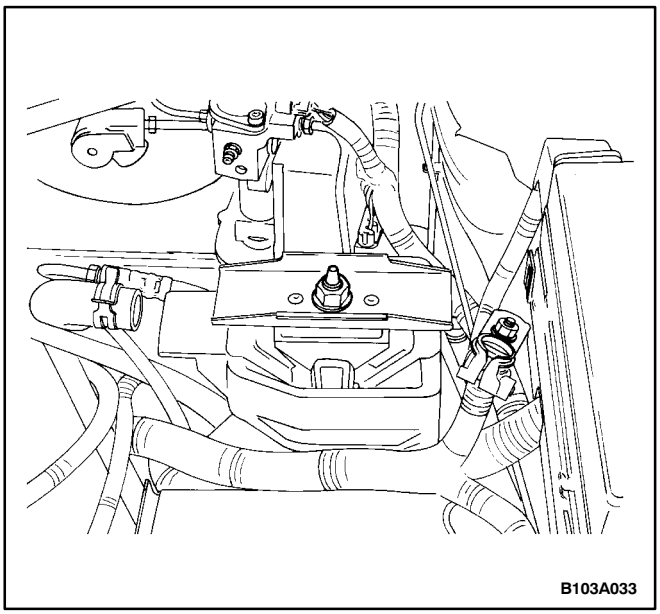

6. Remove the bolt that connects the transaxle left mount to the left transaxle bracket.

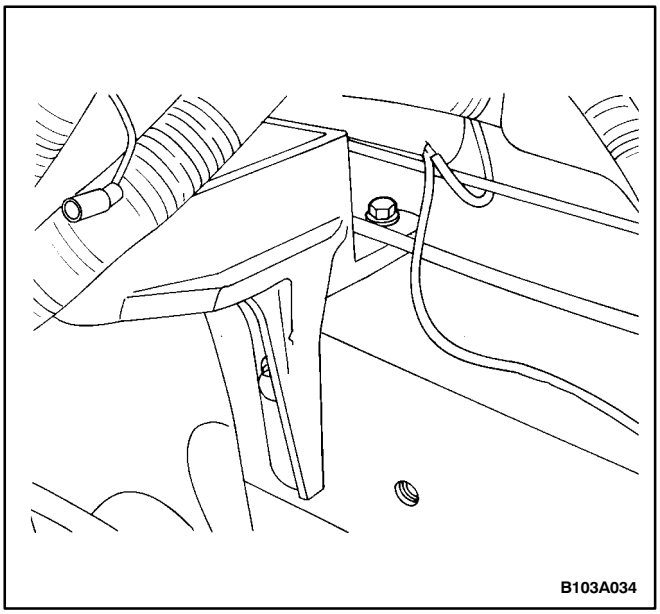

7. Remove the bolts that connect the transaxle left mount to the vehicle. Two bolts are on each side of the mount.
8. Remove the transaxle left mount.

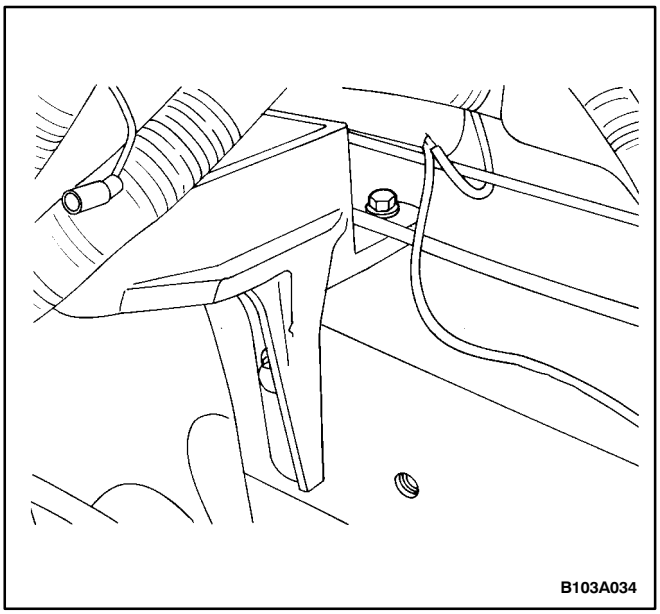

Installation Procedure

1. Install the transaxle left mount.
2. Install the bolts that connect the transaxle left mount to the vehicle.

Tighten

Tighten the transaxle left mount-to-body connecting bolts to 58 N•m (43 lb-ft).

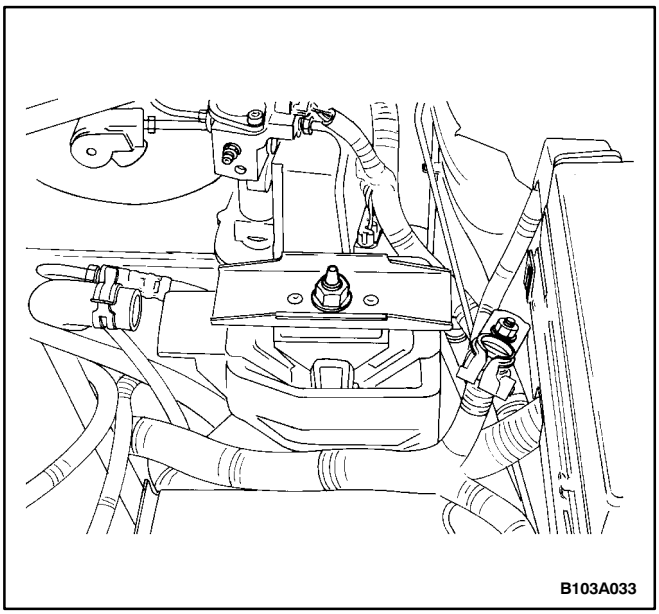

3. Install the bolt that connects the transaxle left mount to the transaxle left bracket.

Tighten

Tighten the transaxle left mount-to-transaxle left bracket connecting bolt to 48 N•m (35 lb-ft).

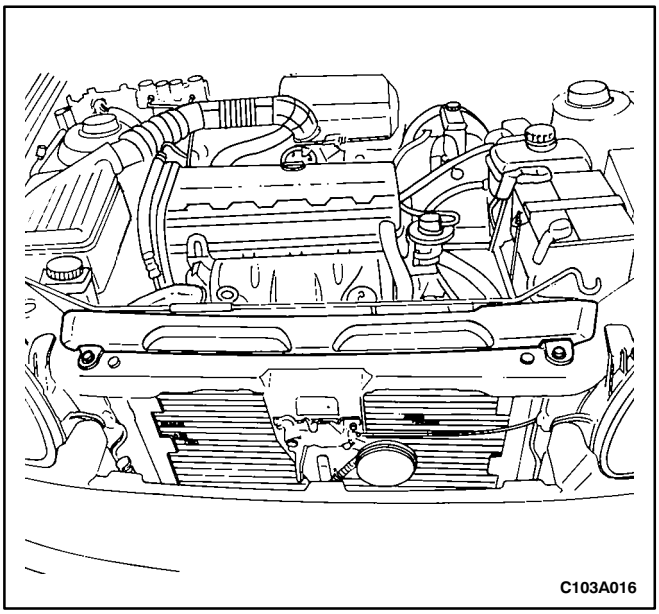

4. Remove the engine support fixture J-28467-B from the engine.
5. Install the upper radiator cover.

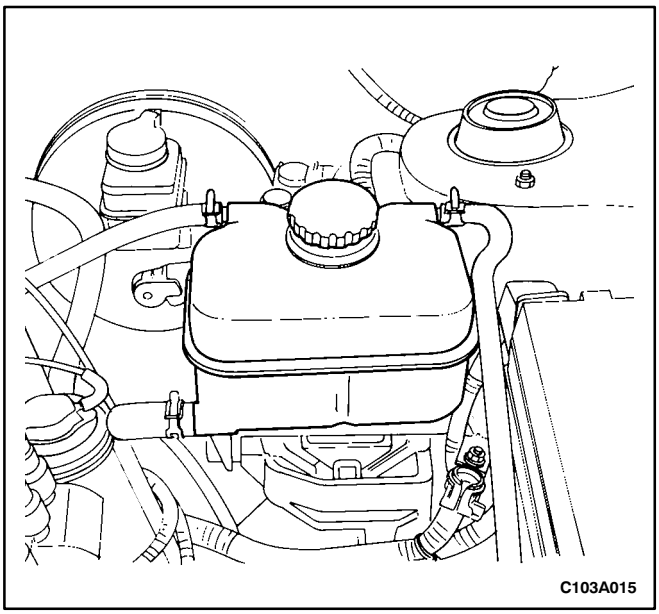

6. Install the coolant surge tank with the bolts.

Tighten

Tighten the coolant surge tank mounting bolts to 25 N•m (18 lb-ft).

7. Install the battery tray and the battery. Connect the battery.

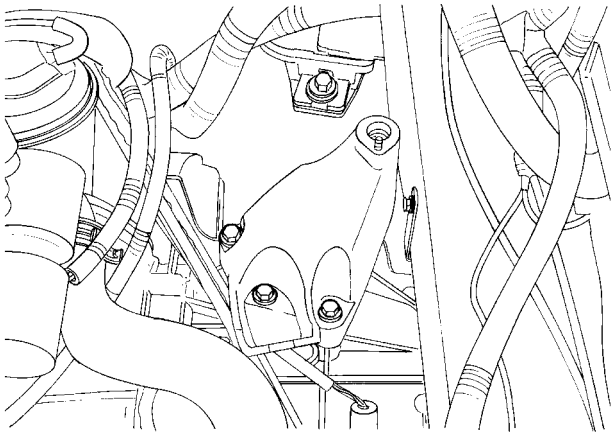

B103A035

TRANSAXLE LEFT BRACKET

Removal Procedure

1. Remove the battery and the battery tray.
2. Remove the transaxle mount. Refer to “Transaxle Mount” in this section.
3. Disconnect the shift control cable from the transaxle left bracket.
4. Disconnect the shift control cable from the selector lever. Refer to “Shift Control Cable” in this section.
5. Remove the bolts that connect the transaxle to the transaxle left bracket.
6. Remove the transaxle left bracket.

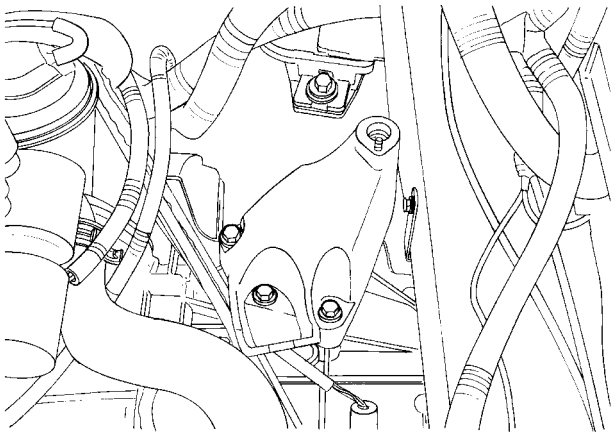

B103A035

Installation Procedure

1. Install the transaxle left bracket.
2. Install the bolts that connect the transaxle left bracket to the transaxle.

   ### Tighten

   Tighten the transaxle left bracket connecting bolts to 48 N•m (35 lb-ft).
3. Install the transaxle mount. Refer to “Transaxle Mount” in this section.
4. Connect the shift control cable to the selector lever.
5. Connect the shift control cable. Refer to “Shift Control Cable” in this section.
6. Adjust the shift control cable. Refer to “Control Cable Adjustment” in this section.
7. Install the battery tray and the battery.

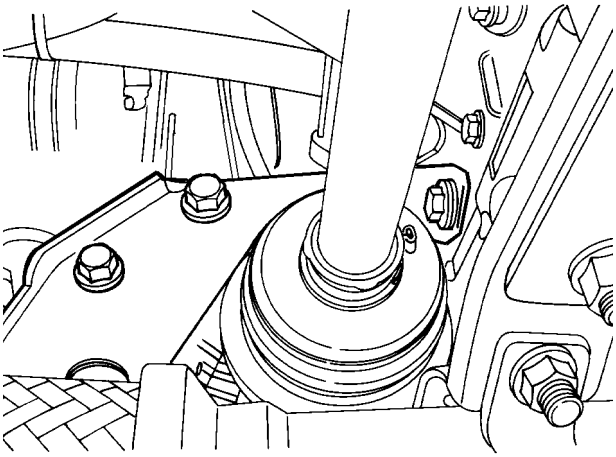

C103A022

TRANSAXLE CENTER BRACKET

Removal Procedure

1. Remove the center member from the vehicle. Refer to *Section 9N, Frame and Underbody.*
2. Remove the bolts that connect the transaxle center bracket to the transaxle.
3. Remove the bolt that connects the transaxle center bracket to the engine.
4. Remove the transaxle center bracket.

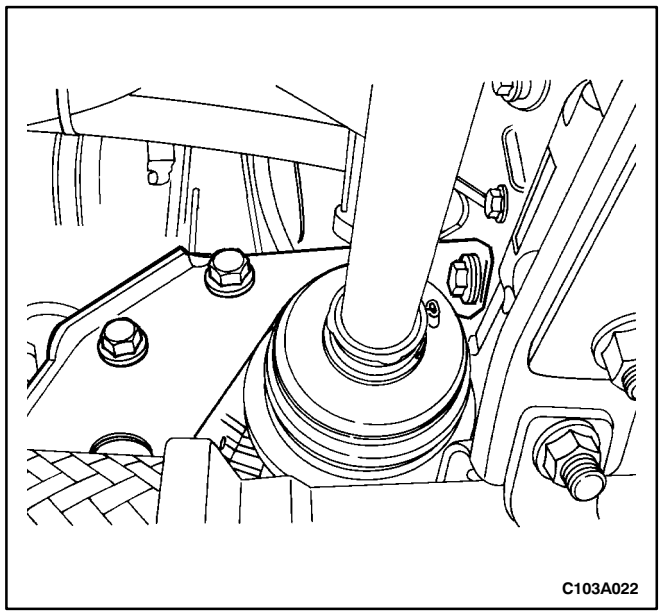

Installation Procedure

1. Install the transaxle center bracket to the transaxle with the bolts.

   Tighten

   Tighten the transaxle center bracket-to-transaxle bolts to 90 N•m (66 lb-ft).

2. Install the transaxle center bracket to the engine with the bolt.

   Tighten

   Tighten the transaxle center bracket-to-engine bolt to 90 N•m (66 lb-ft).

3. Install the center member into the vehicle. Refer to *Section 9N, Frame and Underbody.*

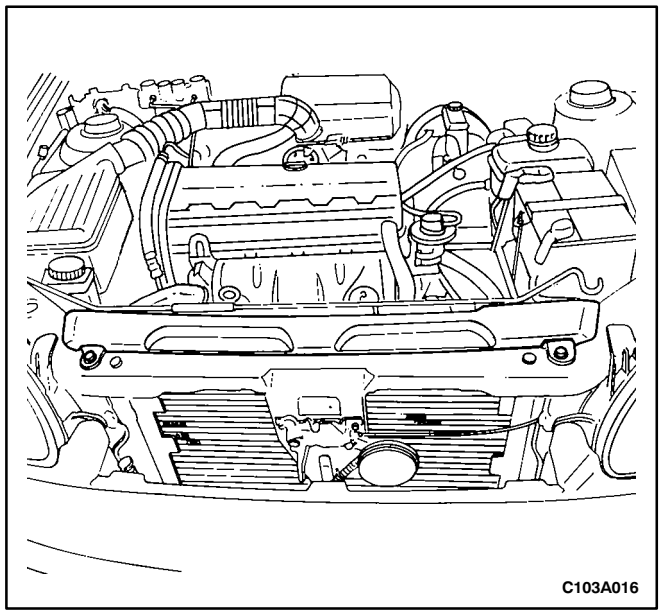

TRANSAXLE ASSEMBLY

(Left–Hand Drive Shown, Right–Hand Drive Similar)

Tools Required

J-28467-B Engine Support Fixture

Removal Procedure

1. Remove the battery and the battery tray.
2. Disconnect the shift control cable from the transaxle bracket.
3. Disconnect the shift control cable from the selector lever. Refer to “Shift Control Cable” in this section.
4. Disconnect the neutral start switch from the wiring harness. Refer to “Neutral Start Switch” in this section.
5. Disconnect the throttle valve cable from the throttle cable wheel. Refer to “Throttle Valve Cable” in this section.
6. Remove the upper radiator cover.

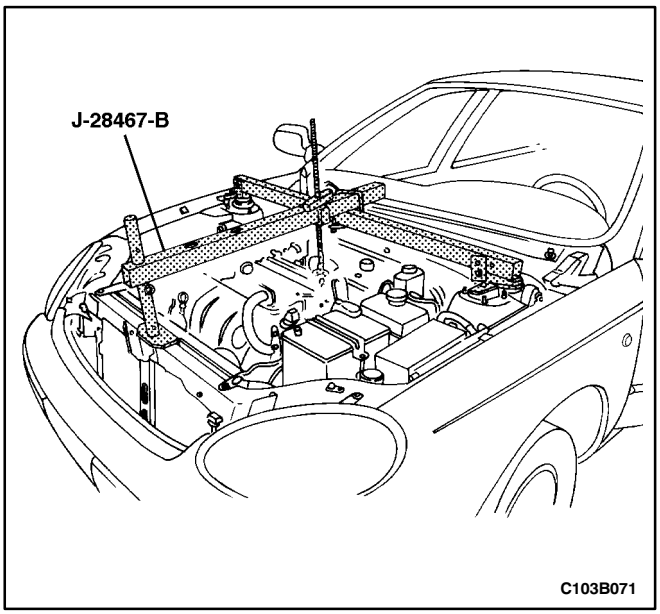

7. Attach the engine support fixture J-28467-B to the right side of the engine. Refer to “Engine Support Fixture” in this section.
8. Support the engine with the engine support fixture J-28467-B.
9. Disconnect the transaxle from the transaxle bracket. Refer to “Transaxle Bracket” in this section.
10. Raise and suitably support the vehicle.
11. Remove the engine under covers. Refer to *Section 9N, Frame and Underbody*.
12. Drain the transaxle fluid. Refer to “Changing Fluid” in this section.
13. Disconnect the vehicle speed sensor electrical connector. Refer to “Speed Sensor” in this section.
14. Lower the vehicle.
15. Remove the fluid cooler hoses and the cooler pipes from the transaxle case. Refer to “Fluid Cooler Pipes” in this section.
16. Remove the bolts that connect the transaxle to the transaxle bracket. Refer to “Transaxle Bracket” in this section.
17. Raise the vehicle.
18. Remove the wheels. Refer to *Section 2E, Tires and Wheels*.
19. Disconnect the automatic transaxle drive axles from the automatic transaxle. Refer to *Section 3A, Automatic Transaxle Drive Axle*.
20. Remove the forward engine mount. Refer to *Section 1B, SOHC Engine Mechanical* or *Section 1C, DOHC Engine Mechanical*.

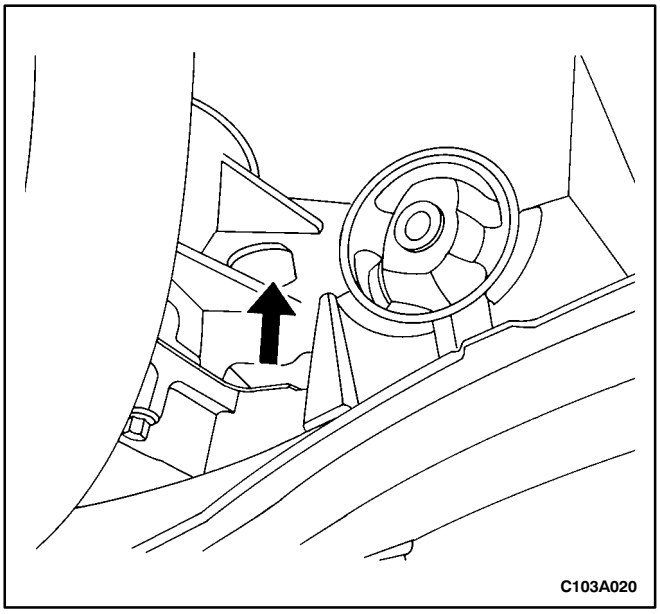

21. Rotate the flex plate through the hole at the bottom of the transaxle to gain access to all the torque converter bolts through the hole at the side of the engine.
22. Remove the torque converter bolts from the flex plate.

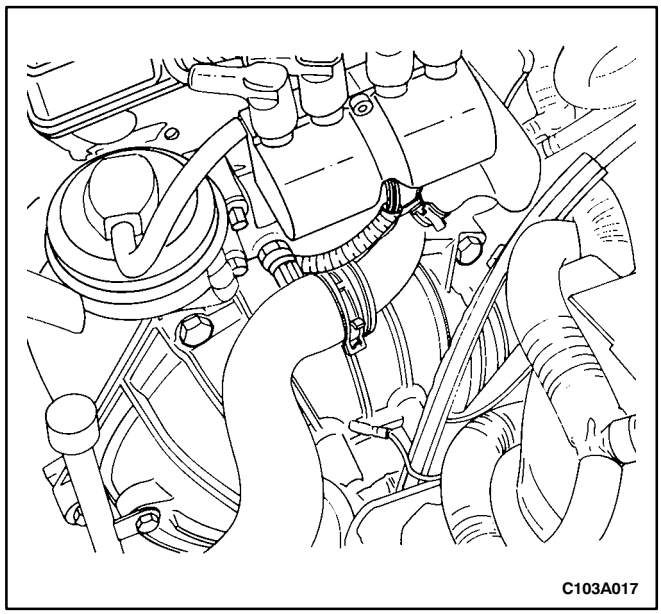

23. Lower the vehicle.
24. Remove the bell housing upper bolts.

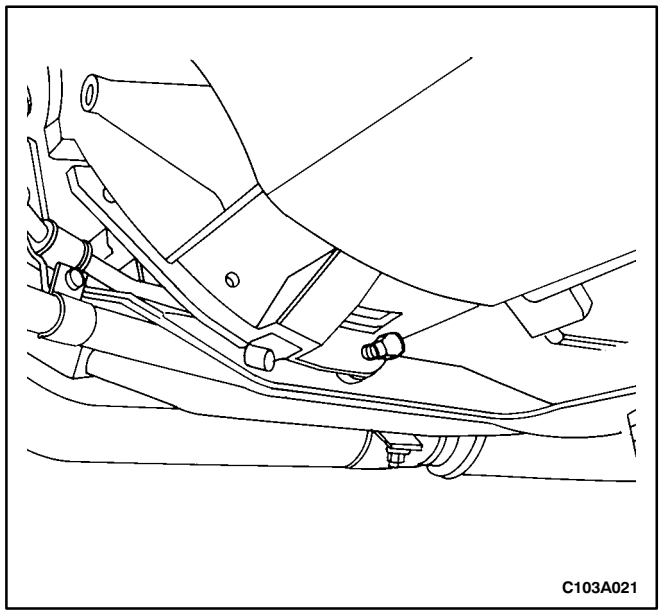

25. Raise the vehicle.
26. Support the transaxle from below with a transaxle jack.
27. Remove the bell housing lower bolts.
28. Remove the bolts that connect the transaxle center bracket to the transaxle. Refer to “Transaxle Center Bracket” in this section.
29. Lower the transaxle and remove it from the vehicle.

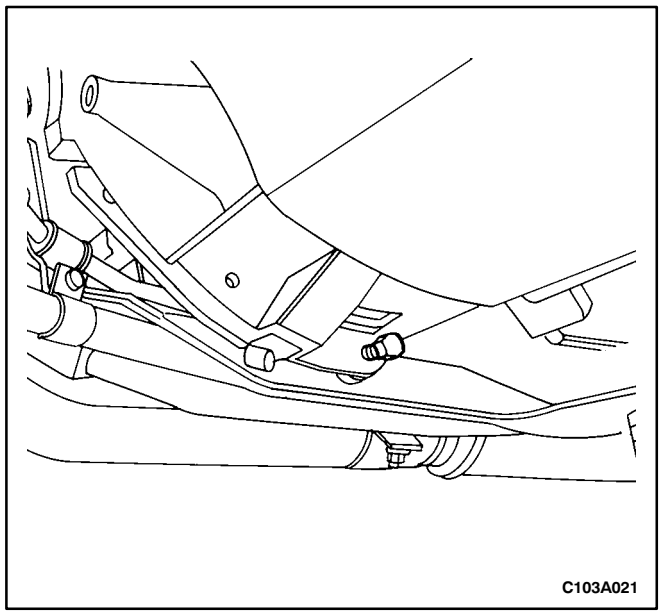

Installation Procedure

1. Install the transaxle into the vehicle with the transaxle jack.
2. Install the bell housing lower bolts.

Tighten

Tighten the bell housing-to-engine lower bolts to 75 N•m (55 lb-ft).

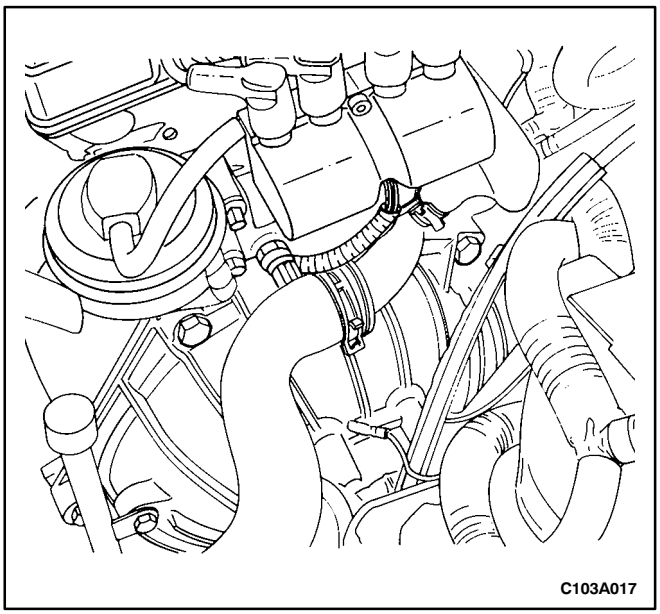

3. Remove the transaxle jack and lower the vehicle.
4. Install the bell housing upper bolts.

Tighten

Tighten the bell housing-to-engine upper bolts to 75 N•m (55 lb-ft).

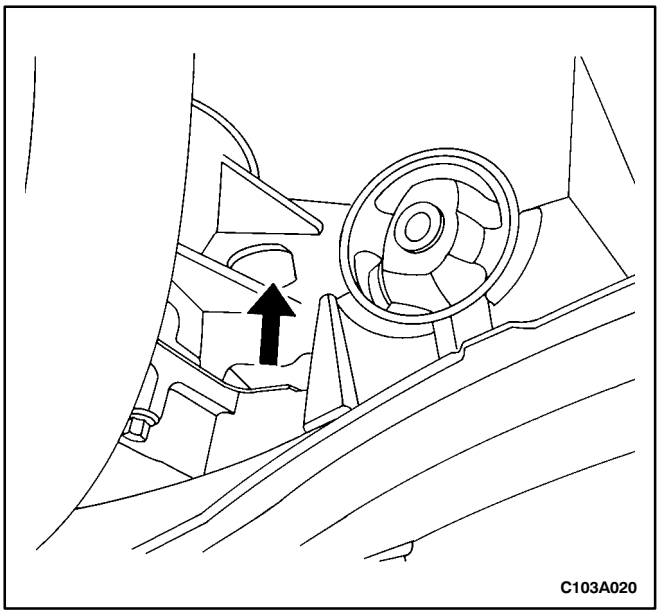

5. Raise the vehicle.
6. Install the torque converter bolts that connect the flywheel and the torque converter. Rotate the flywheel to install all the torque converter bolts.

Tighten

Tighten the torque converter-to-flywheel bolts to 60 N•m (44 lb-ft).

7. Install the forward engine mount. Refer to *Section 1B, SOHC Engine Mechanical* or *Section 1C, DOHC Engine Mechanical*.
8. Install the bolts that connect the transaxle to the transaxle center bracket. Refer to “Transaxle Center Bracket” in this section.

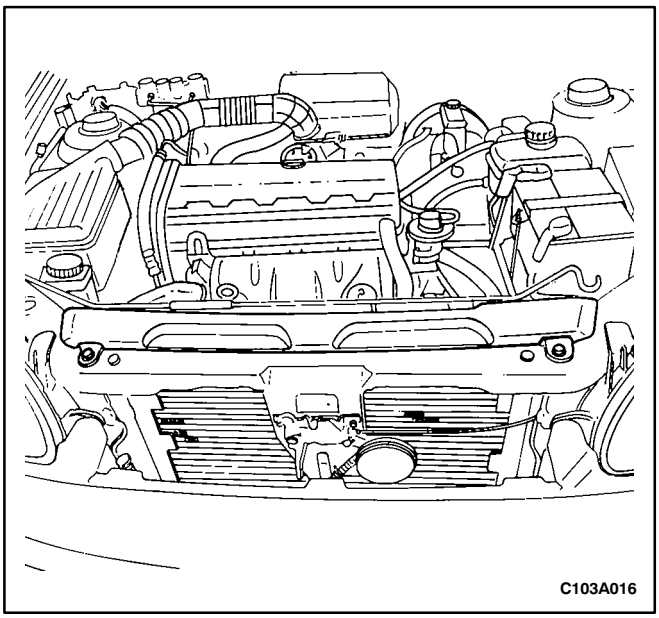

9. Connect the speed sensor electrical connector. Refer to “Speed Sensor” in this section.
10. Connect the automatic transaxle drive axles to the automatic transaxle. Refer to *Section 3A, Automatic Transaxle Drive Axle*.
11. Install the wheels. Refer to *Section 2E, Tires and Wheels*.
12. Lower the vehicle.
13. Install the bolts that connect the transaxle bracket to the transaxle. Refer to “Transaxle Bracket” in this section.
14. Remove the engine support fixture J-28467-B from the engine.
15. Install the fluid cooler hoses and the cooler pipes onto the transaxle case. Refer to “Fluid Cooler Pipes” in this section.
16. Install the upper cable stop to the throttle cable wheel. Refer to “Throttle Valve Cable” in this section.
17. Connect the neutral start switch to the wiring harness. Refer to “Neutral Start Switch” in this section.
18. Connect the shift control cable to the transaxle bracket.
19. Connect the shift control cable to the selector lever. Refer to “Shift Control Cable” in this section.
20. Install the upper radiator cover.
21. Install the battery tray and the battery.

UNIT REPAIR

TRANSAXLE CENTER MOUNT

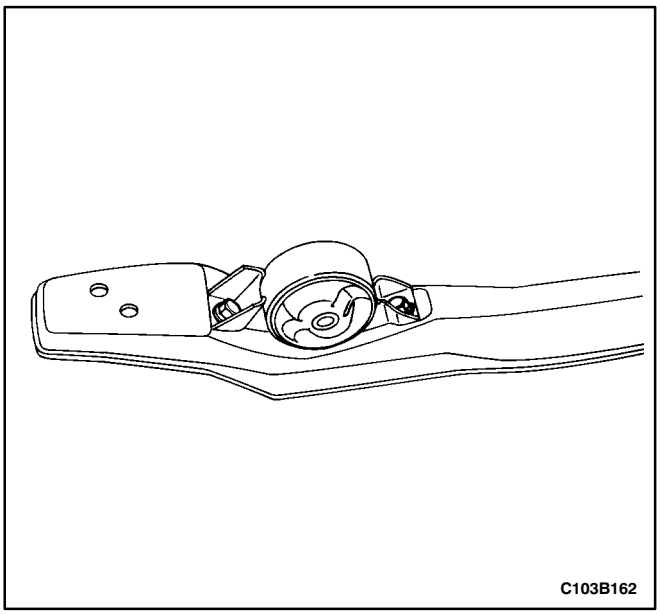

Disassembly Procedure

1. Remove the center member from the vehicle. Refer to *Section 9N, Frame and Underbody*.
2. Remove the transaxle center mount-to-center member bolts.
3. Remove the transaxle center mount.

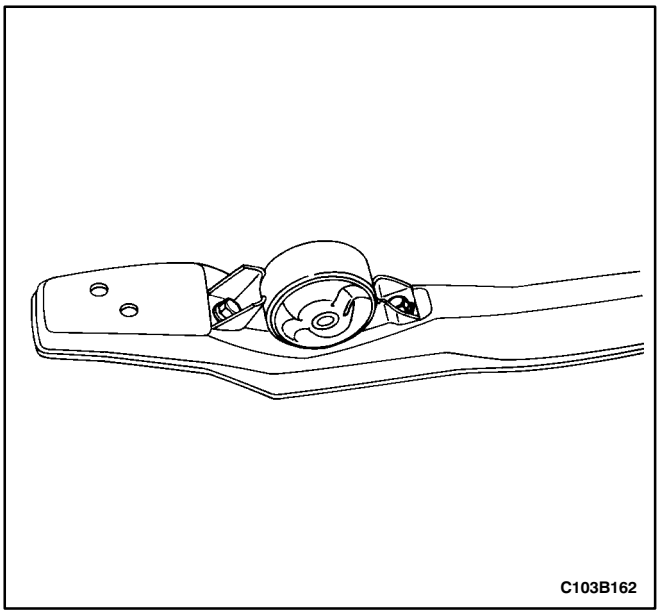

Assembly Procedure

1. Install the transaxle center mount.
2. Install the transaxle center mount-to-center member bolts.

   Tighten

   Tighten the transaxle center mount-to-center member bolts to 65 N•m (48 lb-ft).
3. Install the center member into the vehicle. Refer to *Section 9N, Frame and Underbody*.

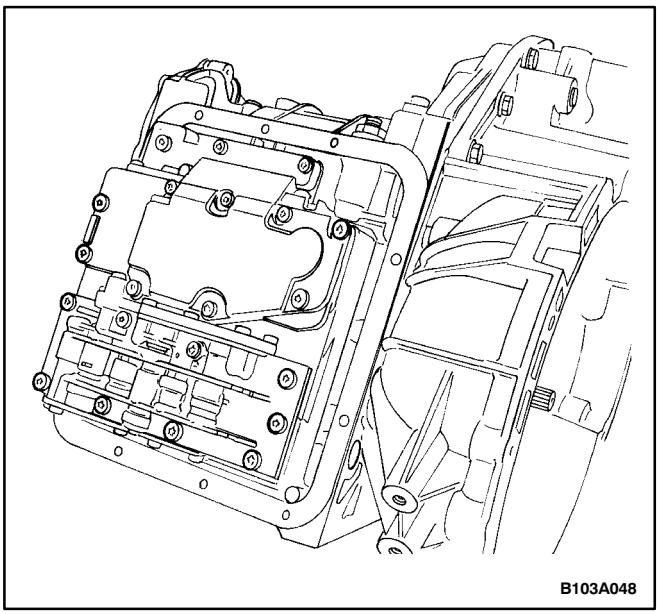

MAJOR COMPONENT DISASSEMBLY

Tools Required

J-26941 Outer Ring Puller Ring Remover

KA-001-023 Bolt Remover

KA-000-155 Grooved Nut Socket

KA-000-288 Side Shaft Retainer

Disassembly Procedure

1. Remove the transaxle from the vehicle. Refer to “Transaxle Assembly” in this section.
2. Remove the torque converter from the transaxle assembly.
3. Secure the transaxle to a bench holding device so the transaxle can rotate through 180 degrees.
4. Start with the fluid pan in the UP position.
5. Remove the fluid pan and the fluid pan gasket. Refer to “Pan and Gasket” in this section.
6. Remove the largest bolts attaching the valve body to the transaxle.

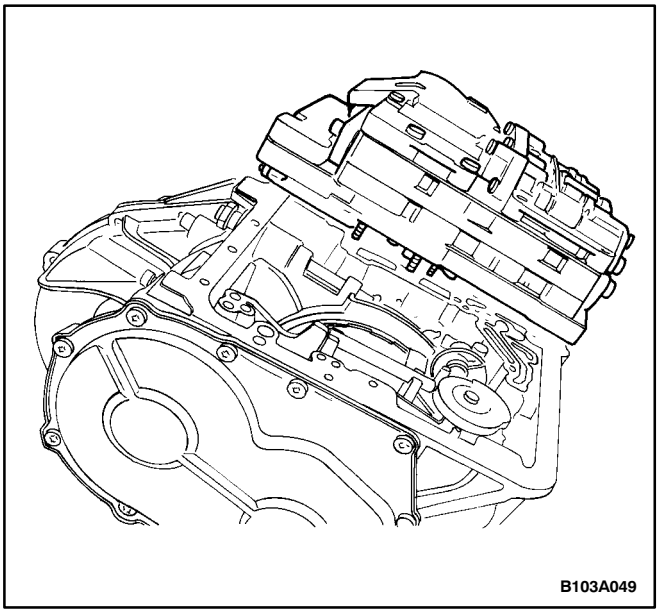

7. Remove the valve body.

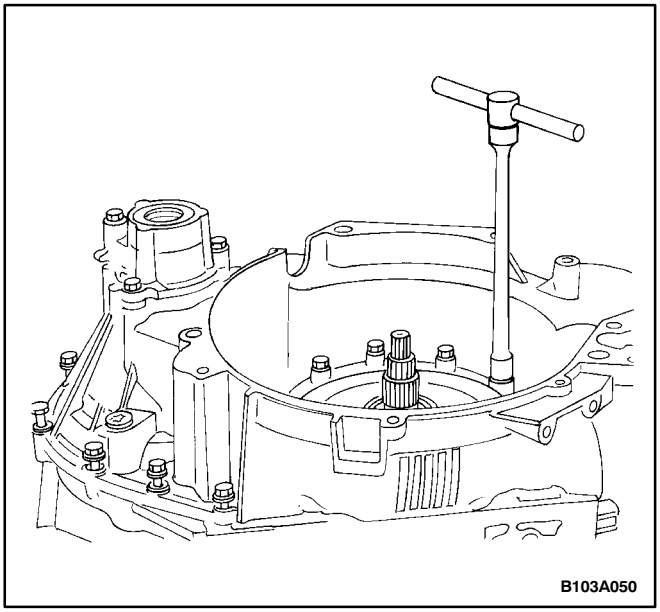

8. Rotate the transaxle 90 degrees so the bell housing is in the UP position.
9. Remove the bolts holding the bell housing to the transaxle case.

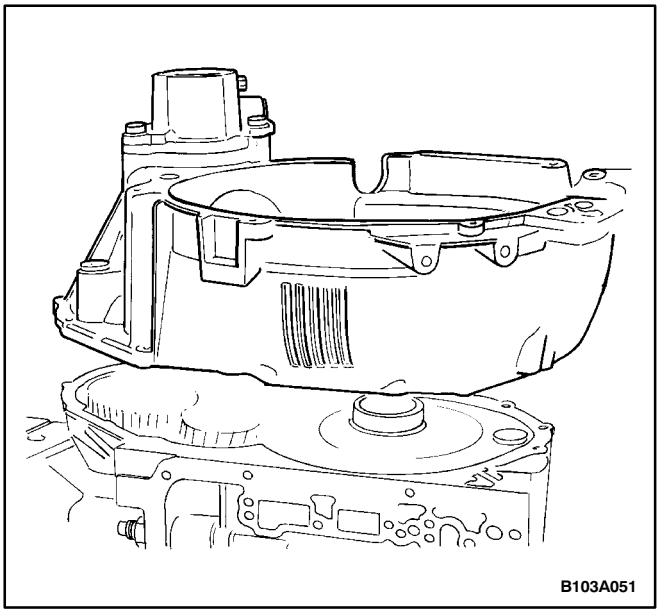

10. Remove the bell housing and the gasket. Remove the speedometer gear from the bell housing.

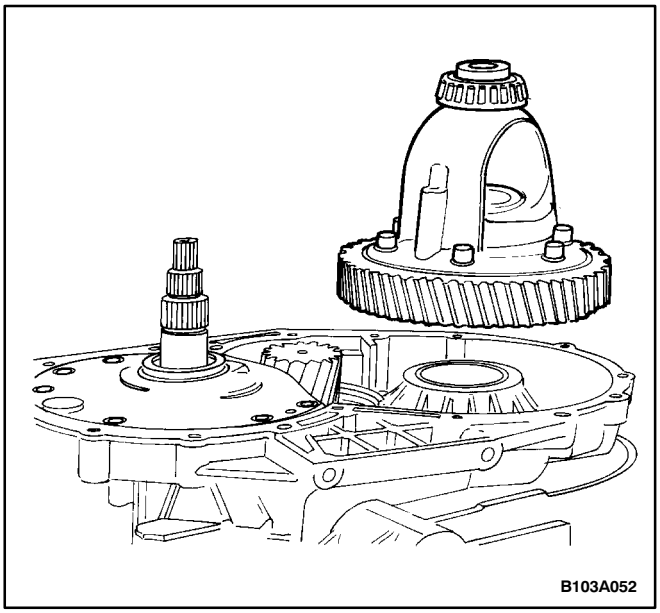

11. Remove the differential gear assembly.

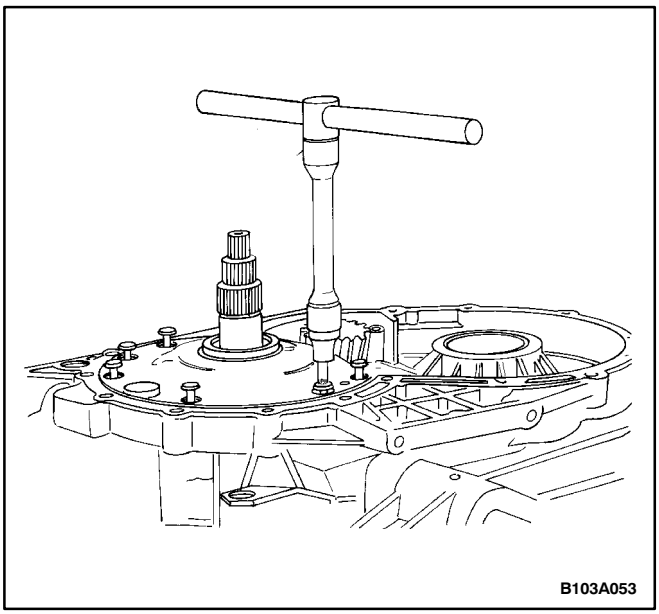

12. Remove the intermediate plate bolts.

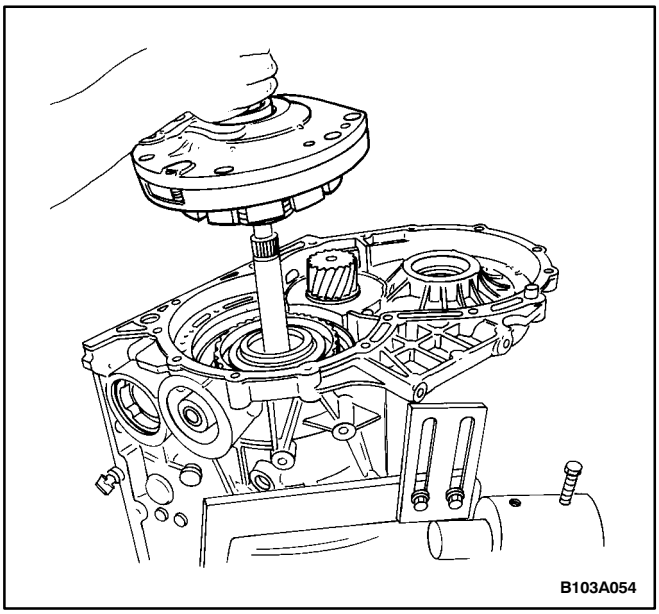

13. Remove the intermediate plate, the pump, and the brake C assembly.

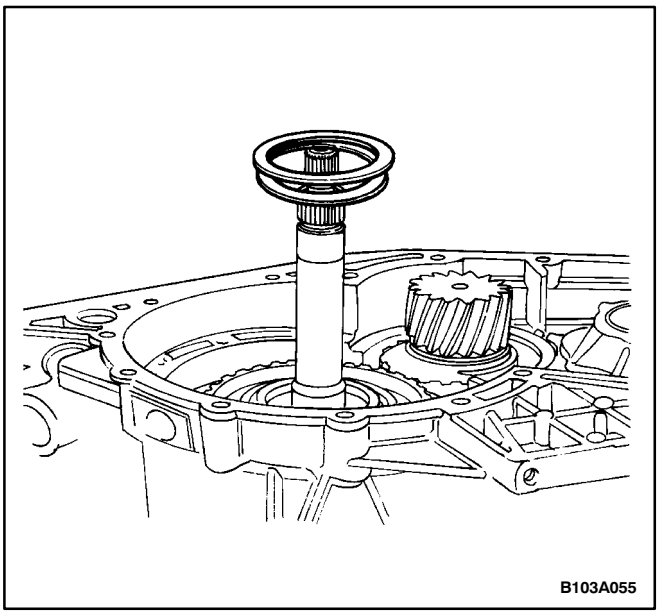

14. Remove the thrust washer and the adjustment washers.

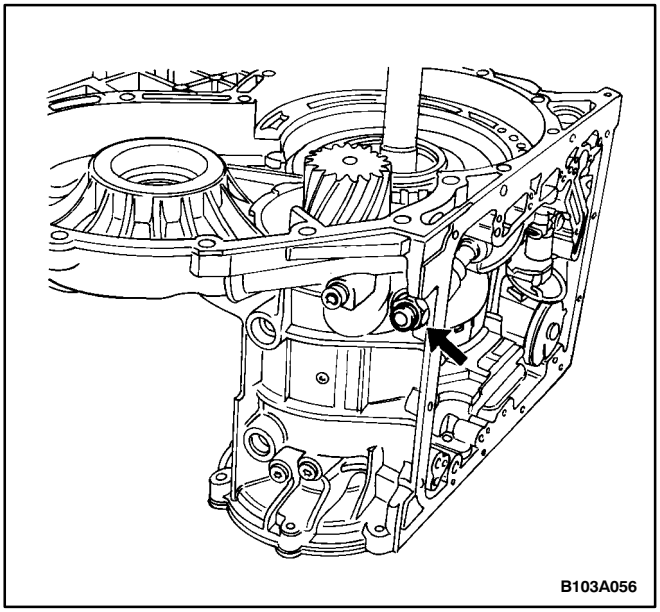

15. Loosen the band C′ by loosening the lock nut and turning the bolt counterclockwise.

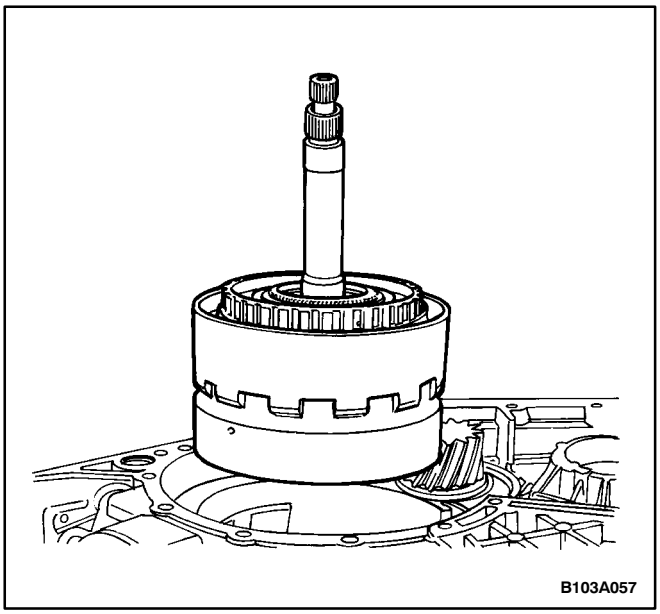

16. Remove the clutch A, the clutch B, and the second freewheel as a unit.

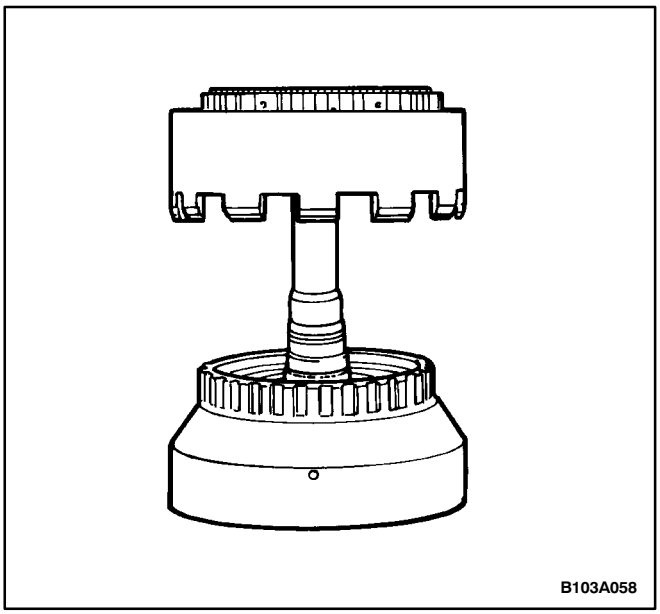

17. Remove the clutch A from the clutch B.

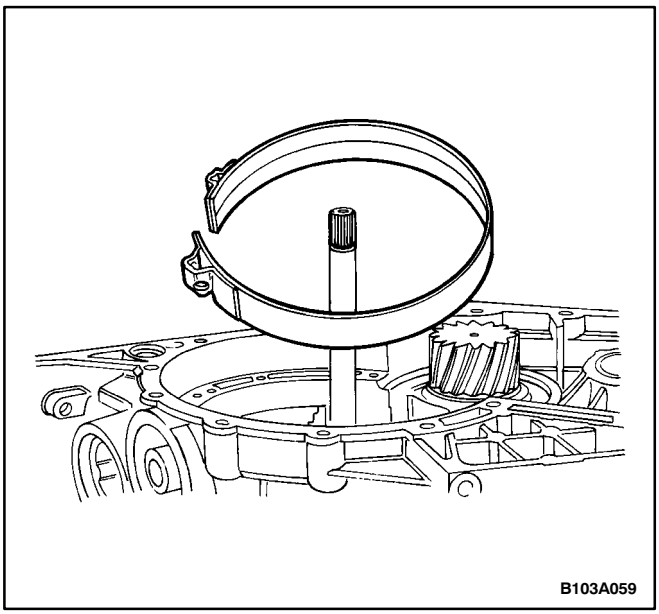

18. Remove the band C′. Do not bend it.

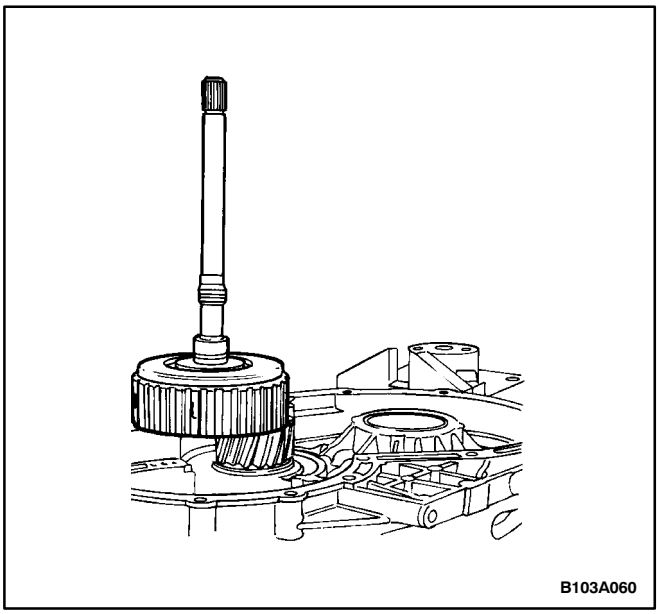

19. Remove the motor shaft together with the clutch E assembly.

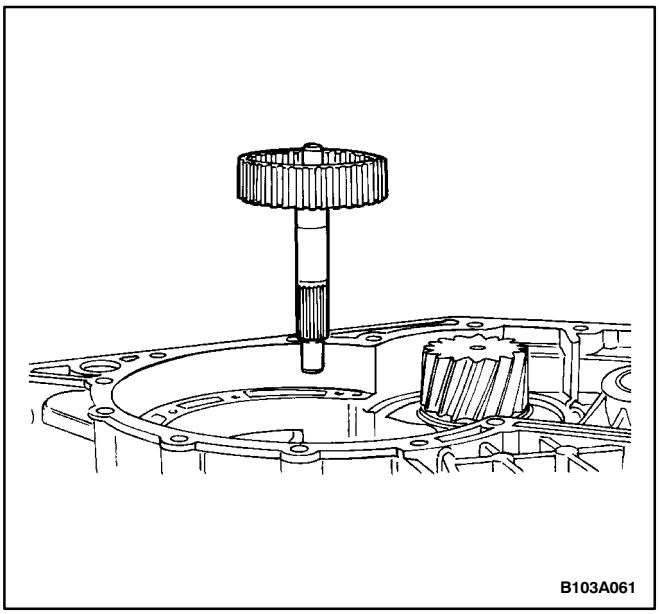

20. Remove the intermediate shaft with the clutch E carrier and the bearing.

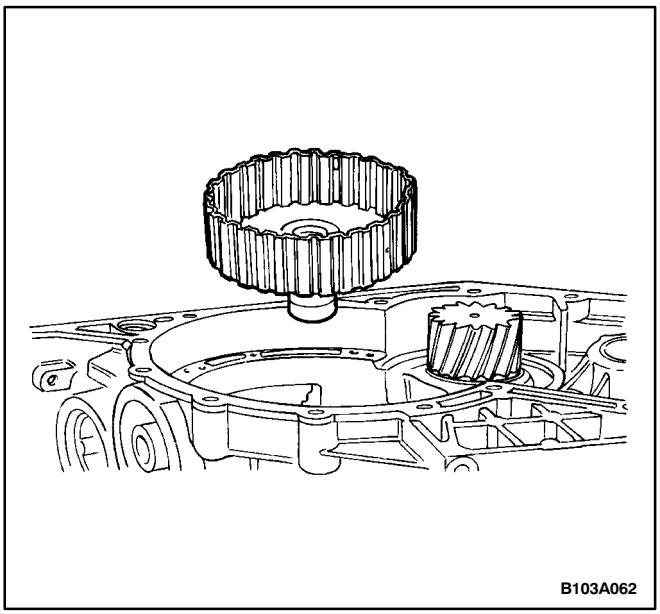

21. Remove the sun shaft with the carrier A, the washer, and the bearing as a complete unit.

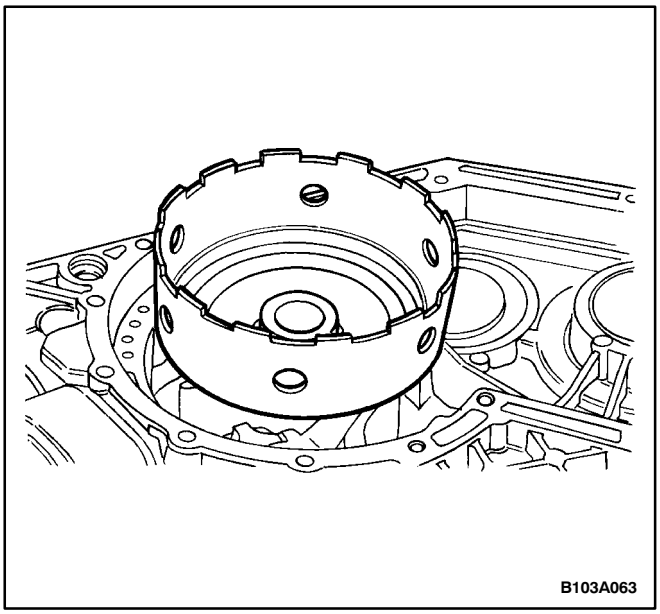

22. Remove the drive shell and the bearing as an assembly.

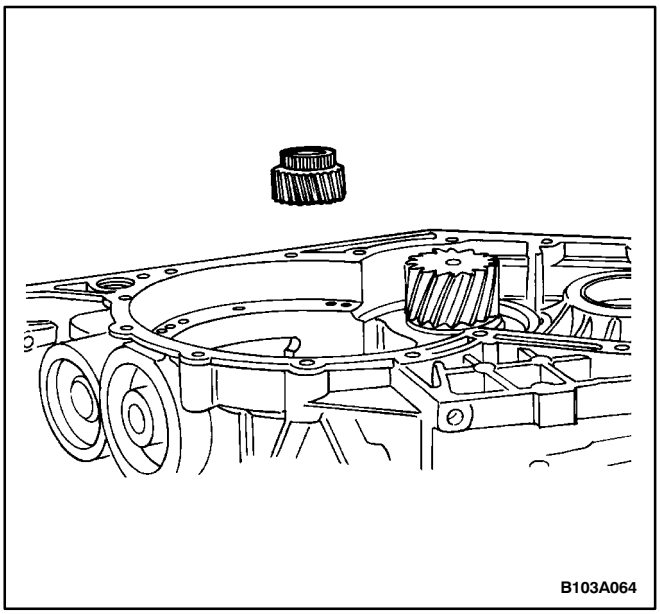

23. Remove the sun gear.

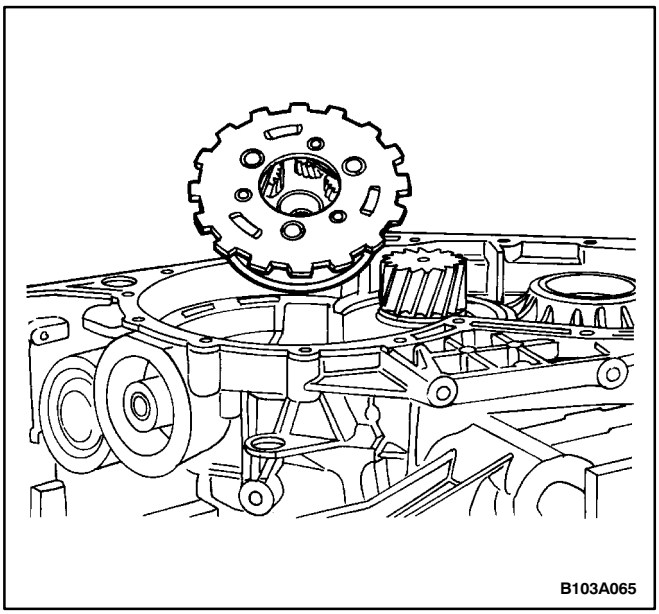

24. Remove the planetary assembly and the needle bearing.

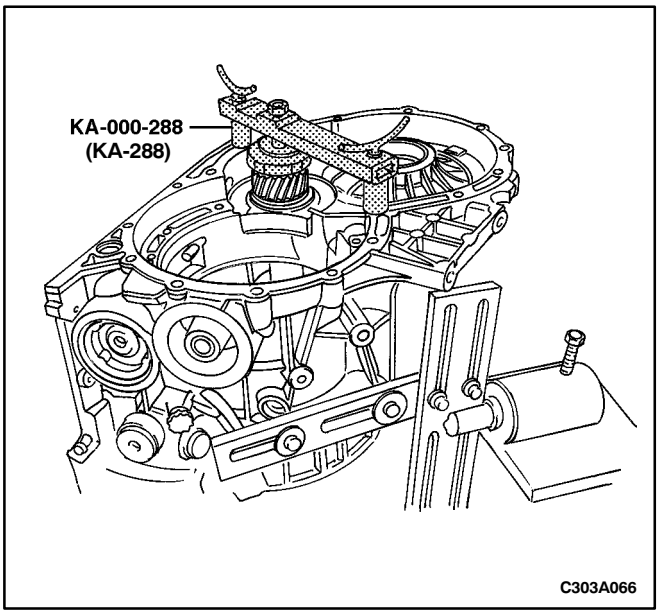

25. Use the side shaft retainer KA-000-288 (KA-288) to hold the side shaft in place.

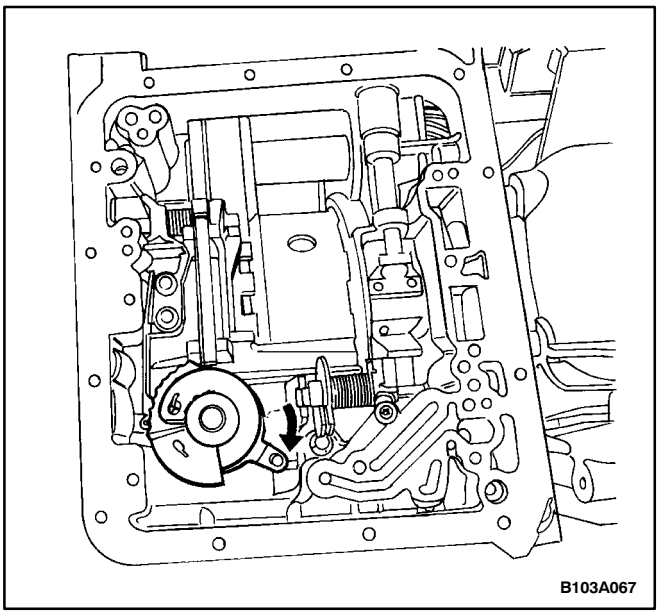

26. Rotate the transaxle 90 degrees so the PARK/LOCK components are in the UP position.
27. Remove the side cover bolts, the side cover, and the gasket. Refer to “Case Side Cover Pan and Gasket” in this section.
28. Make sure the gear selector is in the PARK position.

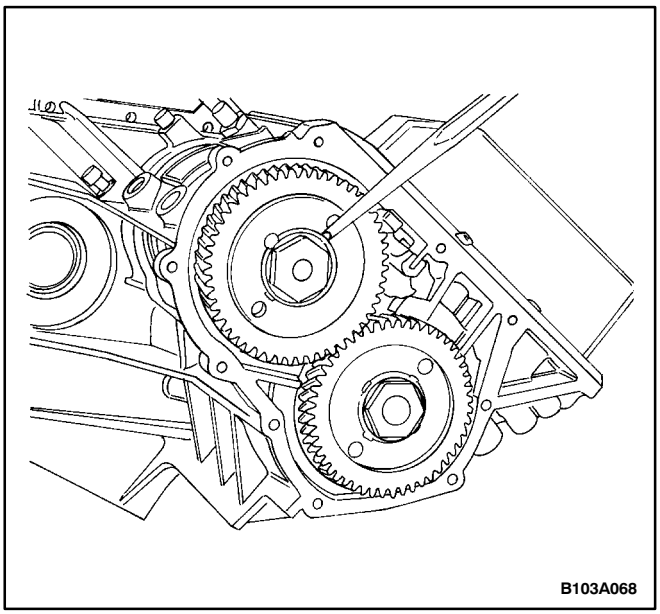

29. Bend the locking tabs on the spur gear securing bolts.

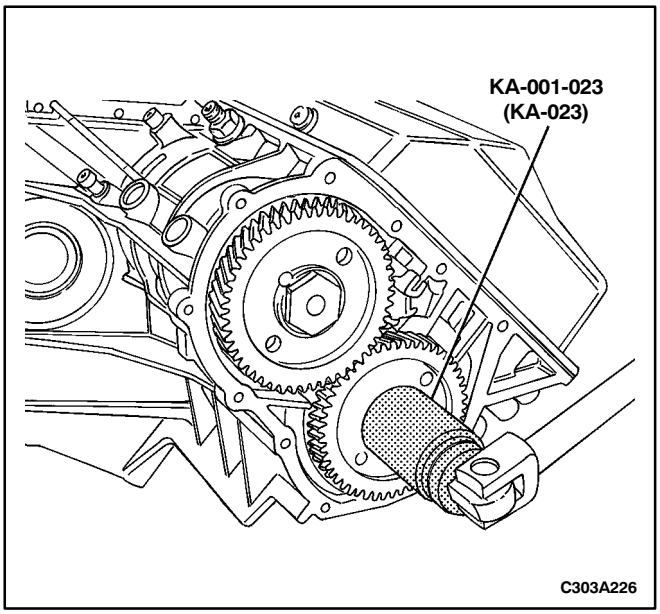

30. Loosen the small spur gear bolt with the bolt remover KA-001-023 (KA-023).

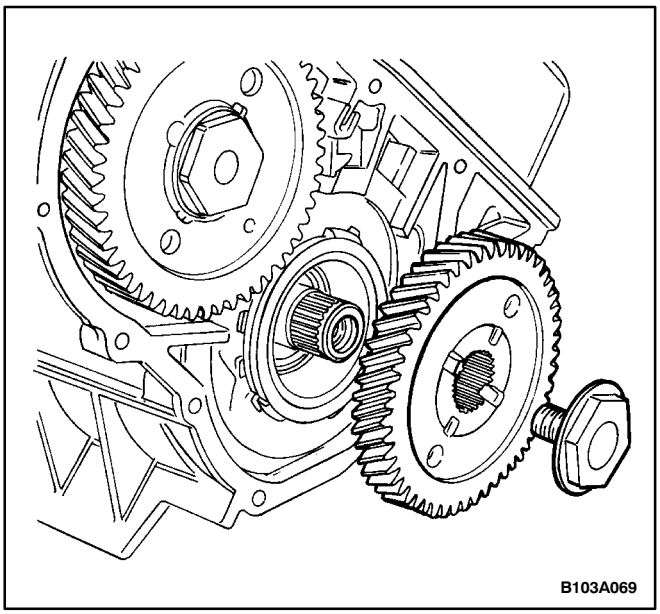

31. Remove the securing bolt on the smaller spur gear and remove the small spur gear.

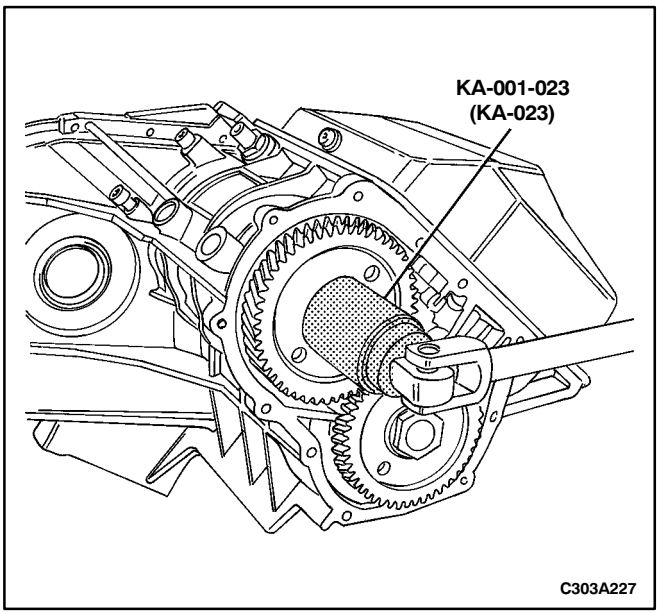

32. Loosen the large spur gear bolt with the bolt remover KA-001-023 (KA-023).

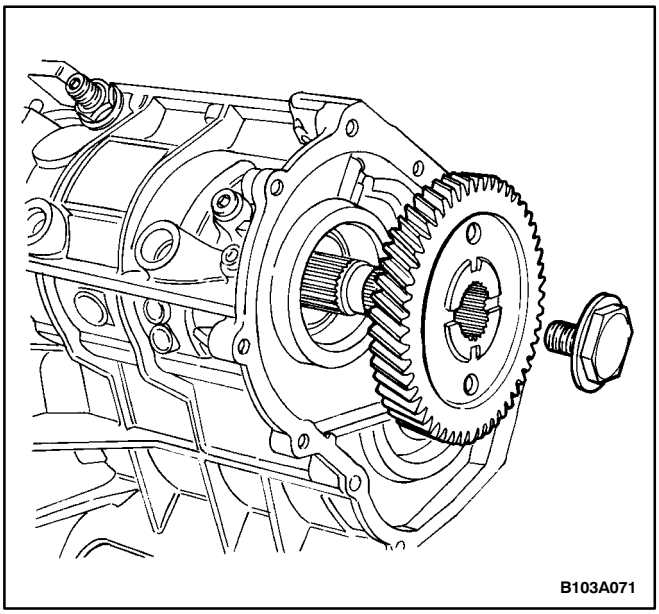

33. Remove the securing bolt on the larger spur gear and remove the large spur gear.

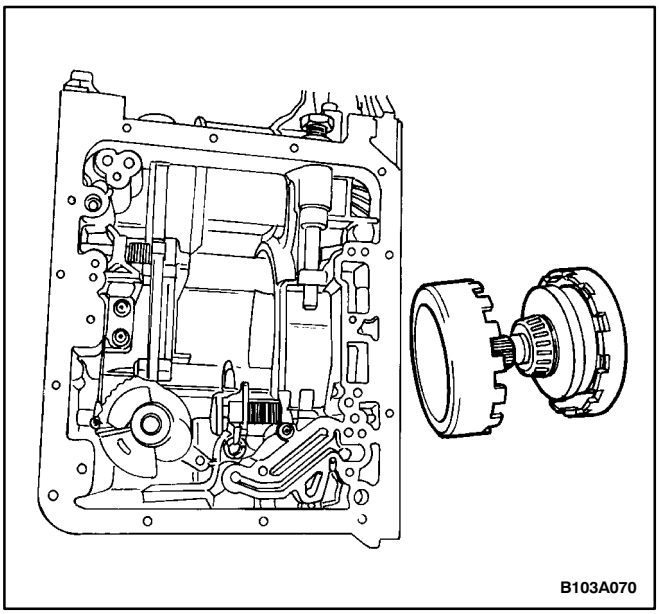

34. Remove the output shaft and the hollow gear together with the web gear.

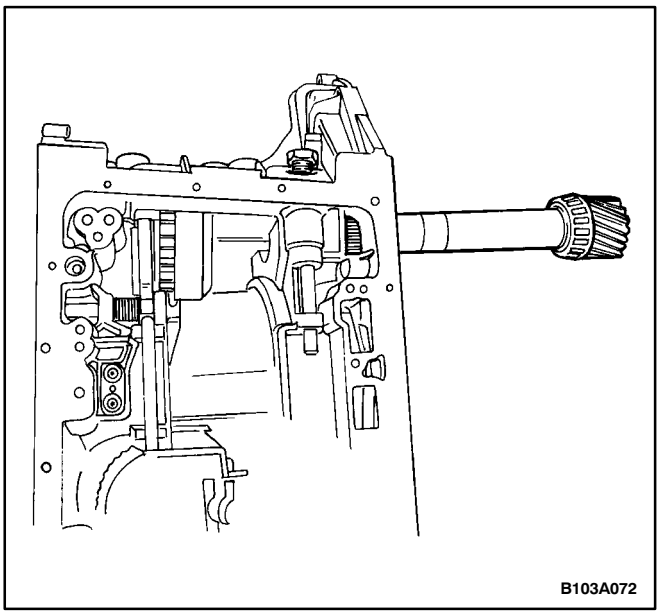

35. Remove the side shaft retainer KA-288 from the side shaft gear.
36. Remove the side shaft.

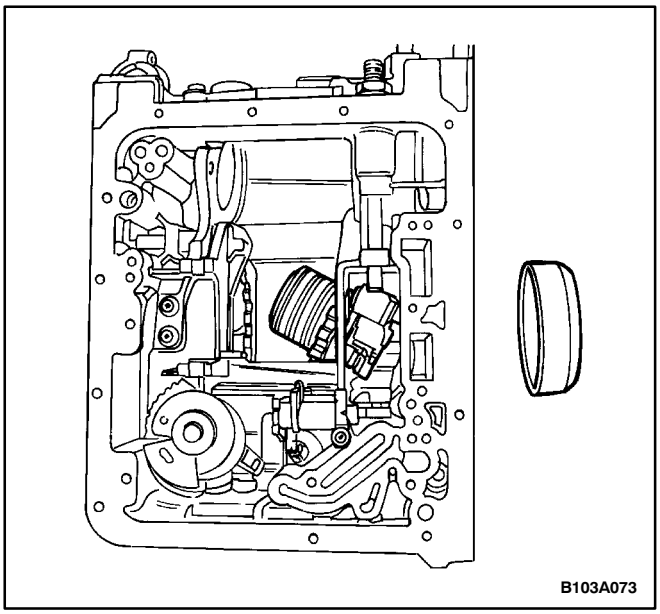

37. Disengage the PARK position and remove the cover plate and the governor assembly.

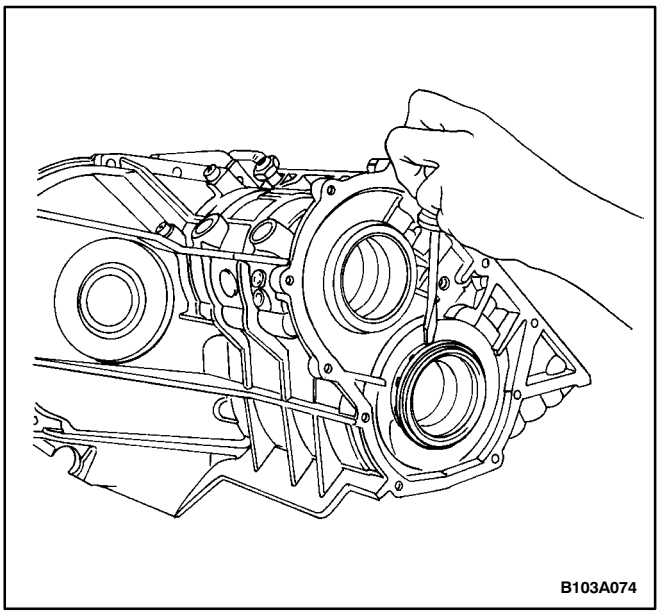

38. Bend the locking tabs on the first freewheel locknut washer.

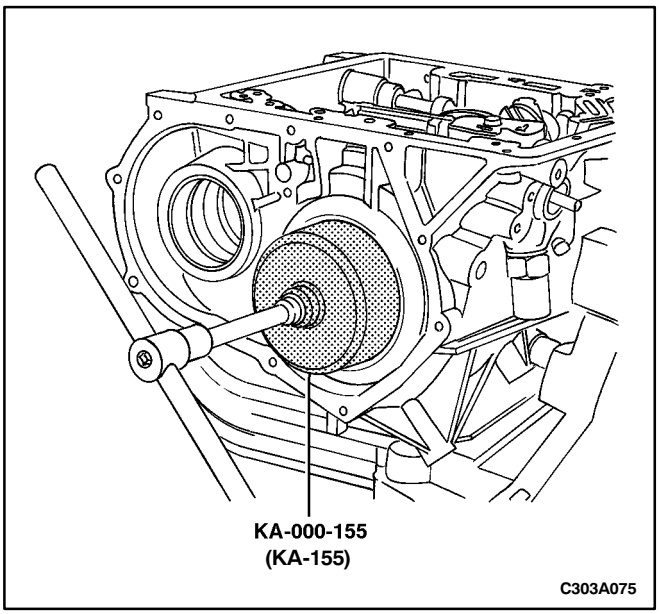

39. Loosen the first freewheel locknut washer using the grooved nut socket KA-000-155 (KA-155).

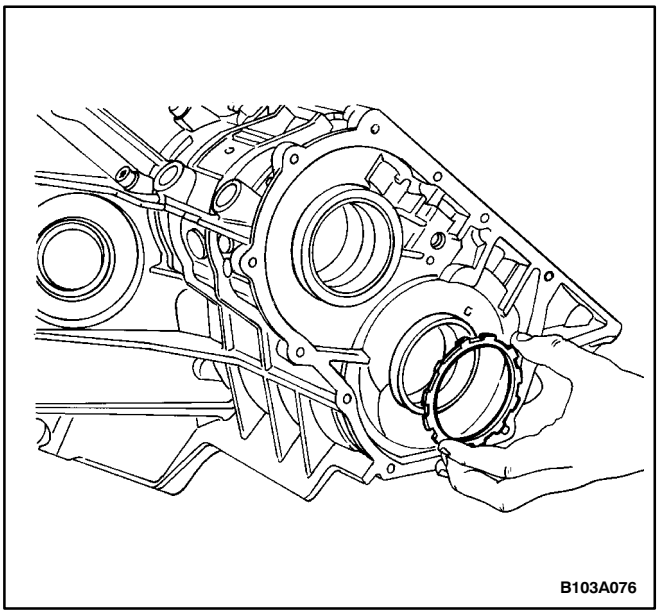

40. Remove the first freewheel locknut washer and the first freewheel ring.

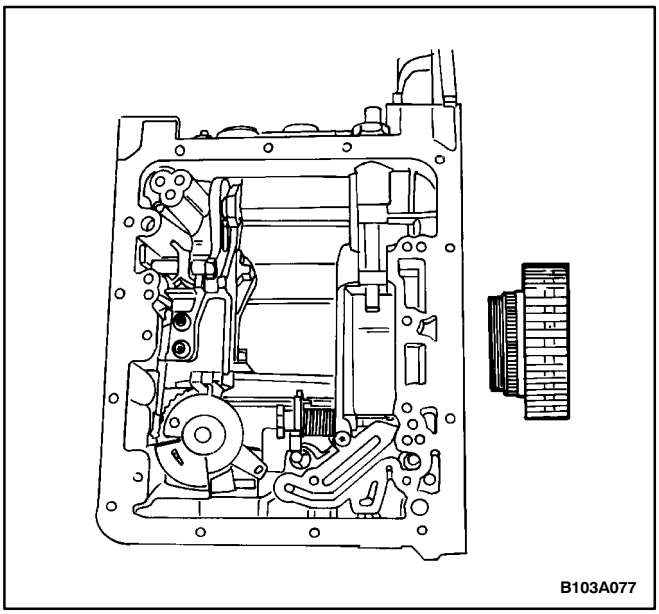

41. Remove the first freewheel.

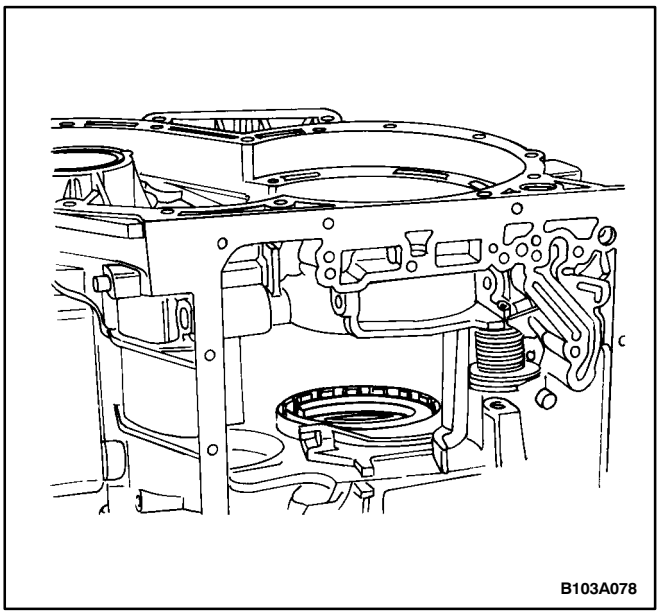

42. Rotate the transaxle 90 degrees so the side shaft outer ring is in the UP position.
43. Remove the brake D snap ring from inside the case.

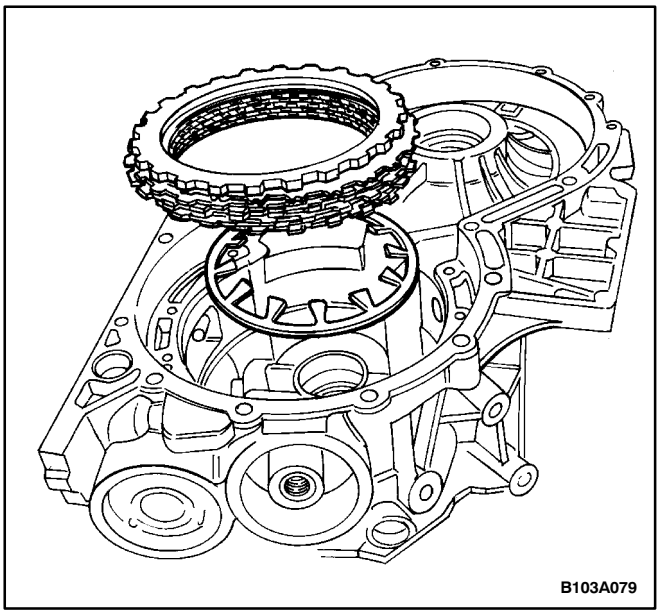

44. Remove the brake D assembly and the plate spring.

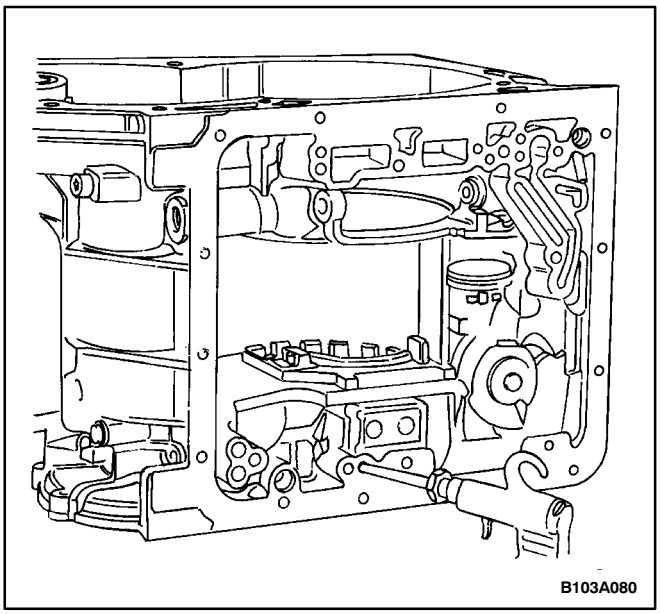

45. Remove the brake D piston by injecting air into the fluid feed hole with an air gun.

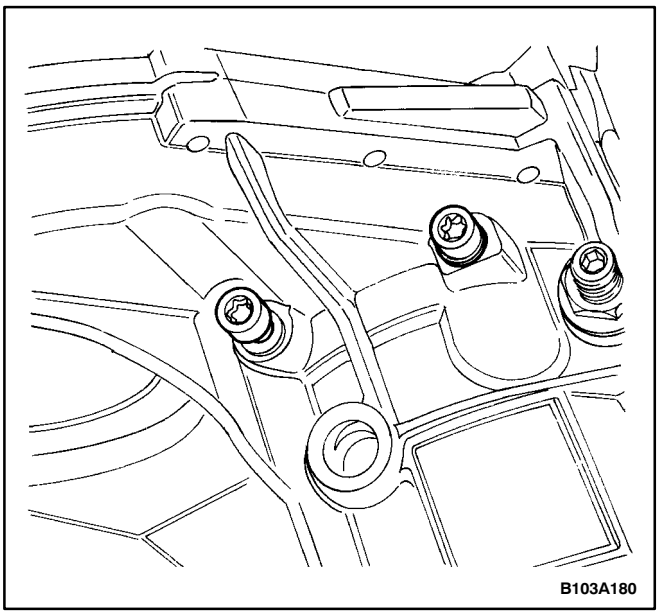

46. Remove the securing bolts from the side shaft outer ring.

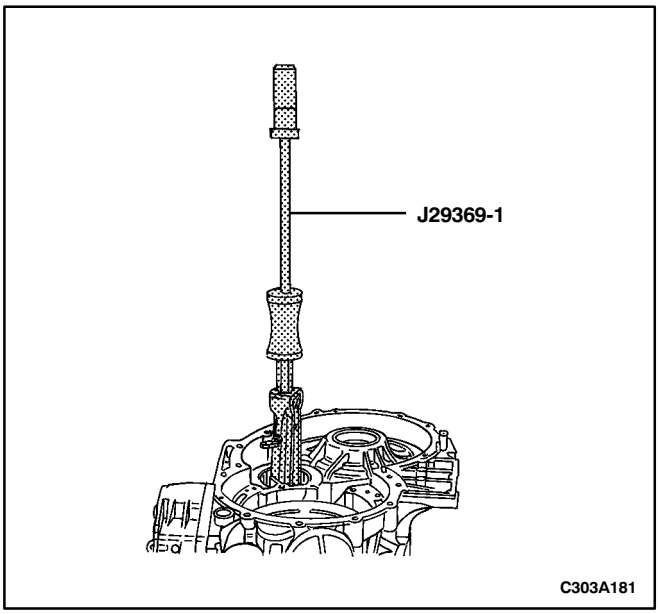

47. Remove the side shaft outer ring with the ring puller J29369-1.

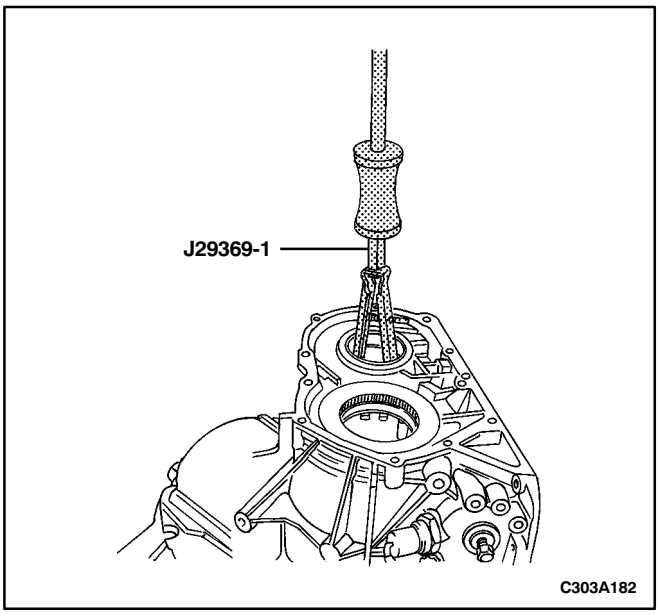

48. Remove the small spur gear con bearing outer ring with the ring puller J29369-1.
49. Inspect and clean the transaxle housing.

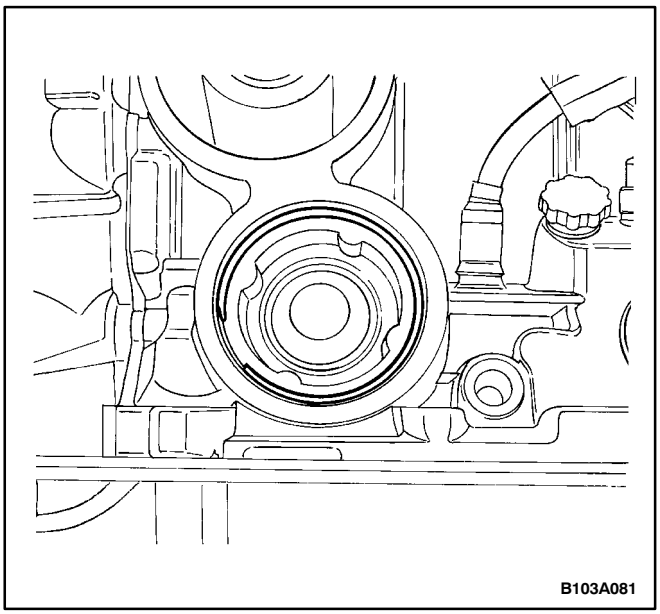

BRAKE C′

Disassembly Procedure

1. Remove the transaxle from the vehicle. Refer to “Transaxle Assembly” in this section.
2. Remove the band C′. Refer to “Major Component Disassembly” in this section.
3. Remove the retaining ring holding the piston C′ cover.

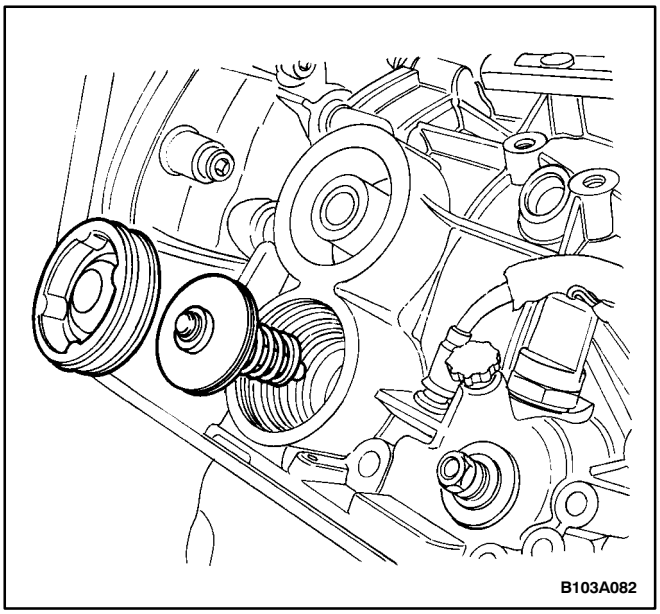

4. Remove the piston C′ cover and the piston C′.

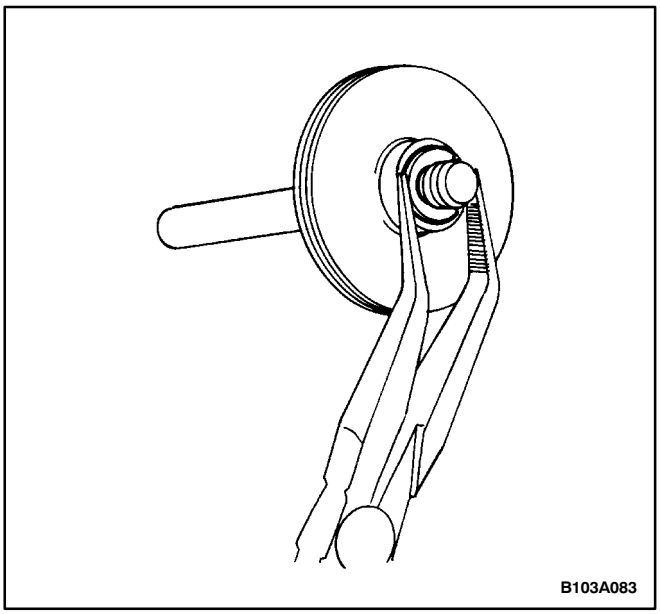

5. Remove the security clip from the piston C′.

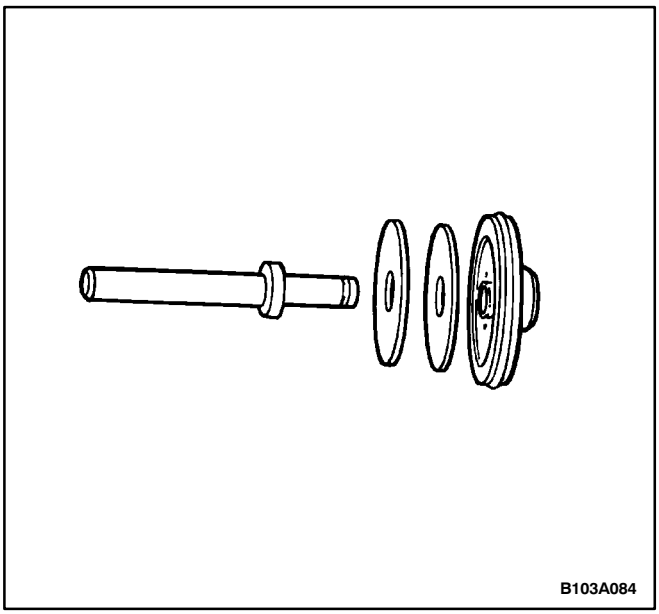

6. Separate the piston C′, the piston rod, and the plate washers.

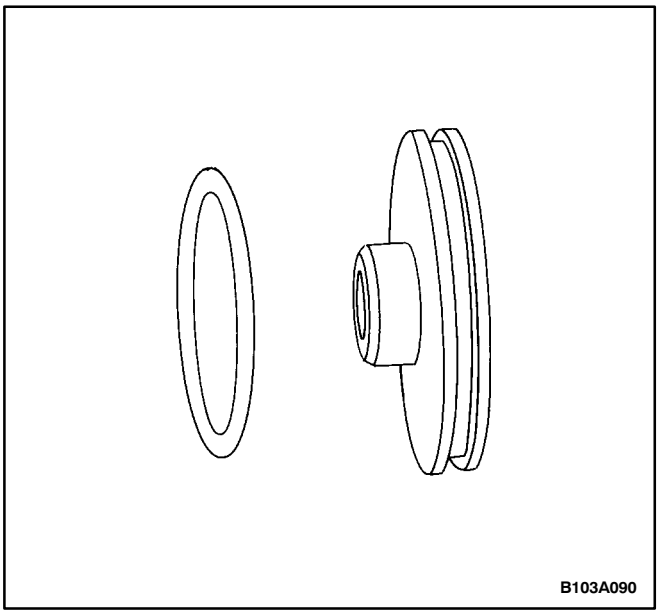

7. Remove the O-ring from the piston C′.

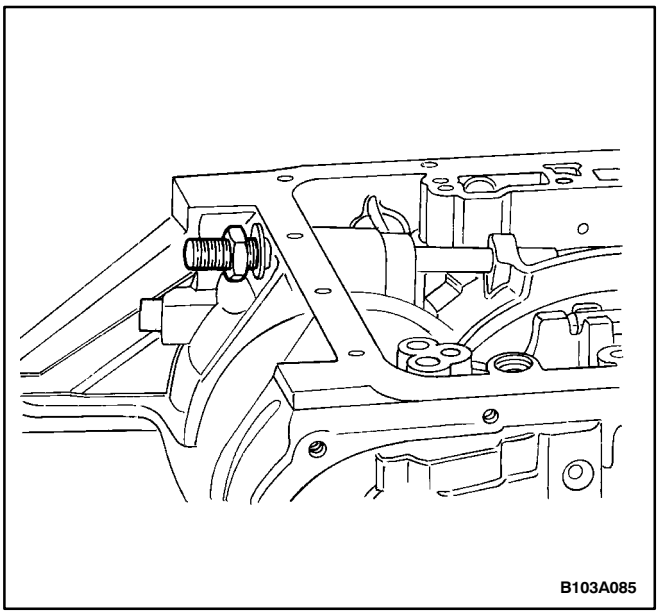

8. Loosen the locknut and unscrew the adjusting bolt.

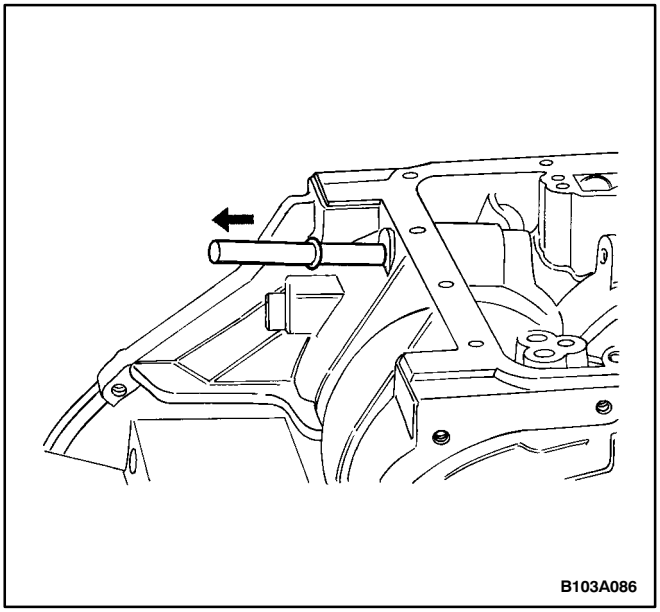

9. Remove the band C′ shaft from the transaxle housing.

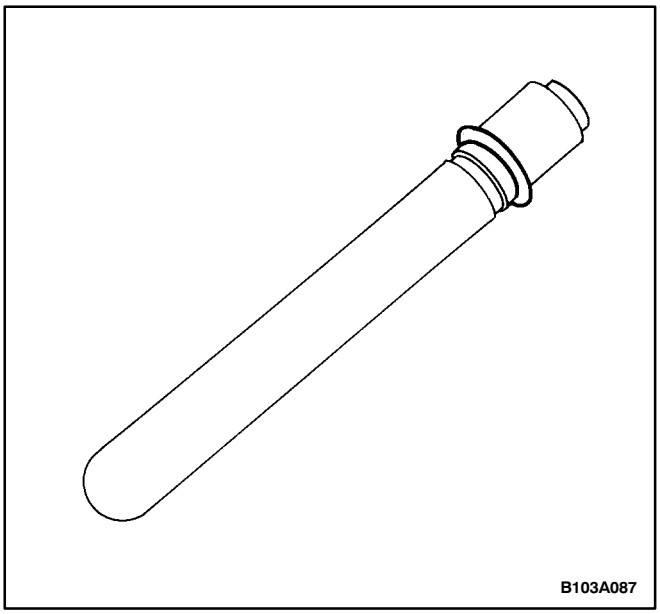

10. Remove the O-ring from the band C′ shaft.

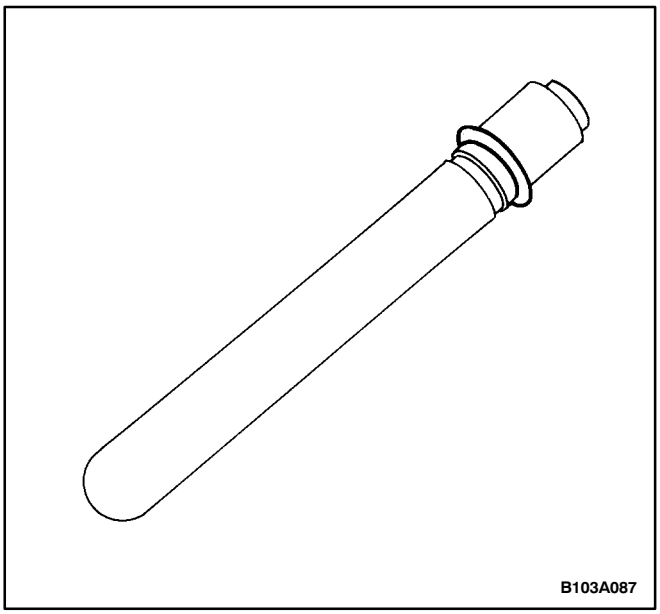

Assembly Procedure

1. Install the O-ring onto the band C′ shaft.

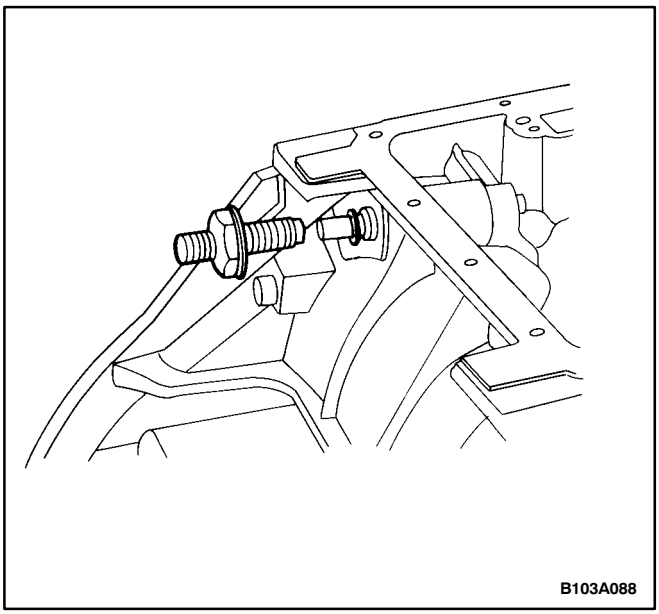

2. Insert the band C′ shaft into the transmission housing. Assemble the adjusting bolt, the washer, and the nut. Screw the assembly half of the way into the transmission housing.

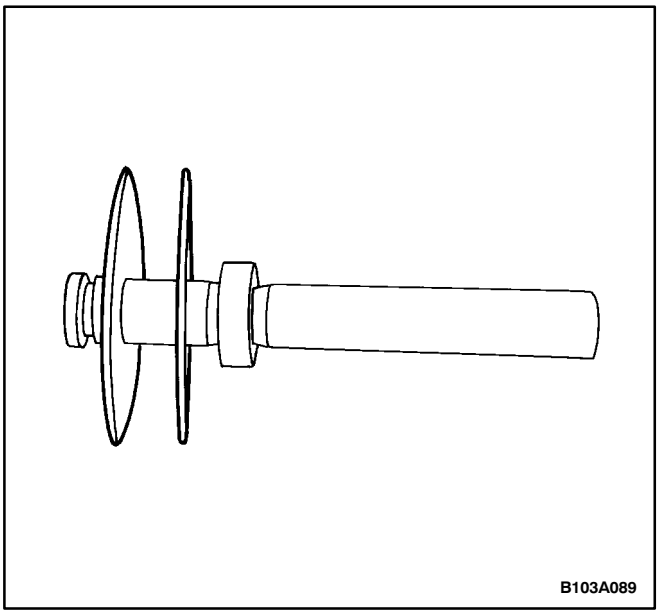

Important: Both plate washers are convex. They should face each other as they are assembled on the piston rod, or the brake will not work properly.

3. Install the plate washers onto the piston rod. The thick one goes on the piston rod before the thin one.

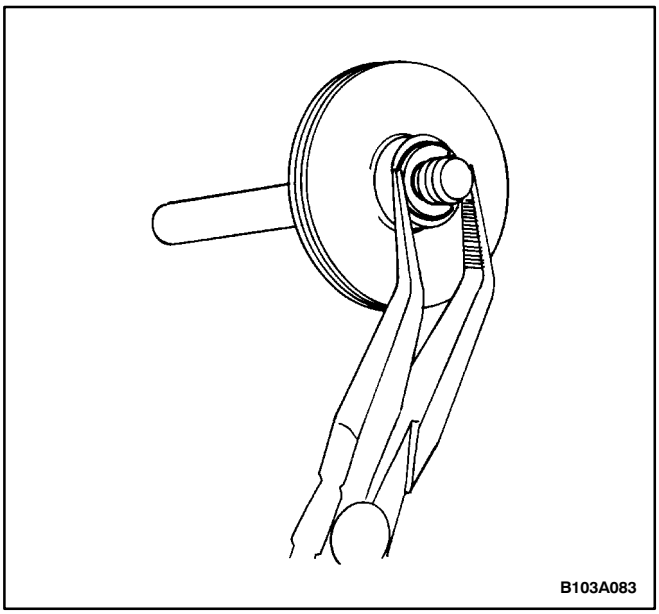

4. Install a new O-ring onto the piston C′ and install the piston C′ onto the piston rod. Install the security clip onto the piston rod.

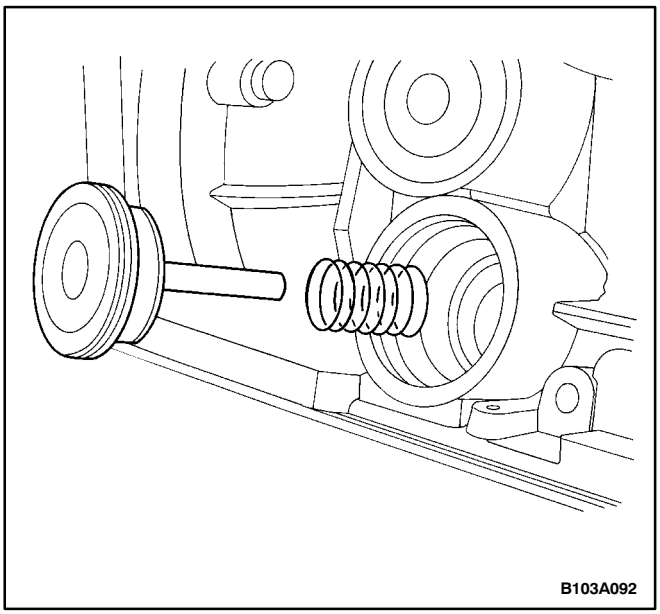

5. Install the spring onto the piston rod and insert the piston C′ into the transaxle housing.

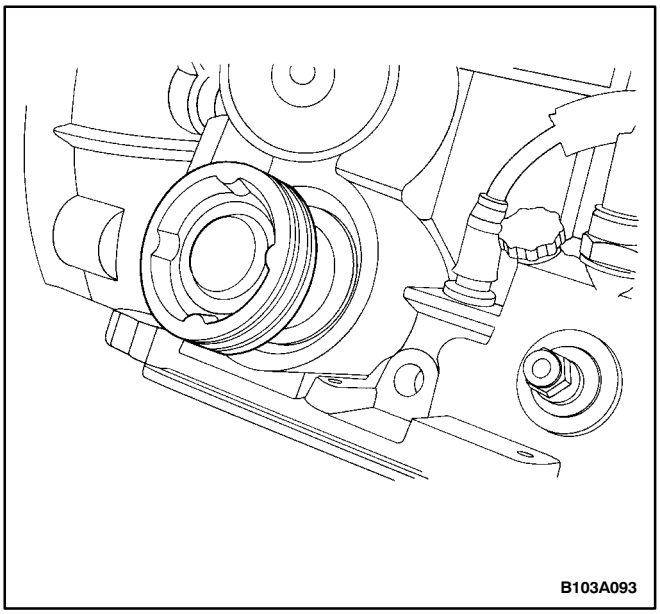

6. Install the piston C′ cover.

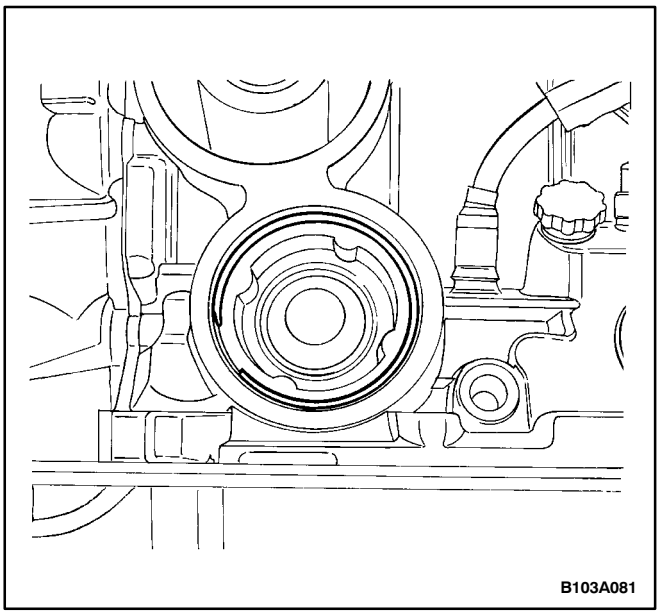

7. Install the retaining ring.
8. Install the band C′. Refer to “Major Component Assembly” in this section.
9. Install the transaxle into the vehicle. Refer to “Transaxle Assembly” in this section.

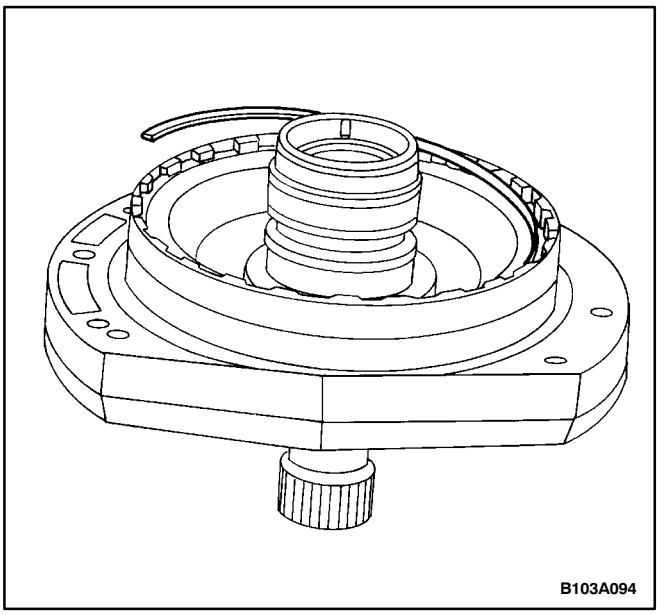

INTERMEDIATE PLATE WITH BRAKE C AND PUMP

Tools Required

KA-000-914 Compression Adapter

Disassembly Procedure

1. Remove the transaxle from the vehicle. Refer to “Transaxle Assembly” in this section.
2. Remove the intermediate plate with the brake C and the pump. Refer to “Major Component Disassembly” in this section.
3. Remove the snap ring that secures the brake C assembly.

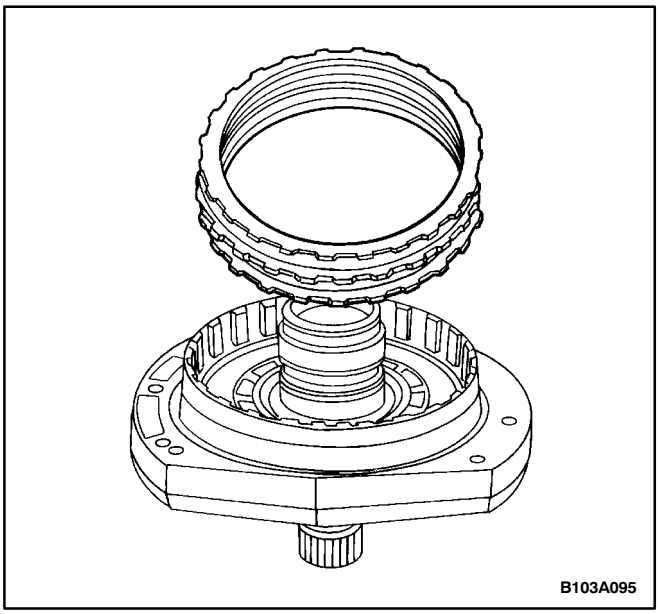

4. Remove the brake C assembly.

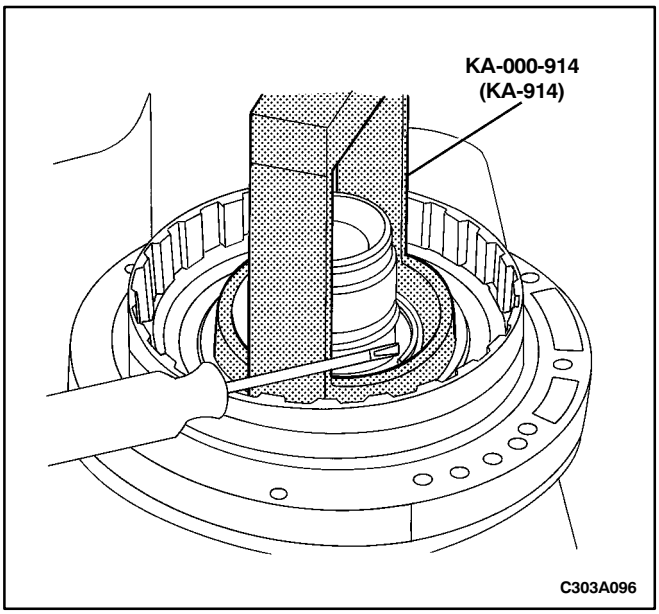

5. Press down the plate spring with the compression adapter KA-000-914 (KA-914) and remove the snap ring with a screwdriver.

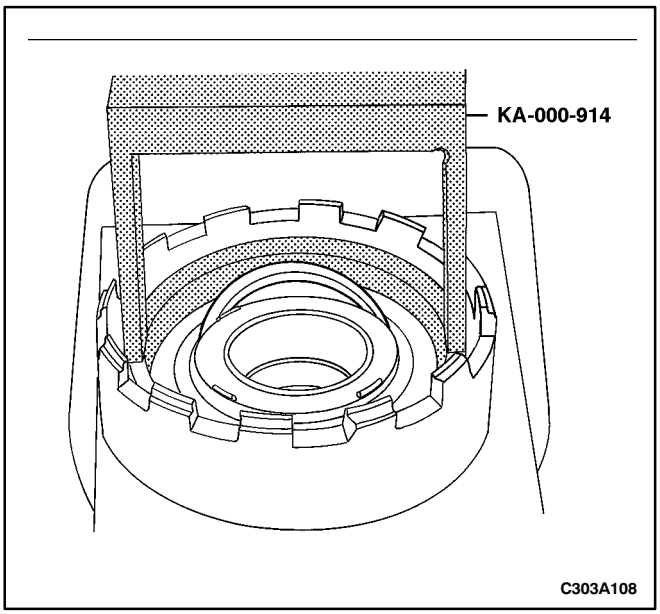

6. Remove the plate spring, the pressure plate, and the retainer ring.

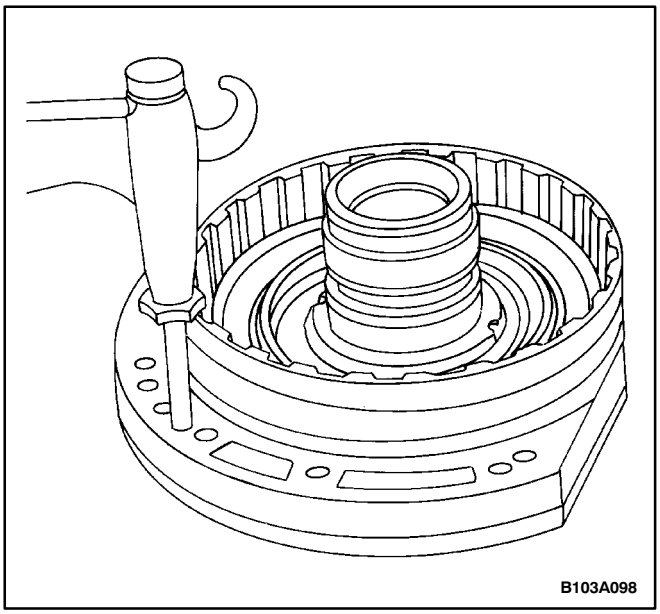

7. Insert an air gun into the fluid feed hole and use air pressure to free the piston C.

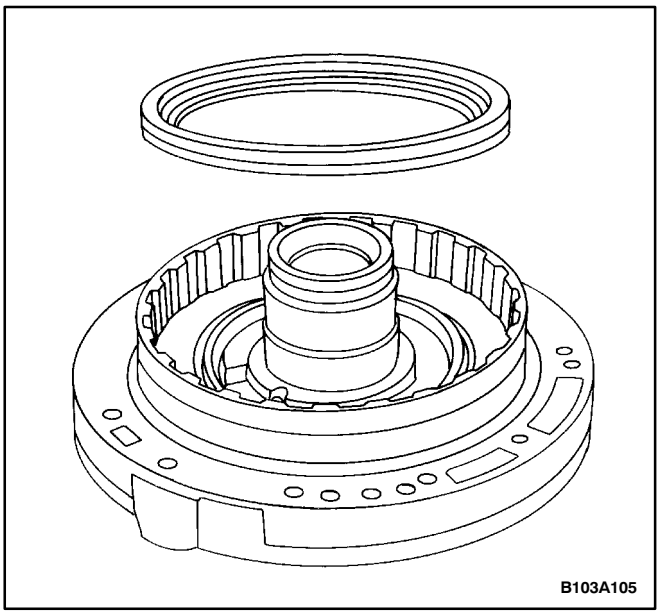

8. Remove the piston C.

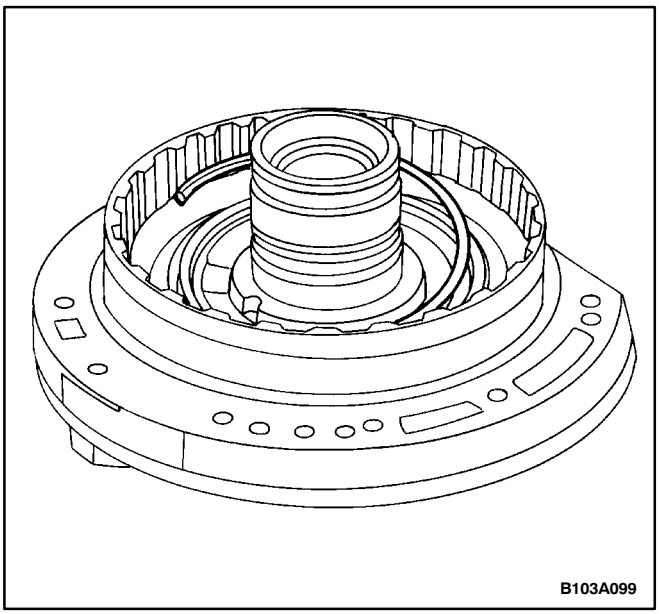

9. Remove the intermediate ring snap ring and the intermediate ring. Replace the O-ring on the intermediate ring as needed.

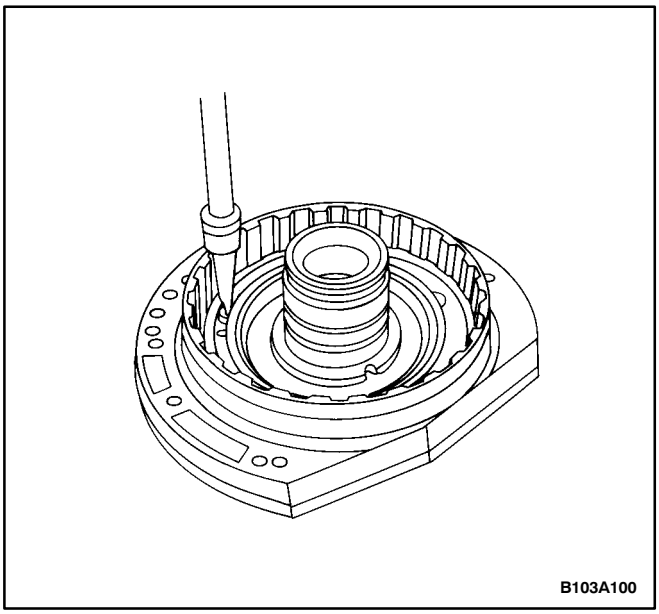

10. Remove the intermediate plate connecting bolts from the pump assembly.

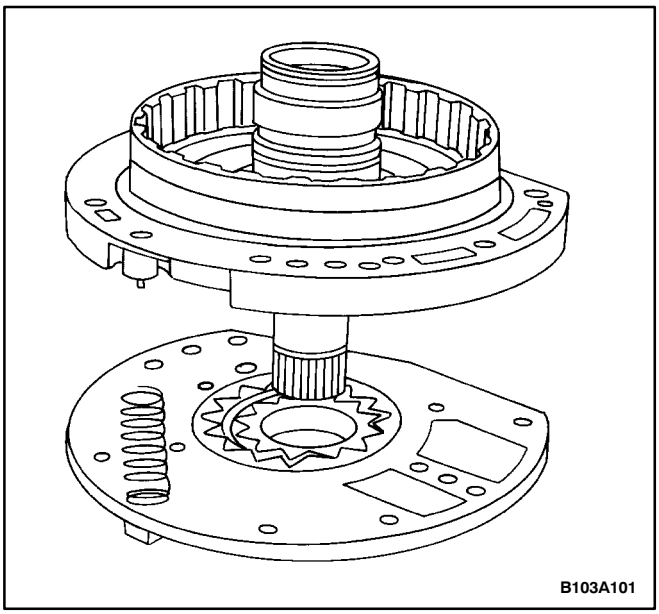

11. Separate the intermediate plate from the pump assembly. Use a plastic hammer for disassembly.

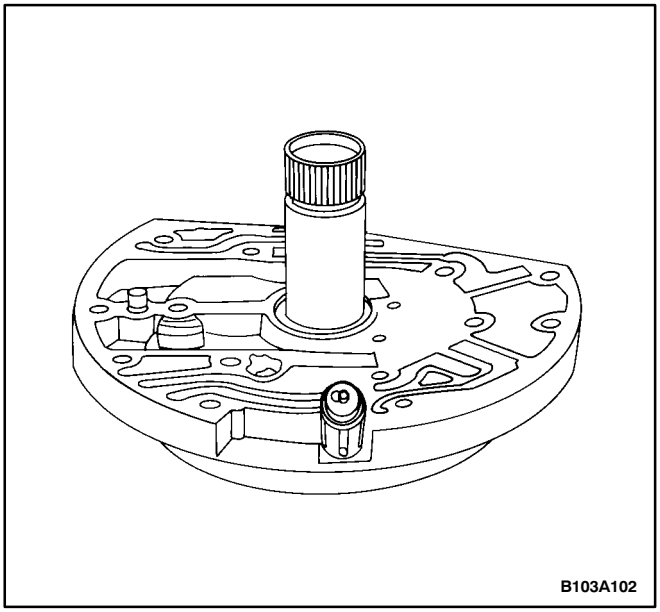

12. Remove the spring, the torque converter valve, and the cap.

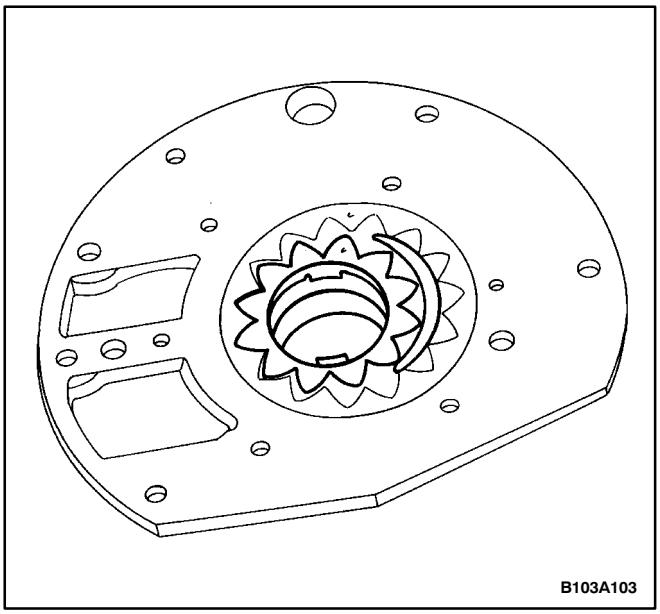

13. Remove the pump hollow gear and the pump gear from the pump housing.

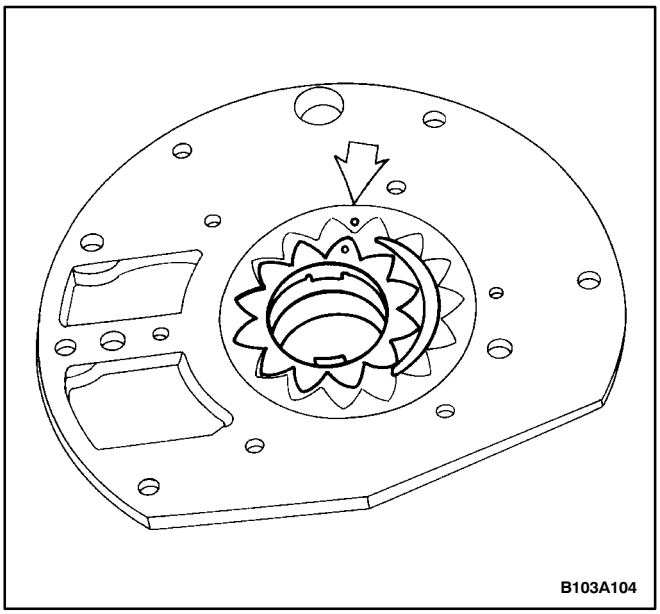

Assembly Procedure

1. Install the pump hollow gear and the pump gear into the pump housing with the marked side of the gears facing upward.

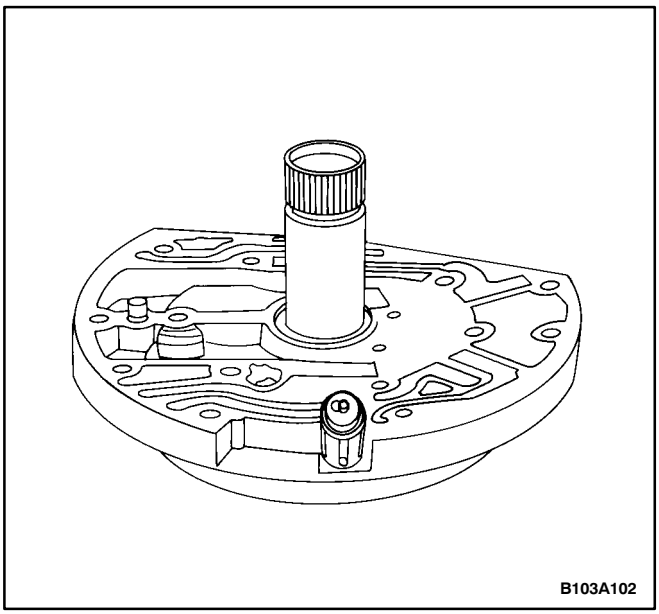

2. Install the spring, the torque converter valve, and the cap.

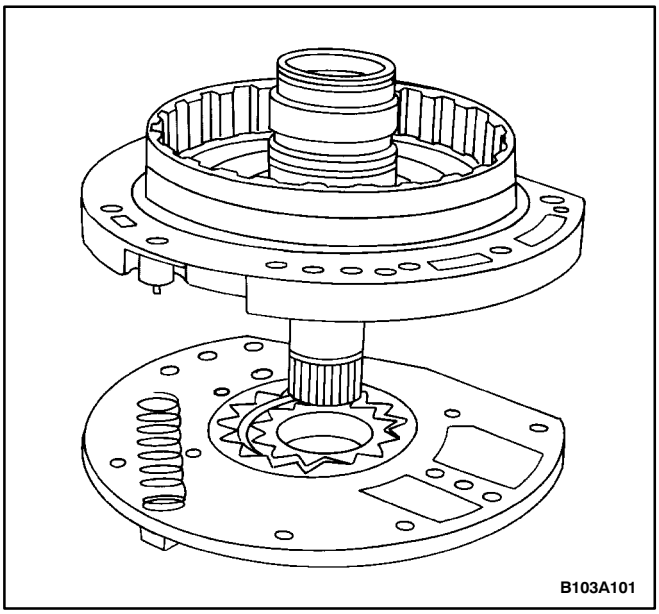

3. Insert the spring into the open gap and align the intermediate plate onto the pump housing.

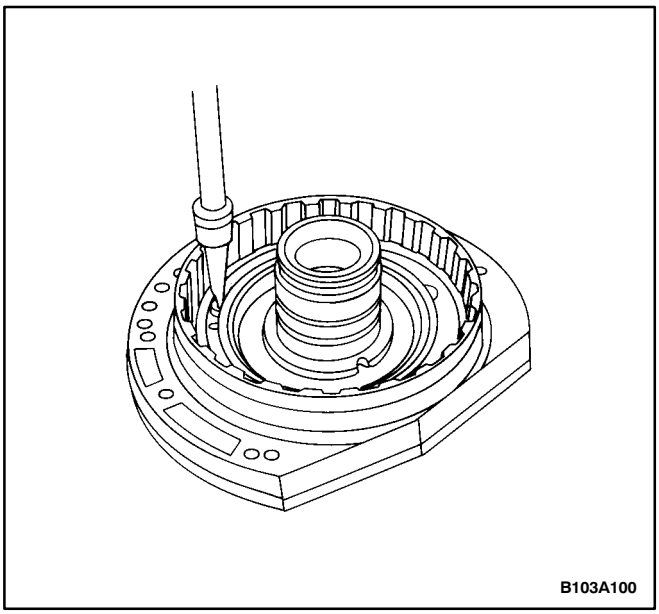

4. Install the intermediate plate connecting bolts into the pump assembly.

Tighten

Tighten the intermediate plate-to-pump assembly connecting bolts to 10 N•m (89 lb-in).

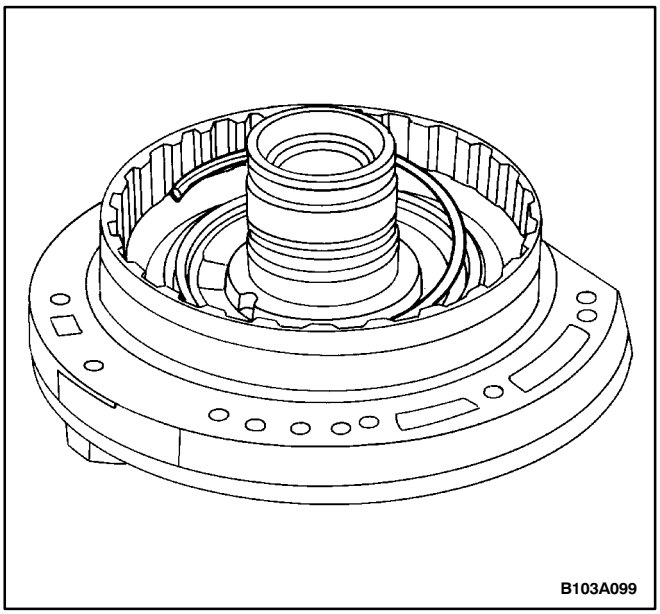

5. Install the intermediate ring and secure it with the intermediate ring snap ring.

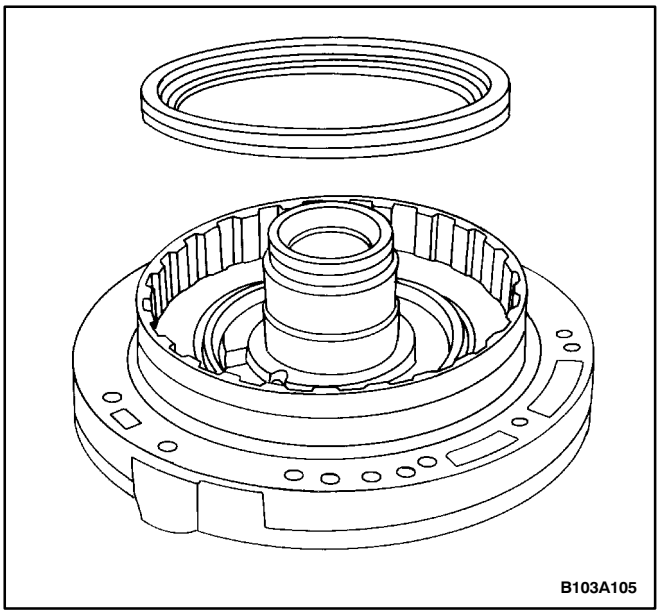

6. Install the piston C.

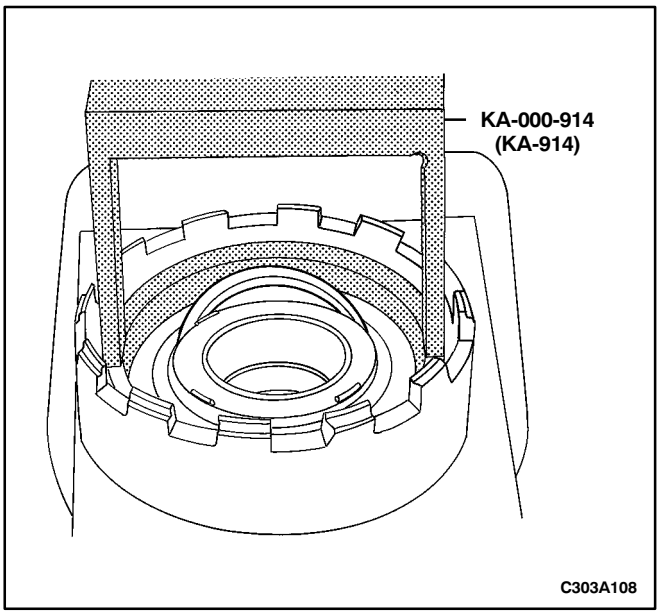

7. Install the plate spring, pressure plate, and the retainer ring.

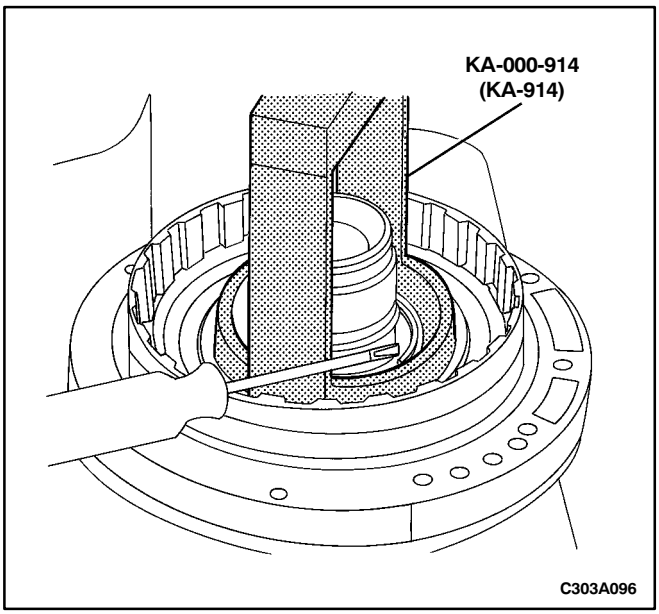

8. Press down the plate spring with the compression adapter KA-000-914 (KA-914) and install the snap ring.

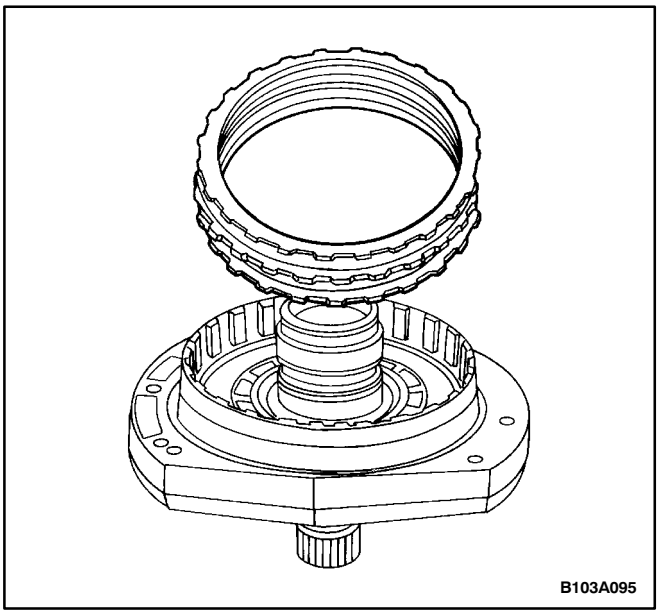

9. Install the brake C assembly.

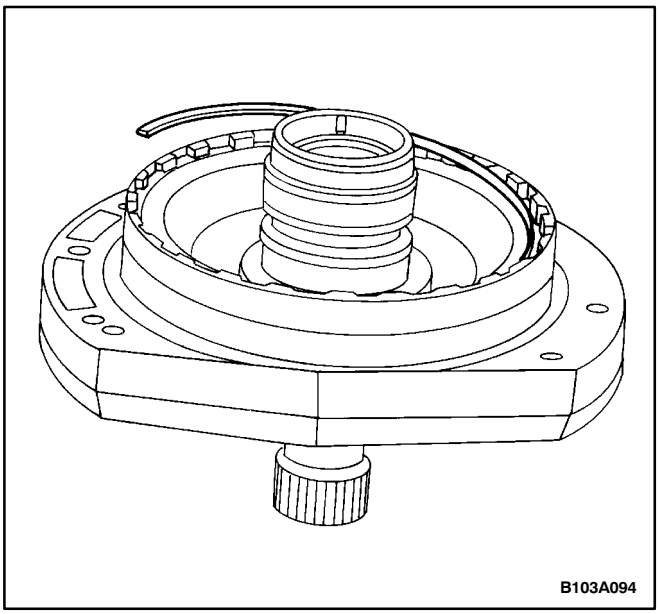

10. Install the snap ring that secures the brake C assembly.
11. Install the intermediate plate with the brake C and the pump. Refer to “Major Component Assembly” in this section.
12. Install the transaxle into the vehicle. Refer to “Transaxle Assembly” in this section.

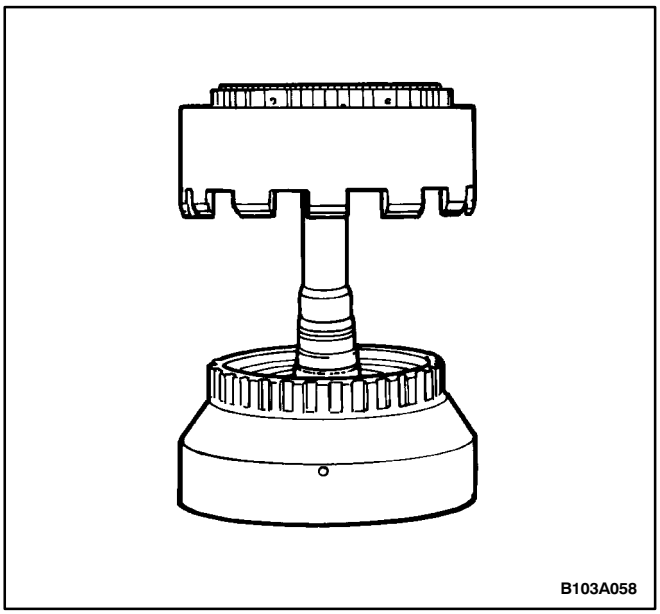

CLUTCH B WITH FREEWHEEL SECOND GEAR

Tools Required

KA-000-914 Compression Adapter

Disassembly Procedure

Important: The freewheel second gear should not be disassembled. Replace this part as a unit.

1. Remove the transaxle from the vehicle. Refer to “Transaxle Assembly” in this section.
2. Remove the clutch A, the clutch B and the freewheel second gear assembly from the transaxle housing. Refer to “Major Component Disassembly” in this section.
3. Separate the clutch A from the clutch B and the freewheel second gear assembly.

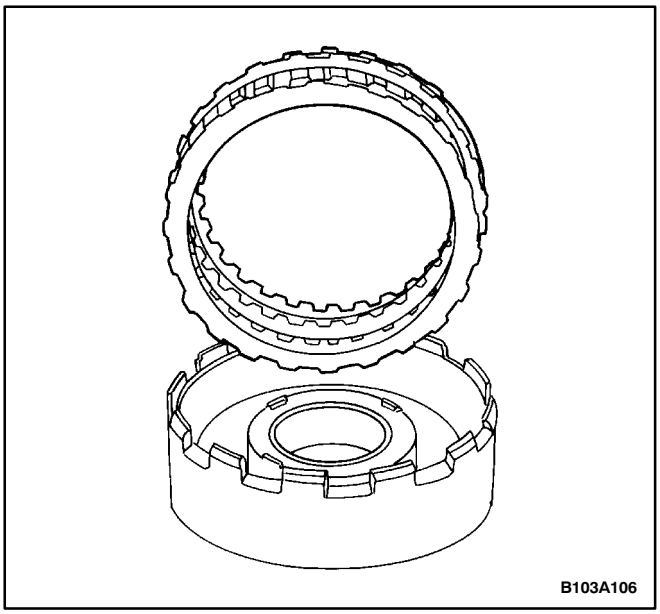

4. Remove the snap ring and the clutch B assembly.

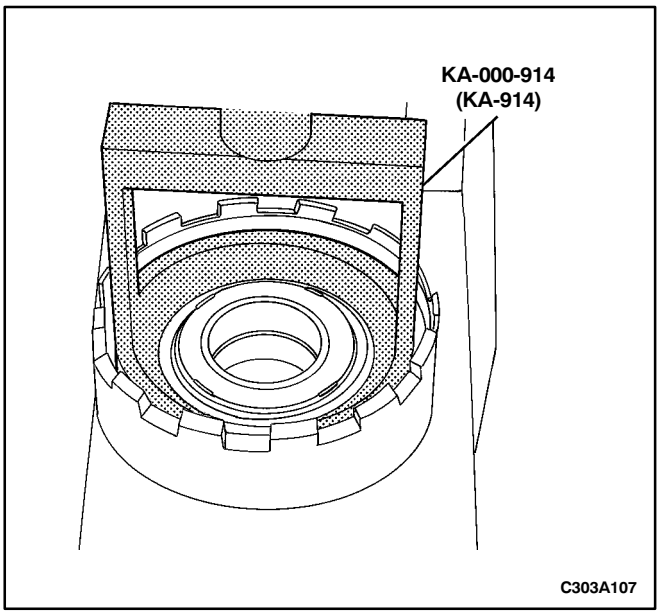

5. Compress the pressure plate using the compression adapter KA-000-914 (KA-914).

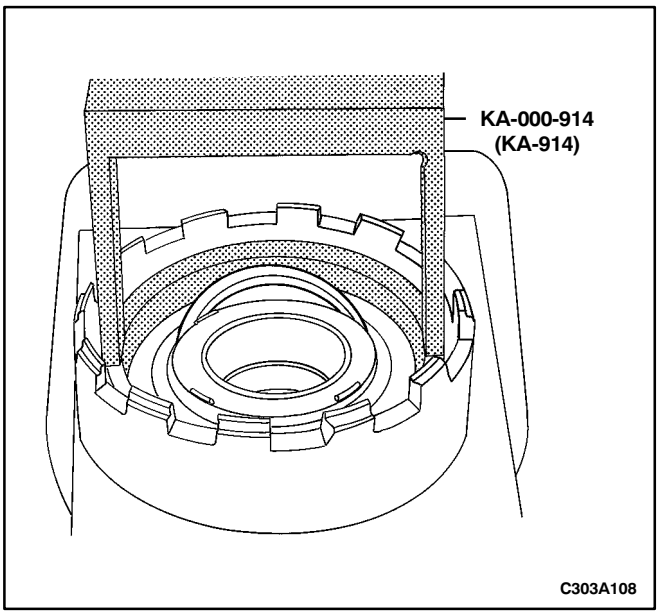

6. Remove the retainer rings and the thrust washers.

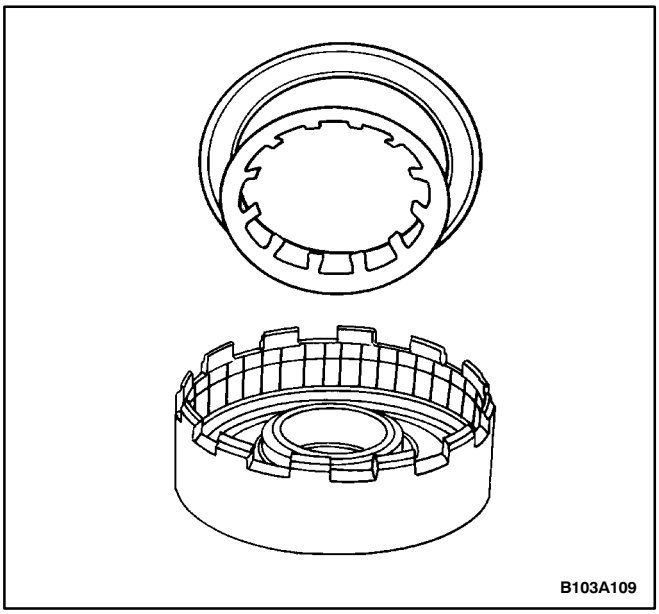

7. Remove the compression adapter KA-000-914.
8. Remove the plate spring and the pressure plate.

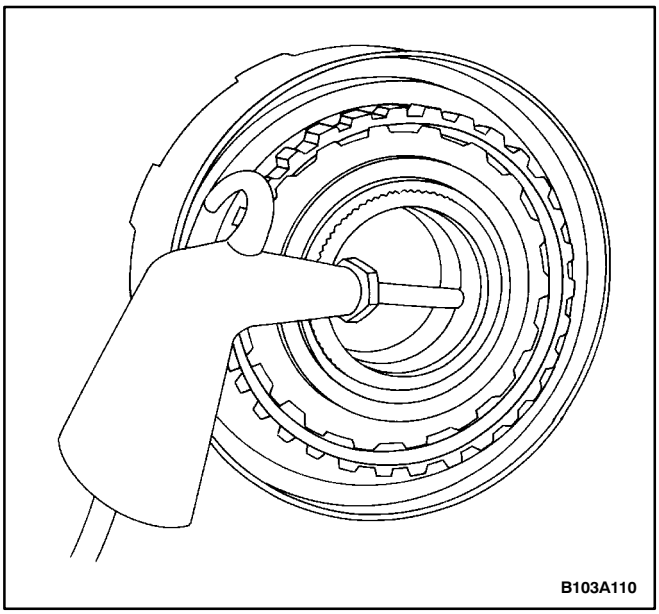

9. Insert compressed air into the fluid feed hole for the removal of the piston B.

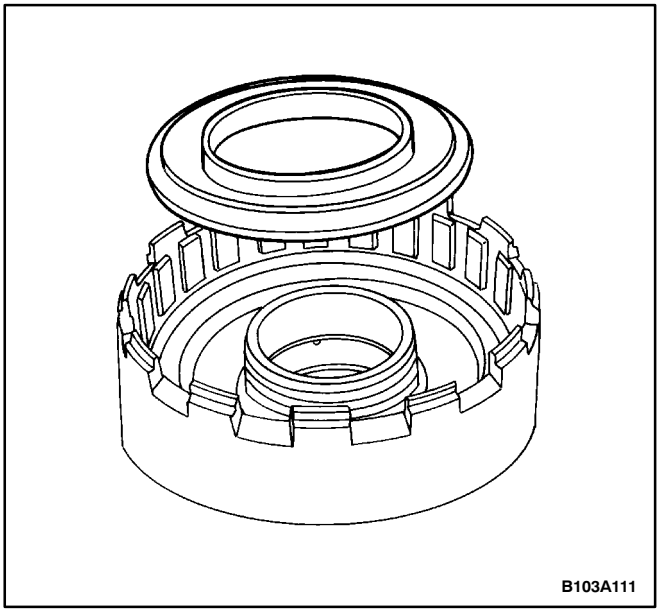

10. Remove the piston B. Replace the O-ring as needed.

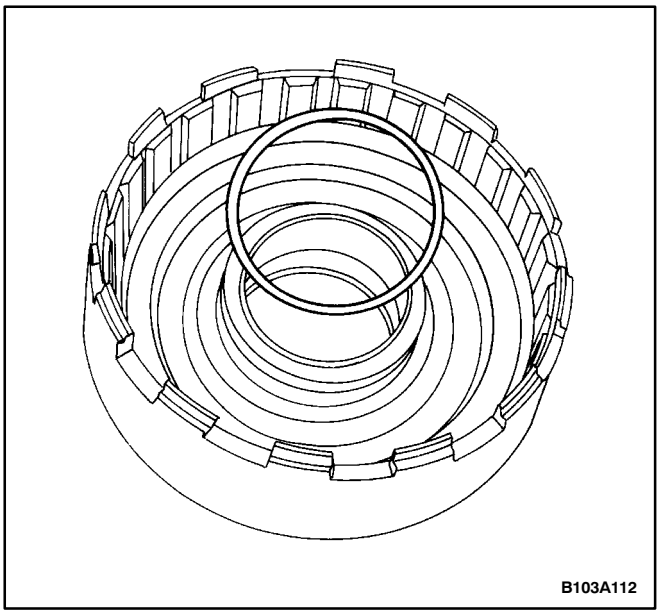

11. Replace the cylinder B O-ring as needed.

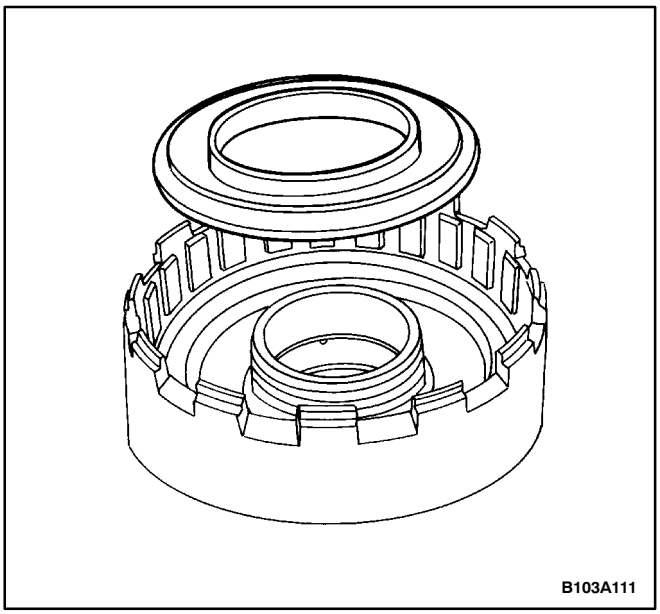

Assembly Procedure

1. Install the piston B.

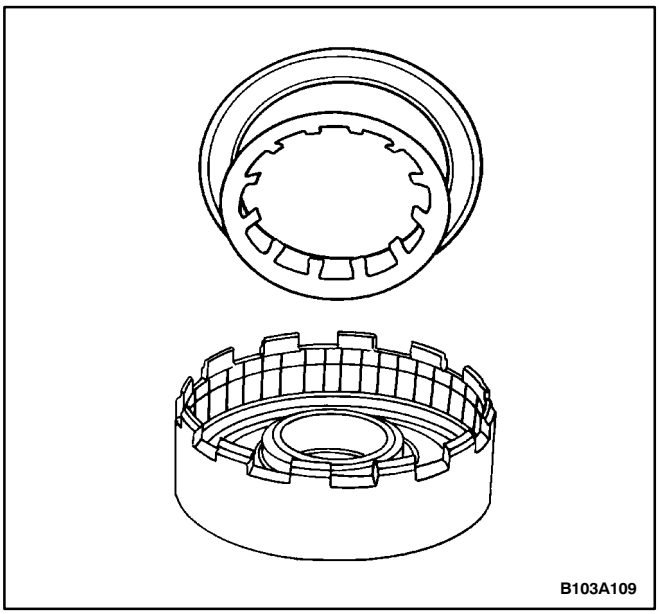

2. Install the plate spring and the pressure plate.

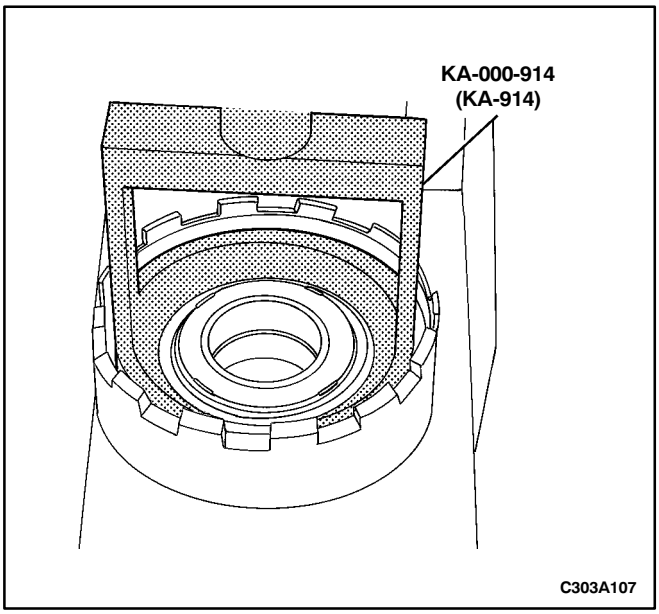

3. Compress the pressure plate using the compression adapter KA-000-914 (KA-914).

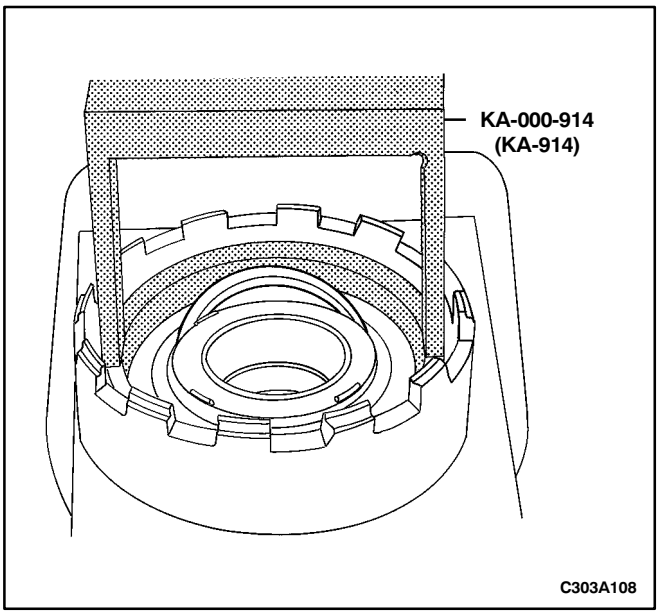

4. Install the retainer rings and the thrust washers.

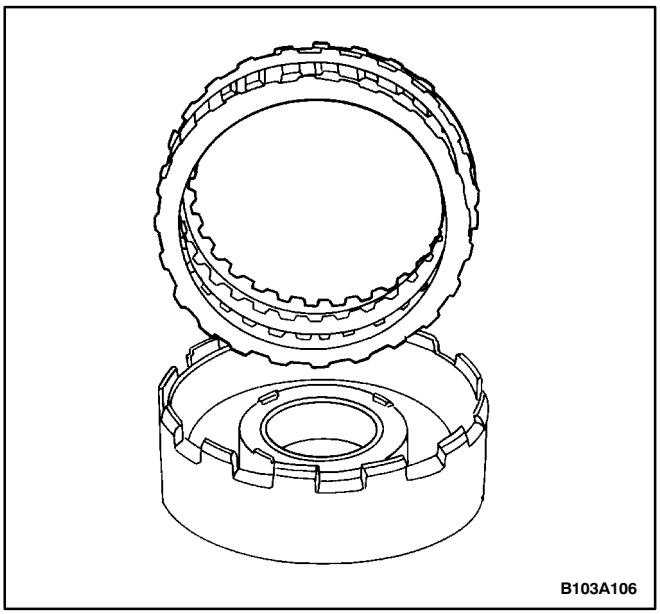

5. Install the clutch B assembly.

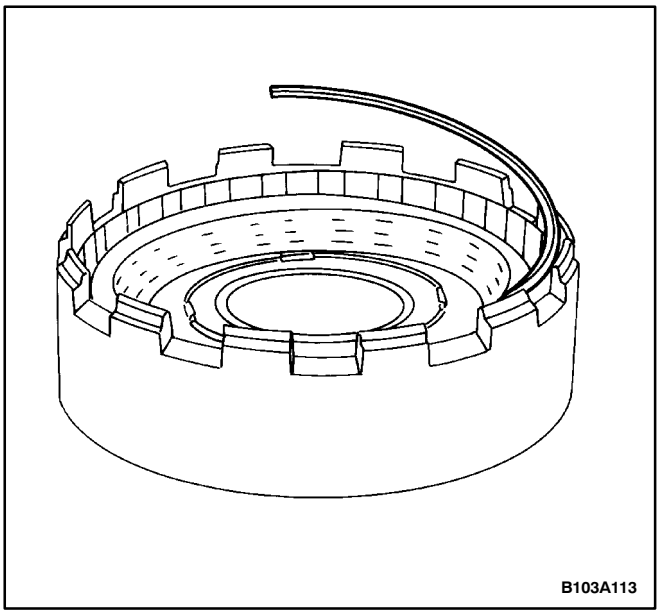

6. Install the clutch B assembly snap ring.

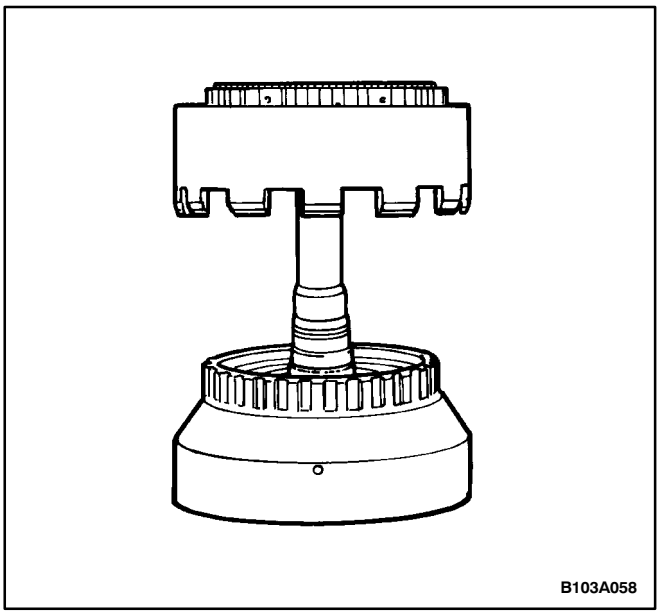

7. Join the clutch A, the clutch B, and the freewheel second gear into an assembly.
8. Install the clutch A, the clutch B, and the freewheel second gear assembly into the transaxle housing. Refer to “Major Component Assembly” in this section.
9. Install the transaxle into the vehicle. Refer to “Transaxle Assembly” in this section.

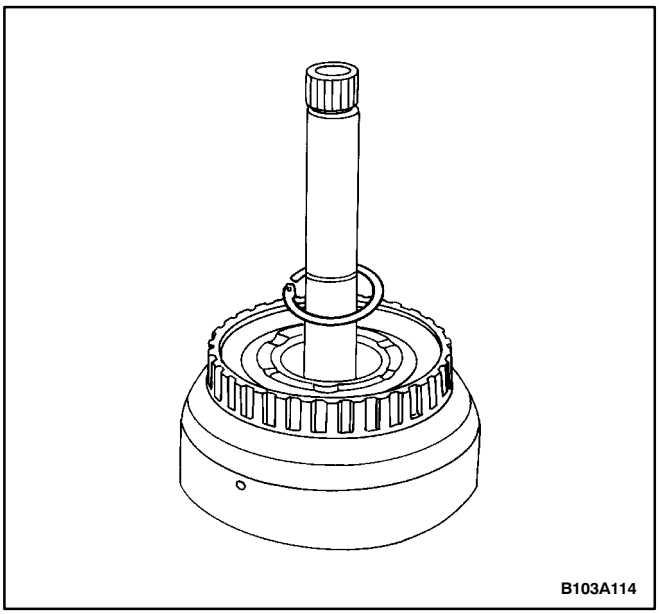

CLUTCH A

Tools Required

KA-000-913 Compression Adapter

Disassembly Procedure

1. Remove the transaxle form the vehicle. Refer to “Transaxle Assembly” in this section.
2. Remove the clutch A from the transaxle housing. Refer to “Major Component Disassembly” in this section.
3. Remove the clutch A snap ring.

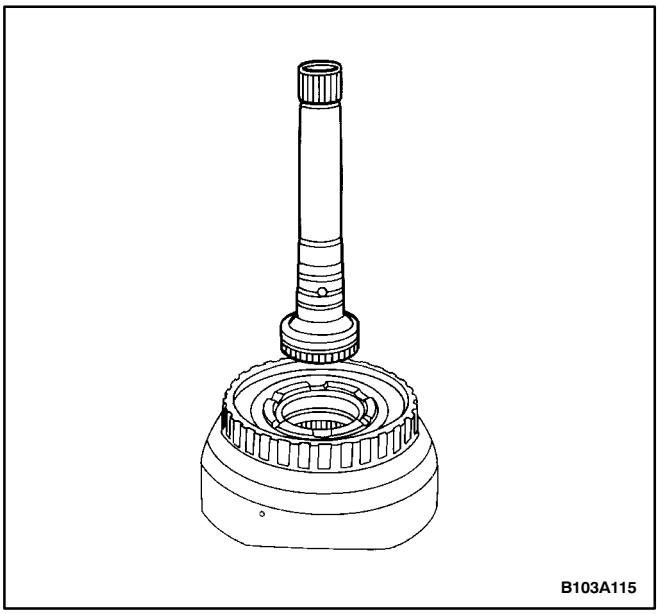

4. Remove the turbine shaft.

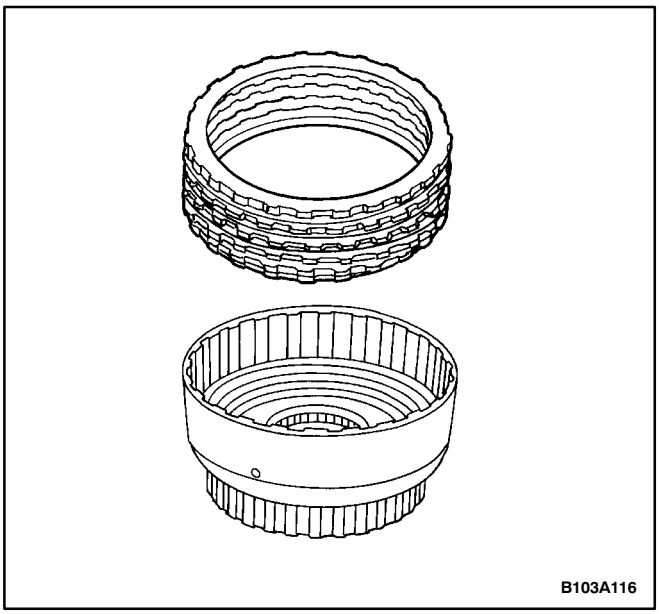

5. Remove the snap ring and the clutch A assembly.

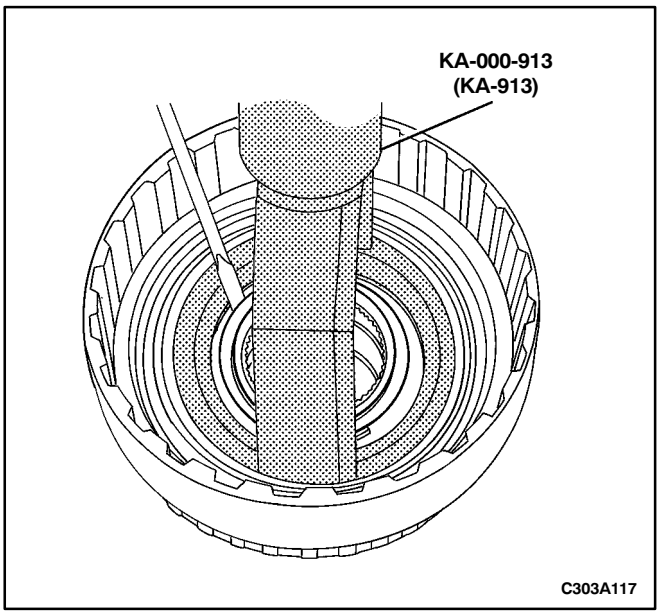

6. Compress the piston with the compression adapter KA-000-913 (KA-913) and remove the snap ring.

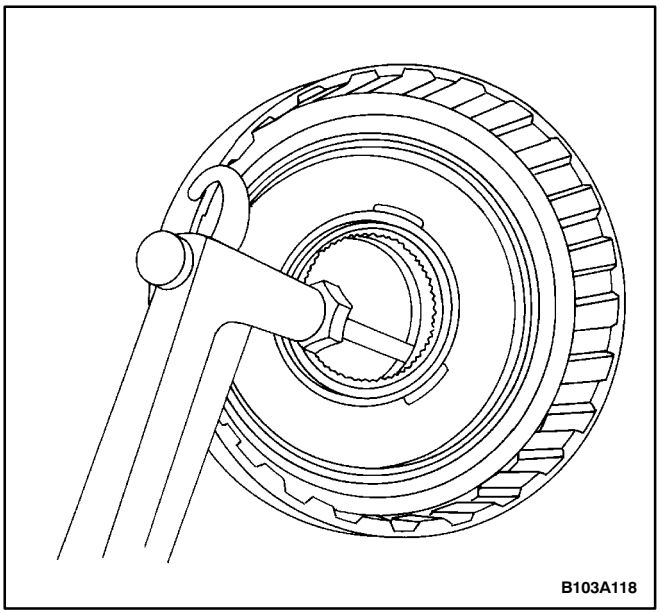

7. Insert compressed air into the fluid feed hole to free the accumulation piston assembly from the clutch A cylinder.

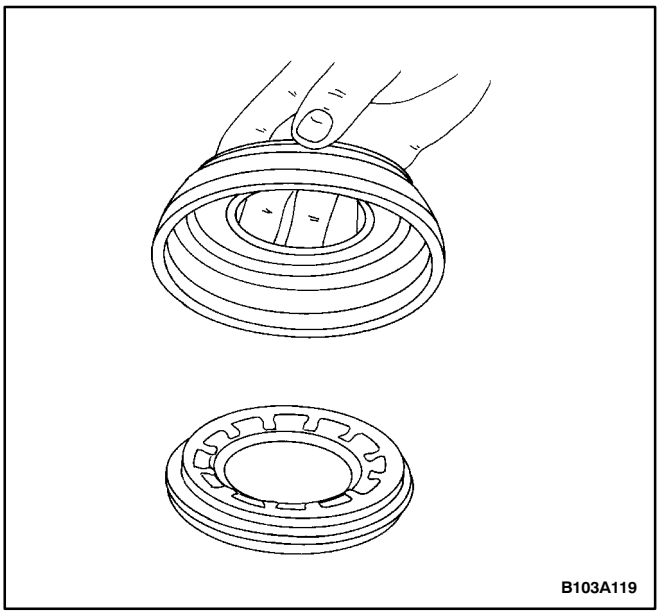

8. Hit the accumulation piston on the work bench lightly to remove the piston A and the plate spring.

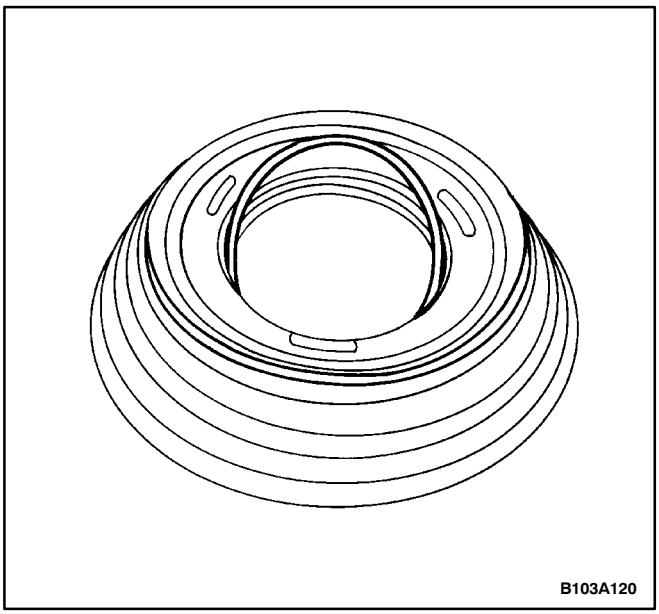

9. Replace the O-rings on the accumulation piston as needed.

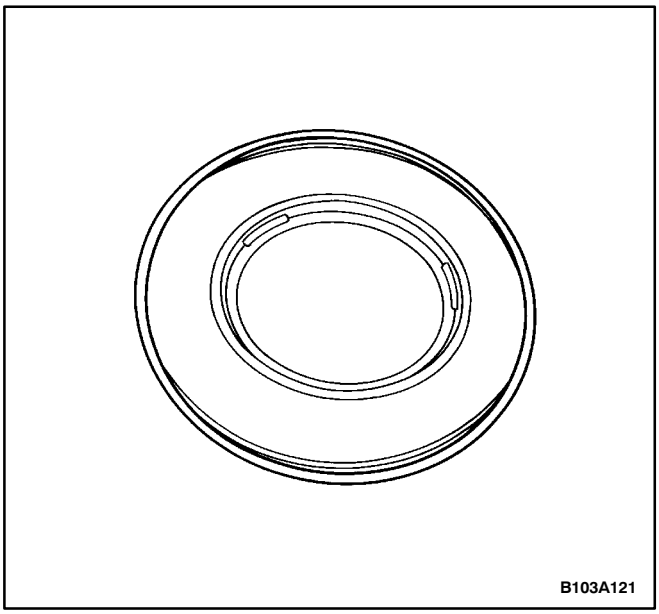

10. Replace the O-ring in the piston A as needed.

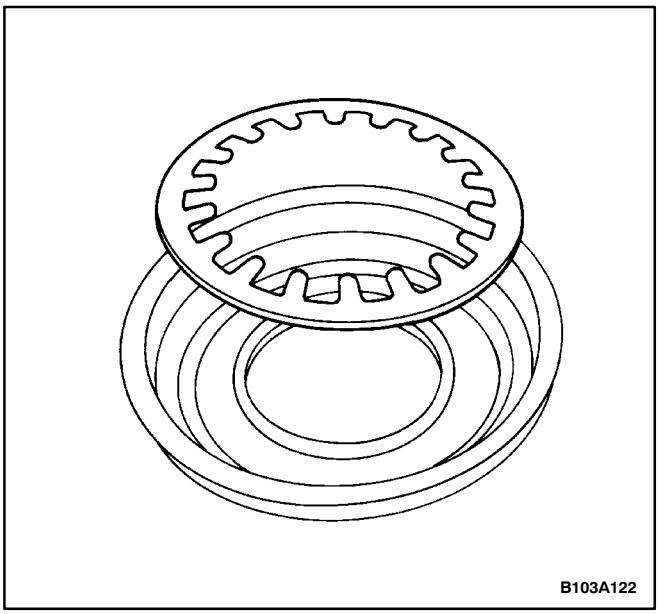

Assembly Procedure

1. Install the plate spring into the accumulation piston.

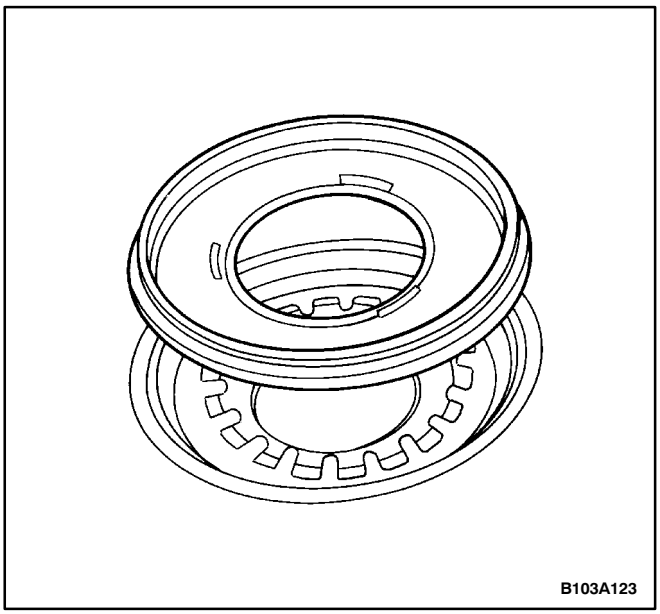

2. Install the piston A into the accumulation piston.

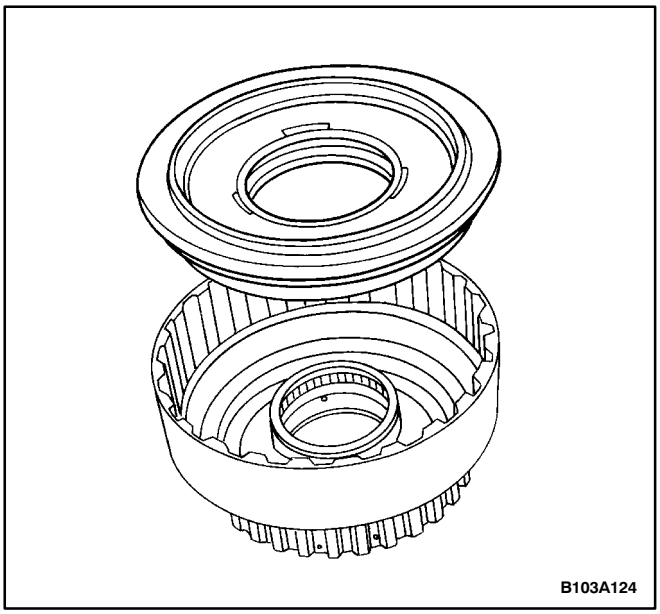

3. Install the accumulation piston into the clutch A cylinder.

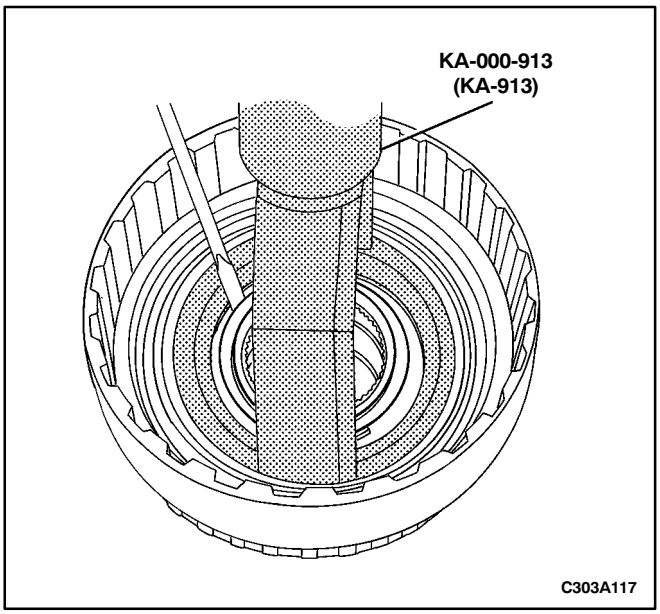

4. Compress the piston with the compression adapter KA-000-913 (KA-913) and install the snap ring.

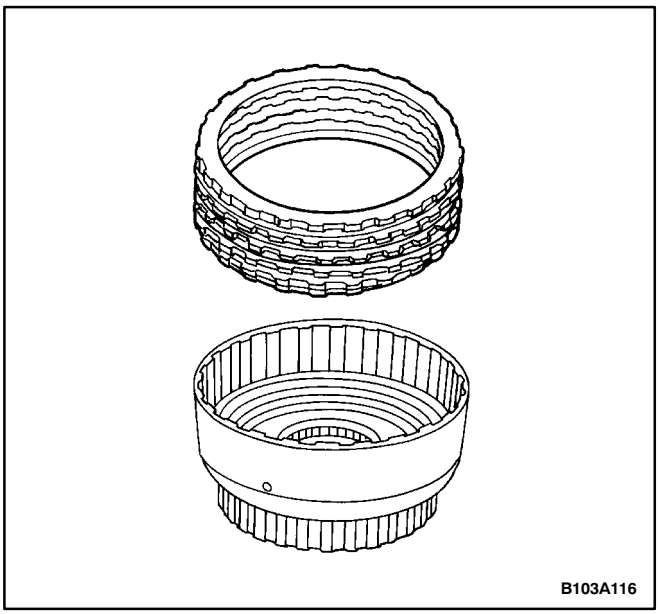

5. Install the clutch A assembly.

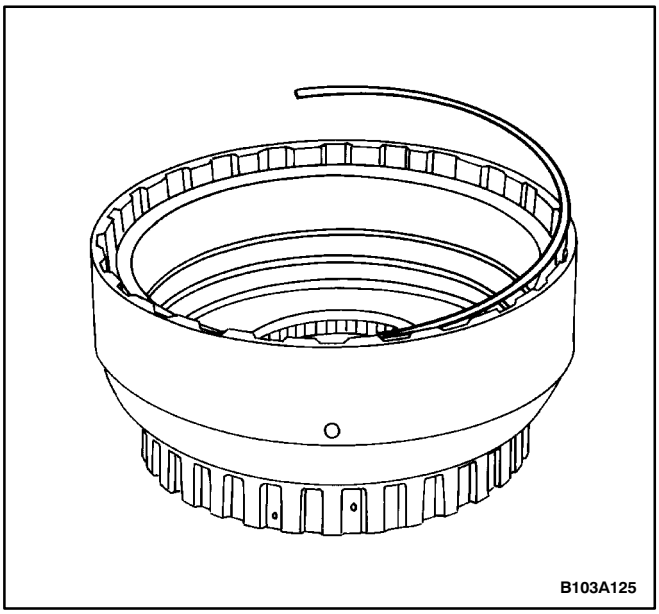

6. Install the clutch A assembly snap ring.

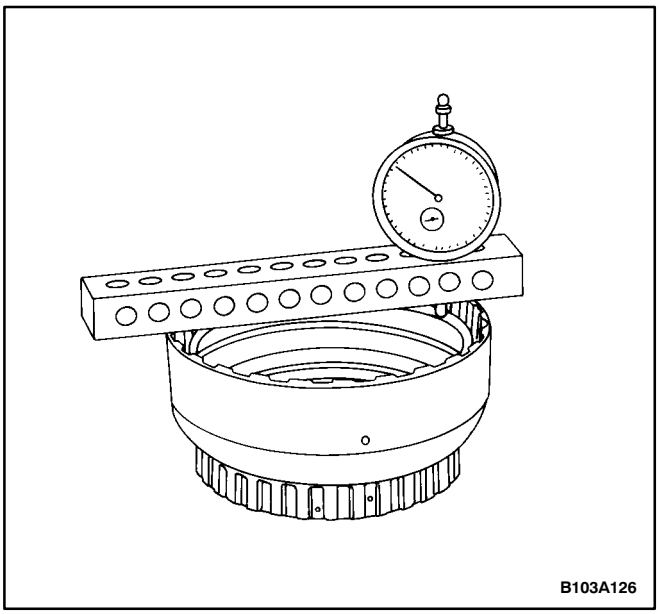

7. Check the clutch A assembly clearance by placing a measuring gauge on top of the clutch A cylinder.
8. Lift the clutch package upward to read the clutch clearance. The clearance should be 1.8-2.0 mm (0.7-0.8 inch).
9. If the measurement does not meet these specifications, replace the snap ring with one that is either thinner or thicker.

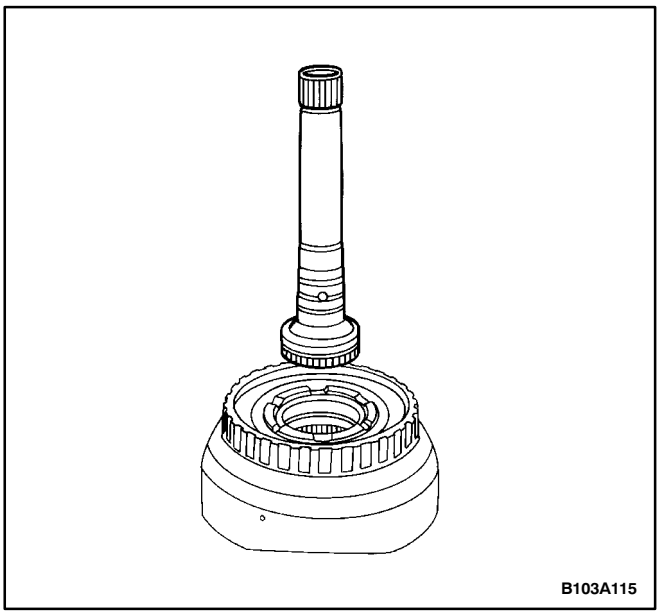

10. Install the turbine shaft.

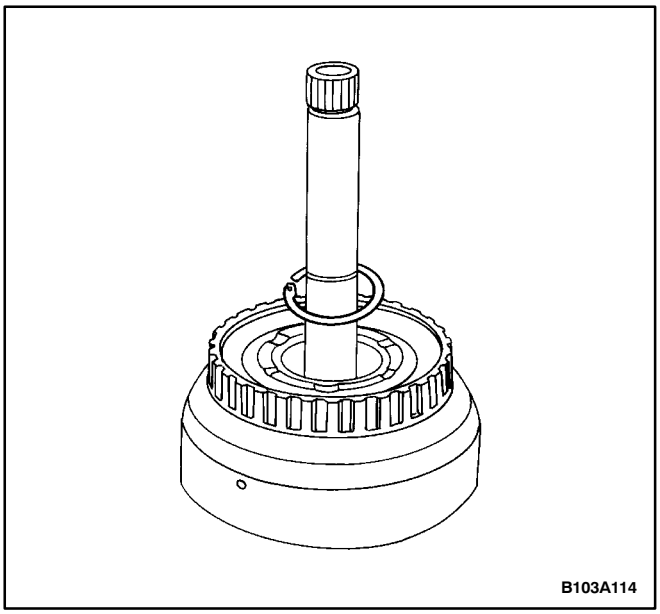

11. Install the clutch A snap ring.
12. Install the clutch A into the transaxle housing. Refer to “Major Component Assembly” in this section.
13. Install the transaxle into the vehicle. Refer to “Transaxle Assembly” in this section.

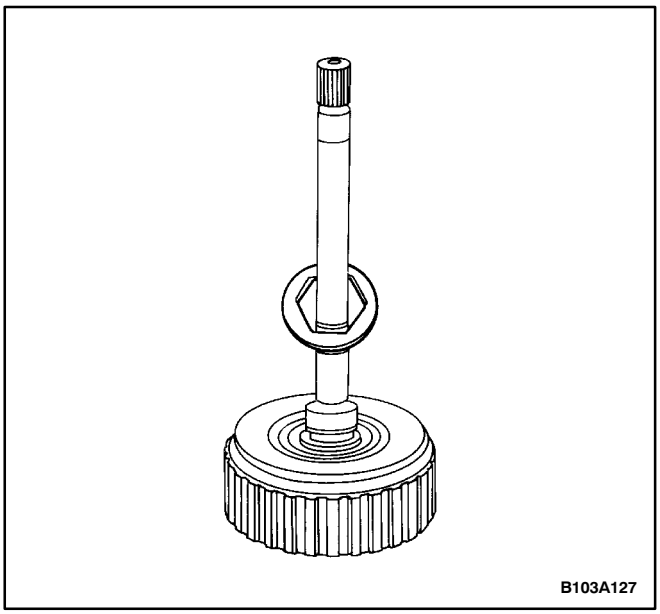

CLUTCH E

Tools Required

KA-001-715-04 Bearing Remover

Disassembly Procedure

1. Remove the transaxle from the vehicle. Refer to “Transaxle Assembly” in this section.
2. Remove the clutch E assembly from the transaxle housing. Refer to “Major Component Disassembly” in this section.
3. Remove the thrust washer from the motor shaft.

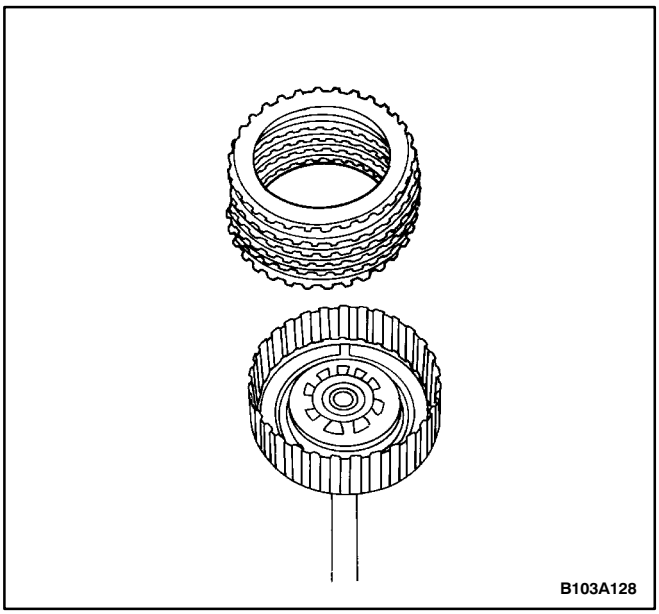

4. Remove the snap ring and the clutch E assembly.

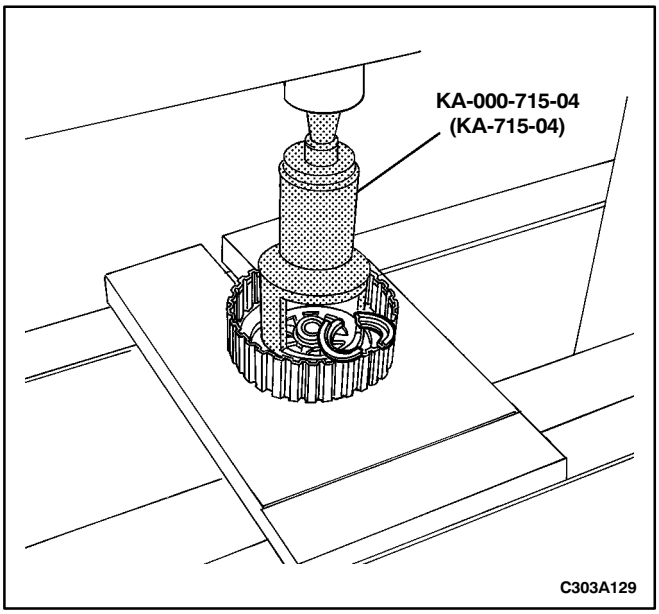

5. Compress the piston E using the bearing remover KA-001-715-04 (KA-715-04).
6. Remove the retainer rings and the plate spring.

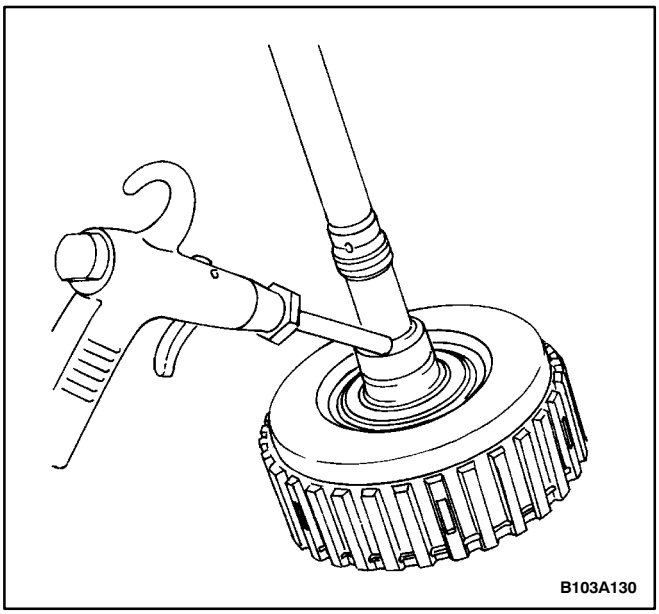

7. Insert compressed air into the fluid feed hole.

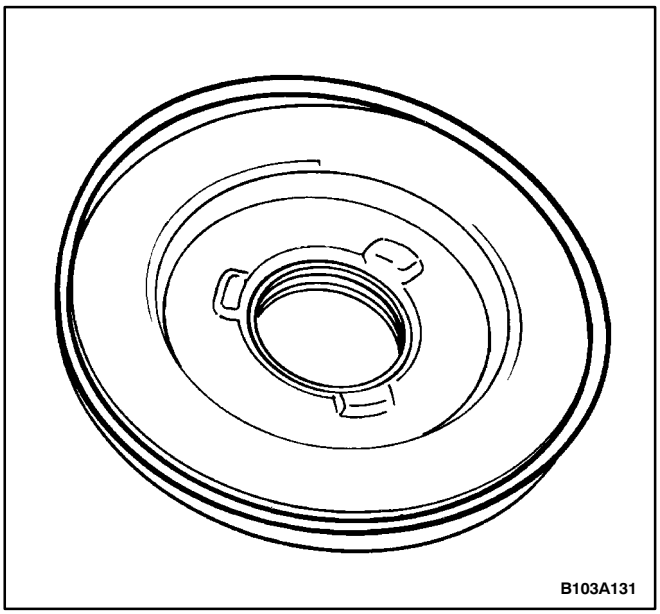

8. Remove the piston E.
9. Replace the O-ring as needed.

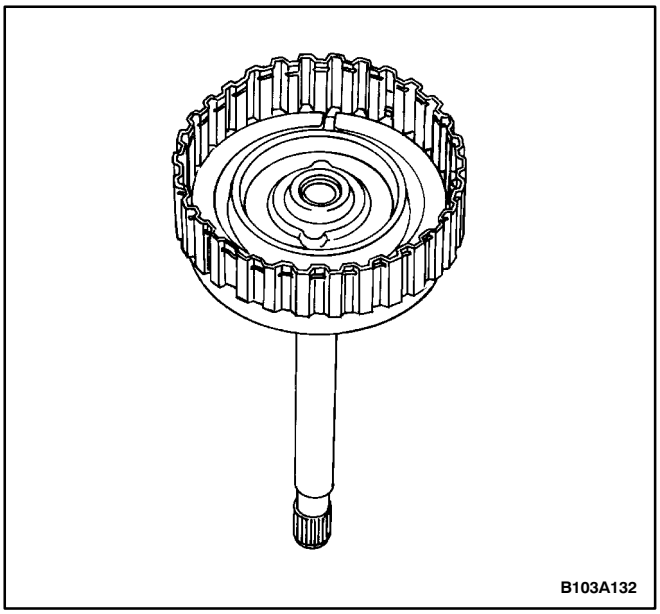

Assembly Procedure

1. Push the piston E into the cylinder of the motor shaft.

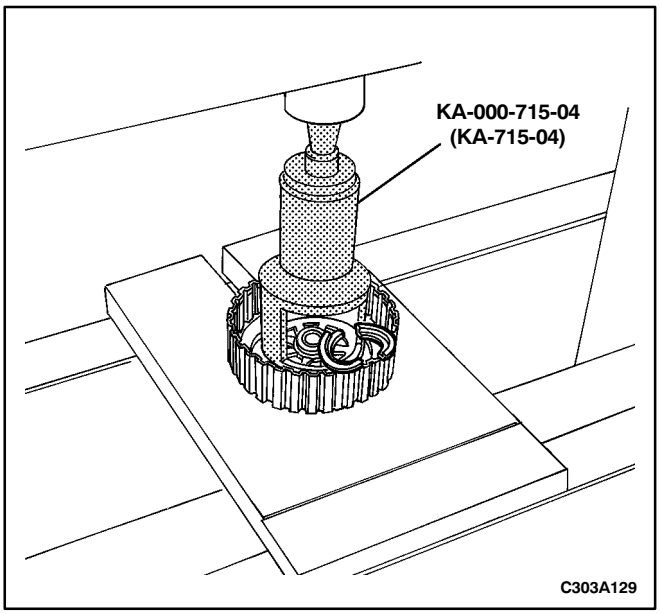

2. Compress the piston E using the bearing remover KA-001-715-04 (KA-715-04).
3. Install the retainer rings and the plate spring.

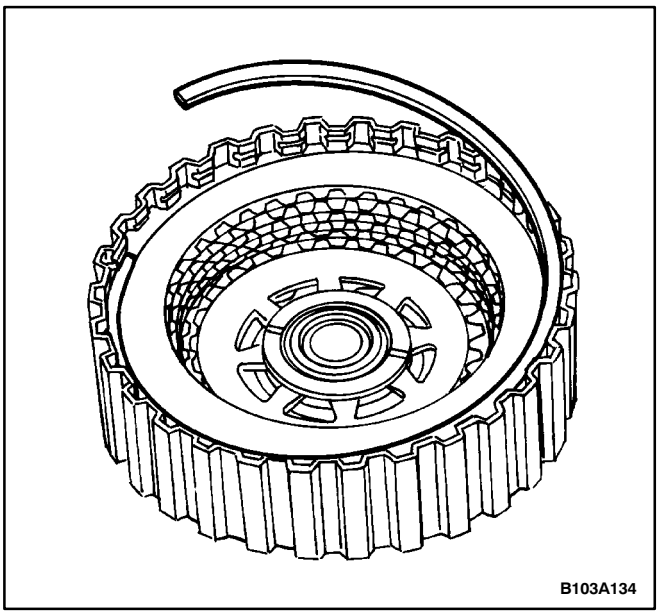

4. Install the clutch E assembly and the snap ring.

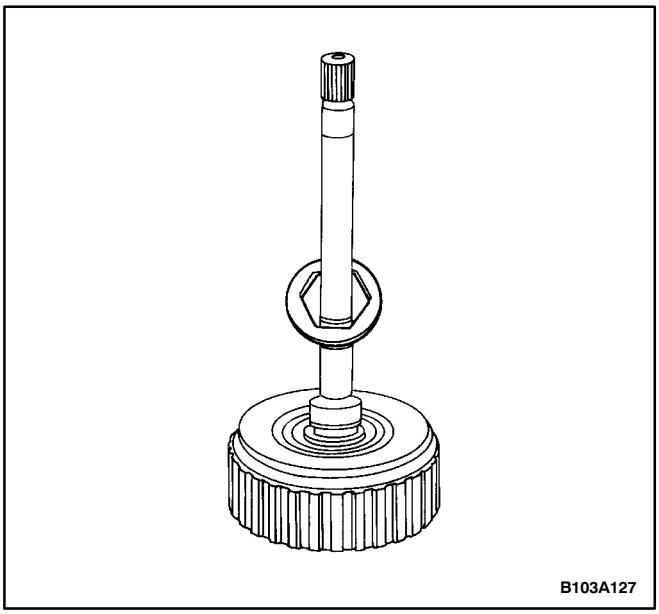

5. Install the thrust washer onto the motor shaft.
6. Install the clutch E assembly into the transaxle housing. Refer to “Major Component Assembly” in this section.
7. Install the transaxle into the vehicle. Refer to “Transaxle Assembly” in this section.

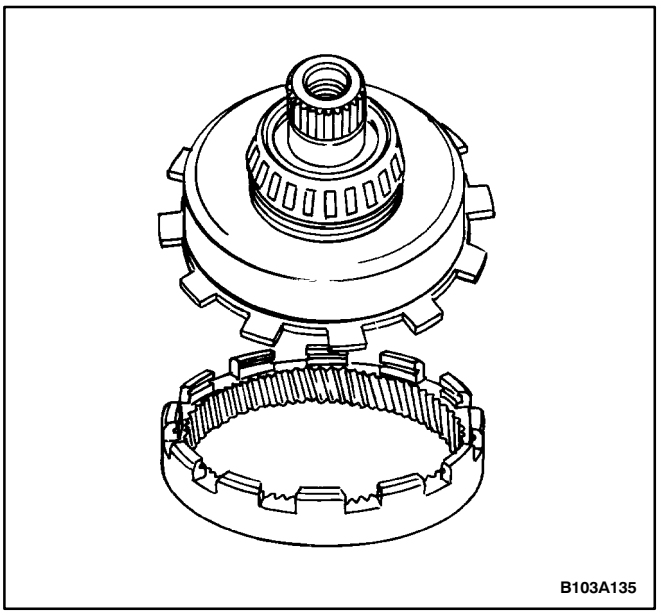

OUTPUT SHAFT AND FREEWHEEL FIRST GEAR

Tools Required

KA-001-060 (KA-060) Bearing Remover

KA-000-232 (KA-232) Bearing Remover

KA-000-300 (KA-300) Bearing Installer

Disassembly Procedure

1. Remove the transaxle from the vehicle. Refer to “Transaxle Assembly” in this section.
2. Remove the output shaft and the freewheel first gear from the transaxle housing. Refer to “Major Component Disassembly” in this section.
3. Remove the output shaft snap ring.
4. Separate the output shaft and the hollow gear.

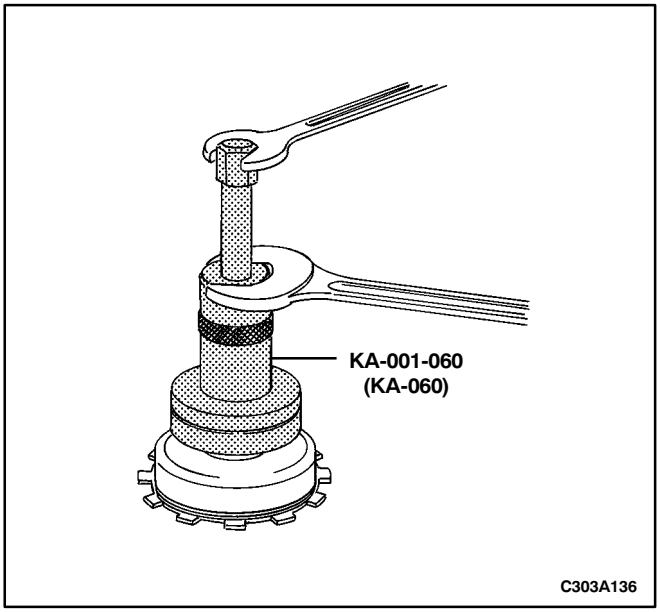

5. Remove the con bearing from the output shaft using the bearing remover KA-001-060.

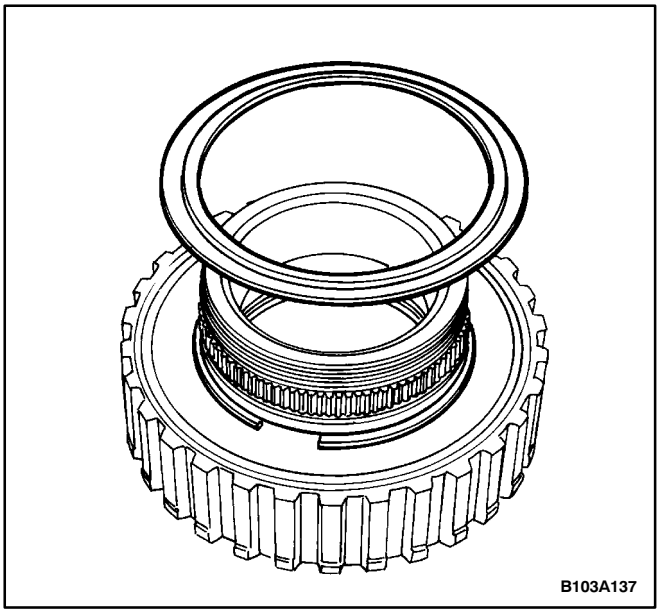

6. Remove the retainer ring and the snap ring.

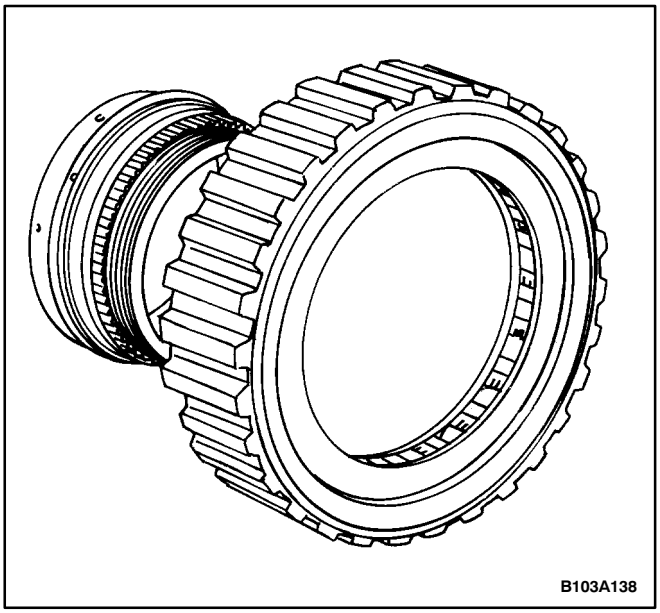

7. Remove the inner freewheel ring.

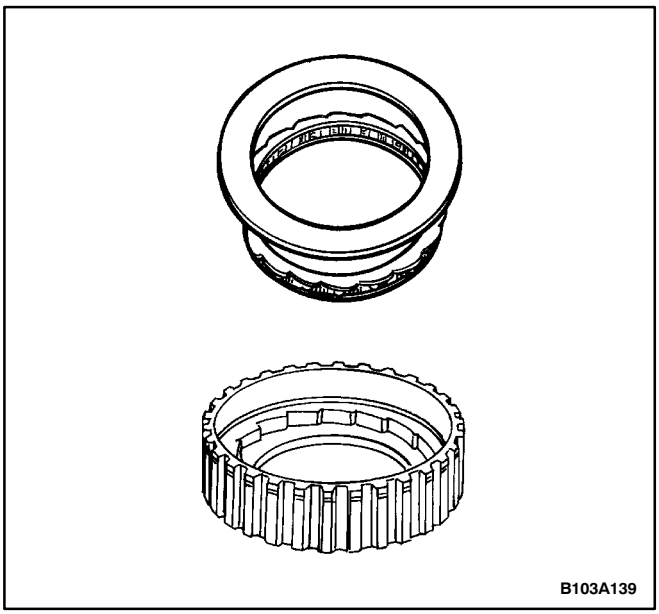

8. Remove the snap ring from the freewheel inner ring.
9. Separate the cover plate and the freewheel cage.

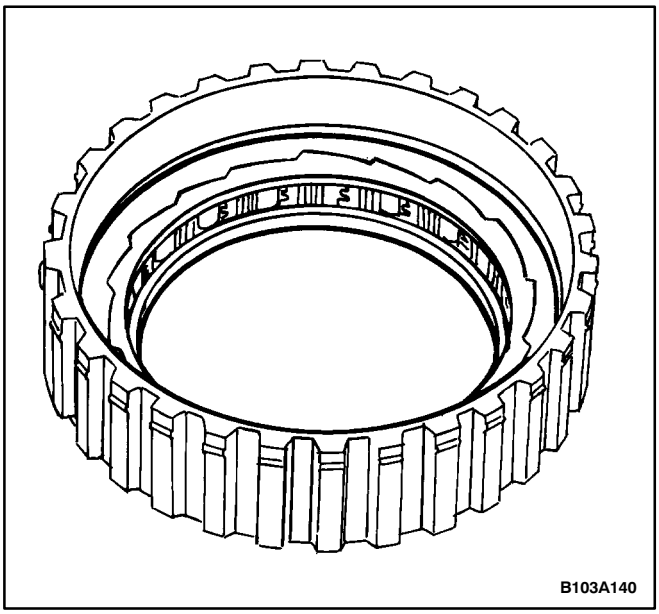

Assembly Procedure

1. Insert the freewheel cage carefully into the freewheel outer ring. For correct assembly, align the teeth of the cage with the openings of the outer ring.
2. Push the freewheel cage downward.

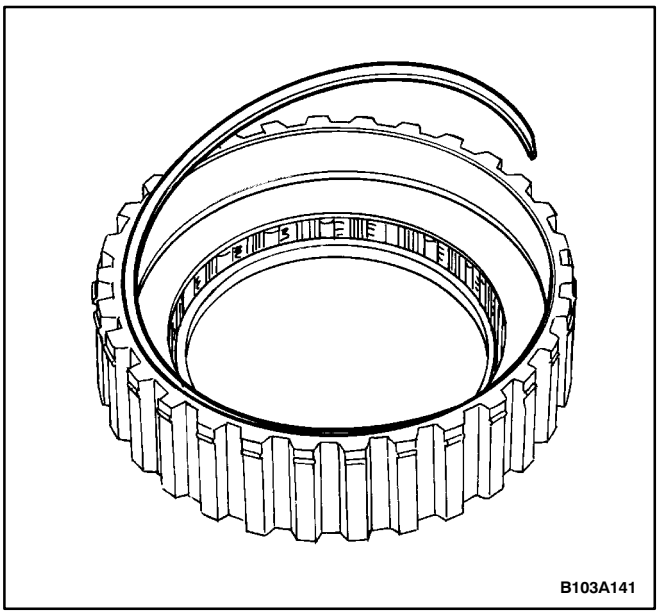

3. Install the freewheel inner ring snap ring.

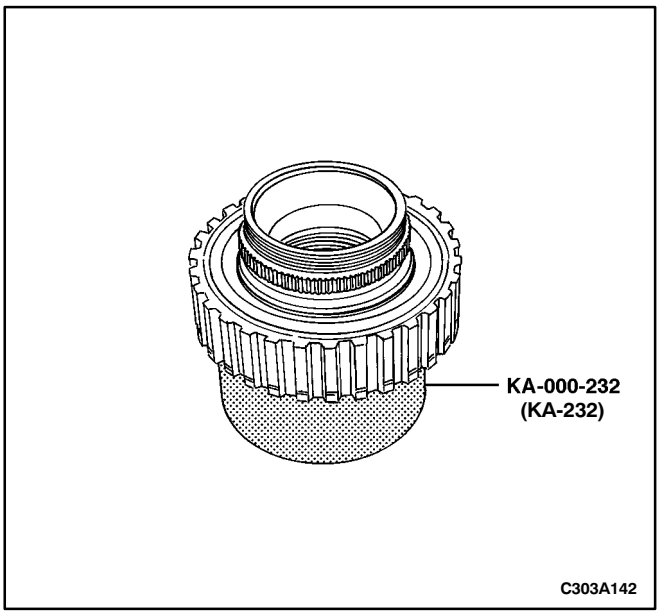

4. Install the bearing ring into the freewheel inner ring and push down to the STOP point.
5. Place the freewheel assembly on the bearing remover KA-000-232 (KA-232) and install the snap ring and the retainer ring.

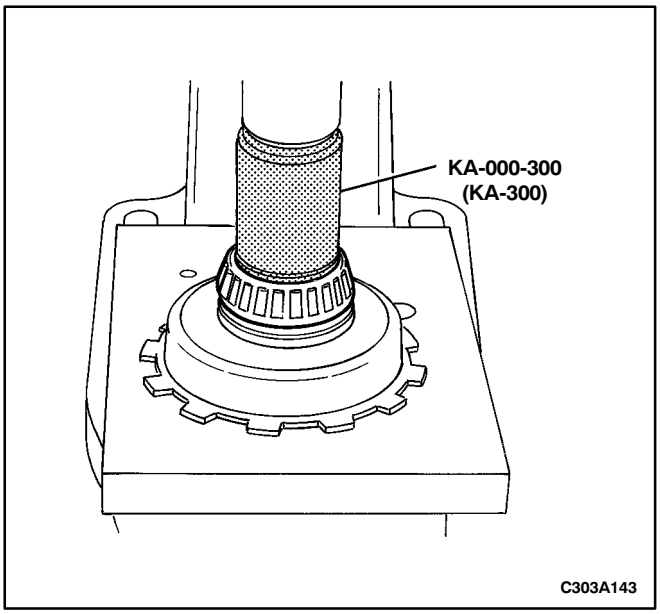

6. Install the con bearing onto the output shaft using the bearing installer KA-000-300 (KA-300).

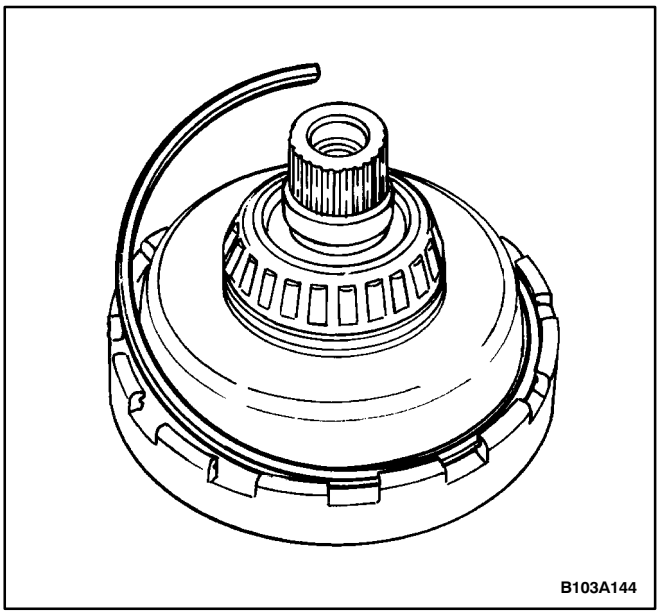

7. Join the output shaft and the hollow gear.
8. Install the output shaft snap ring.
9. Install the output shaft and the freewheel first gear into the transaxle housing. Refer to “Major Component Assembly” in this section.
10. Install the transaxle into the vehicle. Refer to “Transaxle Assembly” in this section.

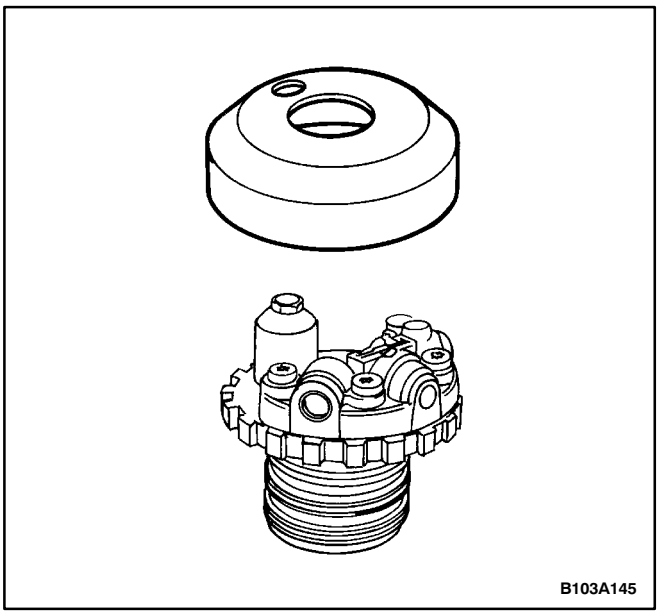

SIDE SHAFT AND GOVERNOR

Tools Required

KA-000-232 (KA-232) Bearing Remover

Disassembly Procedure

1. Remove the transaxle from the vehicle. Refer to “Transaxle Assembly” in this section.
2. Remove the side shaft and the governor assembly from the transaxle housing. Refer to “Major Component Disassembly” in this section.
3. Remove the governor screen sheet.

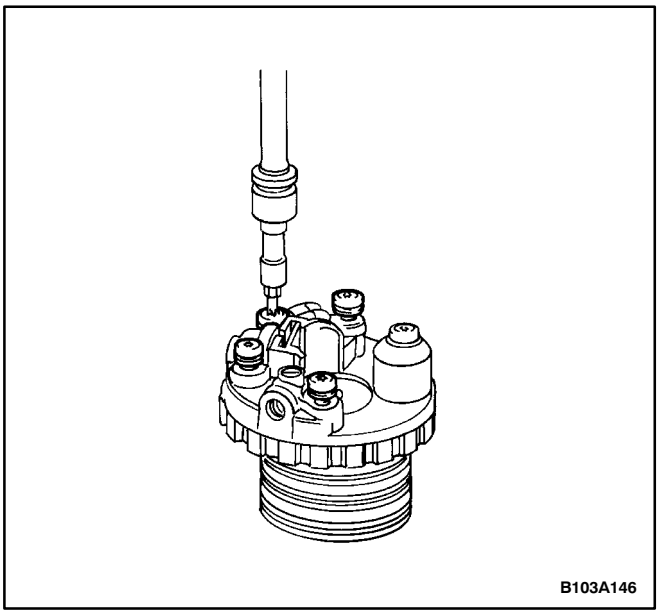

4. Remove the governor housing bolts and the governor housing.

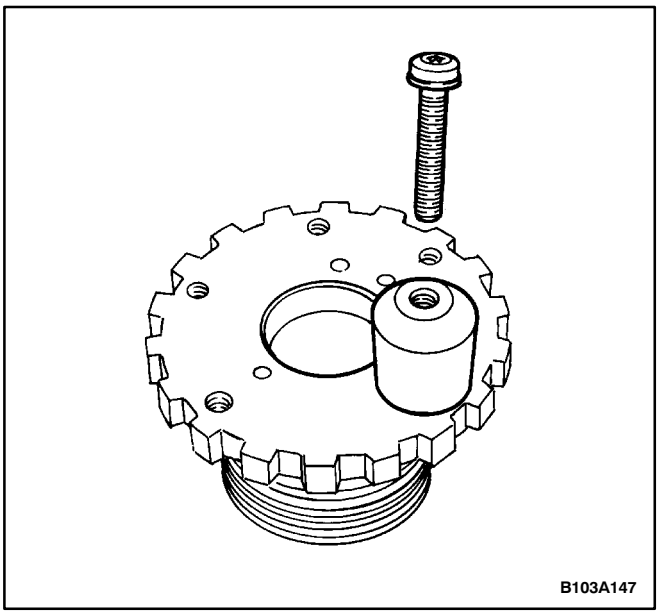

5. Remove the governor counterweight bolt and counterweight.

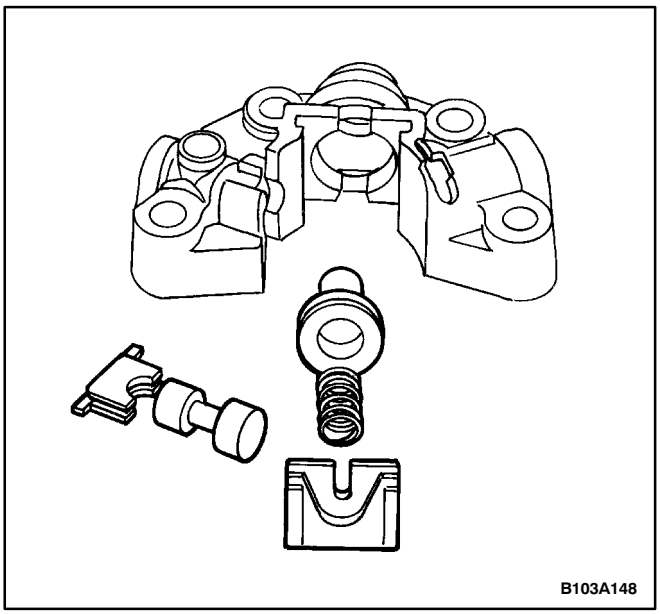

6. Remove the stage one push piston and the stage two spring and the piston.

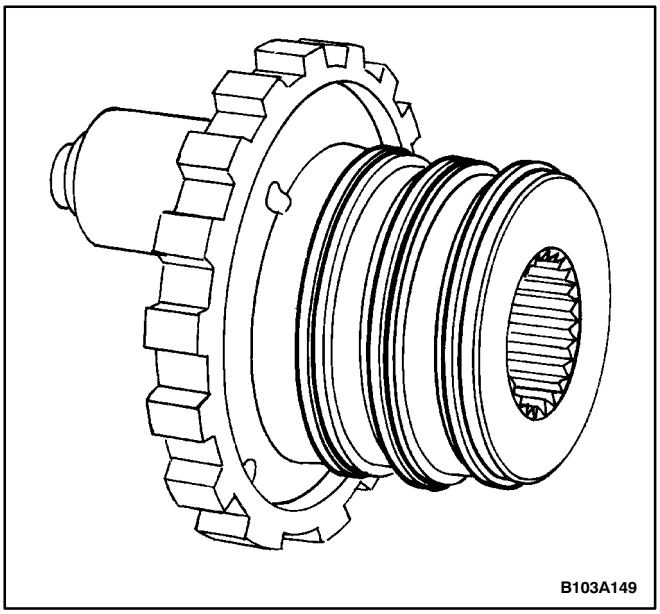

Notice: Inspect the governor housing for damage and replace it if it is damaged.

7. Replace the piston ring and the sealing rings on the governor flange as needed.

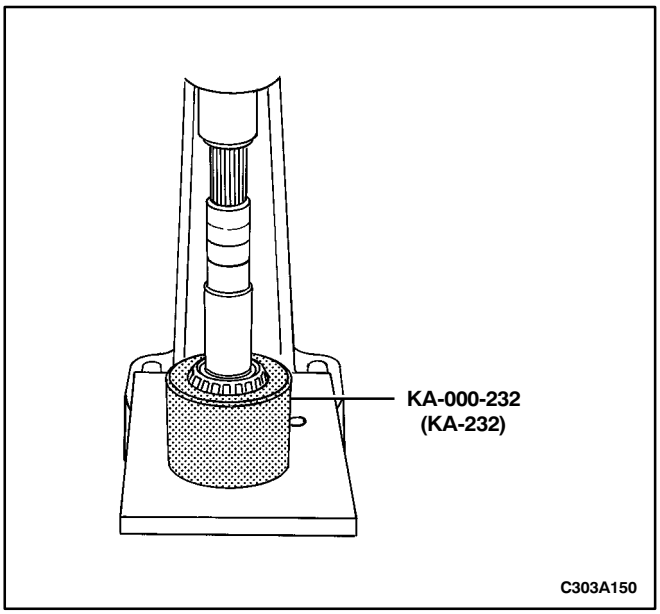

8. Remove the con bearing from the side shaft using the bearing remover KA-000-232 (KA-232).

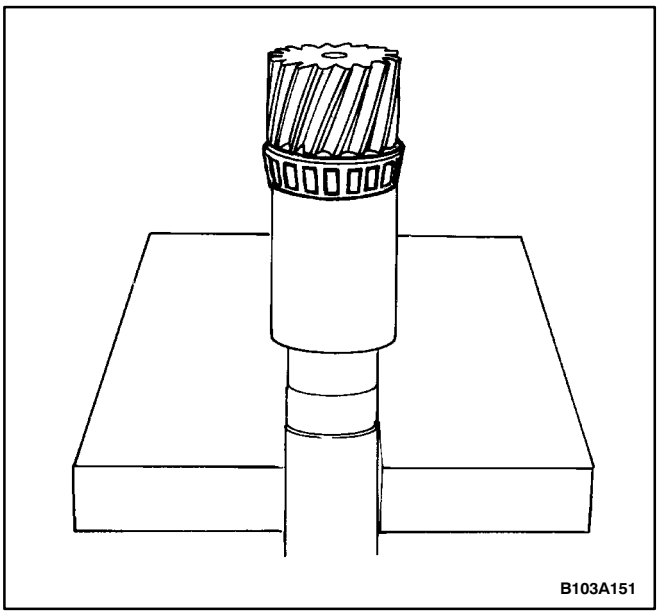

Assembly Procedure

1. Press the con bearing onto the side shaft using an arbor press and a 44.5 mm (1.75 inch) outside diameter steel tube with a wall thickness of 3.2 mm (0.13 inch) or a schedule 40 steel pipe, 32 mm (1.3 inch) nominal size.

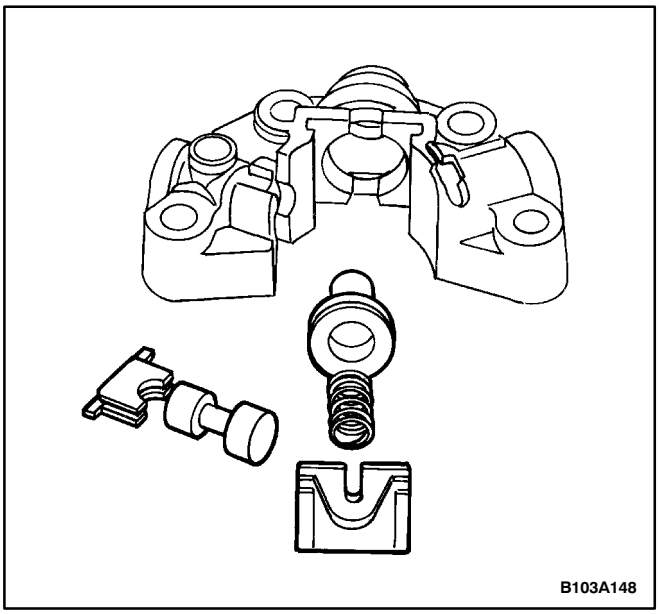

2. Install the stage two spring and the piston and the stage one push piston.

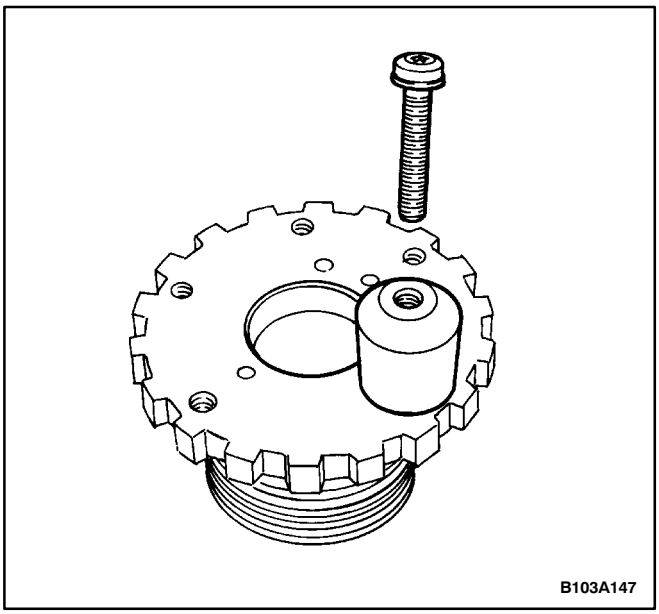

3. Install the governor counterweight and the counterweight bolt.

Tighten

Tighten the counterweight bolt to 10 N•m (89 lb-in).

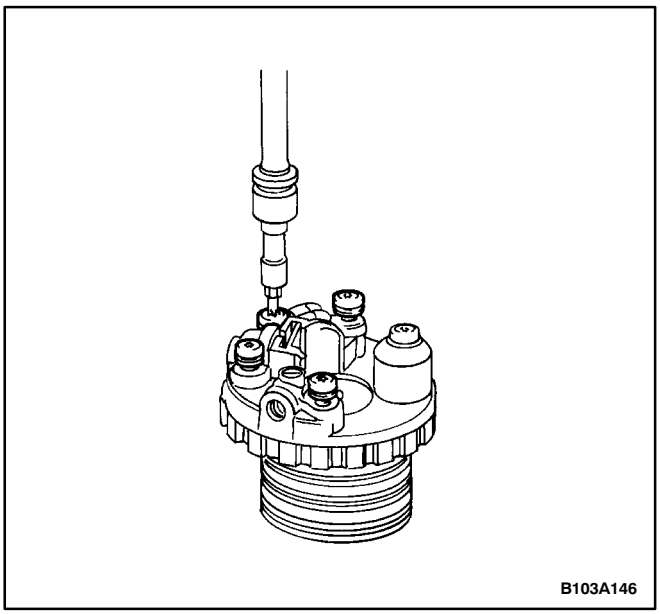

4. Install the governor housing and the governor housing bolts.

Tighten

Tighten the governor housing bolts to 10 N•m (89 lb-in).

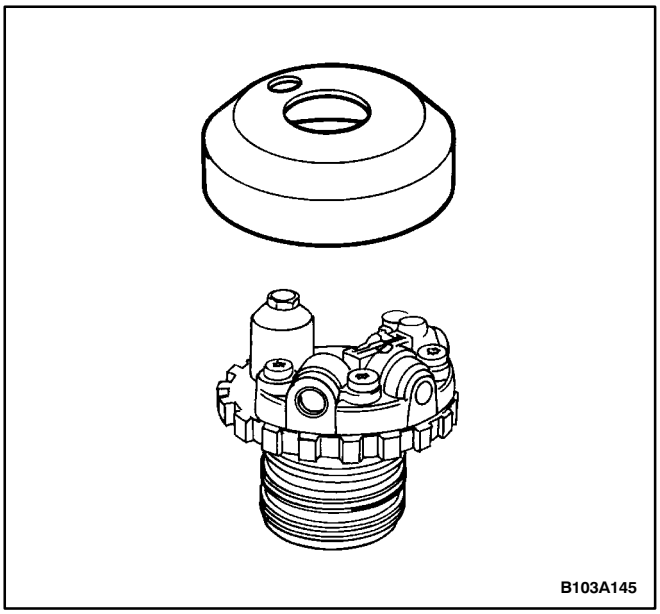

5. Install the governor screen sheet.
6. Install the side shaft and the governor assembly from the transaxle housing. Refer to “Major Component Assembly” in this section.
7. Install the transaxle into the vehicle. Refer to “Transaxle Assembly” in this section.

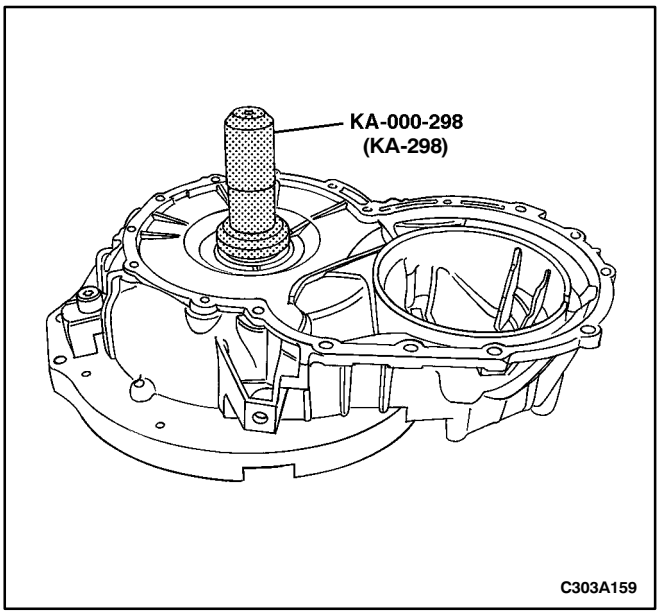

HOUSING

Tools Required

KA-002-111 (KA-111) Bearing Race Installer

KA-000-298 (KA-298) Bearing Ring Remover/Installer

Disassembly Procedure

1. Remove the transaxle from the vehicle. Refer to “Transaxle Assembly” in this section.
2. Remove the bell housing from the transaxle. Refer to “Major Component Disassembly” in this section.
3. Remove the seal ring from the bell housing using the bearing ring remover/installer KA-000-298.

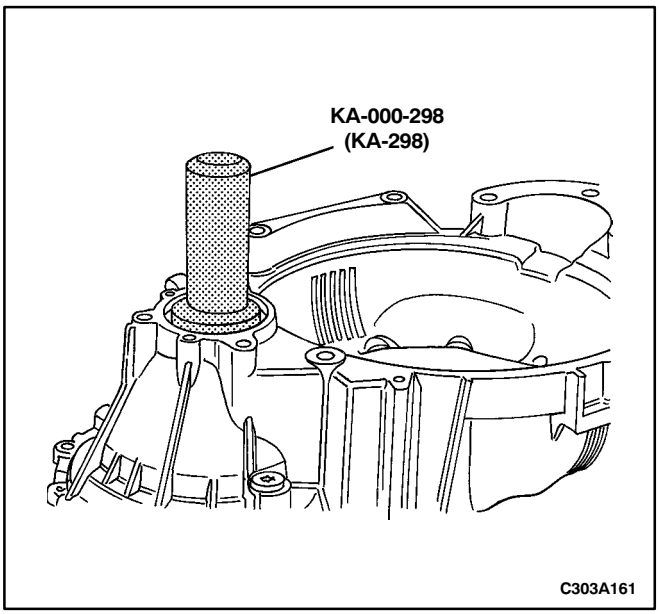

4. Remove the extension housing. Refer to “Case Extension Housing” in this section.
5. Remove the outer ring of the con bearing in the differential area of the housing using the bearing ring remover/installer KA-000-298 (KA-298).

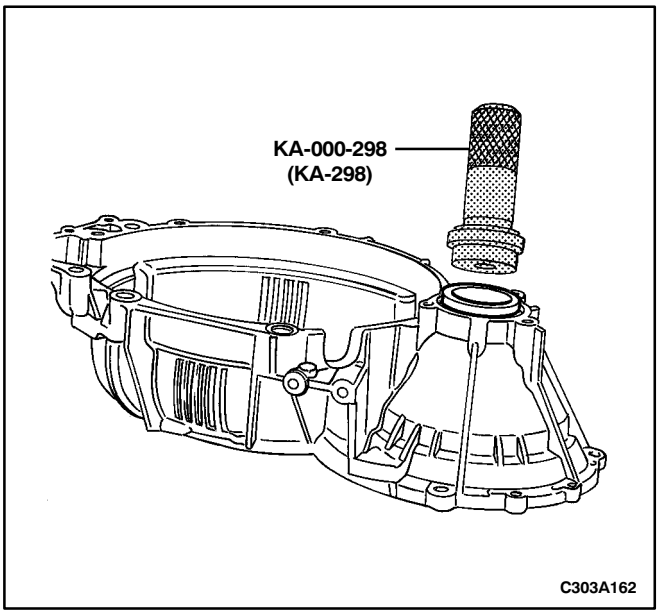

Assembly Procedure

1. Install the outer ring of the con bearing in the differential area of the housing using the bearing ring remover/installer KA-000-298 (KA-298).

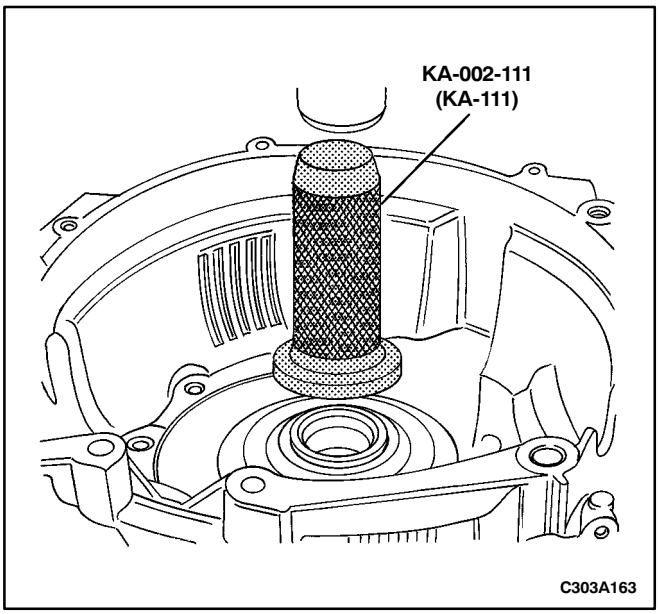

2. Install the extension housing. Refer to “Case Extension Housing” in this section.
3. Install the outer ring of the con bearing using the bearing race installer KA-002-111 (KA-111).
4. Install the bell housing into the transaxle. Refer to “Major Component Assembly” in this section.
5. Install the transaxle into the vehicle. Refer to “Transaxle Assembly” in this section.

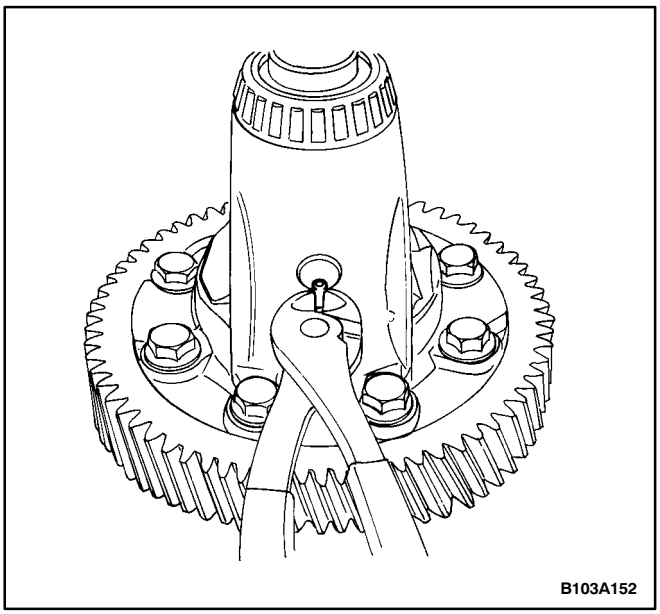

DIFFERENTIAL

Tools Required

KA-001-060 (KA-060) Bearing Remover

KA-000-299 (KA-299) Seal Ring Installer

KA-000-300 (KA-300) Bearing Installer

Disassembly Procedure

1. Remove the transaxle from the vehicle. Refer to “Transaxle Assembly” in this section.
2. Remove the differential from the transaxle. Refer to “Major Component Disassembly” in this section.
3. Remove a roll pin from one side of the differential.

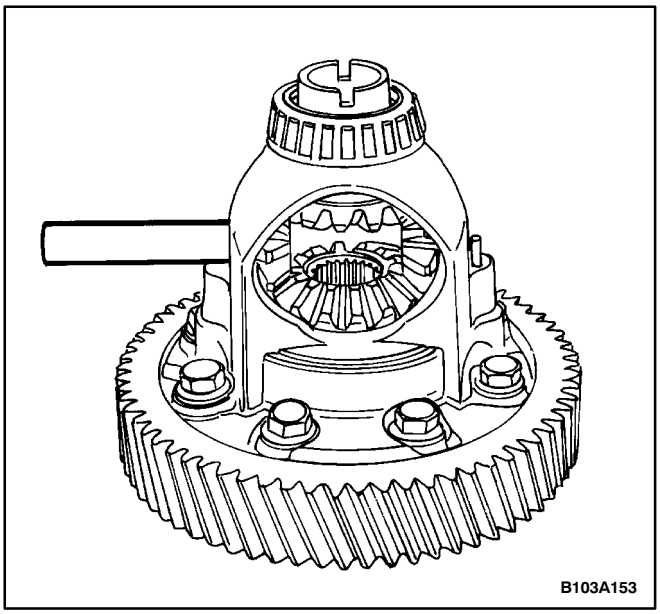

4. Remove the differential push pin.

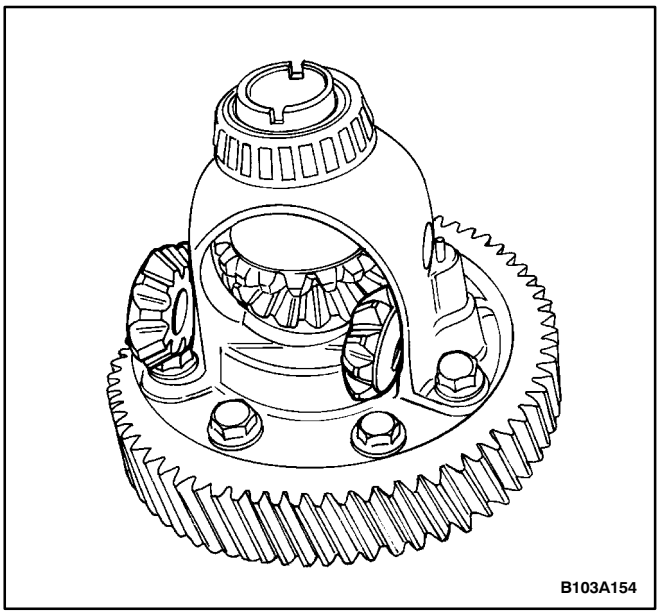

5. Remove the bevel side gears.

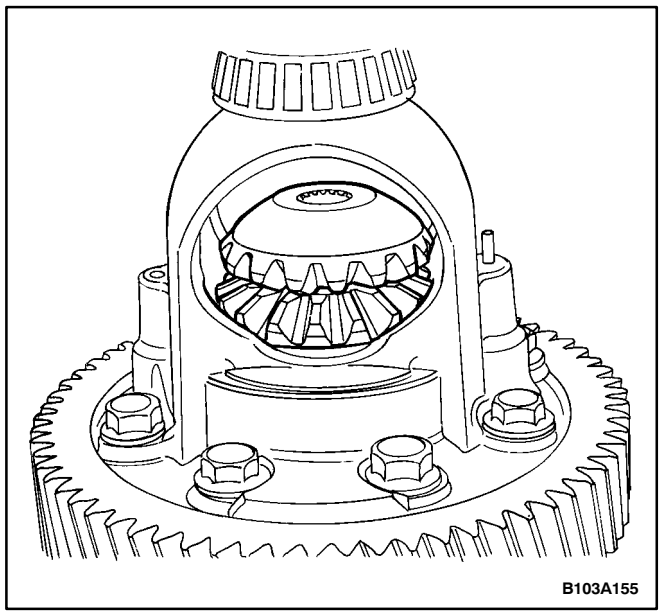

6. Remove the bevel upper gear and the bevel lower gear.

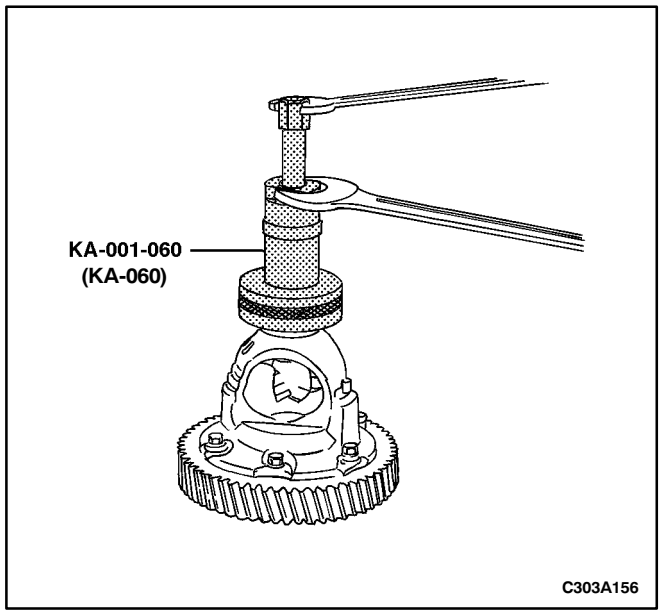

7. Remove the upper tapered roller bearing using the bearing remover KA-001-060 (KA-060).

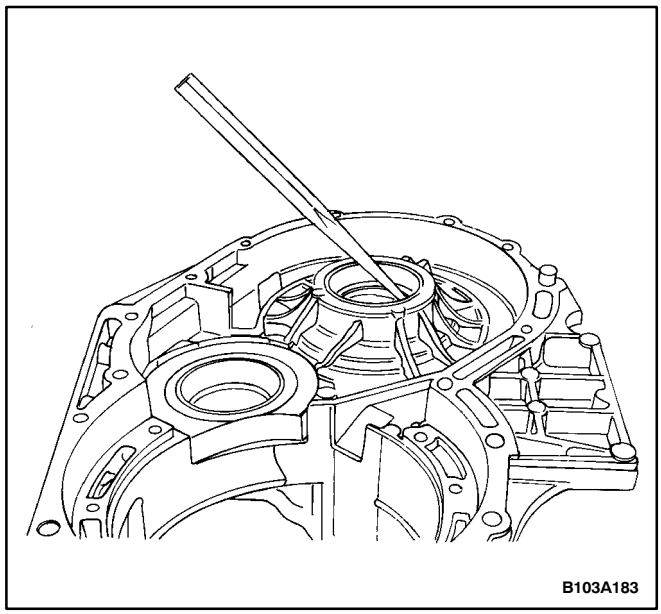

8. Remove the housing seal ring in the differential area.

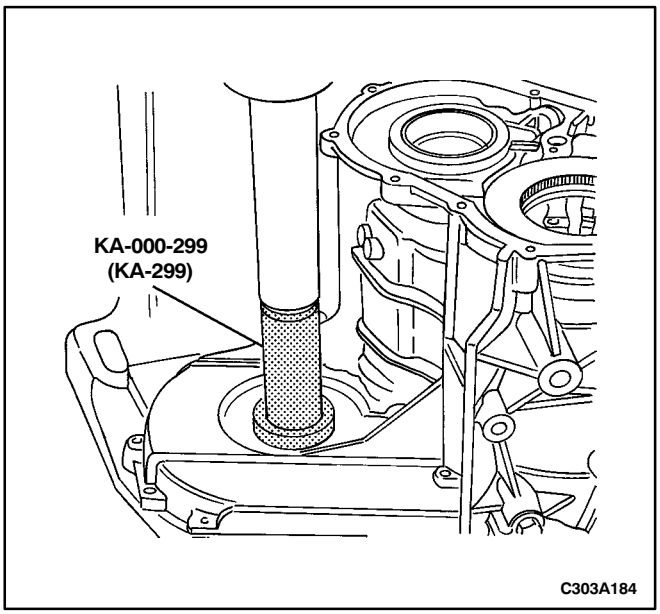

Assembly Procedure

1. Install the housing seal ring in the differential area using the seal ring installer KA-000-299 (KA-299).

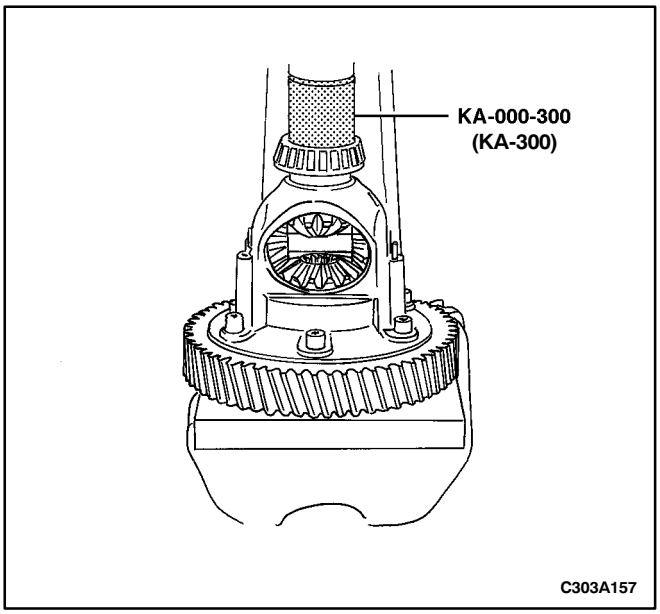

2. Install the upper tapered roller bearing using the bearing installer KA-000-300 (KA-300).

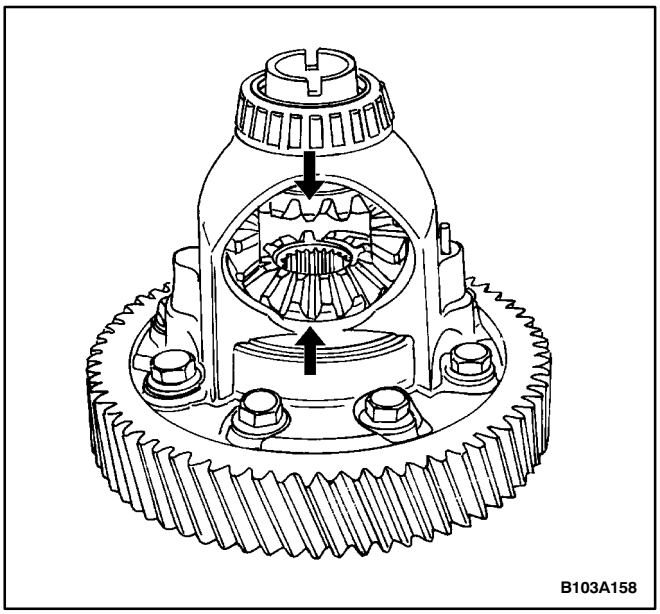

3. Install the upper, the lower, and the side bevel gears. The teeth of the upper gear must align with the spaces in the lower gear in order to install the side, the upper, and the lower bevel gears properly.

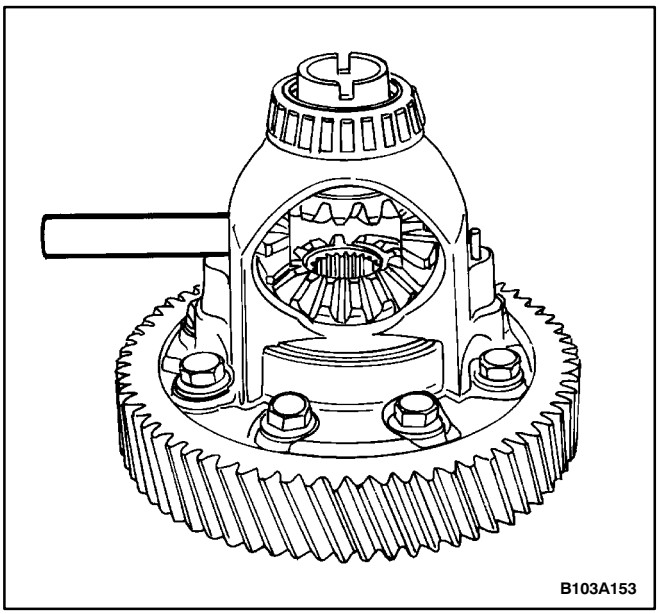

4. Install the differential push pin.

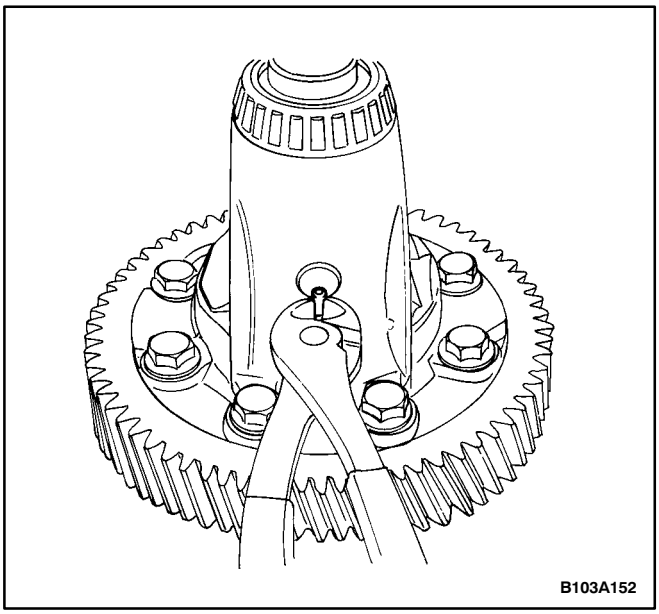

5. Install the roll pin.
6. Install the differential into the transaxle. Refer to “Major Component Assembly” in this section.
7. Install the transaxle into the vehicle. Refer to “Transaxle Assembly” in this section.

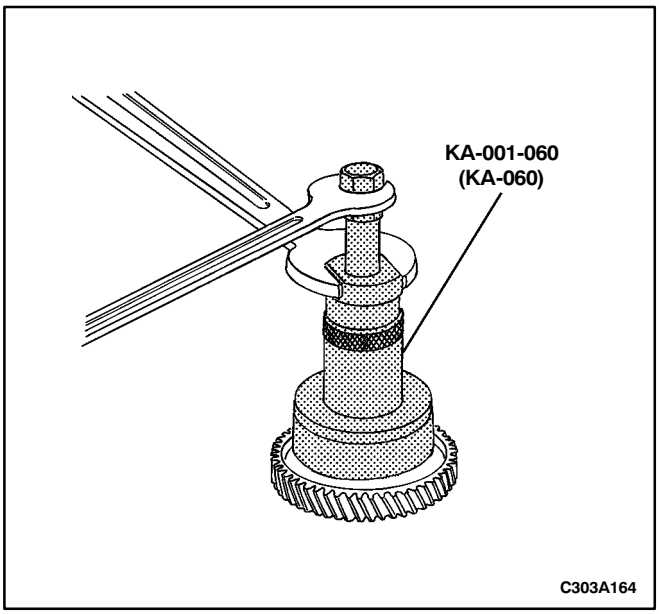

SMALL SPUR GEAR

Tools Required

KA-001-060 (KA-060) Bearing Remover

KA-000-300 (KA-300) Bearing Installer

Disassembly Procedure

1. Remove the transaxle from the vehicle. Refer to “Transaxle Assembly” in this section.
2. Remove the small spur gear from the transaxle. Refer to “Major Component Disassembly” in this section.
3. Remove the con bearing from the small spur gear using the bearing remover KA-001-060 (KA-060).

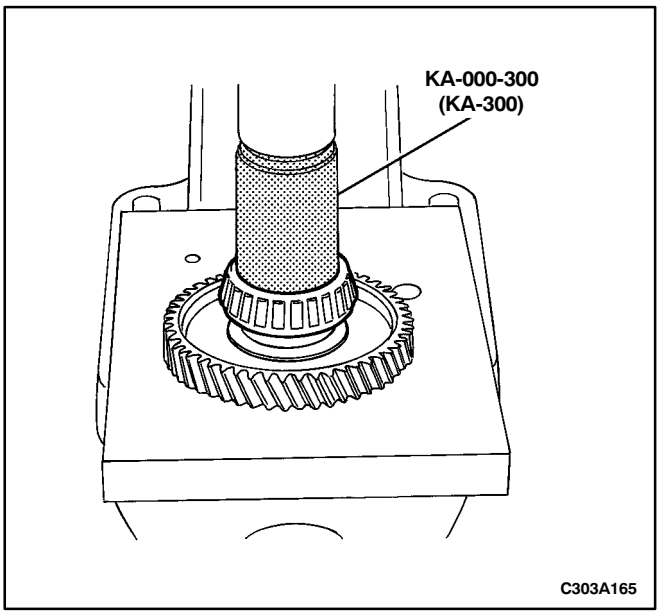

Assembly Procedure

1. Install the con bearing onto the small spur gear using the bearing installer KA-000-300 (KA-300).
2. Install the small spur gear into the transaxle. Refer to “Major Component Assembly” in this section.
3. Install the transaxle into the vehicle. Refer to “Transaxle Assembly” in this section.

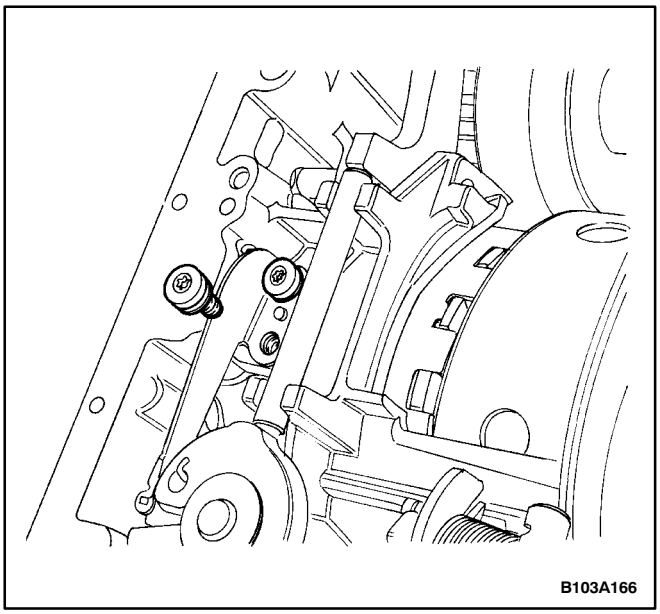

PARK SYSTEM COMPONENTS

Tools Required

KA-000-187 (KA-187) Seal Ring Punch

KA-000-287 (KA-287) Securing Device

Disassembly Procedure

1. Remove the transaxle from the vehicle. Refer to “Transaxle Assembly” in this section.
2. Remove the fluid pan cover and the gasket. Refer to “Pan and Gasket” in this section.
3. Remove the valve body. Refer to “Valve Body” in this section.
4. Remove the side cover and the gasket. Refer to “Case Side Cover Pan and Gasket” in this section.
5. Remove the detent screws that secure the spring plate.

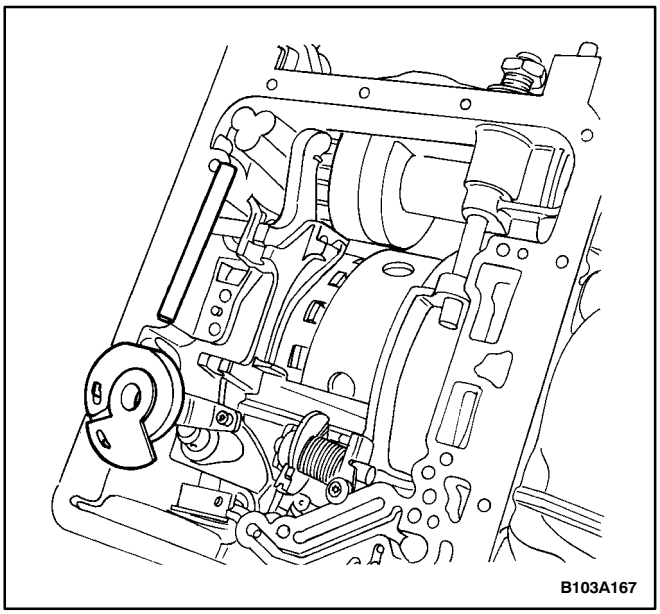

6. Remove the connecting rod and the PARK cam.

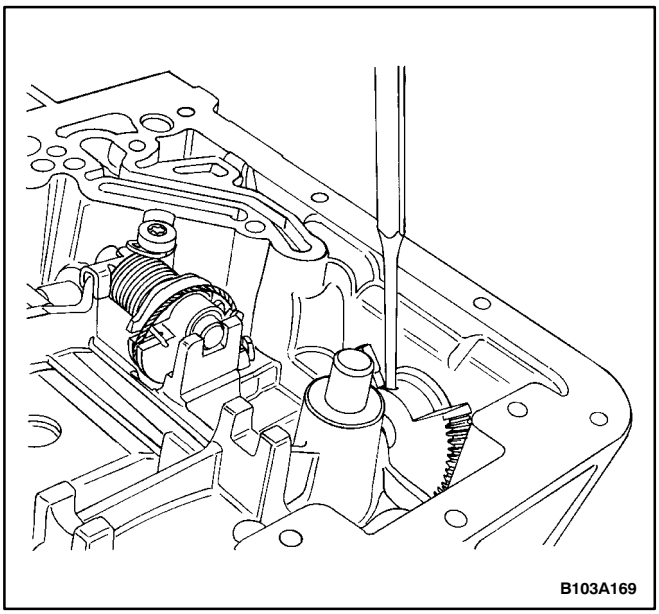

7. Remove the selector shaft roll pin.

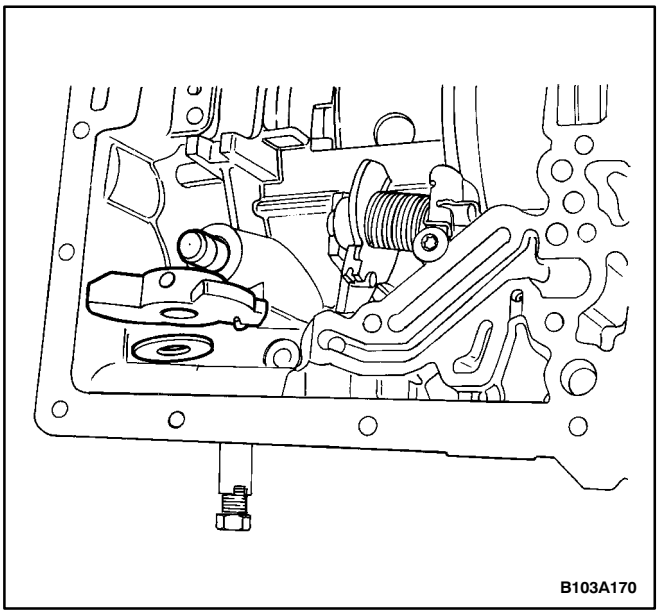

8. Remove the selector shaft, the selector shaft cam, the adjustment washer, and the cam pin.

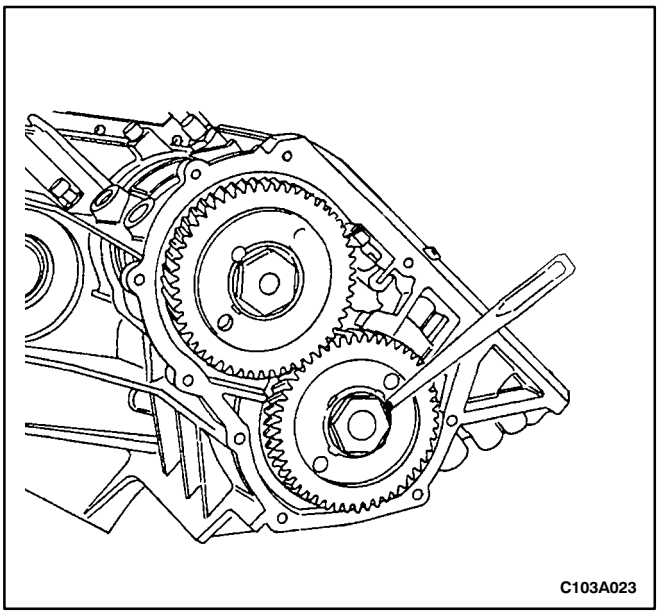

9. Bend the locking tabs on the small spur gear securing nut.

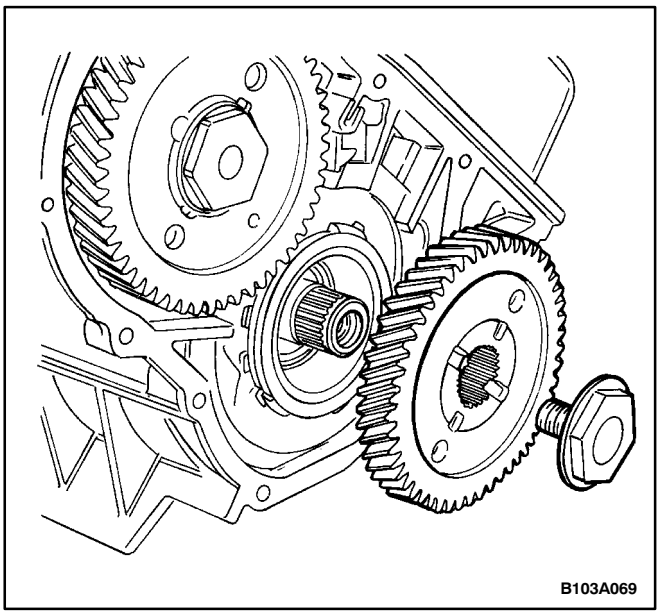

10. Remove the securing bolt on the smaller spur gear and remove the small spur gear.

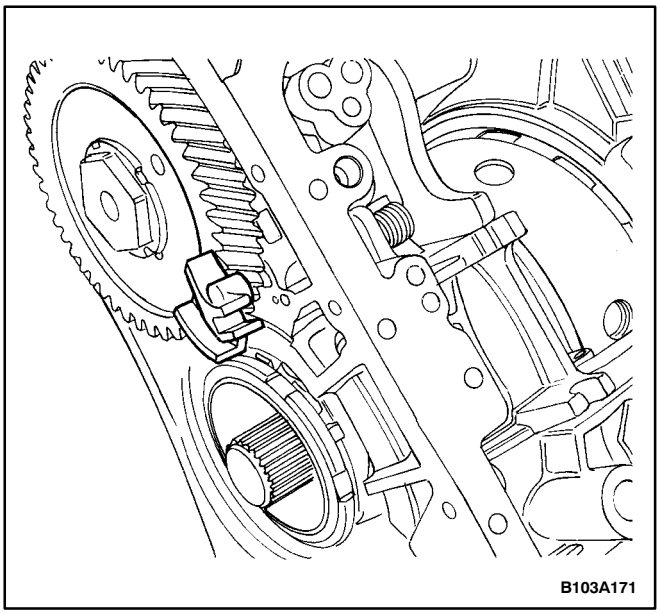

11. Remove the plastic holding fixture.

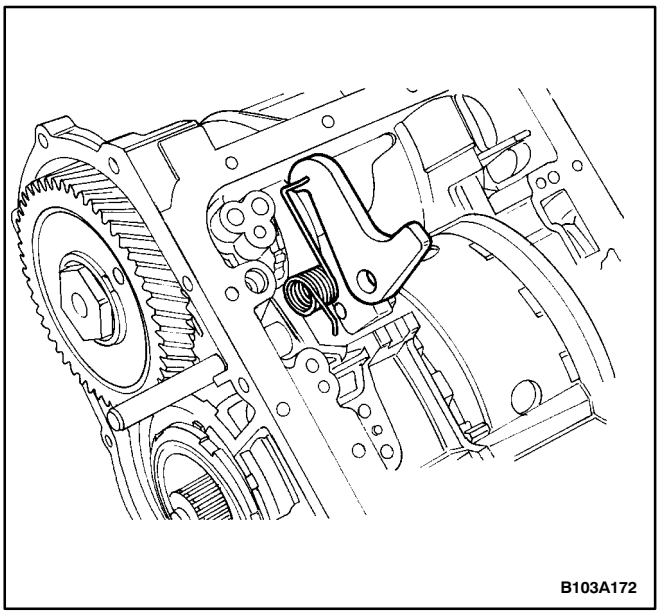

12. Push the PARK pawl pin out of the housing and remove the BRAKE pawl along with the leg spring.

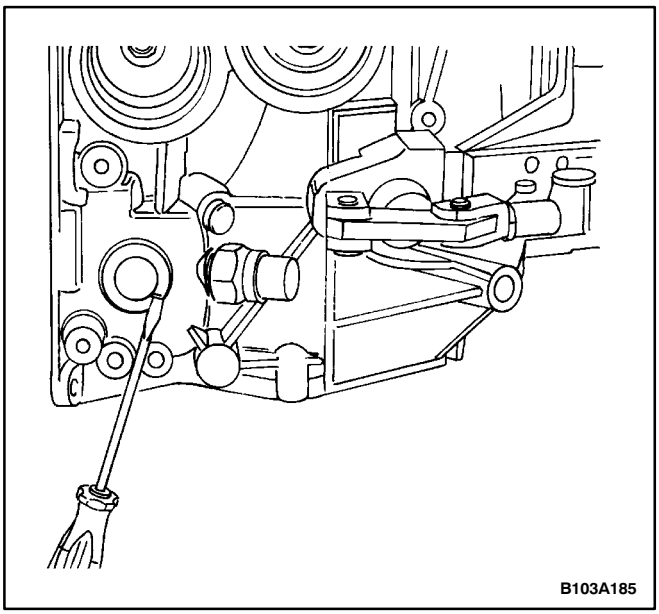

13. Remove the selector shaft seal ring.

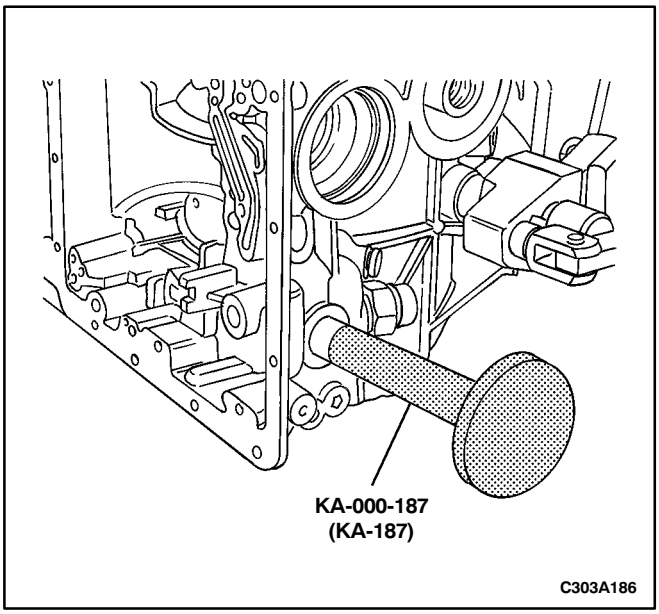

Assembly Procedure

1. Install the selector shaft seal ring using the seal ring punch KA-000-187 (KA-187).

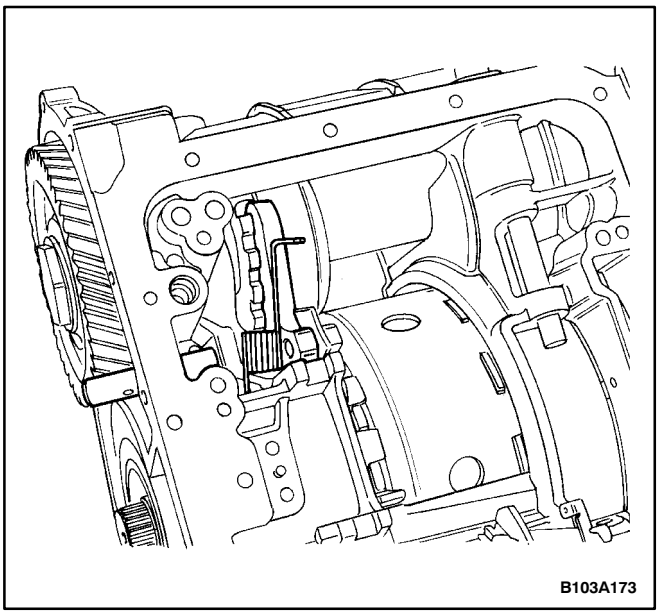

2. Insert the PARK pawl pin approximately half of the way into the transmission case in order to install the leg spring and the PARK pawl.

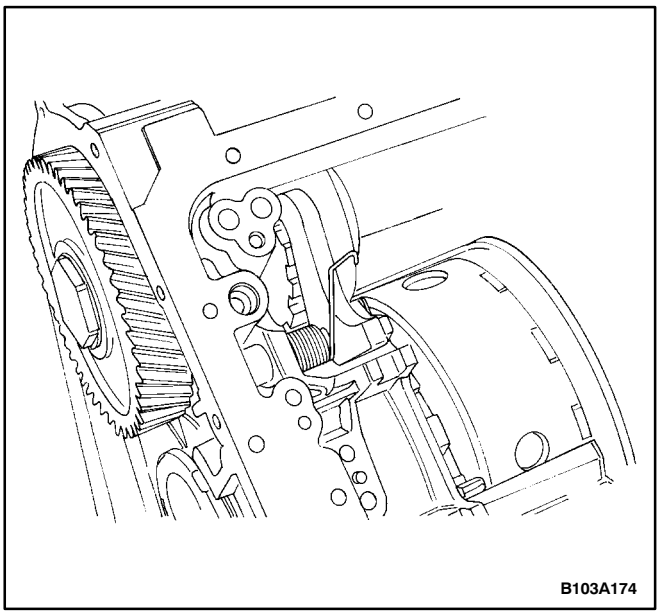

3. Push the shaft to the STOP point and place the leg spring under the PARK pawl.

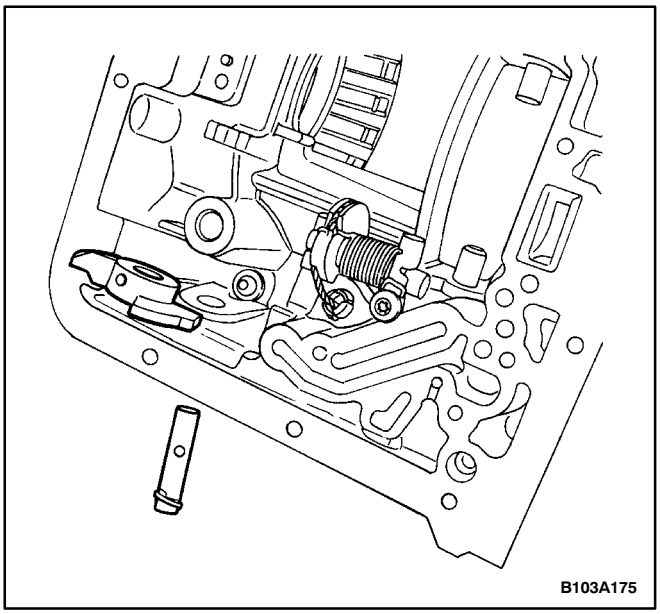

4. Insert the selector shaft half of the way into the transmission case, fit the selector shaft cam onto the shaft, and push the selector shaft to the STOP point.

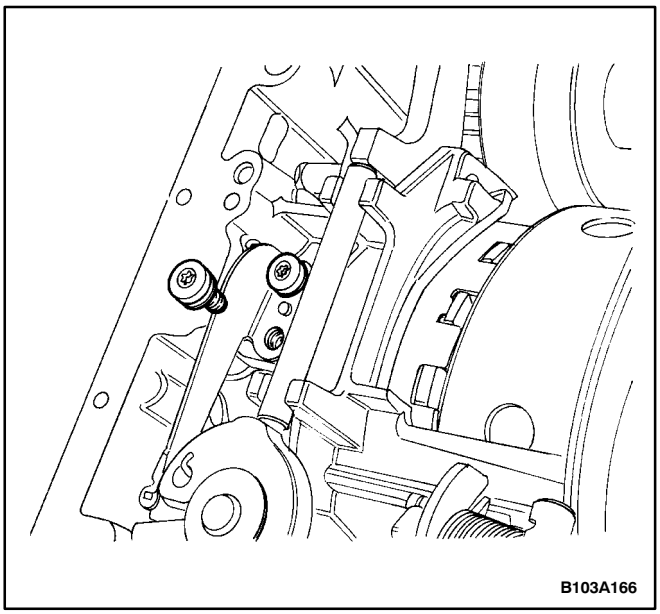

5. Install the spring plate into the housing and secure the spring plate with the detent screws.

Tighten

Tighten the spring plate detent screws to 10 N•m (89 lb-in).

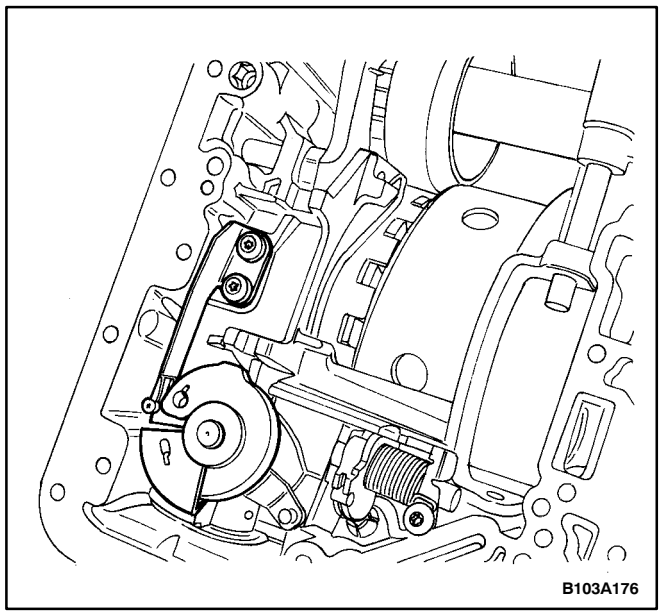

6. Install the PARK cam onto the cam pin and connect the spring plate.

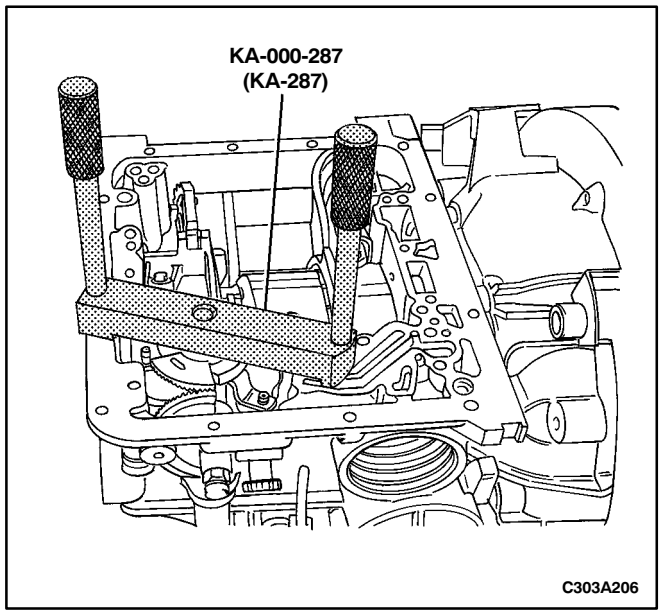

7. Push the selector shaft cam up against the PARK cam as tightly as possible. Secure the PARK cam with the securing device KA-000-287 (KA-287).

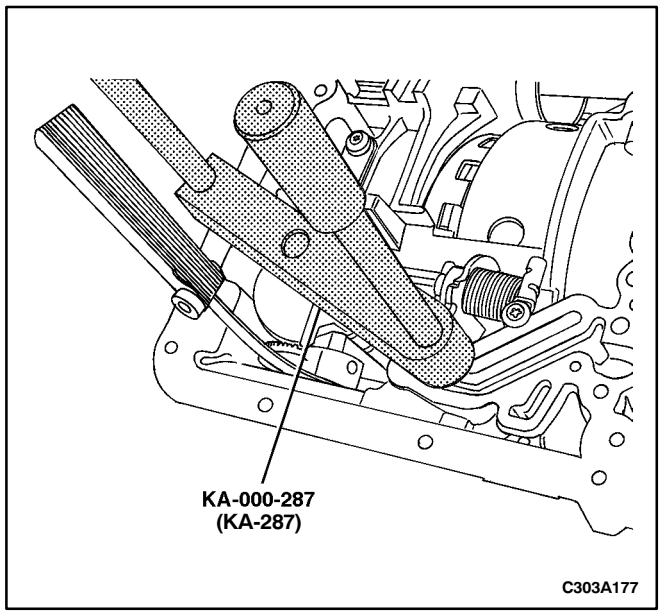

8. Measure the clearance between the selector shaft cam and the transaxle case with a gauge. Determine the size washer to fit into this clearance by subtracting 0.10 mm (0.39 inch) from the clearance measurement.

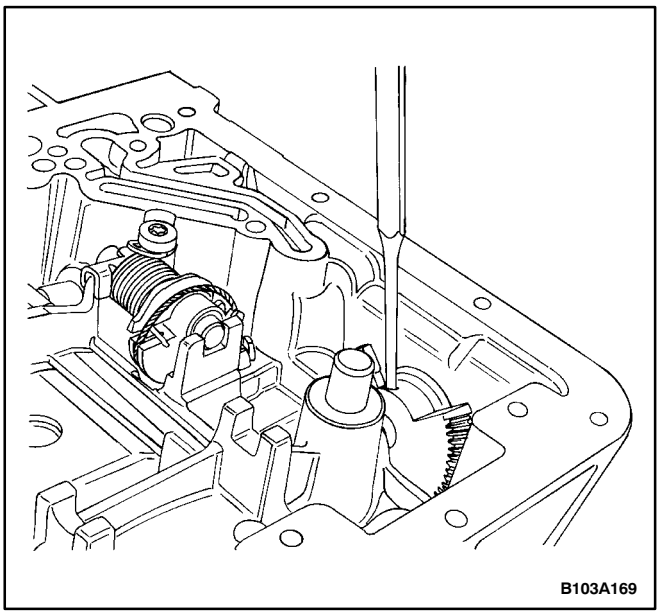

9. Remove the spring plate and pull out the selector shaft as far as needed to insert the washer between the selector shaft cam and the transmission case.
10. Once the selector shaft is back in place, install the roll pin.

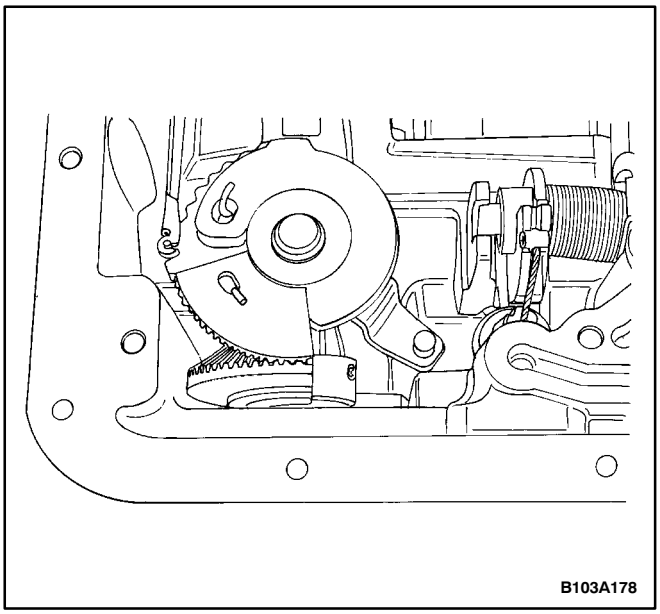

11. The teeth of the PARK cam and the selector shaft cam must be aligned properly.

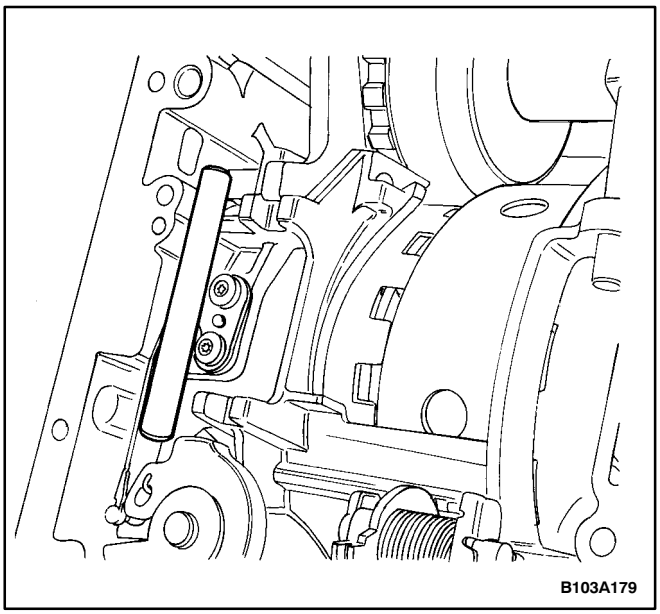

12. Install the connecting rod.

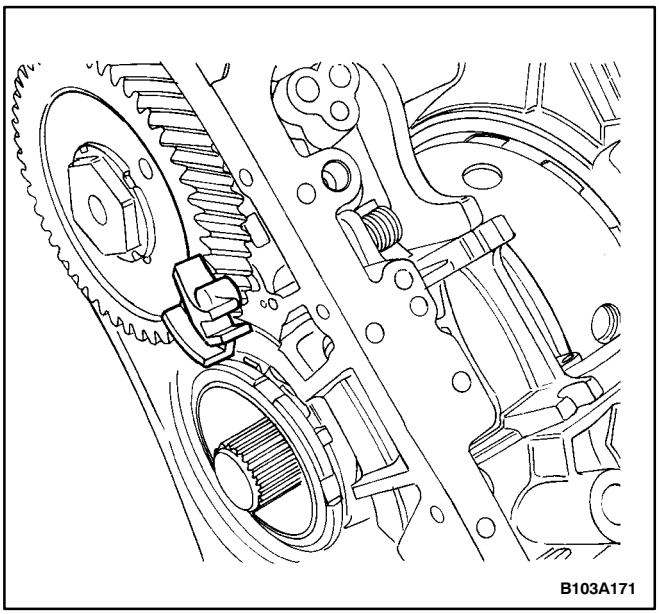

13. Install the plastic holding fixture.

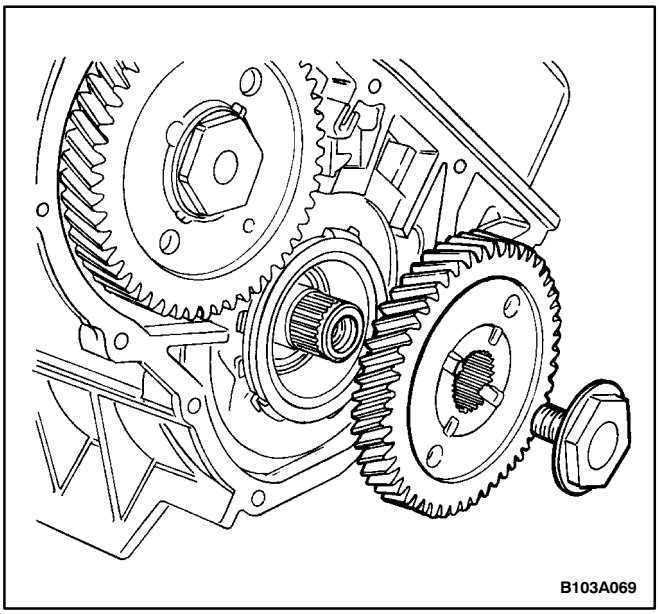

14. Install the small spur gear. Install the securing bolt onto the smaller spur gear.
15. Adjust the clearance on the output shaft. Refer to “Major Component Assembly” in this section.
16. Install the side cover gasket and the side cover. Refer to “Case Side Cover Pan and Gasket” in this section.
17. Install the valve body. Refer to “Valve Body” in this section.
18. Install the fluid pan cover gasket and the fluid pan cover. Refer to “Pan and Gasket” in this section.
19. Install the transaxle into the vehicle. Refer to “Transaxle Assembly” in this section.

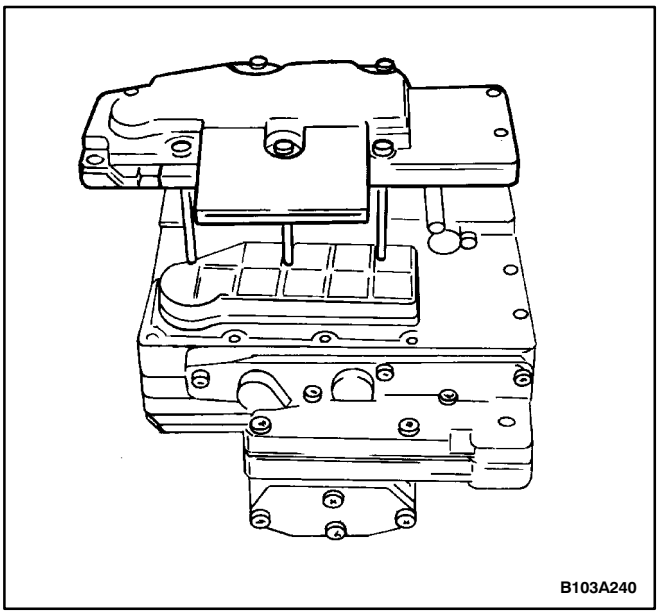

VALVE BODY

Disassembly Procedure

1. Remove the transaxle from the vehicle. Refer to “Transaxle Assembly” in this section.
2. Remove the valve body from the transaxle. Refer to “Major Component Disassembly” in this section.
3. Remove the fluid filter housing.

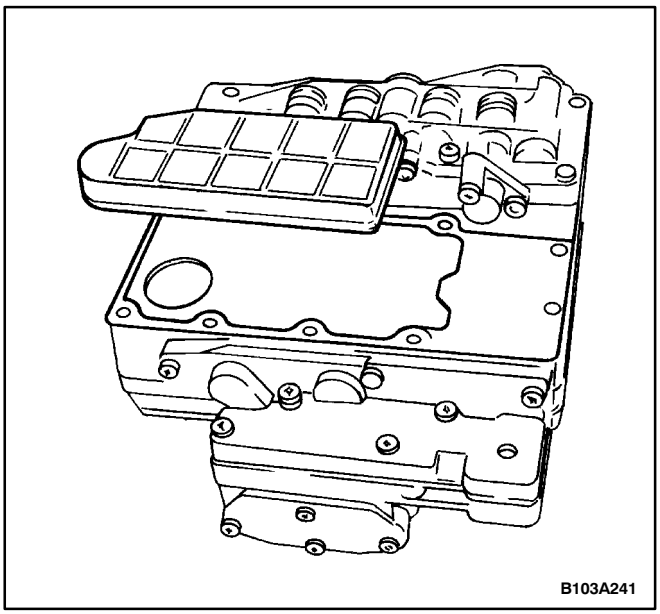

4. Remove the fluid filter and the gasket.

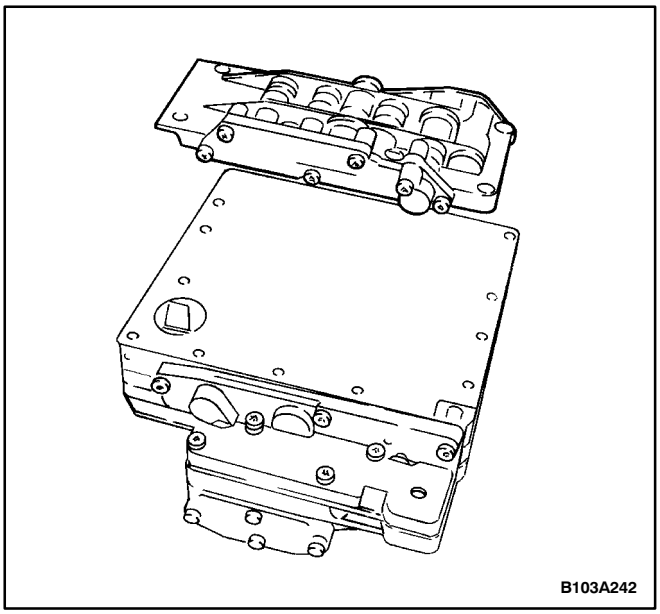

5. Remove the lower valve housing bolts and remove the lower valve housing.

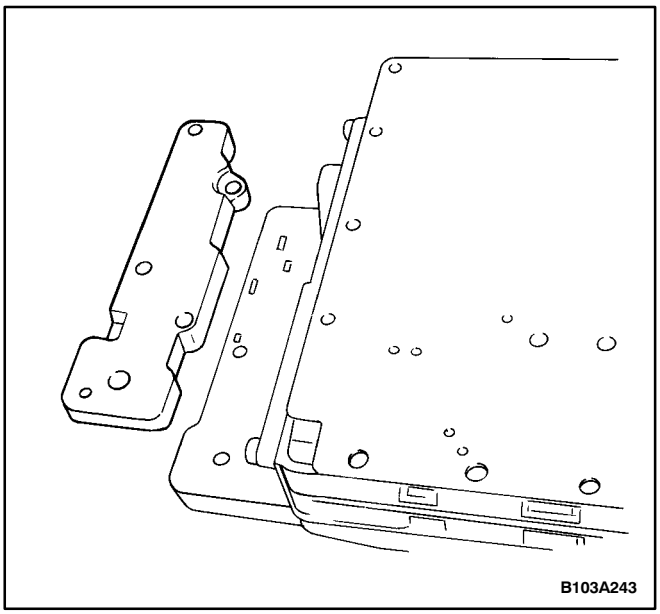

6. Remove the lower cover.

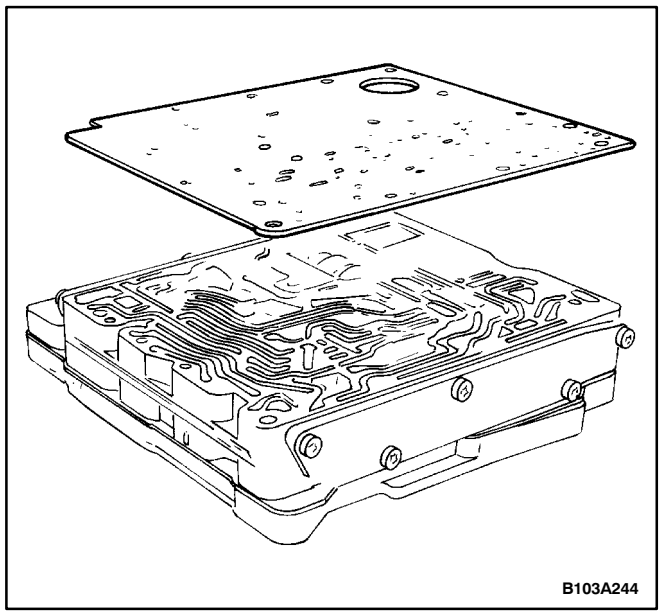

7. Remove the lower intermediate plate.

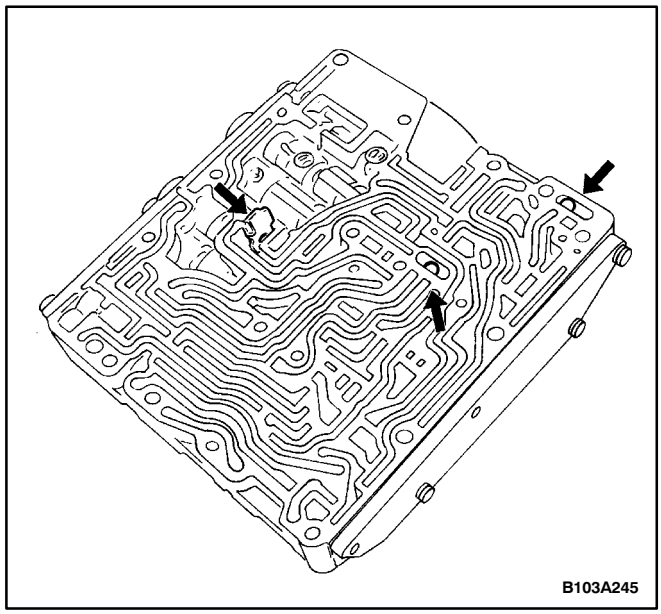

8. Remove the change valve balls and the clip from the lower side of the valve housing.

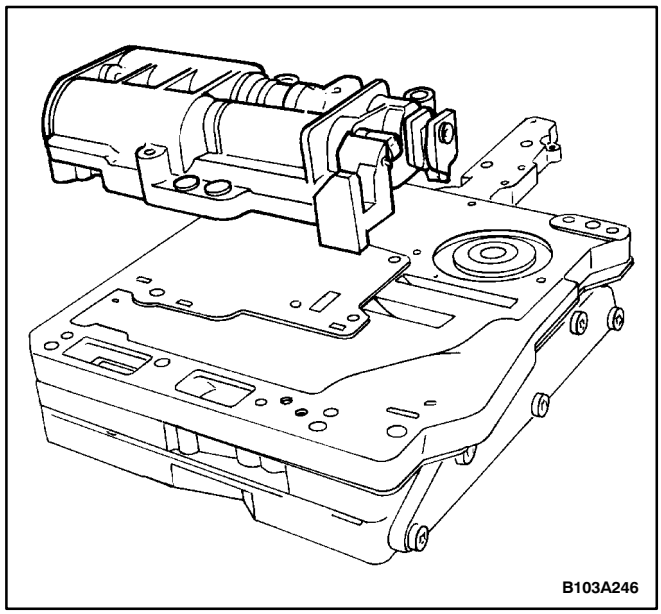

9. Turn the valve body over.
10. Remove the clutch A and the brake D housing.

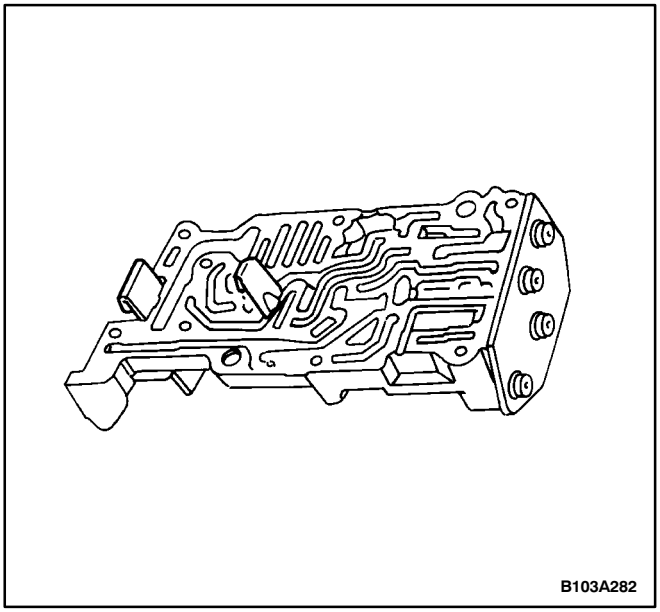

11. Replace the clips on the under side of the housing, if necessary.

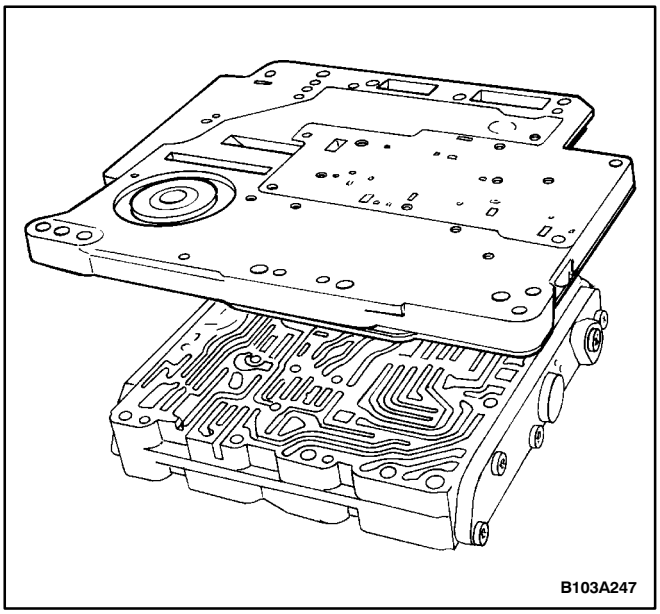

12. Keep the fluid passage plate and the upper intermediate plate together, separating them as a unit from the upper side of the valve housing. Turn them over before placing them on the table.

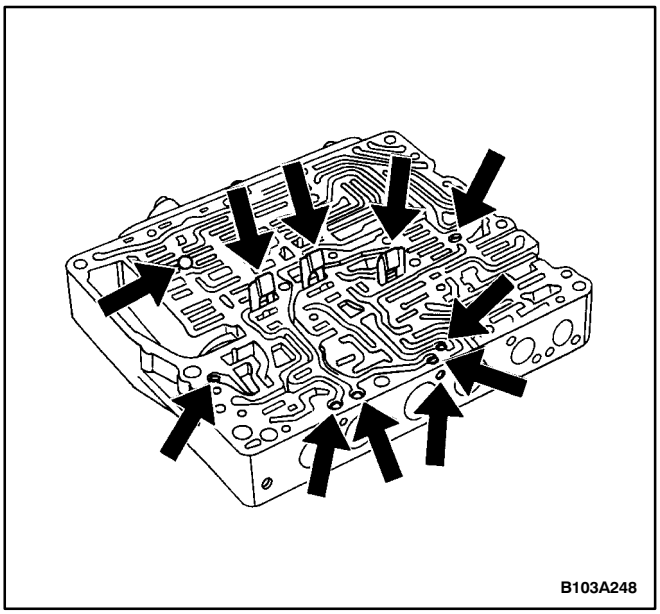

13. Remove the breather ball, the clips, and the restrictors from the upper side of the valve housing.

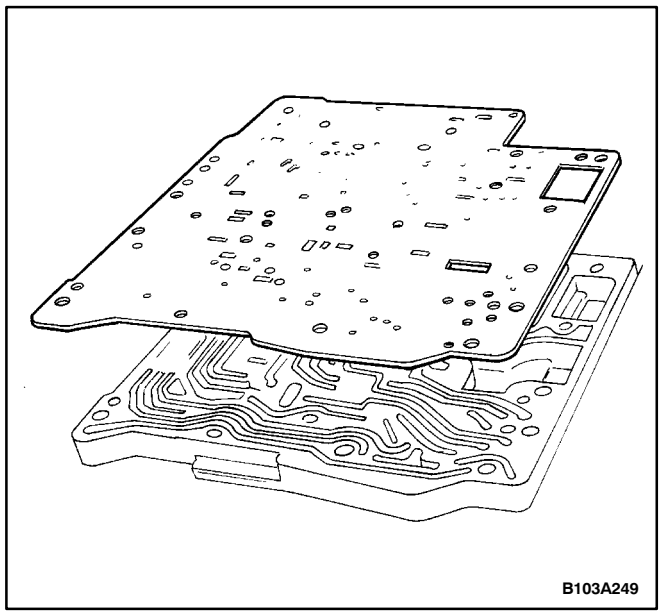

14. Separate the upper intermediate plate from the fluid passage plate.

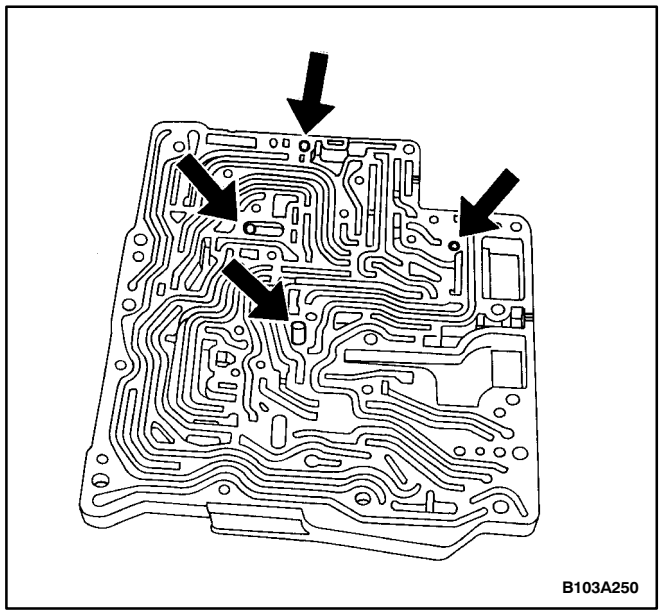

15. Remove the restrictors, the centralizing pin, and the supply ball from the fluid channel housing.

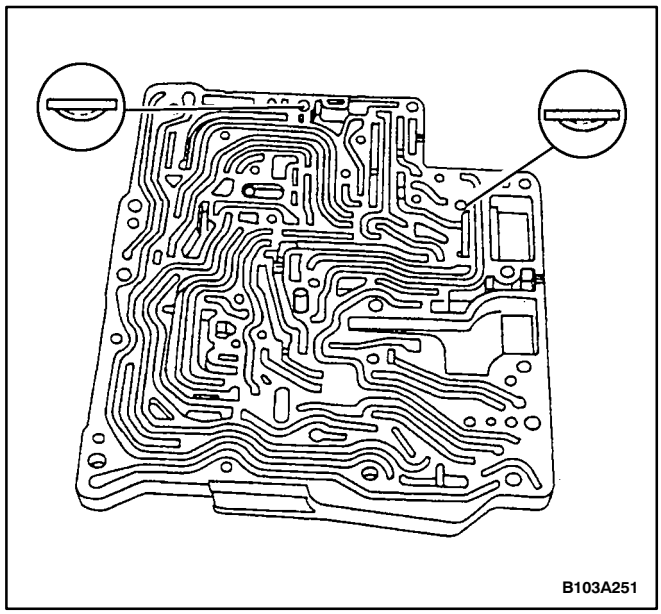

Assembly Procedure

Important: The restrictors go into the housings in a certain orientation. Be sure to seat properly each restrictor.

1. Install the centralizing pin, the supply ball, and the damper restrictors into the fluid channel housing.

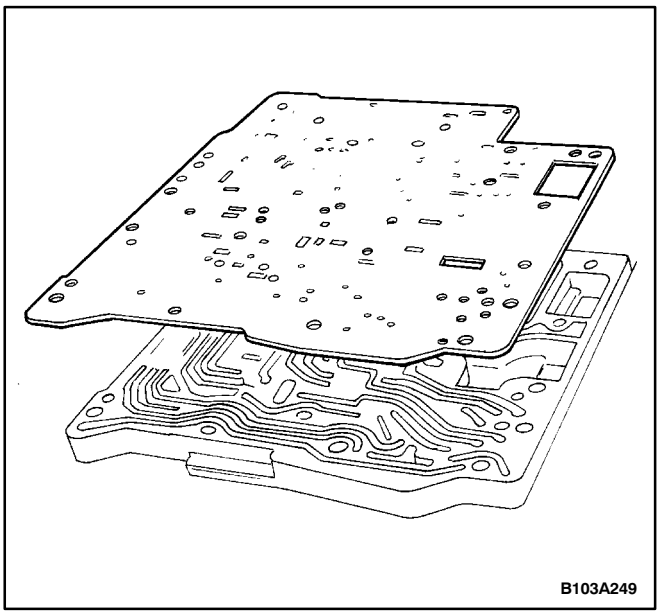

2. Place the upper intermediate plate onto the fluid passage plate.

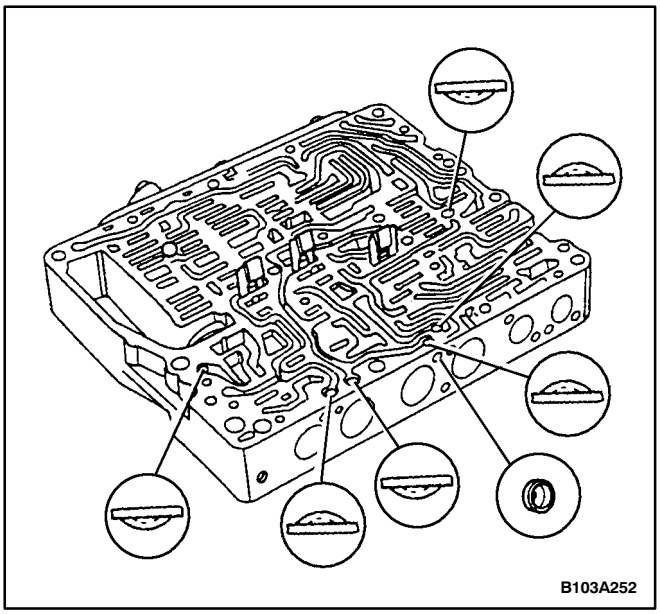

3. Install the breather ball, the clips, and the restrictors into the upper side of the valve housing.

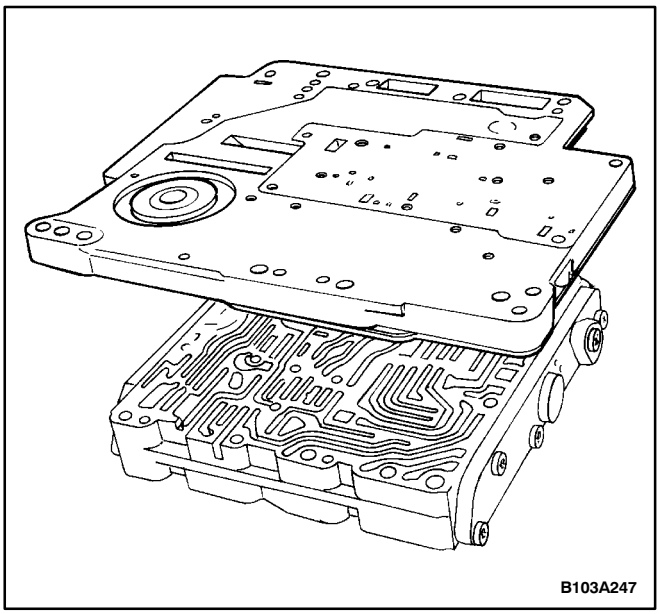

4. Holding the upper intermediate plate to the fluid passage plate, turn them over and place them on the upper side of the valve housing.

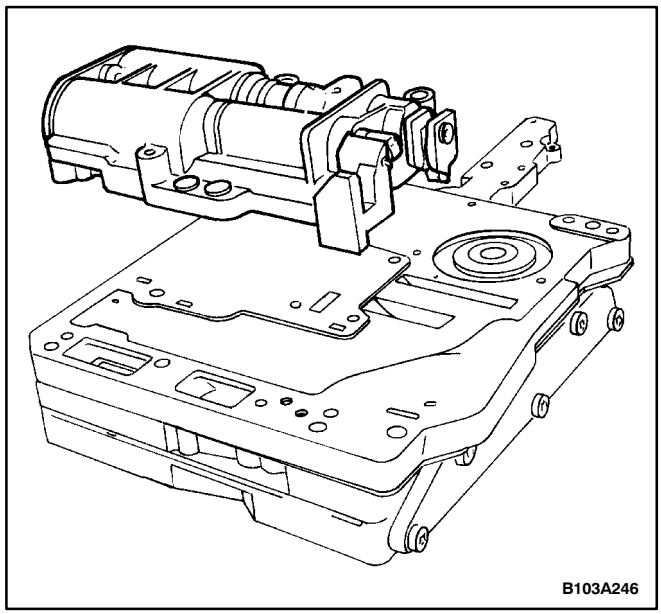

5. Install the clips into the clutch A and the brake D housing.
6. Install the clutch A and the brake D housing with the bolts.

Tighten

Tighten the clutch A and the brake D housing attachment bolts to 8 N•m (71 lb-in).

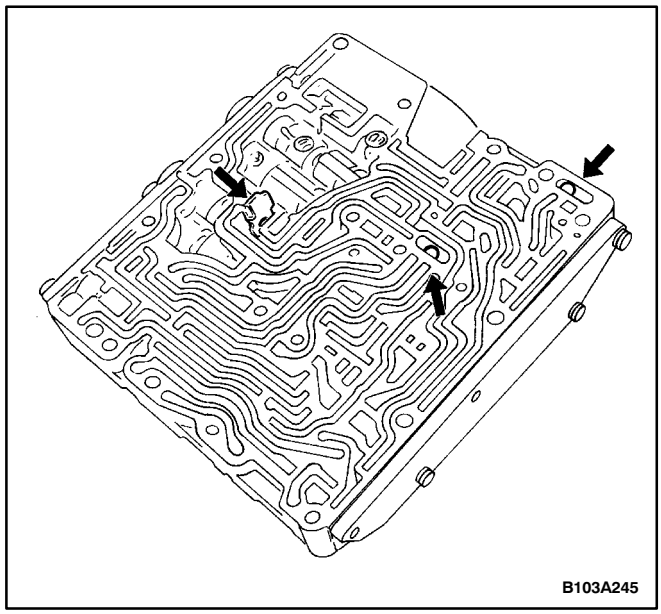

7. Turn over the valve body.
8. Install the change valve balls and the clip them into the lower side of the valve housing.

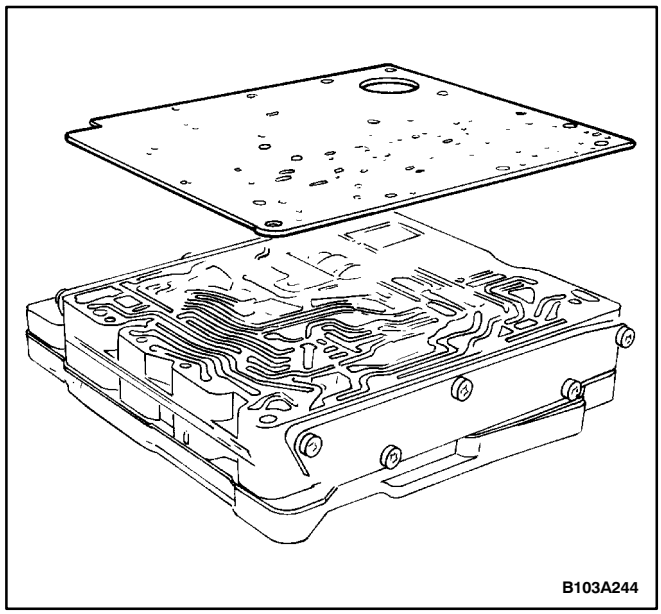

9. Install the lower intermediate plate.

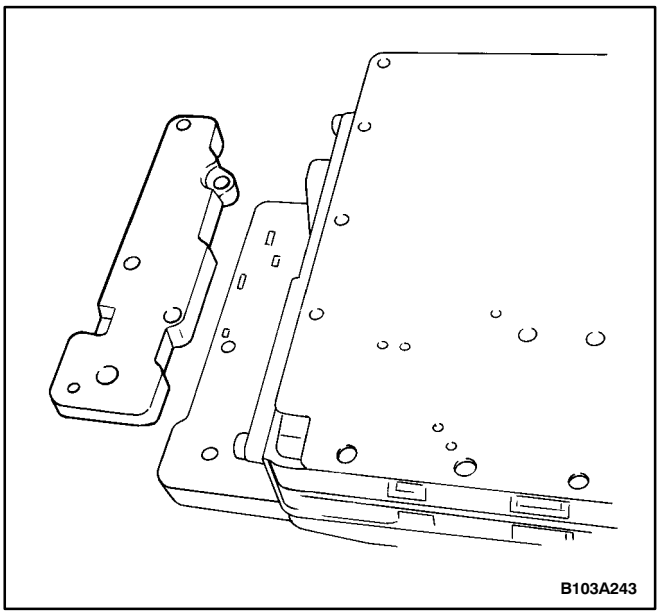

10. Install the lower cover with the bolts.

Tighten

Tighten the lower cover attachment bolts to 8 N•m (71 lb-in).

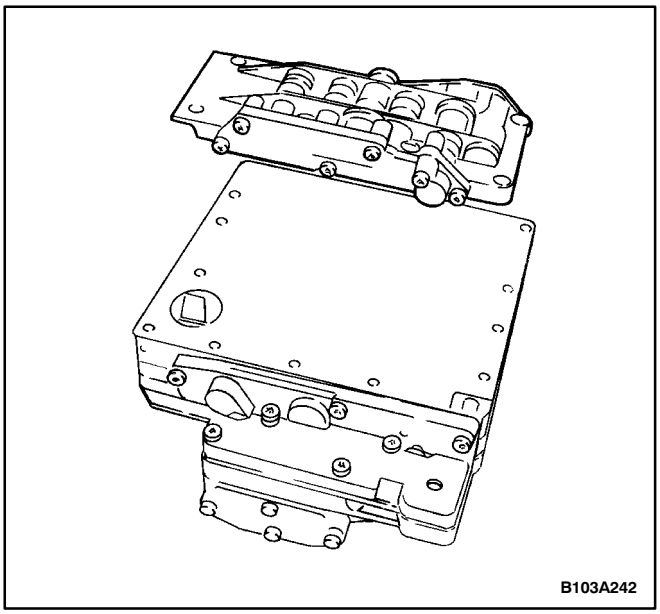

11. Install the lower valve housing with the bolts.

Tighten

Tighten the lower valve housing attachment bolts to 8 N•m (71 lb-in).

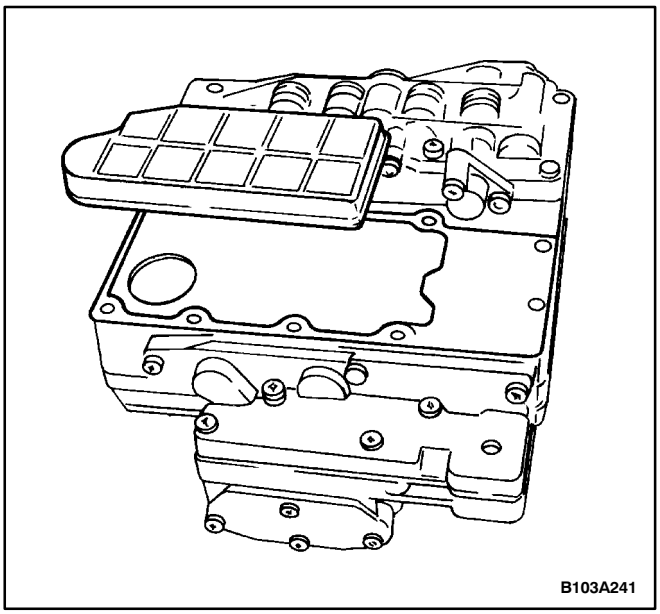

12. Install the fluid filter and the gasket.

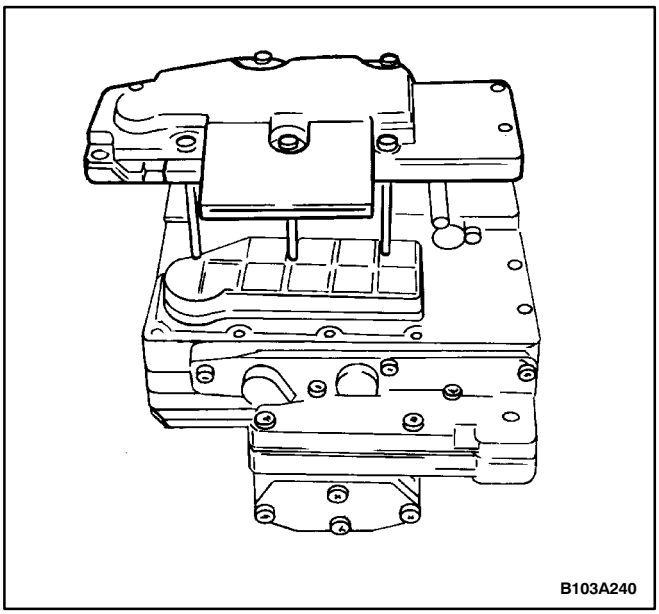

13. Install the fluid filter housing with the bolts.

Tighten

Tighten the fluid filter housing cover attaching bolts to 8 N•m (71 lb-in).

14. Install the valve body into the transaxle. Refer to “Major Component Assembly” in this section.
15. Install the transaxle into the vehicle. Refer to “Transaxle Assembly” in this section.

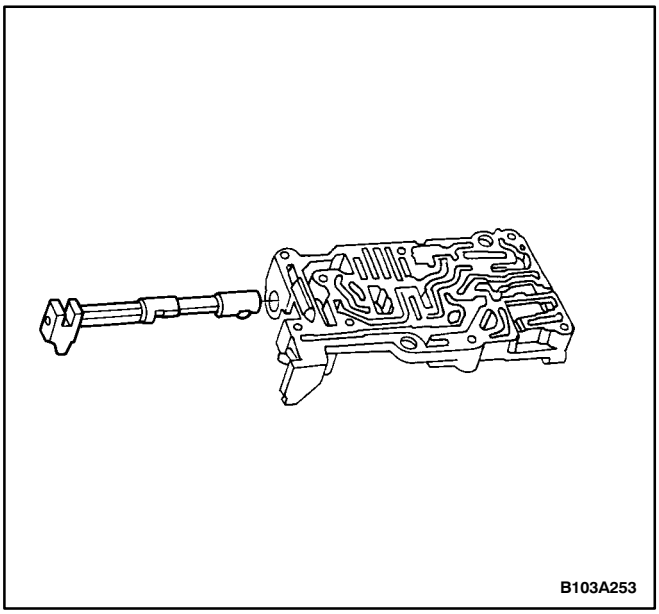

CLUTCH A AND BRAKE D HOUSING

Disassembly Procedure

Important: Use caution when removing the covers from the housing as the valve springs can get lost easily.

1. Remove the transaxle from the vehicle. Refer to “Transaxle Assembly” in this section.
2. Remove the valve body from the transaxle. Refer to “Major Component Disassembly” in this section.
3. Remove the clutch A and the brake D housing from the valve body. Refer to “Valve Body” in this section.
4. Remove the selection shuttle valve.

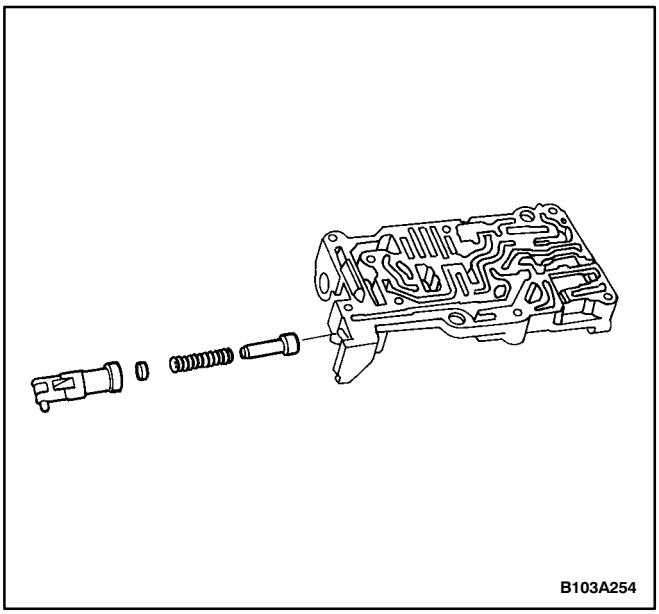

5. Remove the load correction pressure shuttle valve and the spring.

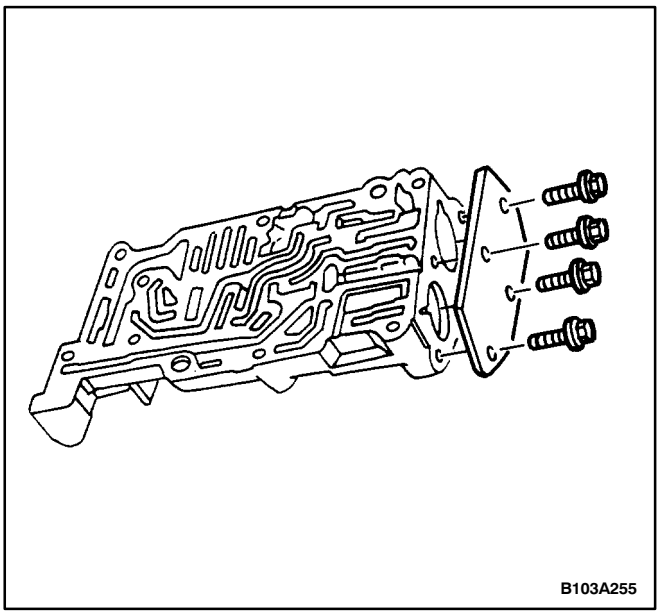

6. Remove the shuttle valve cover from the clutch A and the brake D housing.

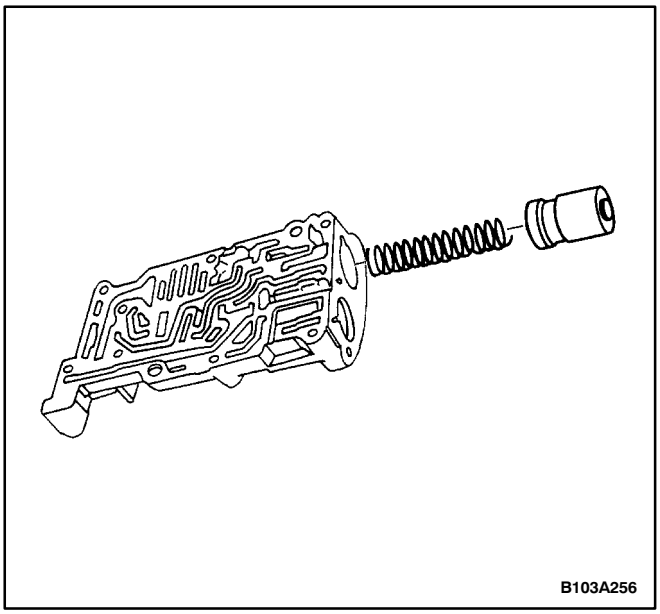

7. Remove the brake D shuttle valve and the spring from the housing.

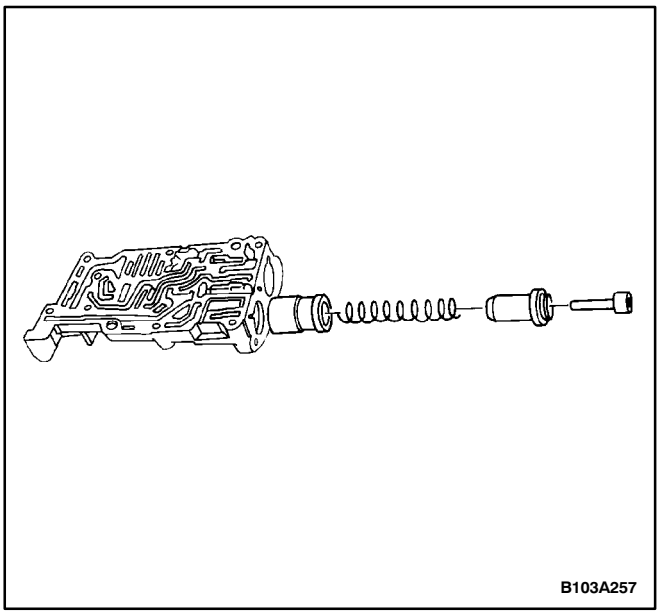

8. Remove the clutch A shuttle valve and the spring from the housing.

Assembly Procedure

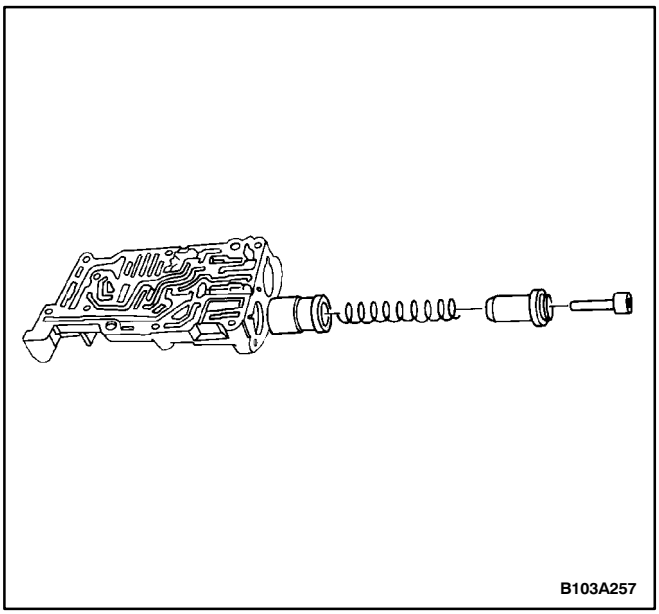

1. Install the clutch A shuttle valve and the spring into the housing.

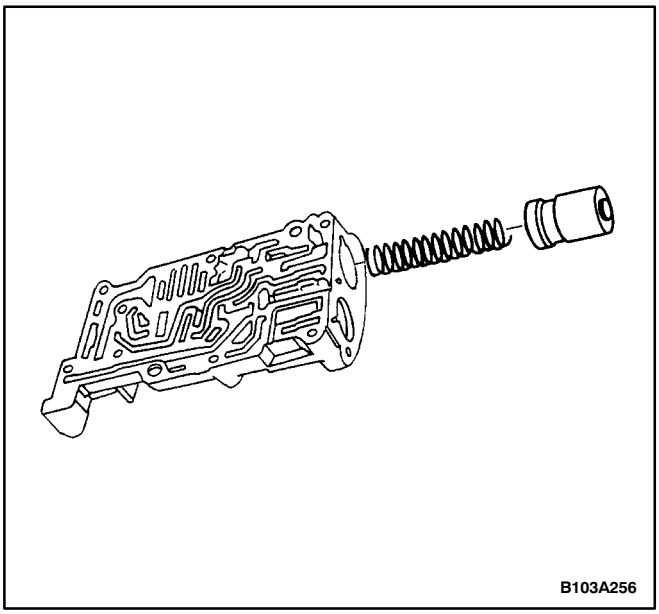

2. Install the brake D shuttle valve and the spring into the housing.

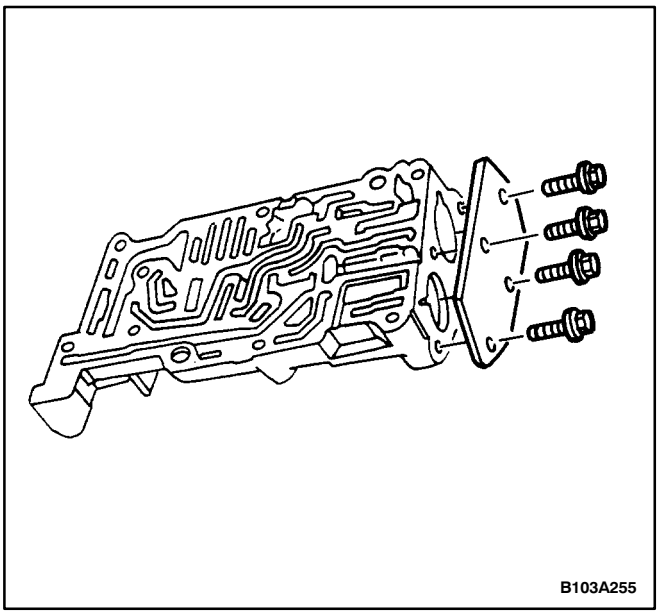

3. Install the shuttle valve cover onto the clutch A and the brake D housing with the bolts.

   Tighten

   Tighten the shuttle valve cover attachment bolts to 8 N•m (71 lb-in).

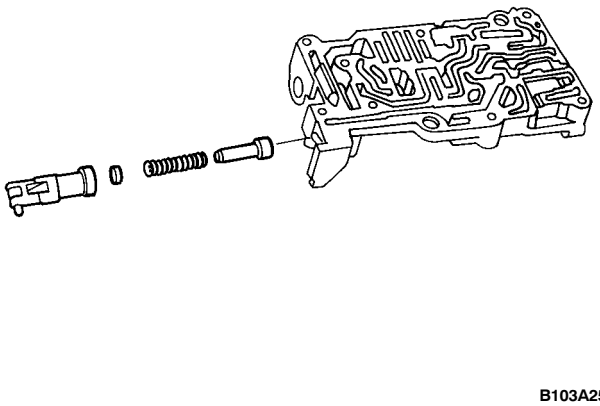

B103A254

4. Install the load correction pressure shuttle valve and the spring.

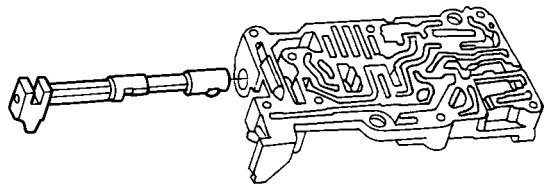

B103A253

5. Install the selection shuttle valve.
6. Install the clutch A and the brake D housing onto the valve body. Refer to “Valve Body” in this section.
7. Install the valve body into the transaxle. Refer to “Major Component Disassembly” in this section.
8. Install the transaxle into the vehicle. Refer to “Transaxle Assembly” in this section.

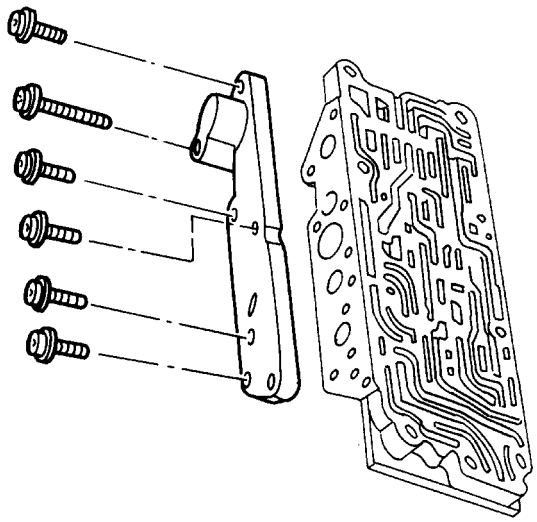

B103A263

LOWER VALVE HOUSING

Disassembly Procedure

Important: Use caution when removing the covers from the sides of the housing as the valve springs can get lost easily.

1. Remove the transaxle from the vehicle. Refer to “Transaxle Assembly” in this section.
2. Remove the valve body from the transaxle. Refer to “Major Component Disassembly” in this section.
3. Remove the lower valve housing. Refer to “Valve Body” in this section.
4. Remove the lower valve housing exterior cover bolts and the exterior cover.

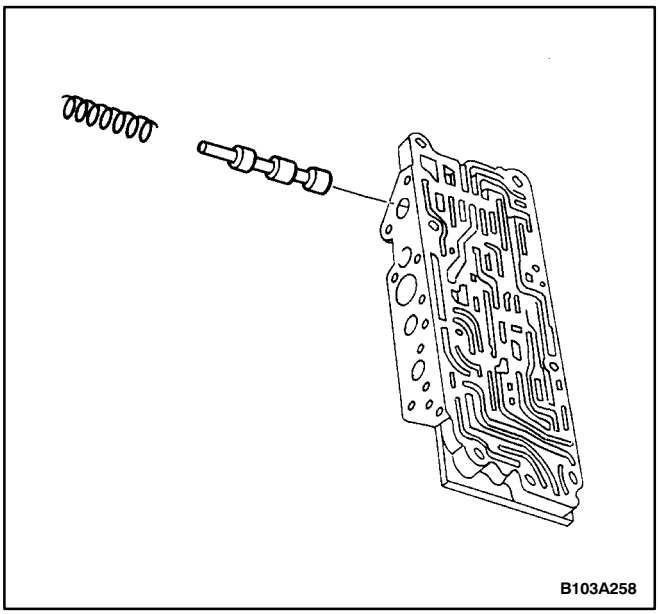

5. Remove the first-second speed change shuttle valve and spring.

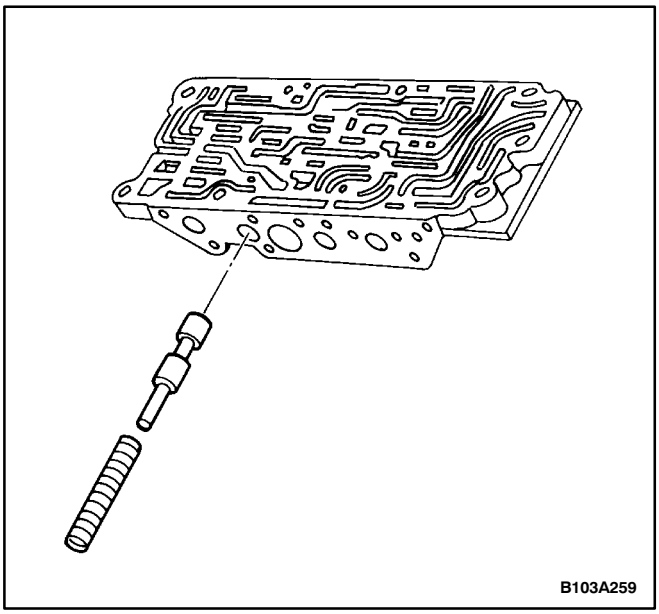

6. Remove the second speed lock shuttle valve and spring.

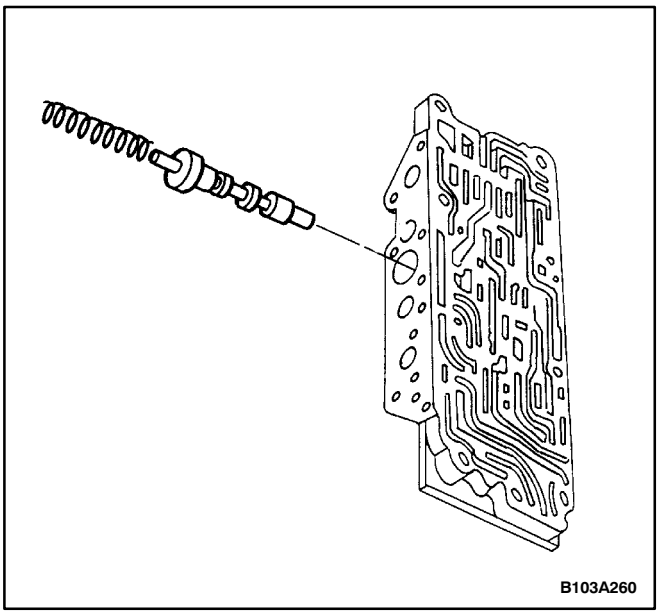

7. Remove the control shuttle valve and the restrictor C′ spring.

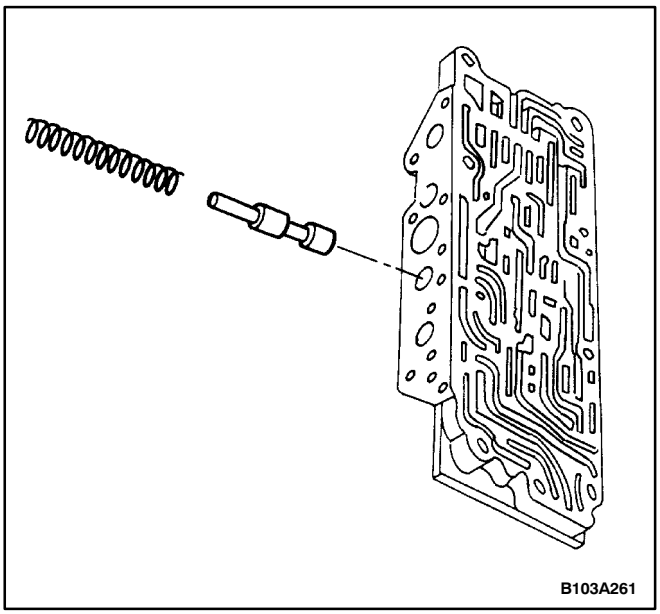

8. Remove the position 3 shuttle valve and the spring.

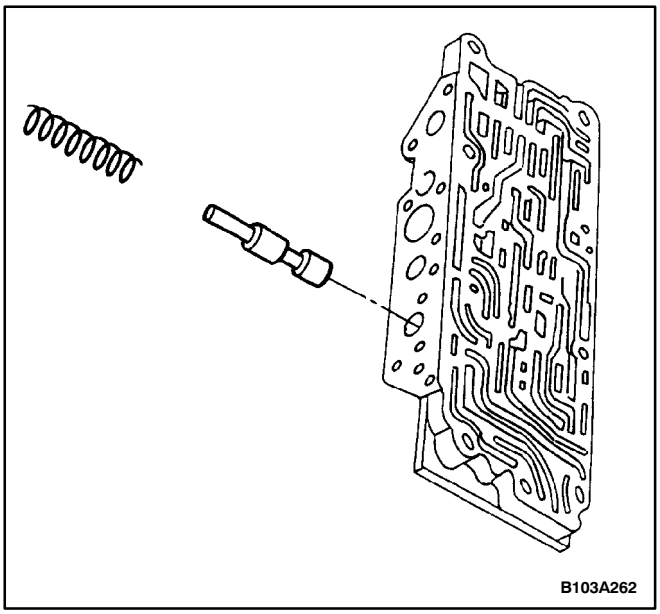

9. Remove the 4-3-2 shuttle valve and the spring.

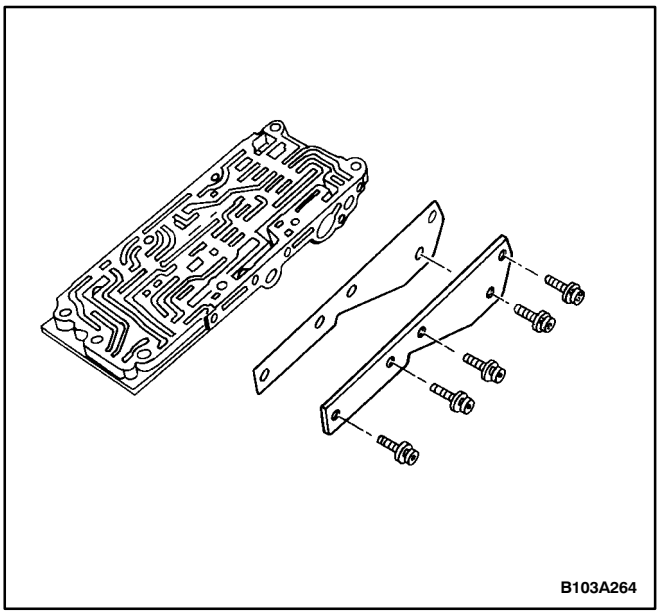

10. Remove the lower valve housing interior cover bolts, the lower valve housing interior cover, and the joint.

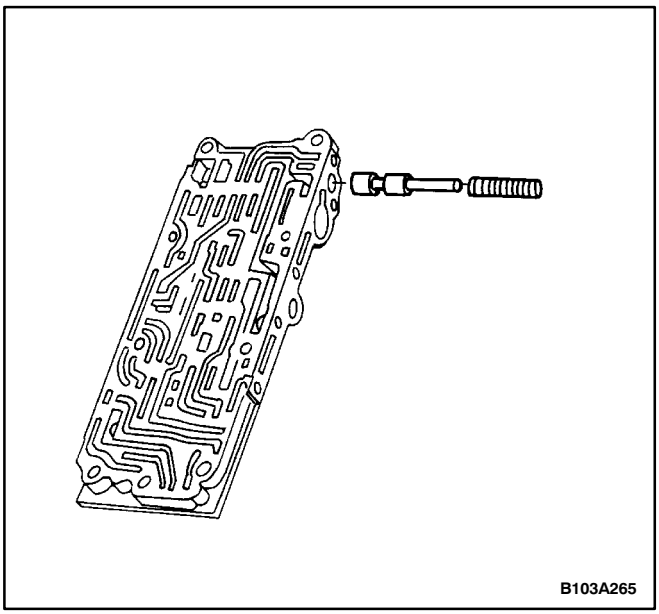

11. Remove the 2-3-4 change up shuttle valve and the spring.

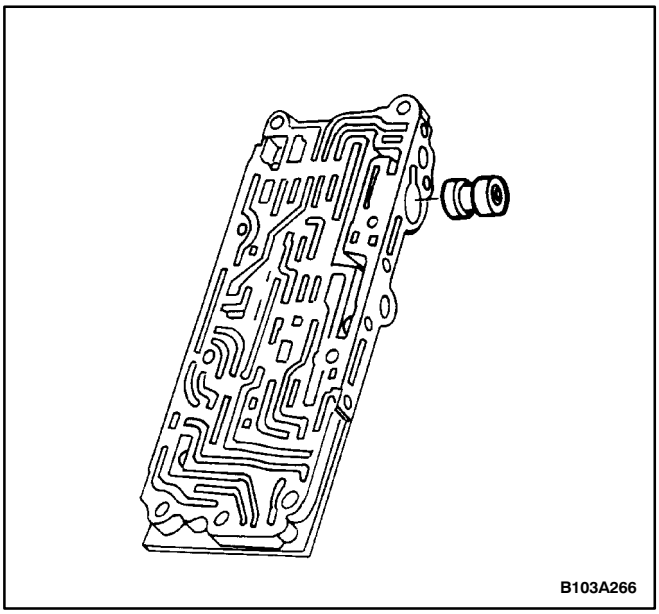

12. Remove the 1-2 change valve.

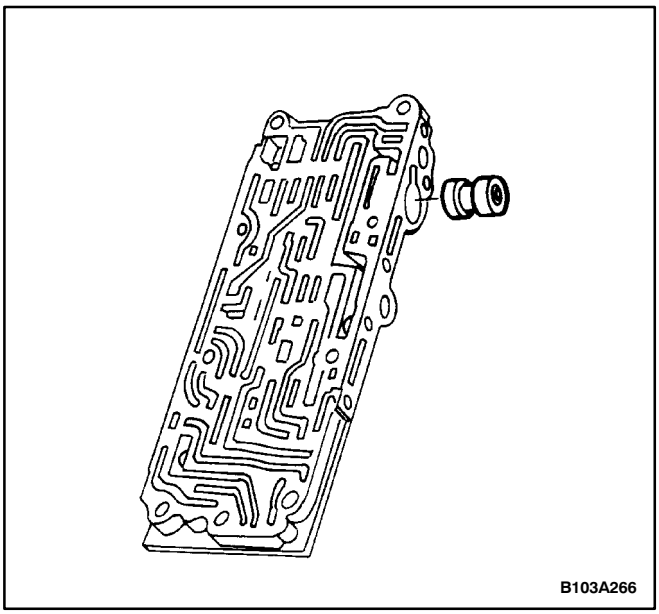

Assembly Procedure

1. Install the 1-2 change valve.

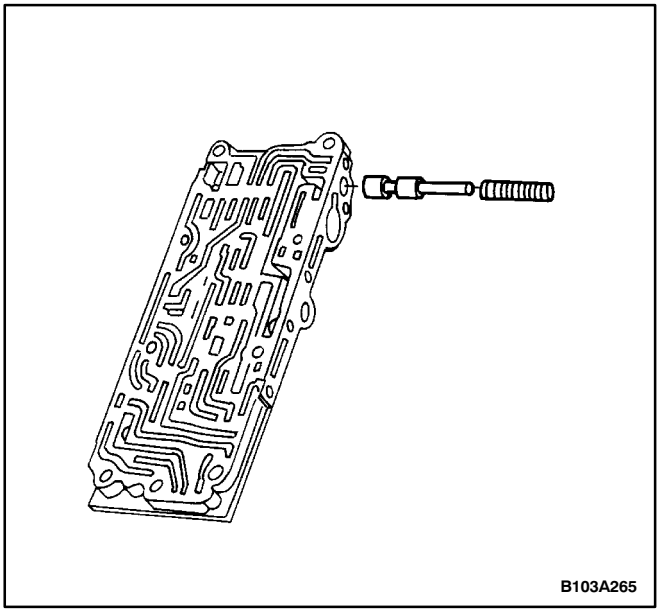

2. Install the 2-3-4 change up shuttle valve and the spring.

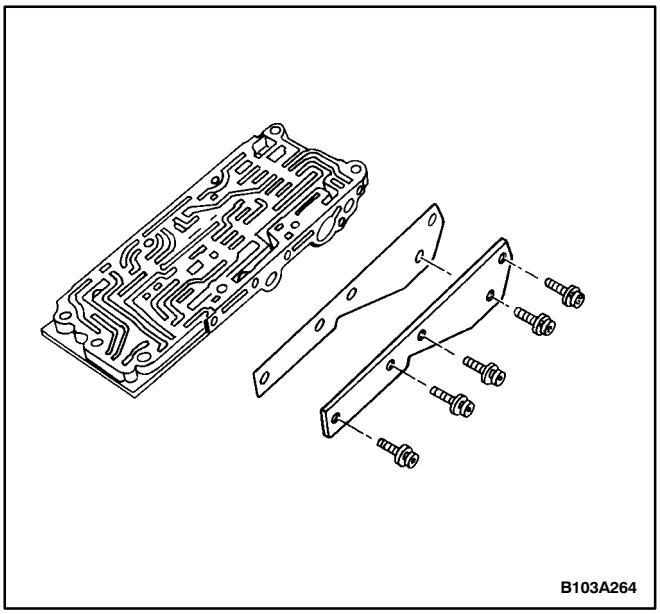

3. Install the lower valve housing interior cover and the joint with the bolts.

Tighten

Tighten the lower valve housing interior cover bolts to 8 N•m (71 lb-in).

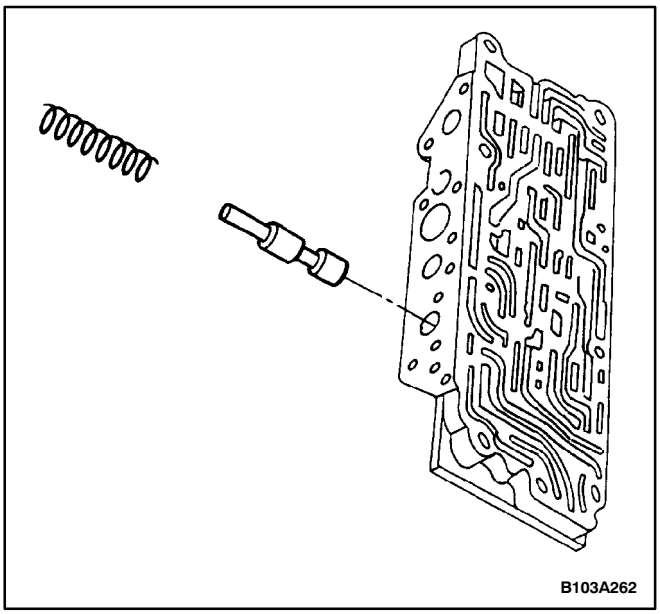

4. Install the 4-3-2 shuttle valve and the spring.

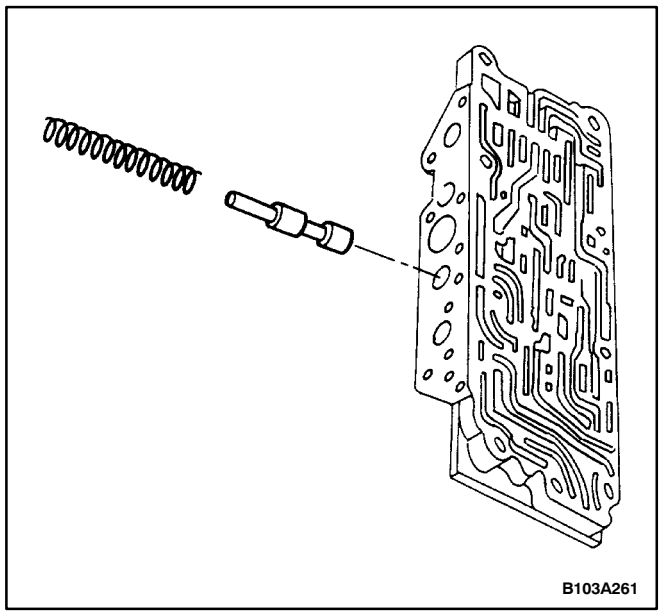

5. Install the position 3 shuttle valve the spring.

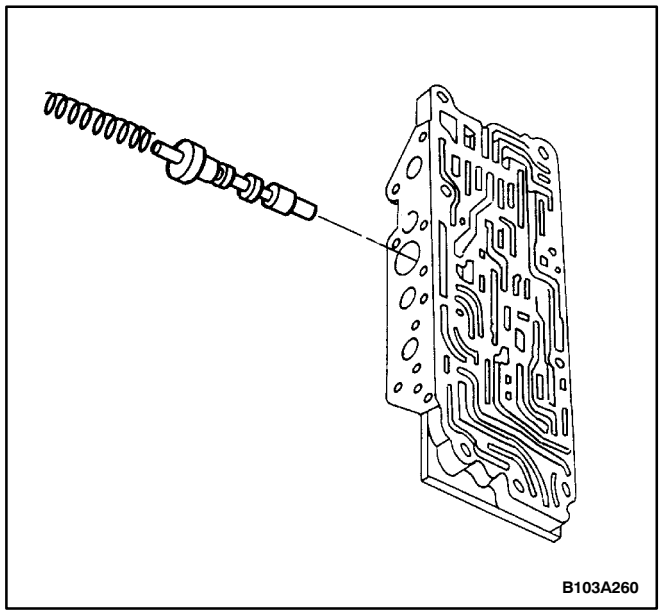

6. Install the control shuttle valve and the restrictor C′ spring.

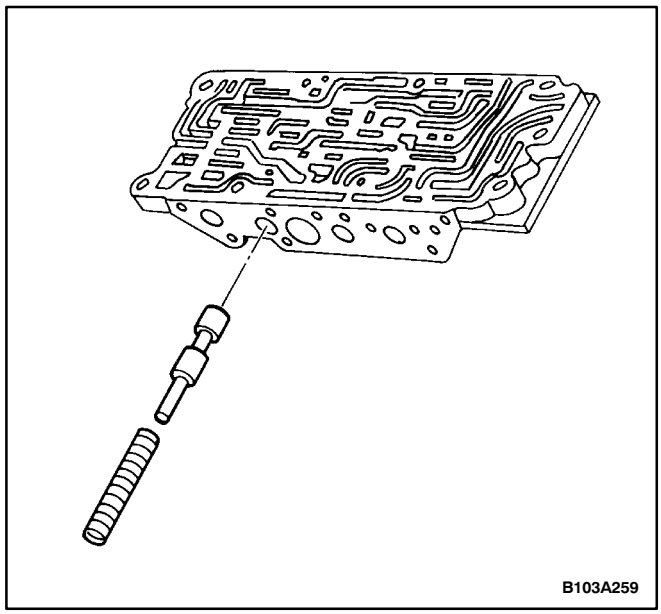

7. Install the second speed lock shuttle valve and the spring.

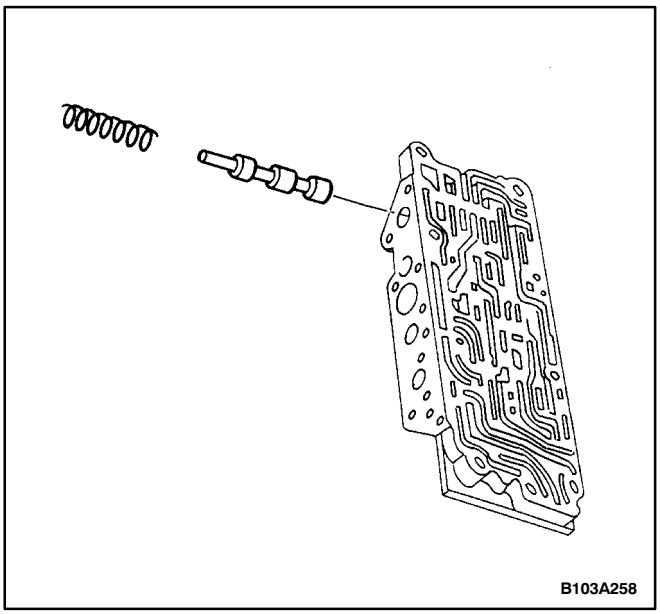

8. Install the first-second speed change shuttle valve and the spring.

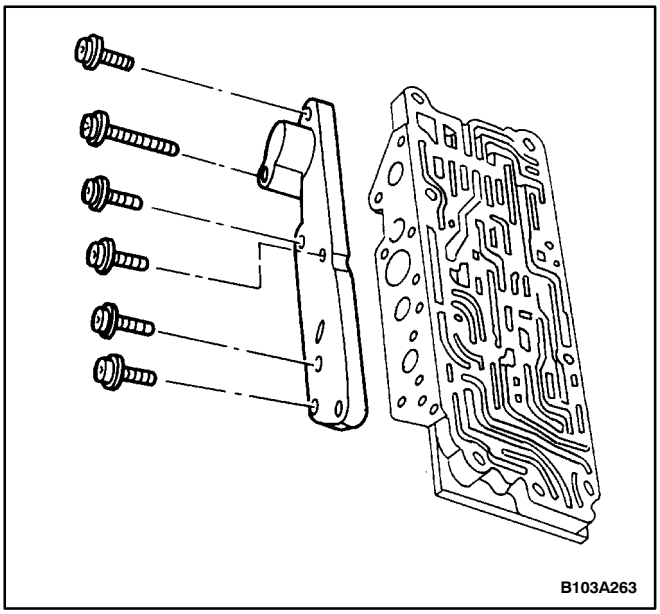

9. Install the lower valve housing exterior cover with the bolts.

Tighten

Tighten the lower valve housing exterior cover bolts to 8 N•m (71 lb-in).

10. Install the lower valve housing. Refer to “Valve Body” in this section.
11. Install the valve body onto the transaxle. Refer to “Major Component Assembly” in this section.
12. Install the transaxle into the vehicle. Refer to “Transaxle Assembly” in this section.

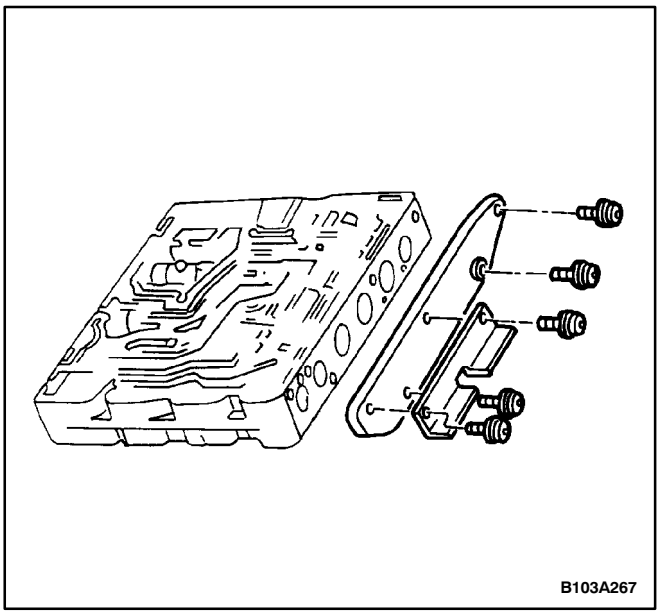

VALVE HOUSING

Disassembly Procedure

Important: Use caution when removing the covers from the sides of the housing as the valve springs can get lost easily.

1. Remove the transaxle from the vehicle. Refer to “Transaxle Assembly” in this section.
2. Remove the valve body from the transaxle. Refer to “Major Component Disassembly” in this section.
3. Remove the valve housing. Refer to “Valve Body” in this section.
4. Remove the valve housing damper valve side cover bolts and the valve housing damper valve side cover.

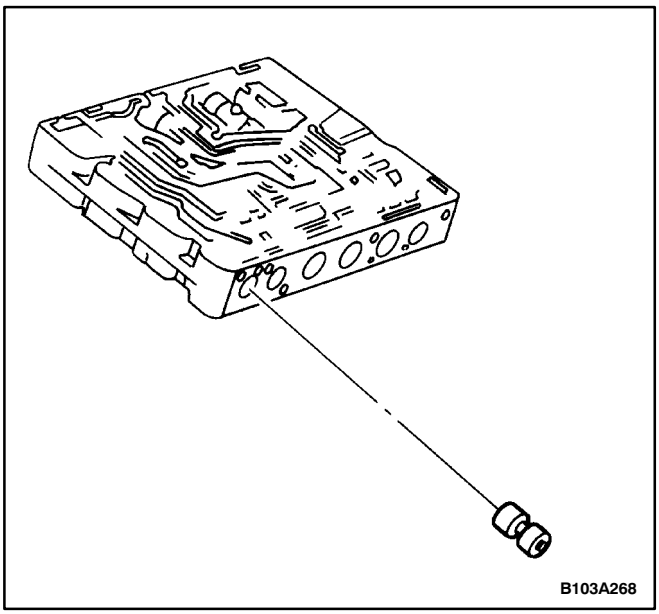

5. Remove the 3-4 change valve.

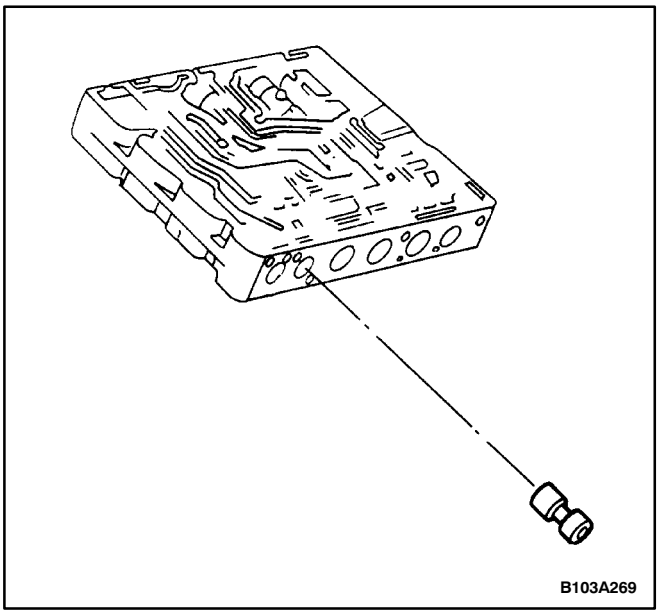

6. Remove the 2-3 change valve.

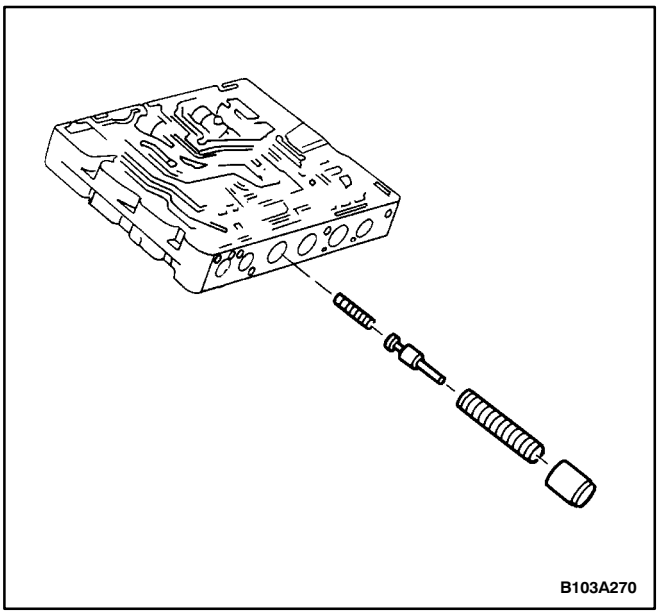

7. Remove the delay shuttle valve and the delay shuttle valve inner and the outer spring.

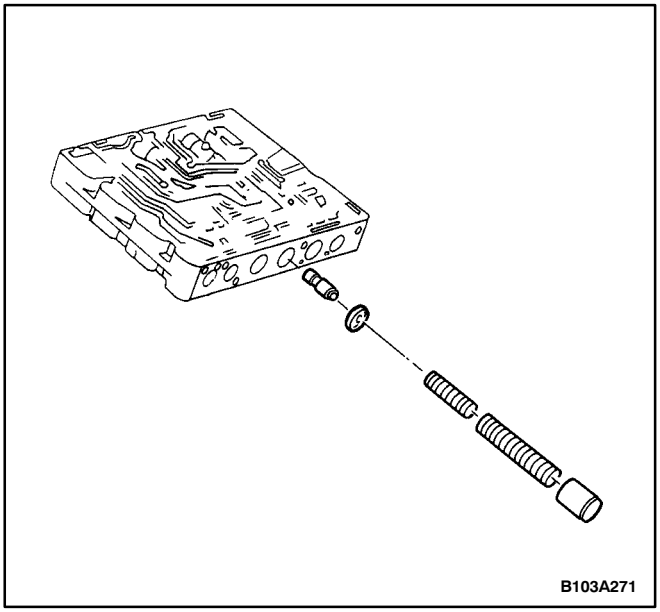

8. Remove the brake C′ damper shuttle valve and the brake C′ damper shuttle valve inner and the outer spring.

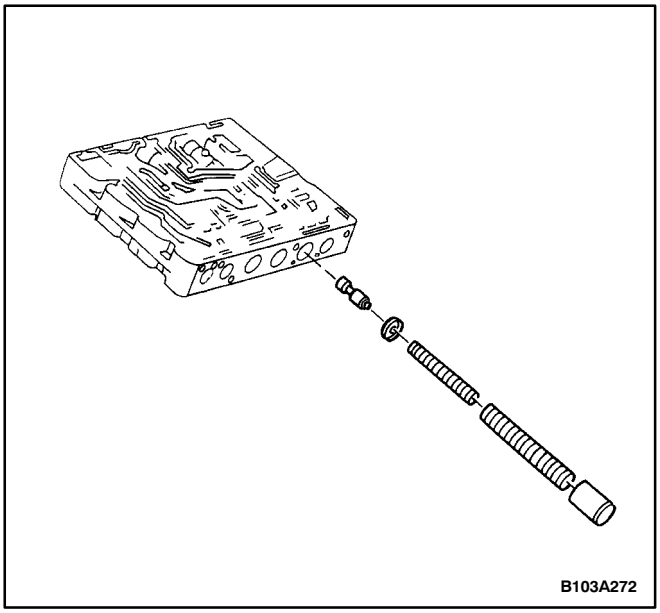

9. Remove the clutch E shuttle valve and the clutch E shuttle valve inner and the outer spring.

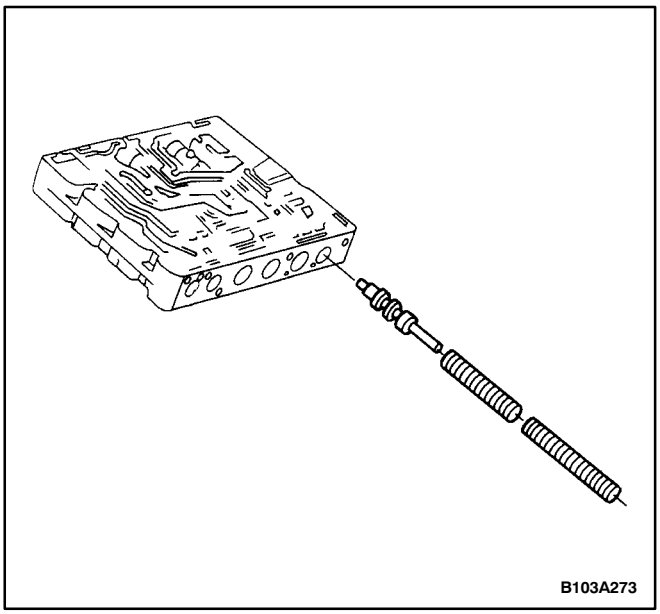

10. Remove the main pressure shuttle valve and the main pressure shuttle valve inner and the outer spring.

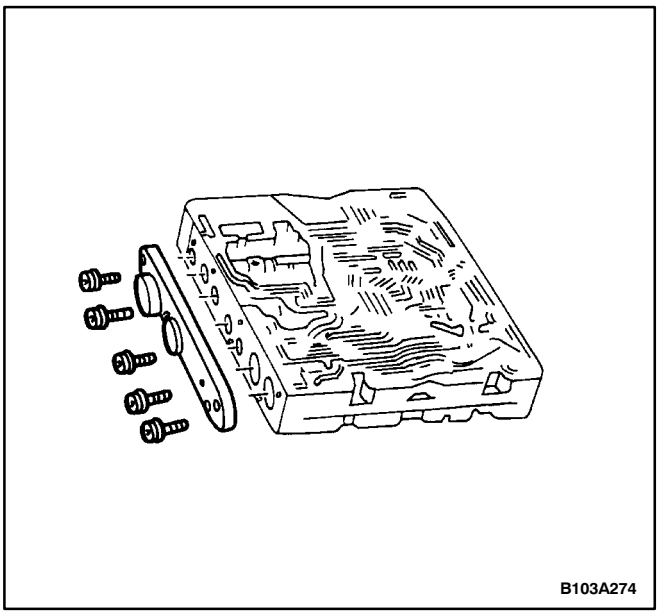

11. Remove the valve housing control valve side cover attachment bolts and the valve housing control valve side cover.

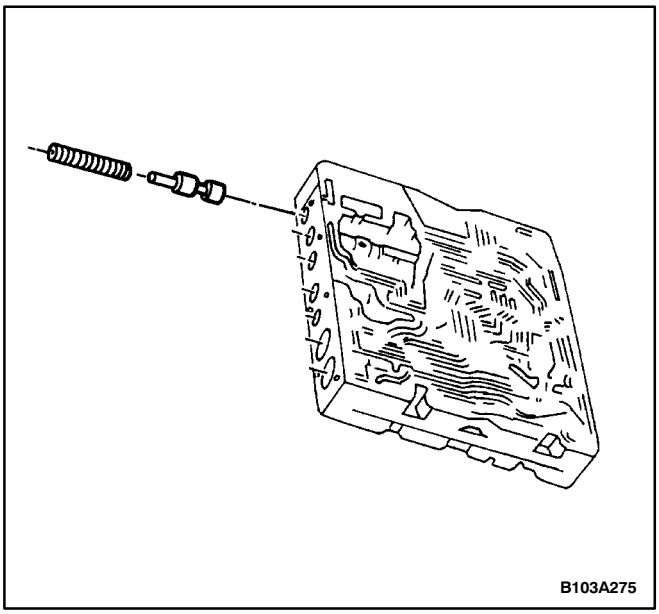

12. Remove the 4-3 change shuttle valve and the spring.

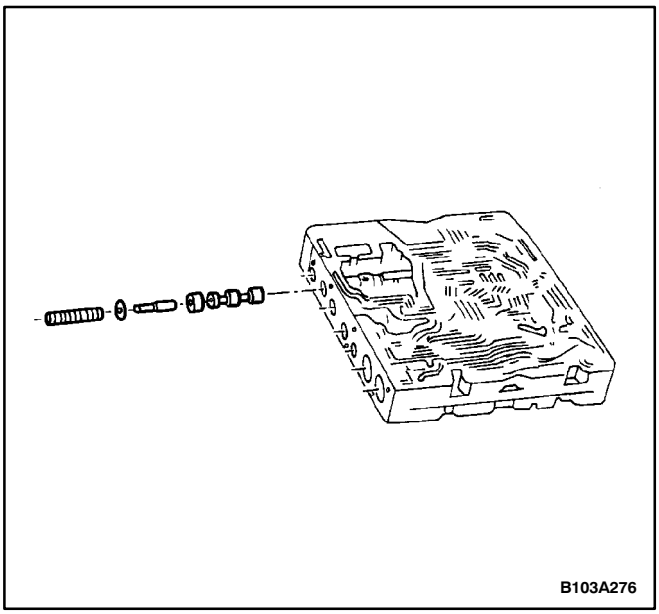

13. Remove the 3-4 change shuttle valve and the spring.

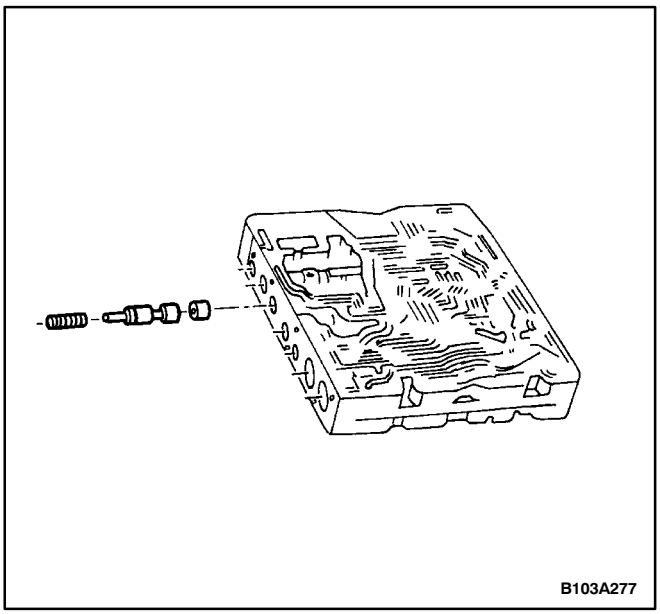

14. Remove the 4-3 kickdown shuttle valve and the spring.

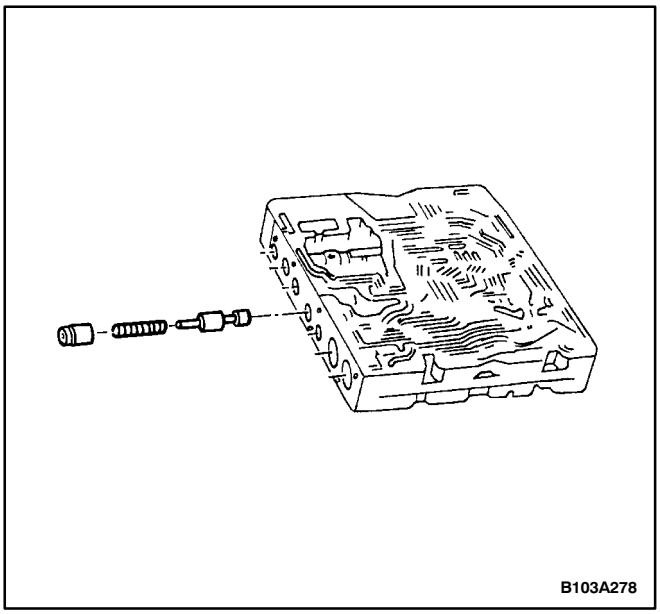

15. Remove the modulation pressure shuttle valve and the spring.

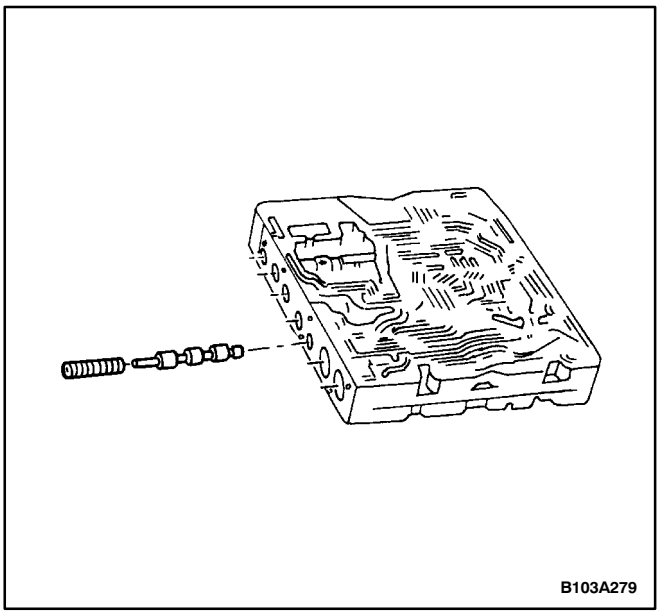

16. Remove the first and the reverse lock shuttle valve and the spring.

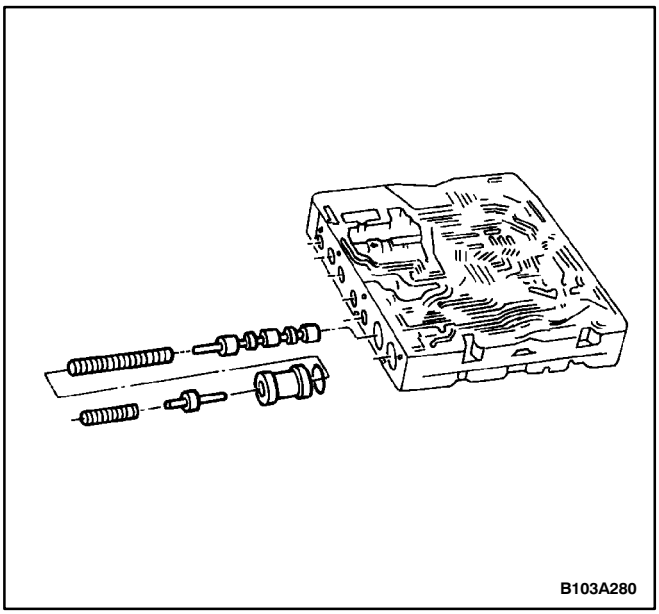

17. Remove the 1-2-3 line control shuttle valve and the spring.
18. Remove the 2-3 line change shuttle valve and the spring.

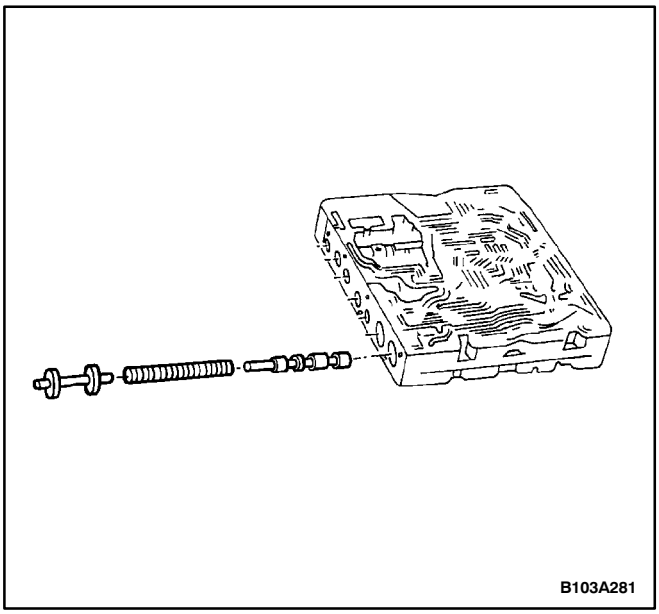

19. Remove the 3-4 change shuttle valve and the spring.

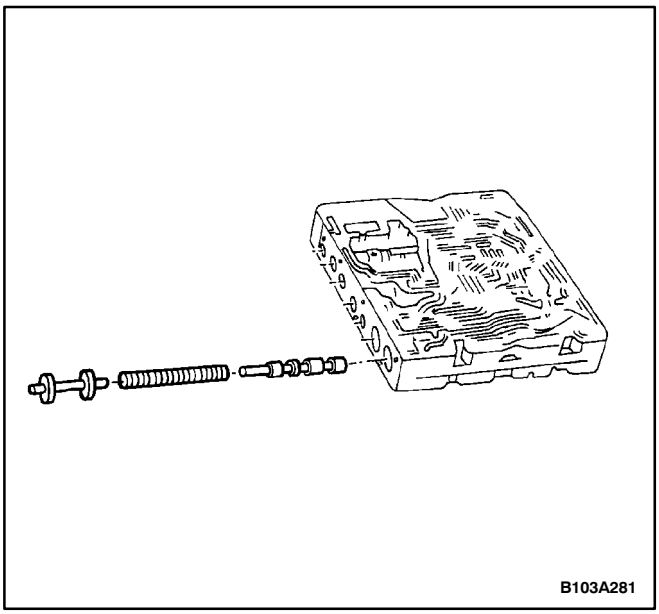

Assembly Procedure

1. Install the 3-4 change shuttle valve and the spring.

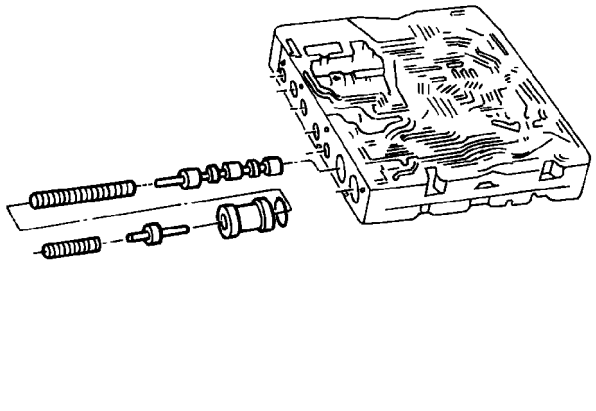

B103A280

2. Install the 1-2-3 line control shuttle valve and the spring.
3. Remove the 2-3 line change shuttle valve and the spring.

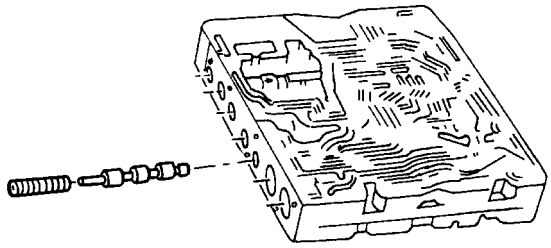

B103A279

4. Install the first and the reverse lock shuttle valve and the spring.

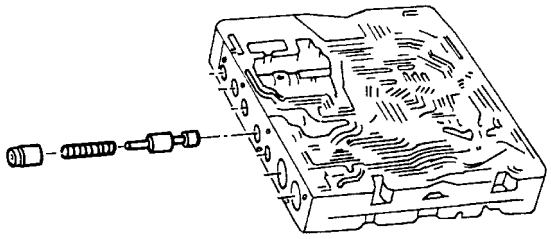

B103A278

5. Install the modulation pressure shuttle valve and the spring.

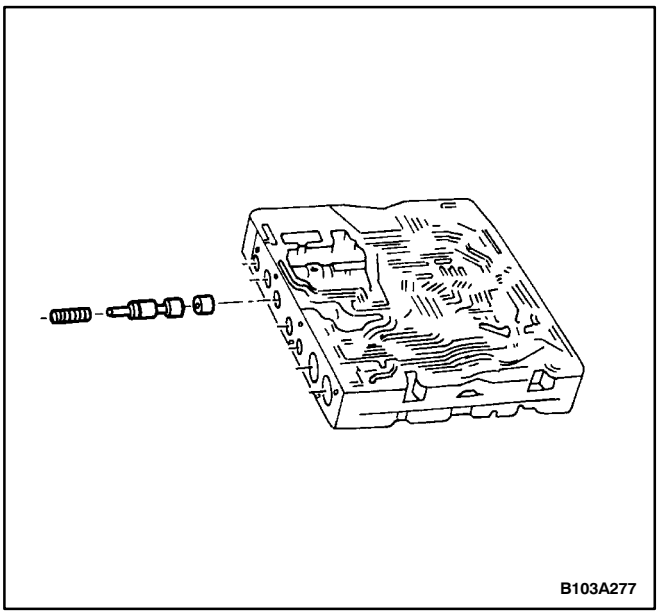

6. Install the 4-3 kickdown shuttle valve and the spring.

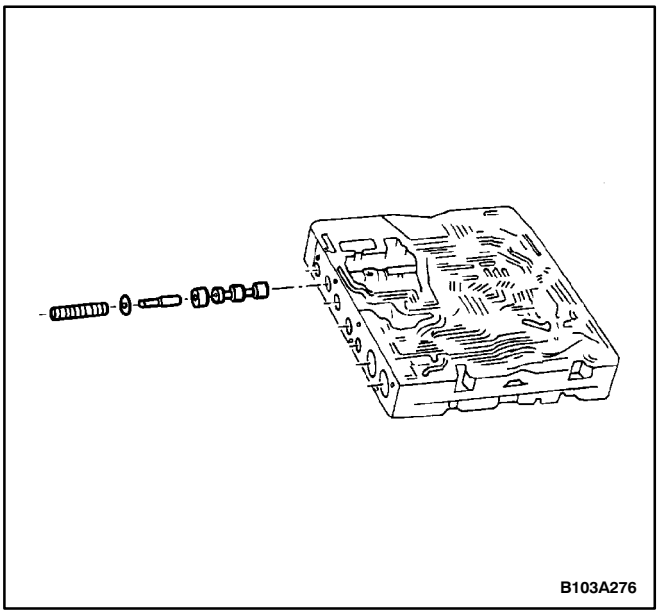

7. Install the 3-4 change shuttle valve and the spring.

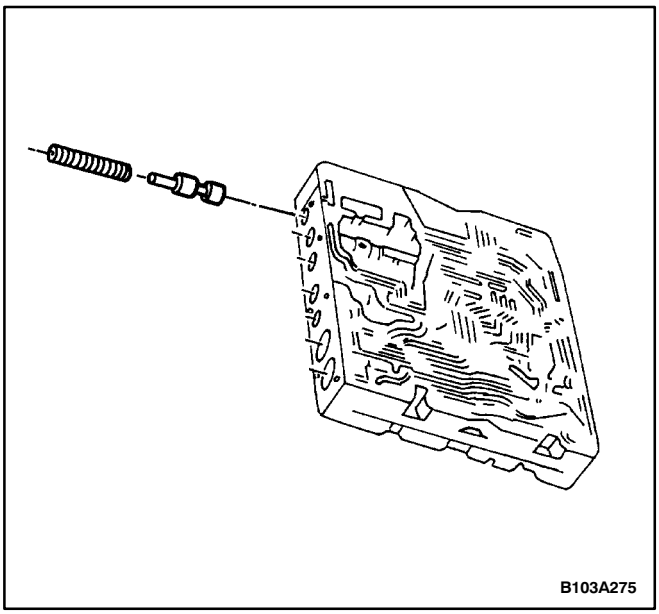

8. Install the 4-3 change shuttle valve and the spring.

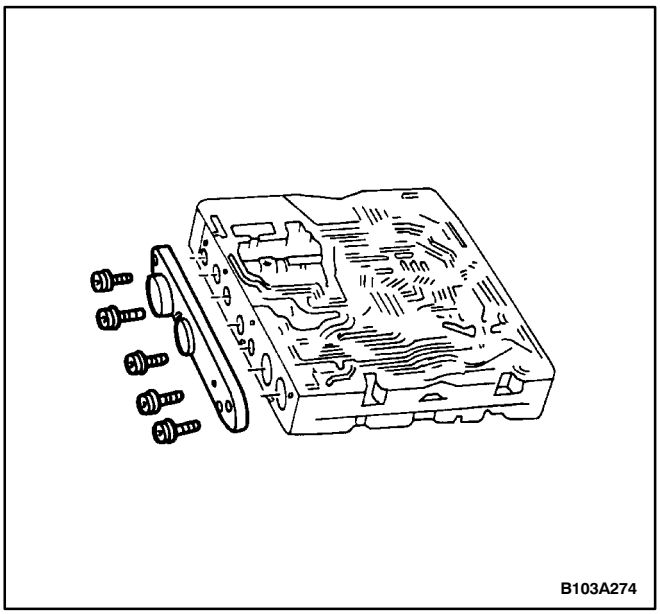

9. Install the valve housing control valve side cover with the bolts.

Tighten

Tighten the valve housing control valve side cover attachment bolts to 8 N•m (71 lb-in).

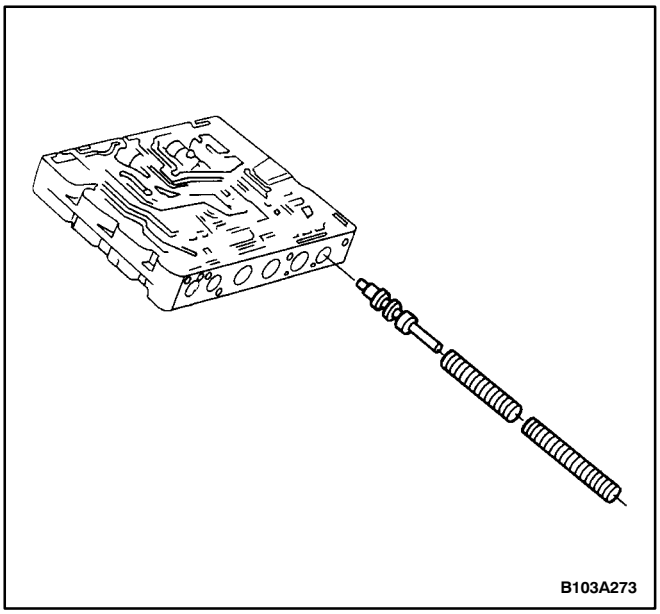

10. Install the main pressure shuttle valve and the main pressure shuttle valve inner and the outer spring.

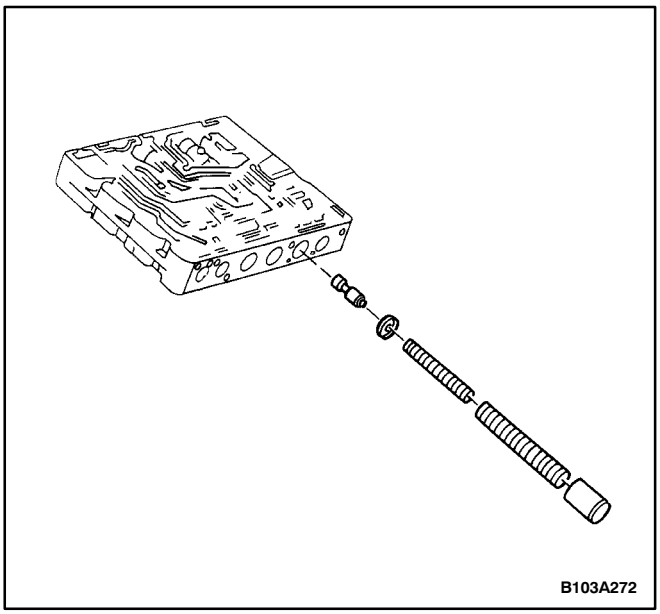

11. Install the clutch E shuttle valve and the clutch E shuttle valve inner and the outer spring.

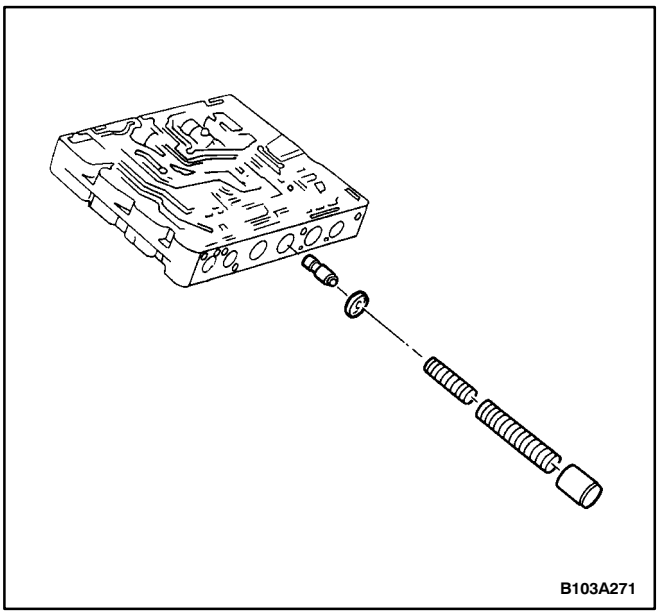

12. Install the brake C′ damper shuttle valve and the brake C′ damper shuttle valve inner and the outer spring.

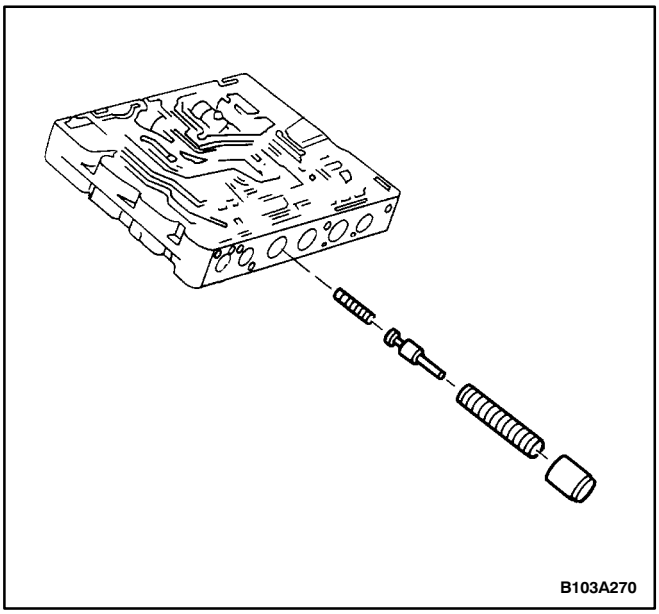

13. Install the delay shuttle valve and the delay shuttle valve inner and the outer spring.

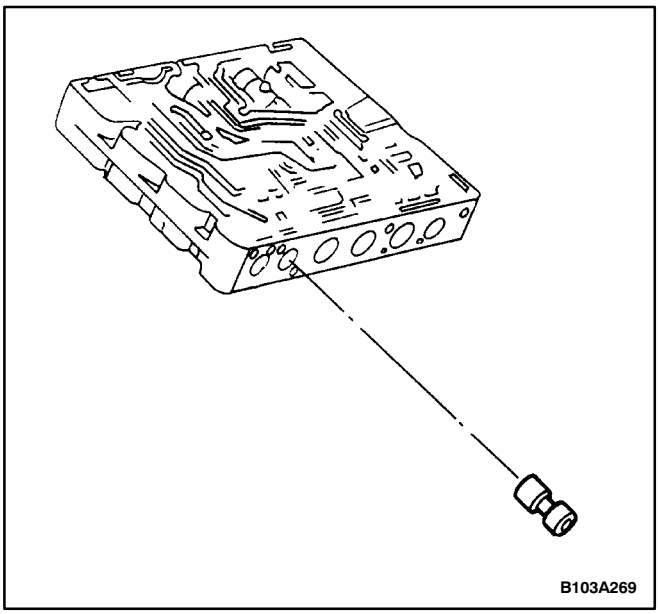

14. Install the 2-3 change valve.

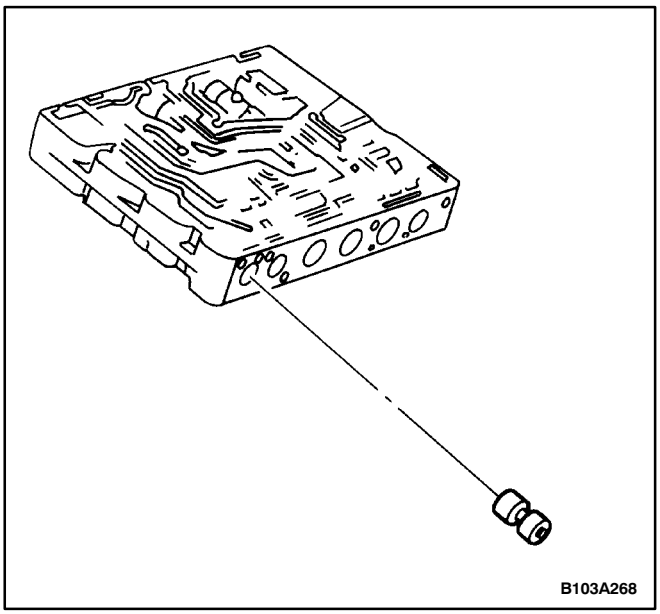

15. Install the 3-4 change valve.

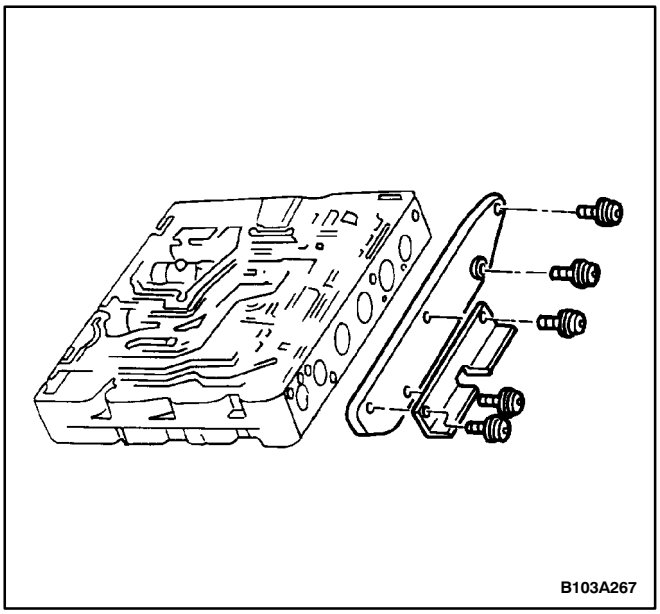

16. Install the valve housing damper valve side cover with the bolts.

Tighten

Tighten the valve housing damper valve side cover attachment bolts to 8 N•m (71 lb-in).

17. Install the valve housing. Refer to “Valve Body” in this section.
18. Install the valve body into the transaxle. Refer to “Major Component Assembly” in this section.
19. Install the transaxle into the vehicle. Refer to “Transaxle Assembly” in this section.

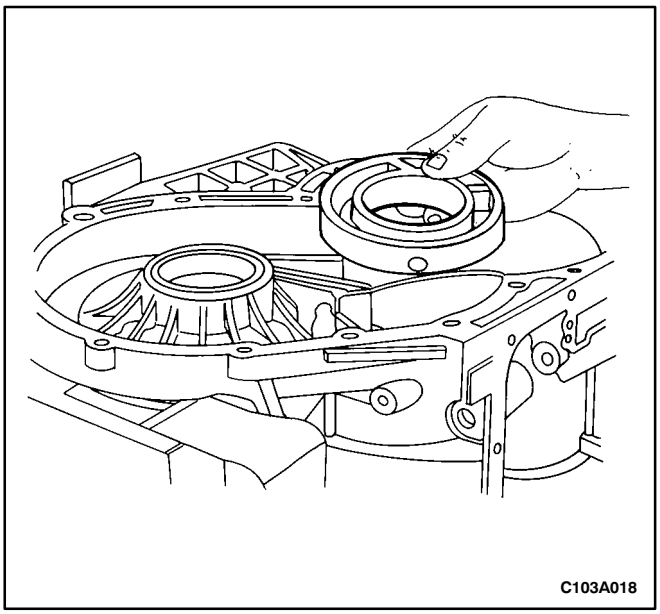

MAJOR COMPONENT ASSEMBLY

Tools Required

KA-002-088 (KA-088) Differential Adjustment Tool

KA-000-155 (KA-155) Grooved Nut Socket

KA-000-288 (KA-288) Side Shaft Retainer

KA-001-483 (KA-483) Axial Clearance Measurement Tool

KA-001-655 (KA-655) Spur Gear Clearance Measurement Tool

Assembly Procedure

1. Install the side shaft outer ring.

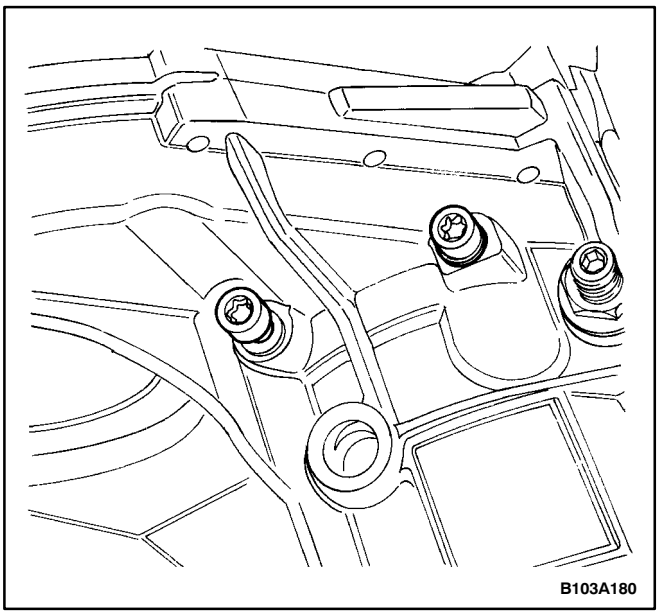

2. Install the side shaft outer ring securing bolts.

Tighten

Tighten the side shaft outer ring securing bolts to 20 N•m (15 lb-ft).

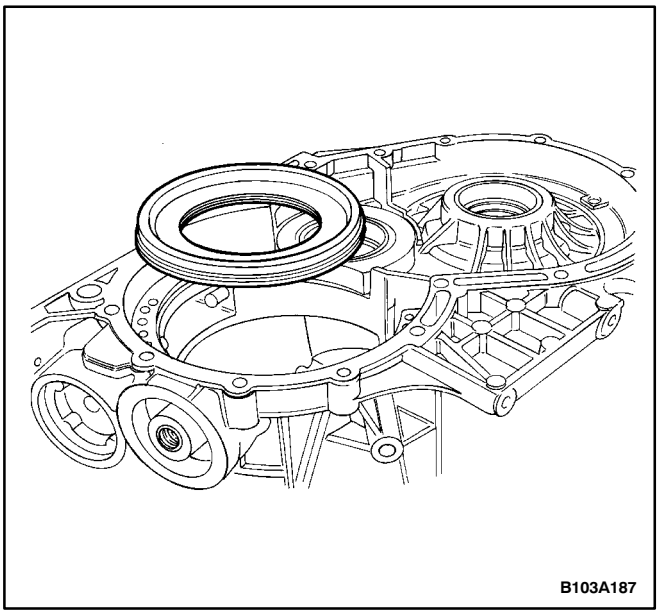

3. Lubricate the piston D seal with the transaxle fluid.
4. Install the piston D into the transaxle case.

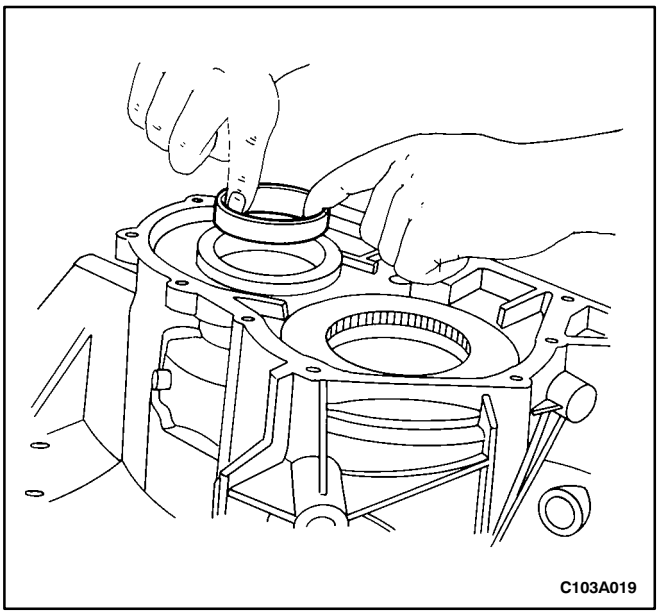

5. Rotate the transaxle 180 degrees so the side shaft access hole is in the UP position.

Important: Preheat the transaxle case to 70°C (158°F) to facilitate the installation of the small spur gear con bearing outer ring.

6. Install the small spur gear con bearing outer ring.

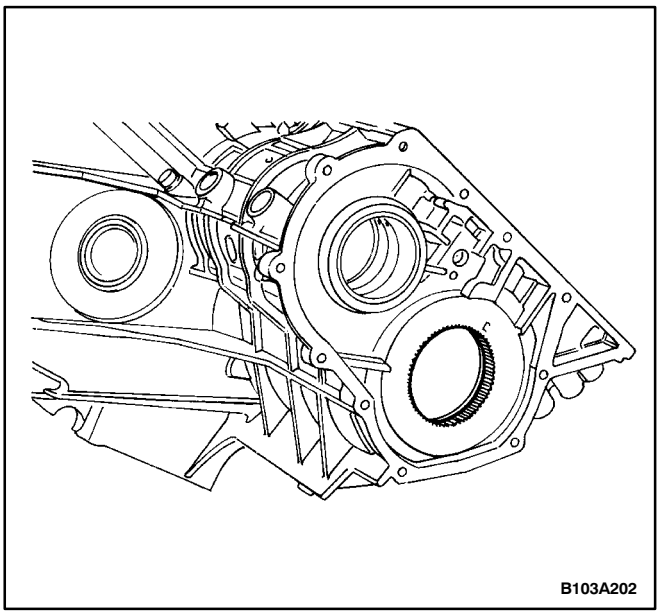

7. Rotate the transaxle 90 degrees so the PARK/LOCK components are in the UP position.
8. Fit the first freewheel into the teeth on the inside of the transaxle case.

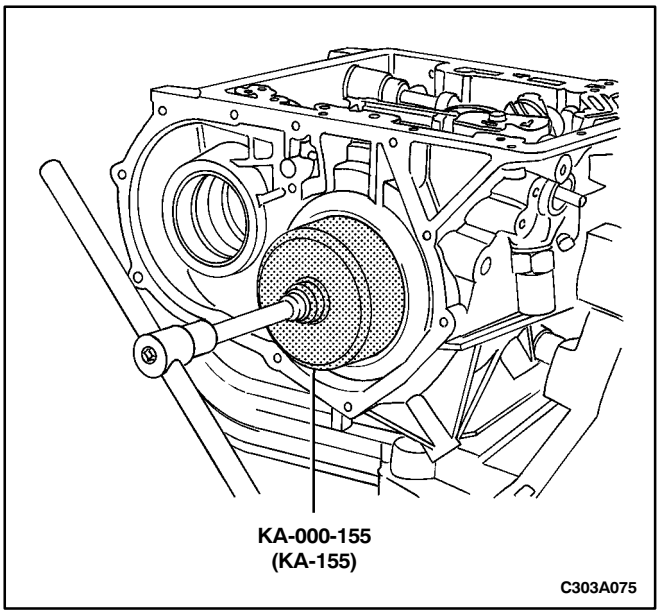

9. Install the security plate and the grooved nut onto the first freewheel using the grooved nut socket KA-000-155 (KA-155).

Tighten

Tighten the grooved nut to 50 N•m (37 ft-lb).

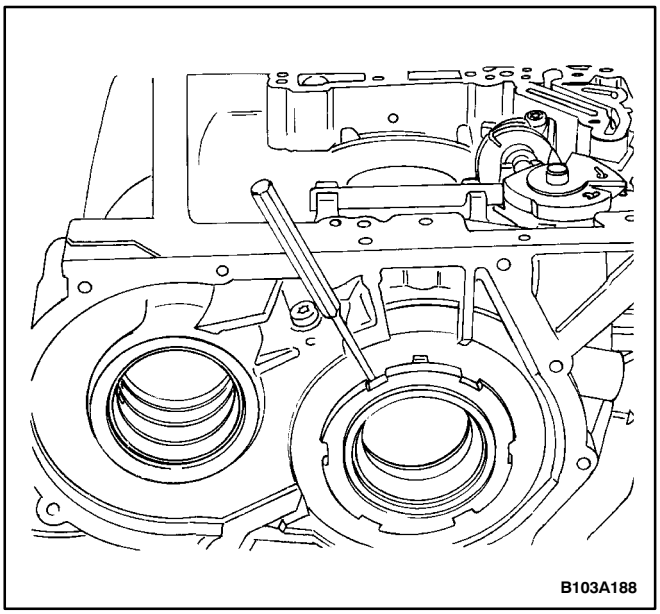

10. Using a punch, bend the tabs on the security plate to lock the grooved nut in place.

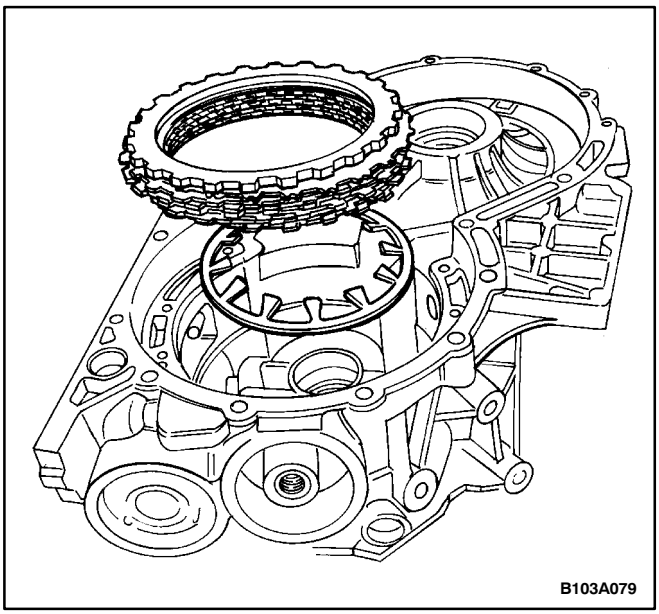

11. Rotate the transaxle 90 degrees so that the bell housing bolt holes are in the UP position.
12. Install the brake D assembly and the plate spring.

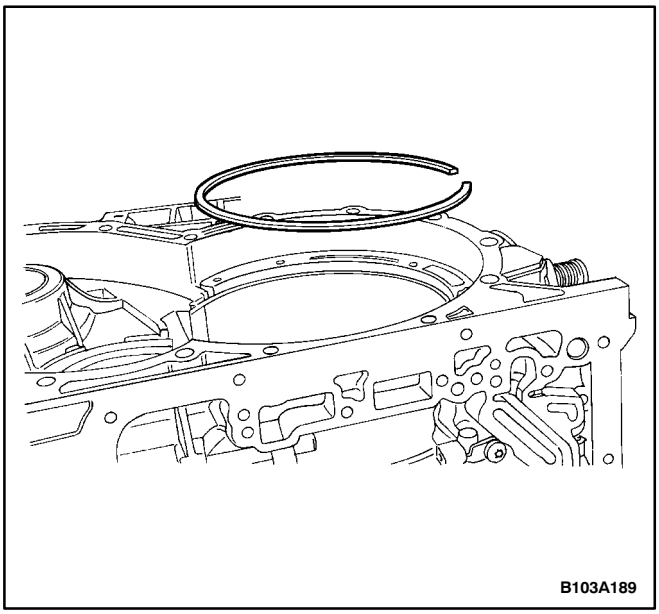

13. Install the snap ring into the case.

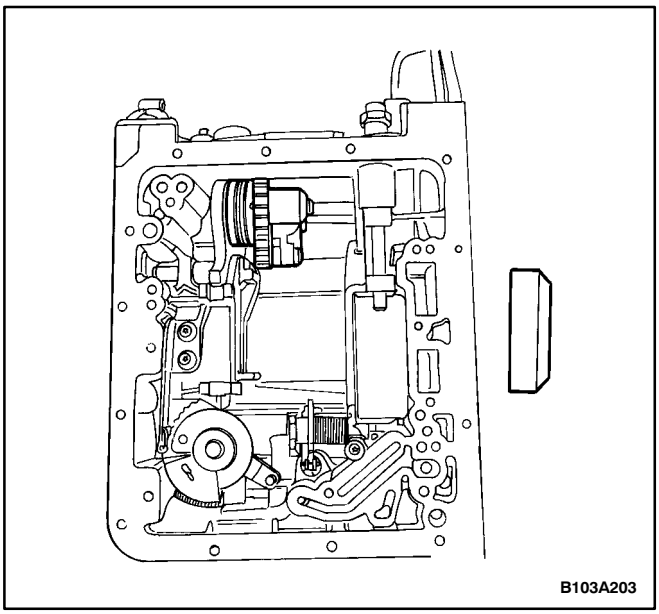

14. Rotate the transaxle 90 degrees so the PARK/LOCK components are in the UP position.
15. Install the governor and the cover plate.

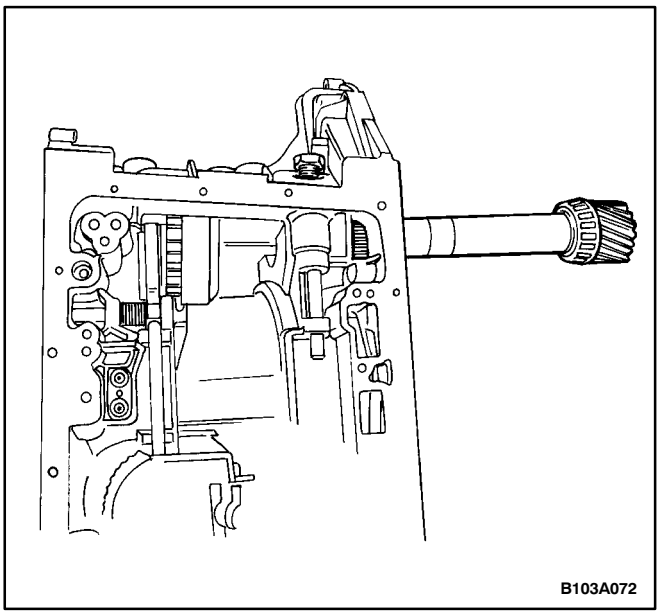

16. Install the side shaft.

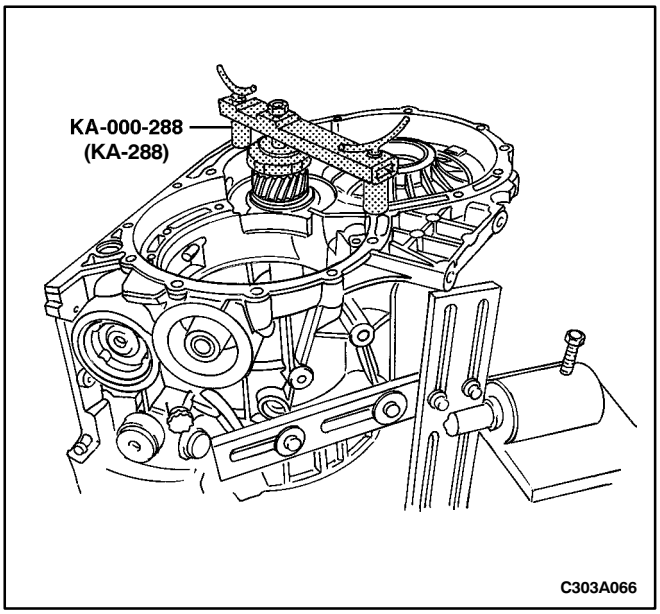

17. Use the side shaft retainer KA-000-288 (KA-288) to hold the side shaft in place.

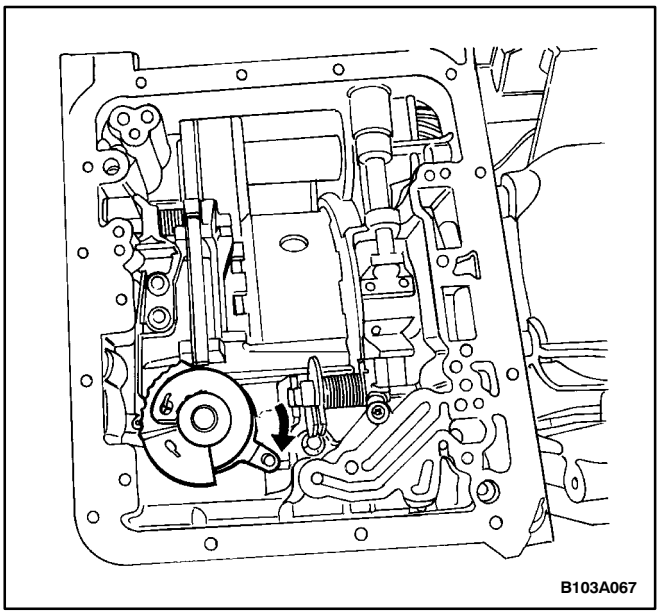

18. Make sure the gear selector is in the PARK position.

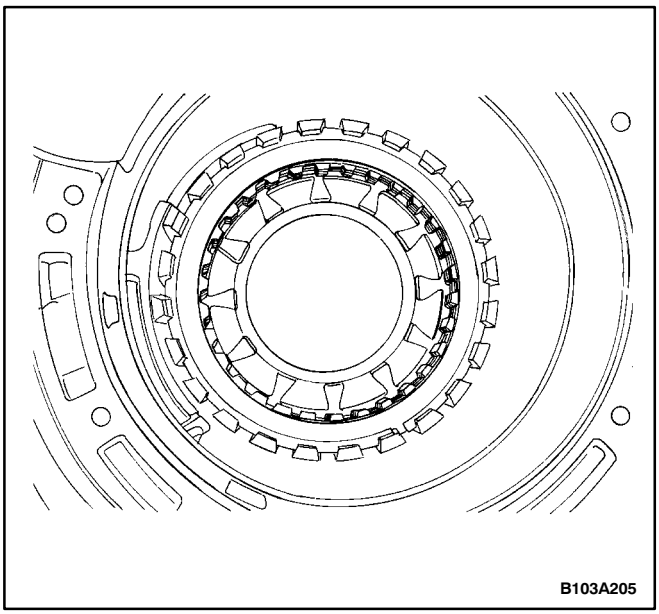

19. Align the brake D assembly rings.

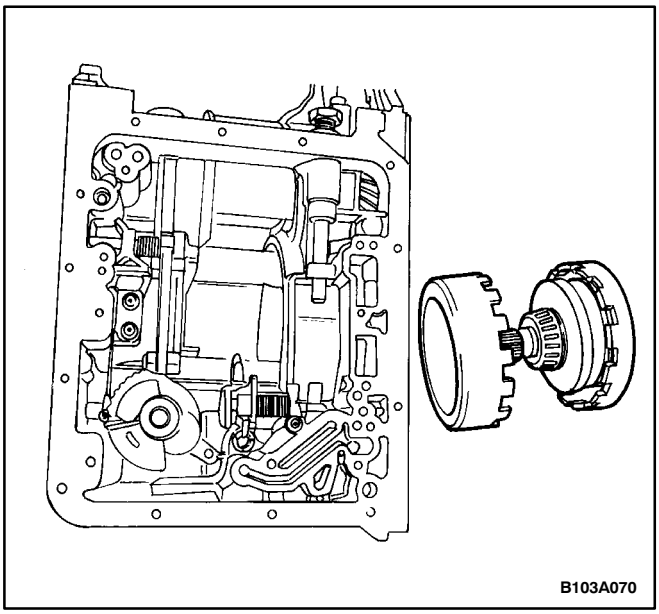

20. Install the web gear onto the outer ring of the freewheel. Install the output shaft/hollow gear assembly into the transaxle case.

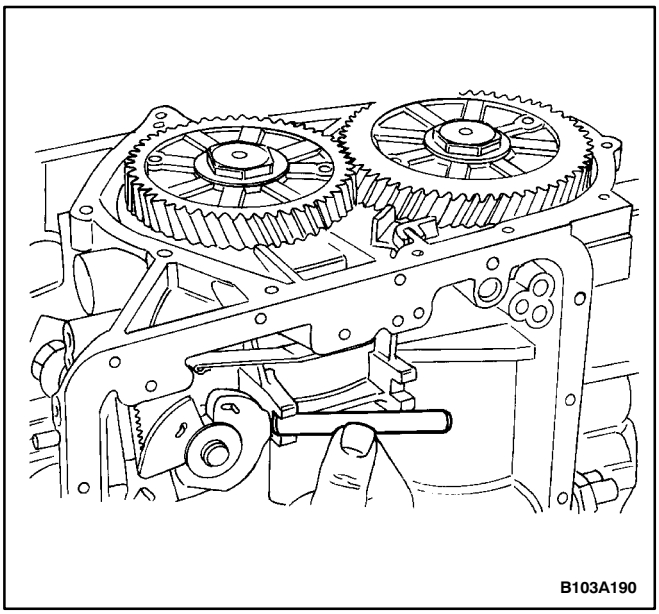

21. Install the large spur gear with a 1.75 mm (0.069 inch) washer under it and the securing bolt.
22. Install the small spur gear and the securing bolt.
23. Rotate the transaxle 90 degrees so the spur gears are in the UP position.

Tighten

Tighten the small spur gear securing bolt for its first torque to 10 N•m (89 lb-in).

24. Remove the connecting rod and rotate the gears more than three around.

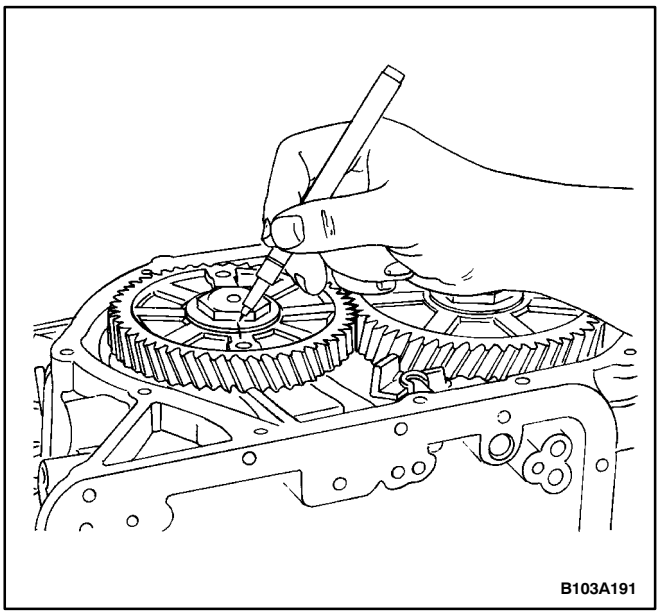

25. Insert the connecting rod.

Tighten

Tighten the small spur gear securing bolt for its second torque to 20 N•m (15 lb-ft).

26. Mark the bolt and the gear.

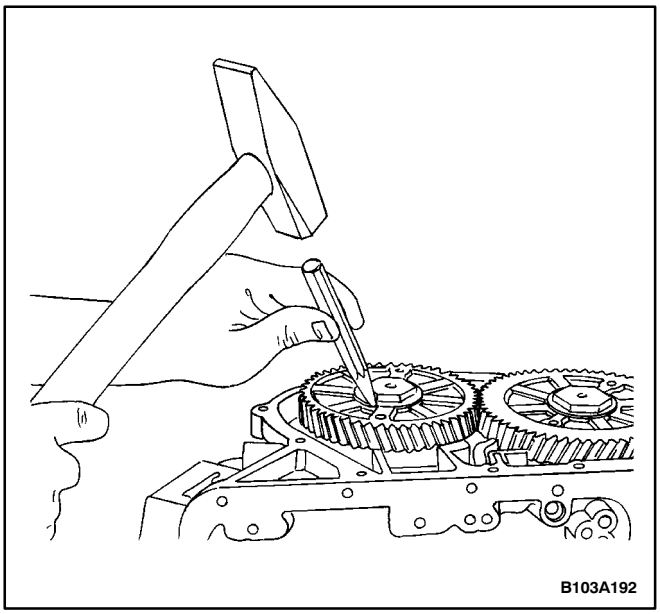

27. Turn the bolt 12 mm (0.5 inch) counterclockwise and bend the locking tabs on the securing bolt.

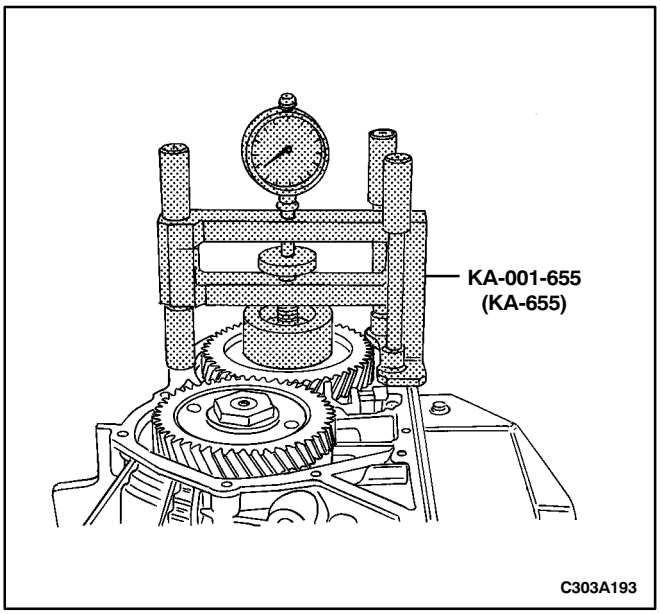

Tighten

Tighten the large spur gear securing bolt to 150 N•m (110 lb-ft).

28. Remove the connecting rod.
29. Install the spur gear clearance measurement tool KA-001-655 (KA-655).

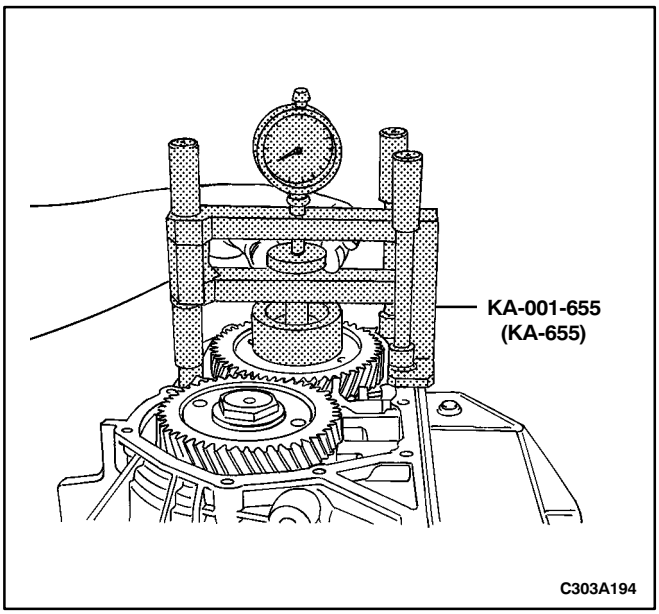

30. Turn the adjusting bolt down until the indicator of the gauge starts to move.

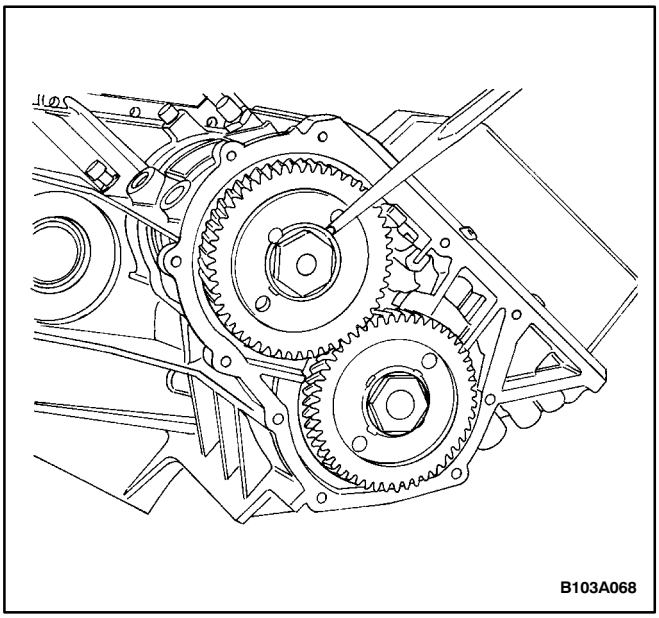

31. Turn the gears to bring the gauge back to point zero.
32. Remove the side shaft retainer KA-000-288 (KA-288) from the side shaft.
33. Turn the adjusting bolt 270 degrees counterclockwise, then turn the gears until the indicator on the gauge has been adjusted. Read the measurement (X) in millimeters.
34. Install the washer under the large spur gear. Determine the thickness of the washer (S) to be inserted under the large spur gear by the formula:
    S = 1.75 mm - (X mm - 0.06 mm), or S = 0.069 inch – (X inch - 0.002 inch).

Example: If the dial indicator measurement is 0.46 mm (0.018 inch), determine the washer thickness by subtracting 0.06 mm (0.002 inch) from 0.46 mm (0.018 inch) and then subtracting the difference from 1.75 mm (0.069 inch). In this case, S = 1.75 mm – (0.46 mm - 0.06 mm), i.e. S = 1.35 mm, or S = 0.069 inch – (0.018 inch - 0.002 inch), i.e. S = 0.052 inch. The washer thickness to be placed under the spur gear is equal to 1.35 mm (0.052 inch).

35. Remove the measuring device KA–001–655 (KA-655) and replace the washer under the large spur gear, if necessary.
36. Secure the spur gear bolt by bending the locking tabs.

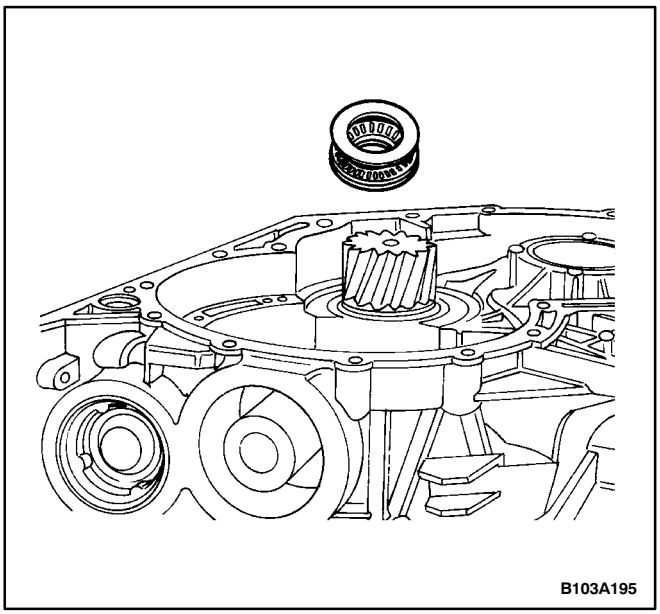

37. Install the side cover. Refer to “Case Side Cover Pan and Gasket” in this section.
38. Rotate the transaxle 180 degrees so the differential bearing race is on the top.
39. Install the washer, the axle cage, and the thrust washer.

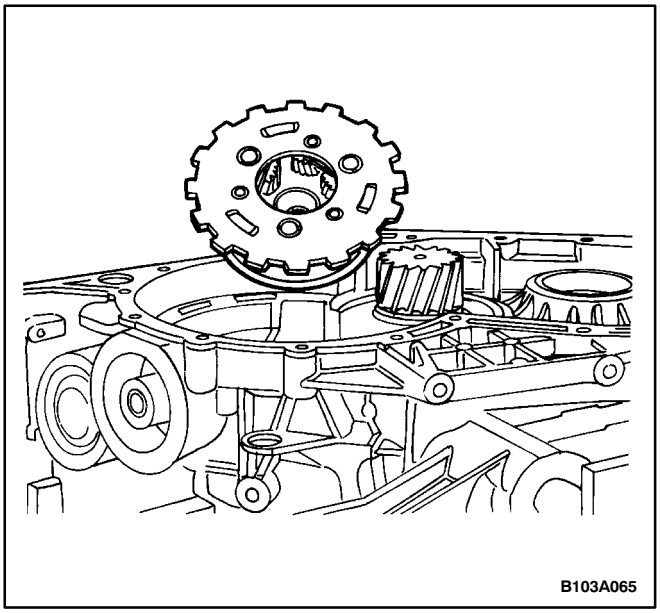

40. Install the planetary assembly into the housing case.

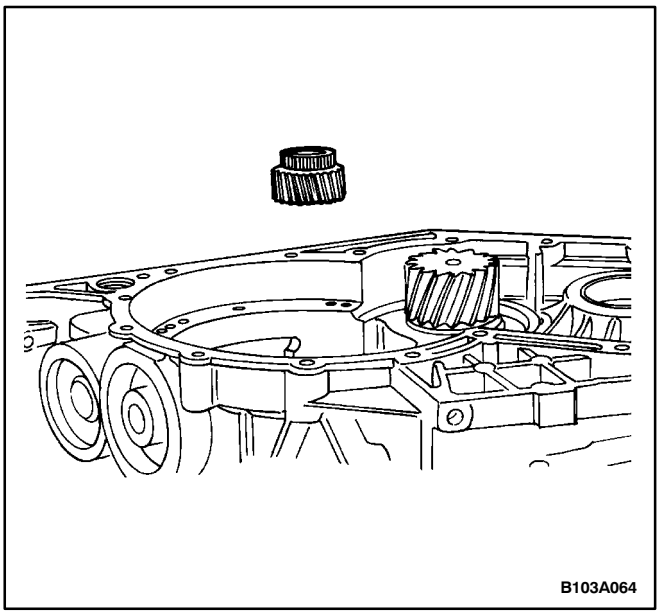

41. Install the sun gear into the planetary assembly.

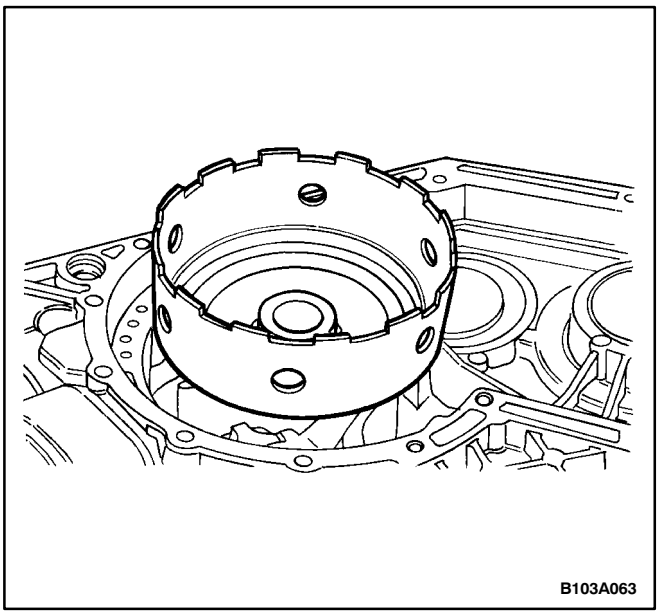

42. Install the inner teeth of the drive shell into the outer teeth of the sun gear.

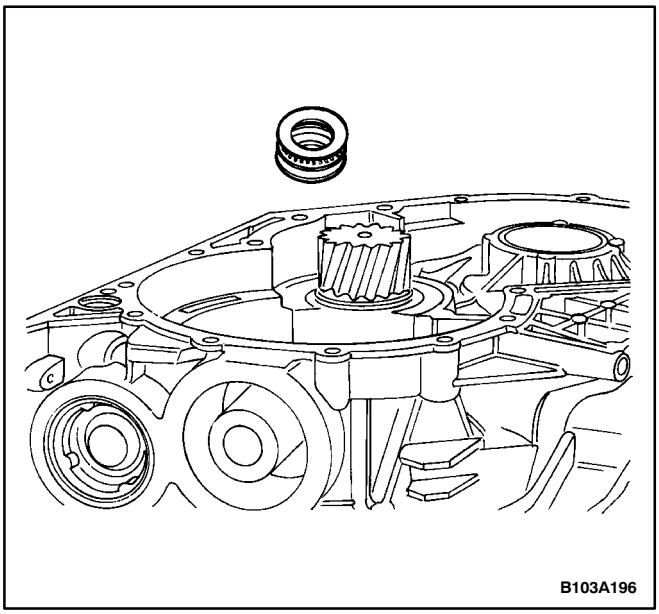

43. Install the washer, the thrust bearing, and the thin axle washer into the drive shell.

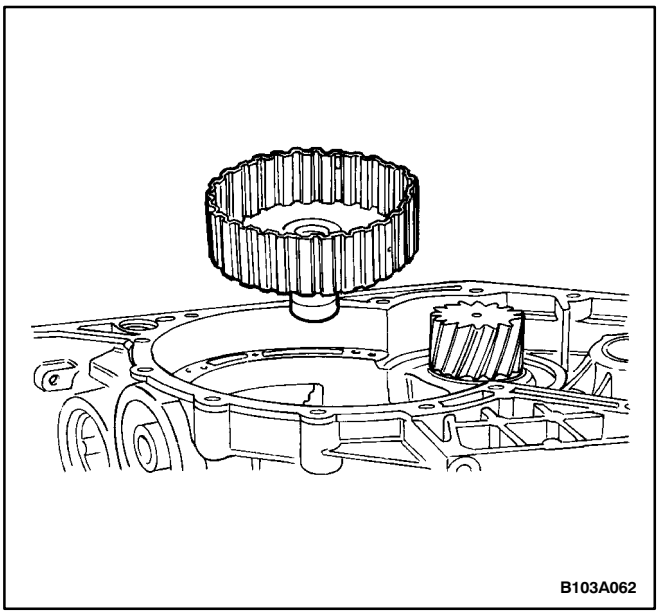

44. Install the sun gear shaft into the housing case.

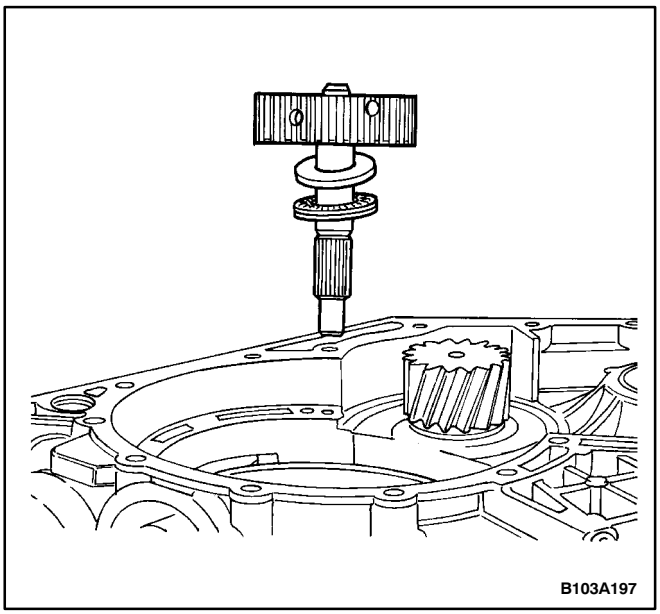

Important: If the sun gear assembly has been installed correctly, the drive shell will turn toward the sun gear in one direction only.

45. Install the washer, the axle cage, and the thrust washer onto the intermediate shaft and install the intermediate shaft assembly into the housing.

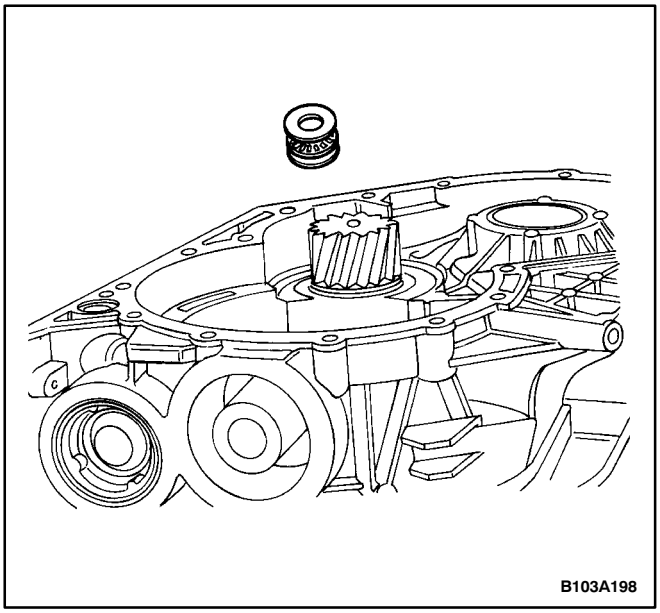

46. Install the washers and the axle cage onto the intermediate shaft.

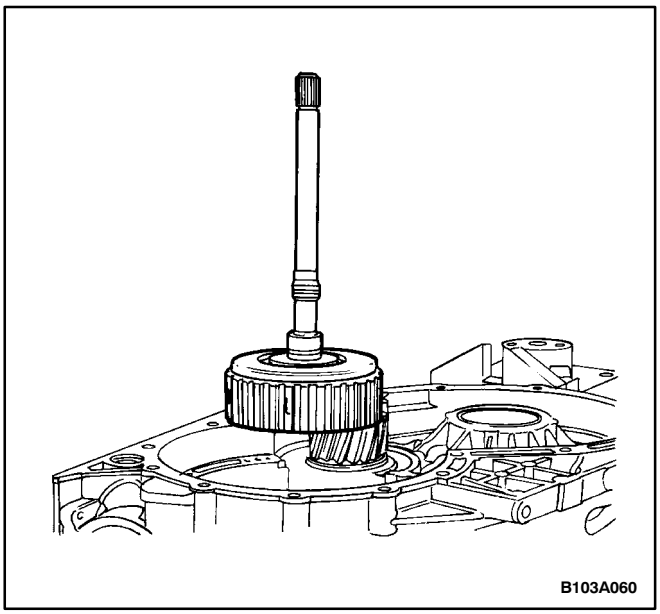

47. Install the motor shaft assembly into the case using a turning motion. The motor shaft is correctly installed when the cylinder E is aligned with the edge of the sun shaft carrier.

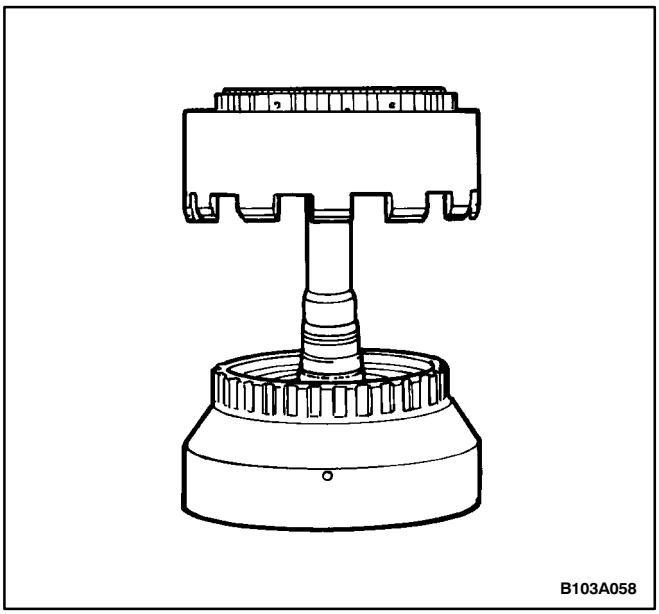

48. Join the clutch A and the clutch B.

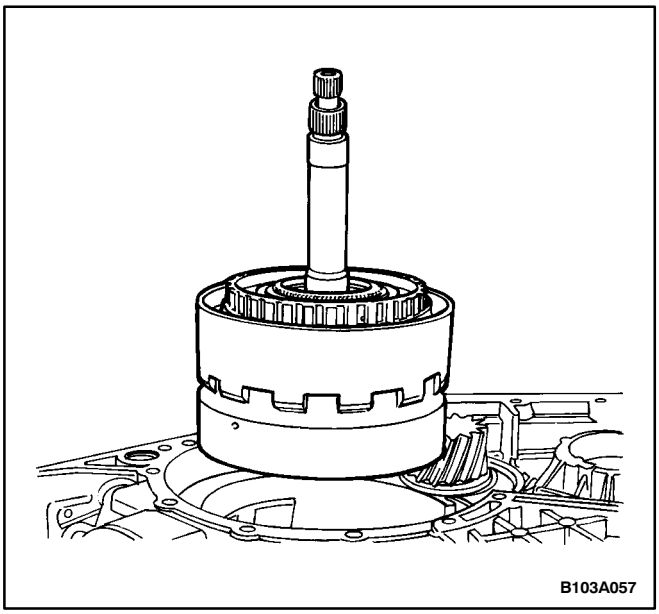

49. Install the clutch A and B assembly into the transaxle case using a twisting motion.

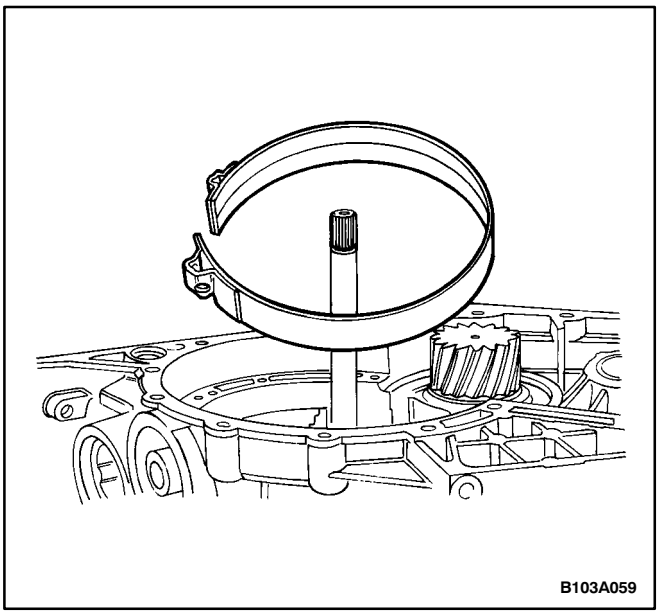

50. Install the band C′.

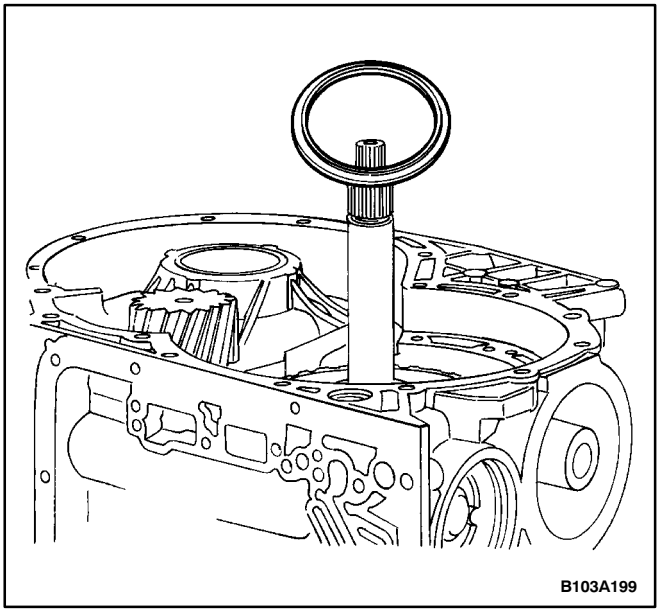

51. Install the holding ring on top of the security washer on the second freewheel.

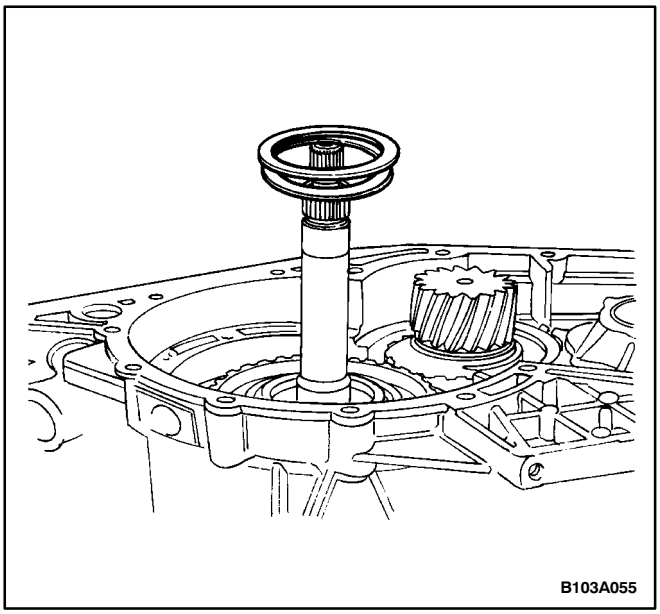

52. Install the adjustment washers and the thrust washer onto the motor shaft.

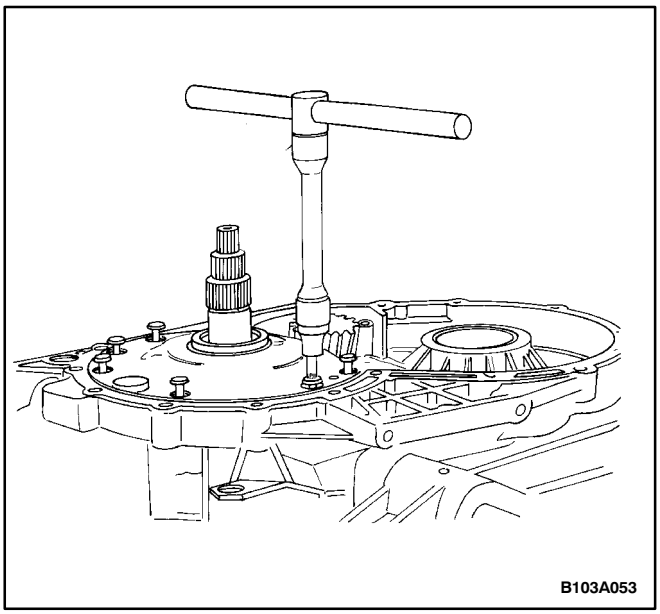

53. Install the pump assembly into the transaxle case with the bolts.

Tighten

Tighten the intermediate plate-to-housing bolts to 10 N•m (89 lb-in).

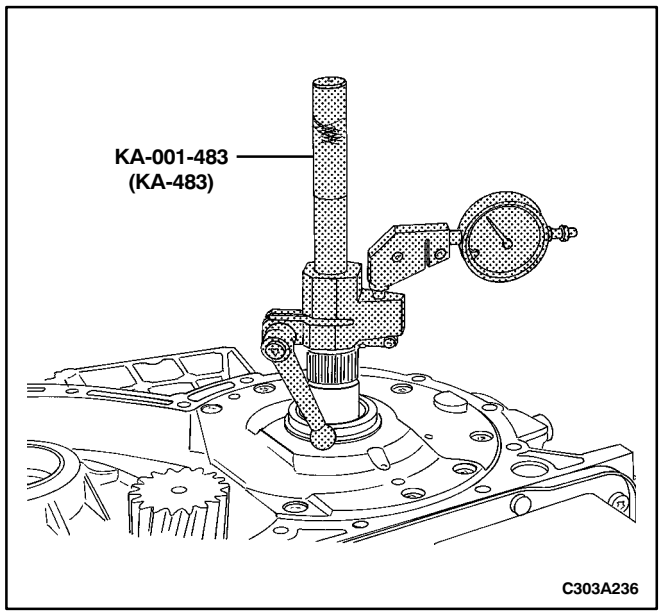

54. Install the axial clearance measurement tool KA-001-483 (KA-483).

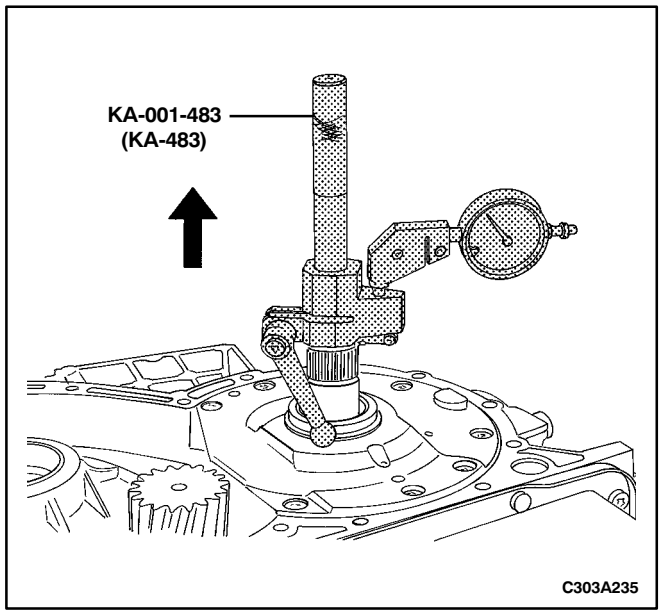

55. Place the indicator gauge at zero and pull up on the device.

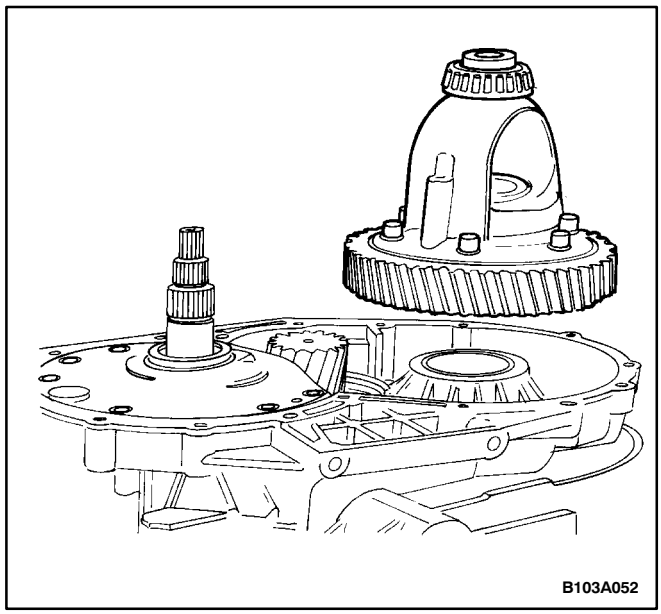

56. Clearance should be between 0.1 mm (0.004 inch) and 0.3 mm (0.01 inch). A thicker or thinner washer can be used to bring the clearance within tolerance.
57. Install the differential assembly into the transaxle housing.

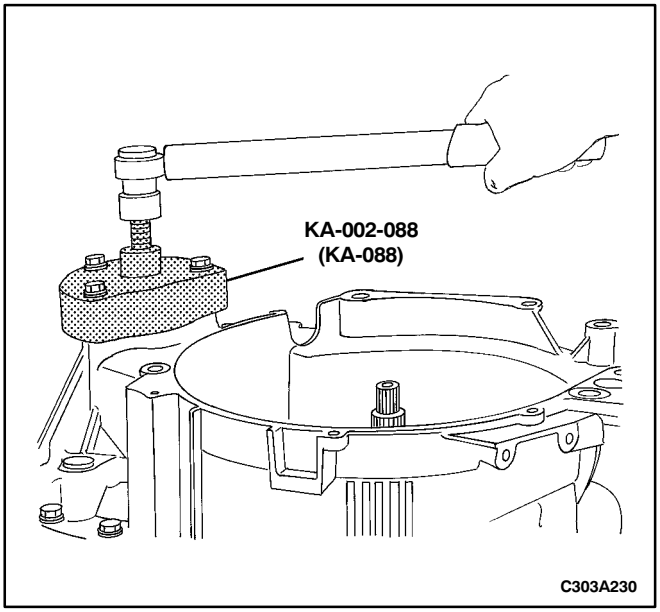

Important: Remove the valve body and the extension housing from the transaxle in order to adjust the differential.

58. Install the differential adjustment tool KA-002-088 (KA-088).

Tighten

Tighten the differential adjustment tool to 7 N•m (62 lb-in).

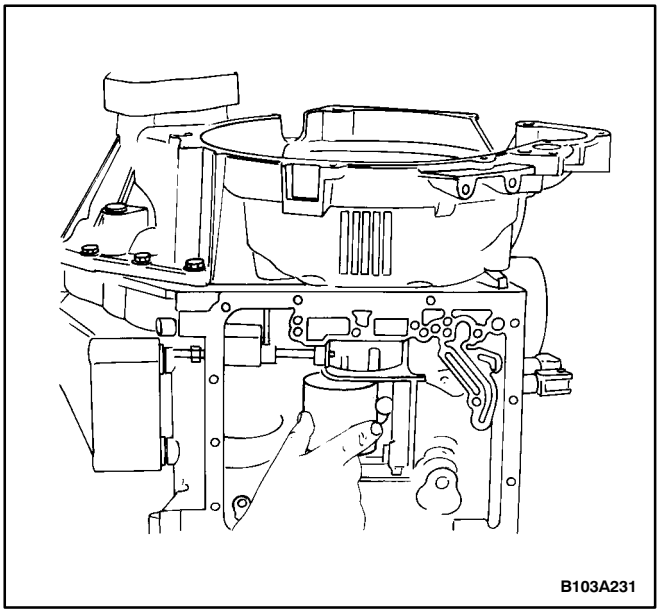

59. Turn the drive shell clockwise to settle the bearings. Check the torque again.

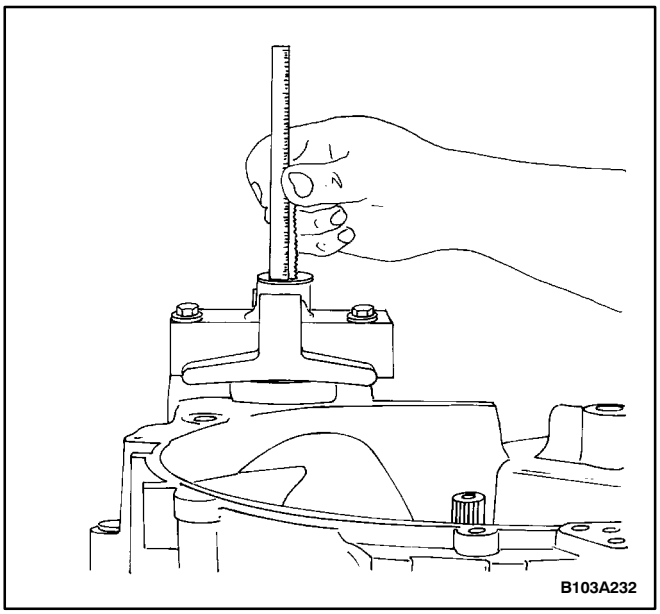

60. Use a depth gauge to determine the distance (A) between the bearing outer ring and the top of the bell housing.

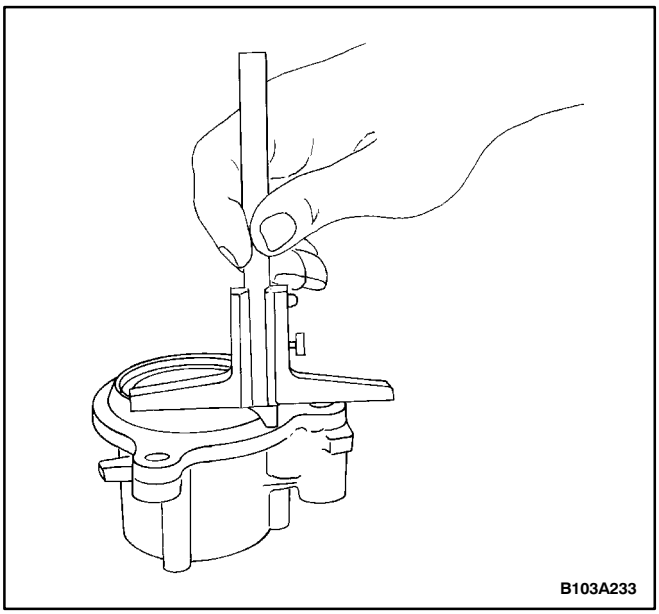

61. Use a depth gauge to determine the distance (B) between the top of the extension housing and the bolt flange.

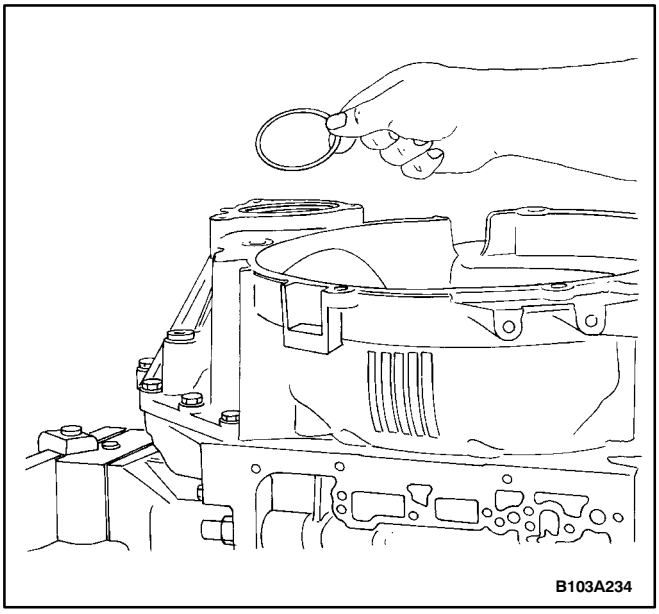

62. Depending on the measurement results, insert one or two washers between the top of the differential and the extension housing. Select different washer thicknesses to obtain the best result. The washer thickness (S) can be determined by the formula S=A-B+0.1 mm, or S=A-B+0.004 inch.

Example: The distance between the bearing outer ring and the top of the bell housing is 10.2 mm (0.40 inch). The distance between the top of the extension housing and the bolt flange is 8.65 mm (0.341 inch). The washer thickness can be determined by subtracting 8.65 mm (0.341 inch) from 10.2 mm (0.40 inch) and then adding 0.1 mm (0.004 inch). In this case, the washer thickness is equal to 1.65 mm (0.039 inch).

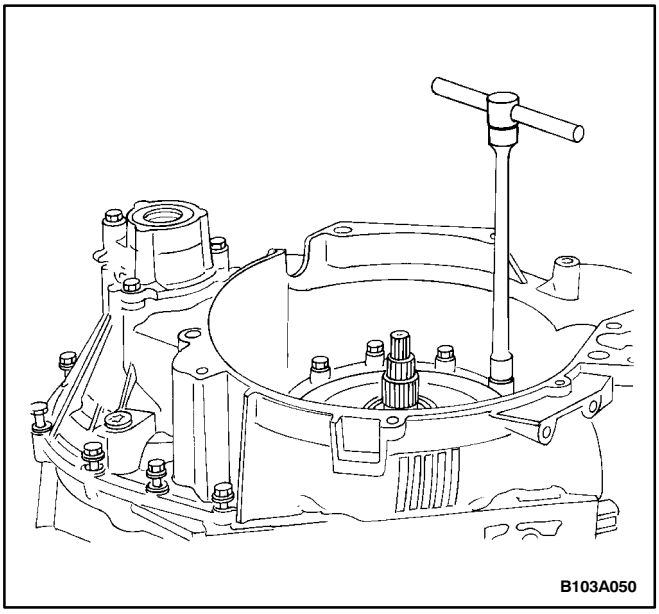

63. Install the gasket and the bell housing assembly with the bolts.

Tighten

Tighten the bell housing bolts to 23 N•m (17 lb-ft).

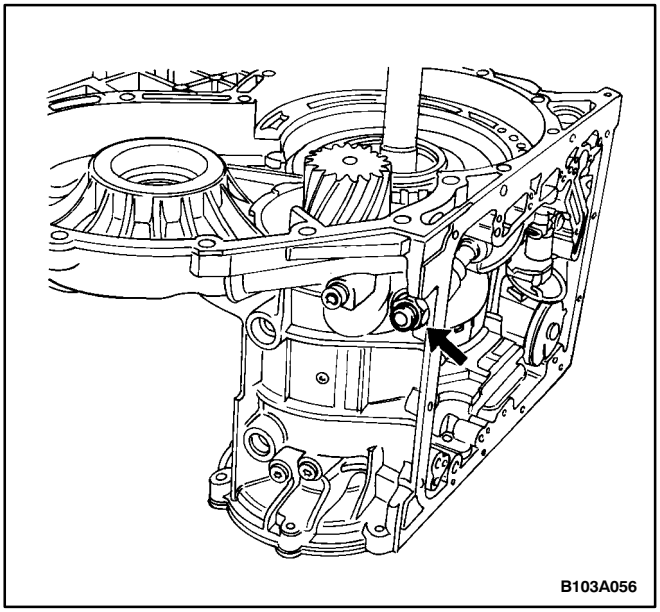

64. Lubricate the cylinder B with the transaxle fluid.

Tighten

Tighten the band C′ adjusting bolt to 10 N•m (89 lb-in).

Important: Turn the cylinder B while tightening the band to ensure correct settlement.

65. Turn the adjusting bolt counterclockwise 3 mm (0.1 inch).

IMPORTANT : The clearline between the adjusty bolt and band is 0.9mm ~ 1.2 mm.

Tighten

Tighten the band C′ locking nut to 80 N•m (59 lb-ft).

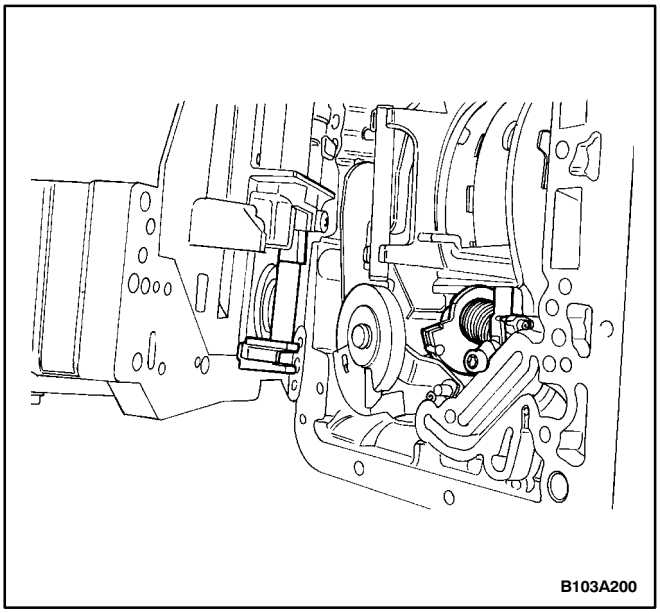

66. Rotate the transaxle 90 degrees so the PARK system components are in the UP position.
67. Install the valve body into the case, making sure the manual and throttle levers are positioned properly.

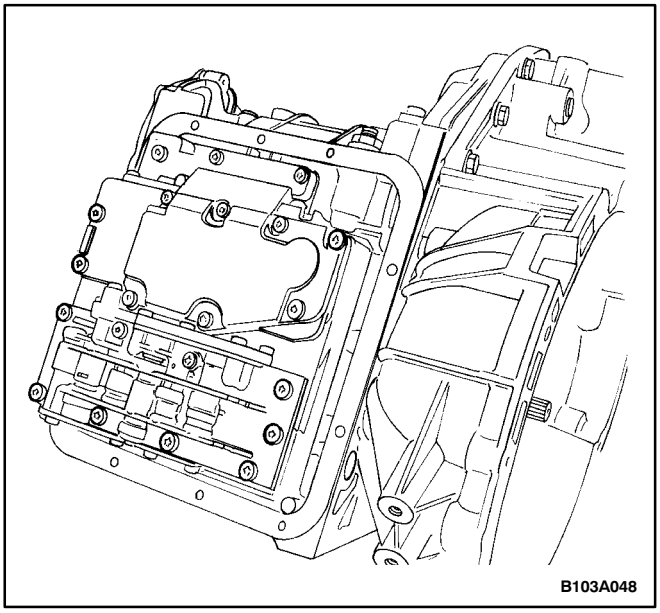

68. Install the valve body bolts.

Tighten

Tighten the valve body bolts to 8 N•m (71 lb-in).

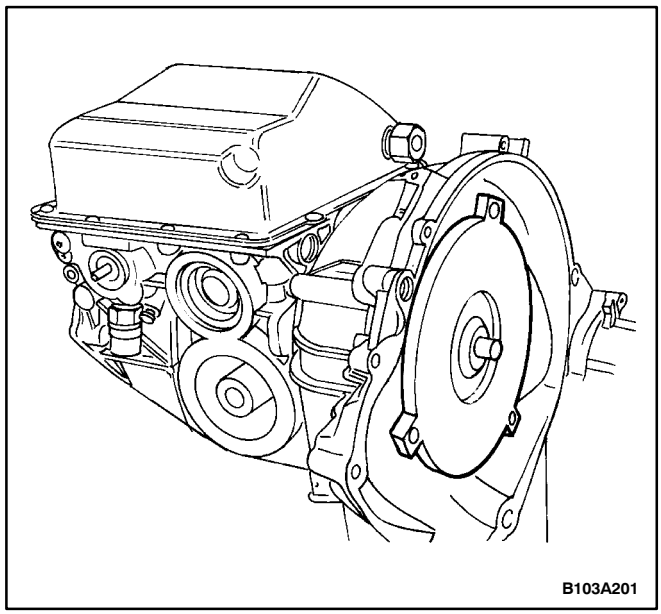

69. Install the fluid pan gasket and the fluid pan. Refer to “Pan and Gasket” in this section.
70. Install the torque converter assembly, making sure the converter engages the input shaft, the stator support, and the pump drive gear.
71. Install the transaxle in the vehicle. Refer to “Transaxle Assembly” in this section.

GENERAL DESCRIPTION AND SYSTEM OPERATION

ZF 4 HP 14 AUTOMATIC TRANSAXLE

The ZF 4 HP 14 is a four-speed automatic transaxle designed for cars with front-wheel drive and a transversely mounted engine. The transmission consists of a hydrodynamic, hydrokinetic torque converter with an integrated torsional damper and a four-speed planetary unit. Power transfer is transferred from two spur gear sets and a countershaft to the differential built into the transaxle housing.

In first, second and reverse gear, power is transferred from the engine to the gear box by the use of the torque converter. In third gear, the transaxle works according to the power-splitting principle. Approximately 40 percent of the input power is transmitted hydraulically through the torque converter. Approximately 60 percent of the input power is transmitted mechanically through the converter cover, the integrated torsional damper, and a shaft. In fourth gear, 100 percent of the power is transmitted mechanically through the converter cover, the integrated torsional damper, and a shaft.

The control elements used are hydraulically activated clutches or brakes and freewheel units.

A selector level controls the automatic transaxle. The hydraulically controlled shift points are dependent on the accelerator pedal position and the road speed of the vehicle.

TORQUE CONVERTER

The torque converter transmits power hydraulically from the engine to the transaxle and increases the input torque, particularly when the vehicle is pulling away.

The torque converter is connected to the turbine shaft.

The pump, the turbine, and the stator are contained in an enclosed housing which is completely filled with fluid under pressure. Rotation and power are transmitted by the kinetic energy of the flowing fluid. The torque converter sustains no wear, as there is no mechanical connection between the driving and the driven sections.

The engine-driver impeller induces the fluid to spin. Centrifugal force causes the fluid to flow outward toward the periphery of the impeller, causing the fluid to flow at a higher velocity to the turbine.

In the turbine, the kinetic energy of the fluid is converted to mechanical energy. The fluid then flows through the stator and deflects at an angle which is favorable to the impeller.

The stator is connected to the torque converter housing across the freewheel. By deflecting the fluid, the stators are subjected to torque which, in turn, causes an increase in the turbine torque. The input engine torque is thereby increased approximately twofold as the vehicle pulls away.

The relationship between the turbine torque and the impeller torque is known as the torque multiplication or conversion. The greater the speed difference between the impeller and the turbine, the greater the multiplication or conversion. Maximum torque multiplication is reached when the turbine is stationary. With an increase of the output shaft speed, torque multiplication or conversion decreases until it reaches a ratio of 1:1. The stator then rotates freely in the flowing fluid and the torque converter acts purely as a fluid-coupling device.

The torsional damper which is integrated into the converter minimizes the torsional oscillations and the load change shocks which occur in the third and the fourth gears because of the mechanical power transfer. The torsional damper is connected to the engine shaft which transmits the power mechanically between the engine and the transaxle.

FLUID PUMP

The fluid pump is located between the torque converter and the transaxle case and is driven directly by the torque converter. The pump sucks the fluid through a filter and delivers it to the main pressure regulator valve of the control system. Excess fluid flows back to the pump.

The fluid pump fulfills the following functions:

- Generates line pressure.
- Delivers fluid under pressure to the torque converter, thus preventing air bubbles in the fluid.
- Induces a flow of fluid through the torque converter in order to eliminate heat.
- Supplies fluid pressure to the hydraulic control system.
- Supplies fluid pressure to the shift components.
- Lubricates the transaxle with fluid.

PLANETARY GEARS

The ZF 4 HP 14 automatic transaxle is equipped with a Ravigneaux planetary gear set which consists of the following elements:

- Two sun gears of different sizes, each equipped with three planetary gears.
- One planet carrier.
- One annulus or ring gear.
- Different ratios are obtained by transmitting power through some gears in the planetary gear set while locking other gears.

Power to the drive shafts is always transmitted by means of the annulus, or the ring gear. Refer to “Power Flow” in this section.

CONTROL ELEMENTS

A freewheel consists of an outer ring and an inner ring with rollers or rockers, also known as sprags, fitted between them. A freewheel can transmit torque in one direction only and rotates freely in the opposite direction. The function of the freewheel is to achieve smooth, jerk-free gear shifting.

The ZF 4 HP 14 uses the sprag-type clutch for both the freewheel first gear, associated with the brake D, and the freewheel second gear, associated with the brake C.

Sprag-Type Freewheel

When the sprag type freewheel is in the rotation direction, the sprags are arranged between the inner and the outer rings so that the two rings can turn together easily.

When the sprag-type freewheel is in the locking direction, the asymmetrical sprags are located between the inner and the outer rings which are pushed into an upright position when the rings try to rotate in opposite directions. As a result, they lock between the inner and the outer rings, which prevents the rings from rotating in opposite directions.

The sprags are contained in a special retainer cage.

Plate Clutches and Brakes

These gear-shifting elements consist of the following parts:

- A cylinder.
- A piston.
- A plate set of inner, intermediate, and outer plates.
- The Belleville spring rings.

The gear-shifting elements are locked hydraulically by fluid pressure applied between the cylinder and the piston. When the pressure is reduced, the Belleville spring ring pushes the piston back to its original position.

The function of the gear-shifting elements is to carry out gear shifting under load. In this case the plate clutches A, B, and E transmit the engine power to the planetary gear set. The plate disk brakes C and D serve as supports for the planetary gear set elements in the transaxle case.

Because of the hydraulic operation and the continuous lubrication, energy is transmitted virtually without wear. The gear-shifting elements are not subjected to mechanical wear and require no periodic adjustment.

Brake Bands

A hydraulic piston activates Brake band C and acts via the cylinder B and the drum as a brake for sun gear 1.

This brake band is unusual in that it sustains no wear and, therefore, needs no periodic adjustment.

Brake Band	First Gear	Sec-ond Gear	Third Gear	Fourth Gear	Reverse
Clutch A	a	a	a	–	–
Clutch B	–	–	–	–	a
Brake C	–	a	b	b	–
Brake Band C	–	a	–	a	–
Brake D	a	–	–	–	a
Clutch E	–	–	a	a	–
Free-wheel First	a	–	–	–	–
Free-wheel Second	–	a	–	–	–

a = Power Transmitting Elements

b = Elements in Waiting Position

POWER FLOW

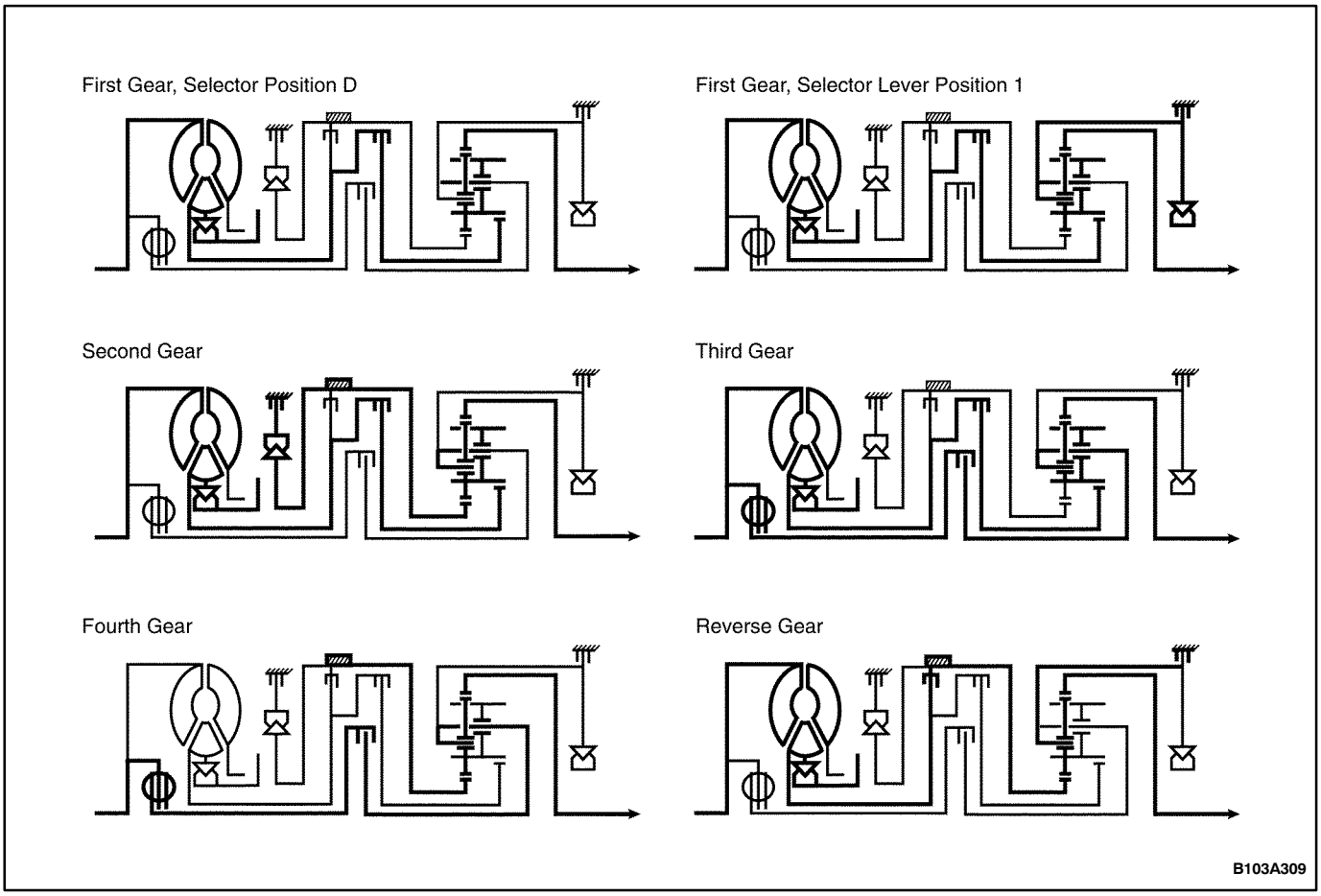

First Gear, Position D

Power is transmitted through the torque converter turbine and the turbine shaft to the clutch A. This drives the sun gear 2 via the sun gear shaft.

The freewheel first gear locks the planet carrier in counterclockwise rotation.

The sun gear 2 drives the planet gear 2, which drives the planet gear 1. These, in turn, drive the ring gear which is connected to the output shaft.

First Gear, Position 1

The brake D is now also applied. The planet carrier is locked. The overrun braking will be obtained when the accelerator pedal is released.

Second Gear

Power is transmitted through the torque converter turbine and the turbine shaft to the clutch A. This drives the sun gear 2 via the sun gear shaft.

The sun gear 1 is locked by the brake C and the brake band C.

The freewheel second gear is in the traction position.

The planetary gear 2 drives the planetary gear 1, which rolls on the stationary sun gear 1. The power flow then continues, as in the first gear, through the ring gear.

Third Gear

Approximately 40 percent of the power is transmitted hydraulically between the engine and the transaxle.

Power is transmitted through the torque converter turbine and the turbine shaft to the clutch A. This drives the sun gear 2 via the sun gear shaft.

Approximately 60 percent of the power is transmitted mechanically between the engine and the transaxle.

Power is transmitted through the engine shaft to the applied clutch E. The inner clutch plate disk holder E is meshed with the planet carrier.

As the sun gear 2 and the planet carrier are driven simultaneously, the ratio of the planetary gear set is 1:1. The output shaft is driven via the annulus.

Fourth Gear

Power is transmitted through the engine shaft and the clutch E to the planet carrier. The sun gear 1 is locked by the drum of the brake band C. The planet gear 1 thus runs on the sun gear 1 and drives the output shaft via the annulus.

Reverse Gear

The clutch B is applied and transmits power from the turbine shaft, through the drum to the sun gear 1.

The clutch D is applied and locks the planet carrier. As a result, the planet gear 1 reverses the direction of rotation between the sun gear 1 and the annulus, which now drives the output shaft counterclockwise.

PARKING BRAKE

The parking brake is applied when the selector lever is moved to position P. The parking brake acts as a mechanical latch which prevents the vehicle from rolling away.

The parking safety pawl engages the teeth of the parking interlocking gear which is connected to the side shaft of the transaxle. This locks the driving wheels of the vehicle.

When the selector lever is in position P, a pre-loading spring ensures that the parking pawl engages the interlock gear as soon as the car starts to roll.

A locking cone prevents inadvertent release of the parking pawl, even if the vehicle has a heavy trailer hitched to it and is parked on a steep grade.

The parking pawl cannot be engaged inadvertently. At high speeds, it slides over the top of the parking gear teeth. It can be engaged only at lower speeds.

Position P should only be selected when the vehicle is stationary. The parking pawl would be subjected to excessive stress if it were engaged while the vehicle was moving.

HYDRAULIC CONTROL SYSTEM

The hydraulic control system is affected by the following:

- The selector lever position or the line pressure.
- The accelerator pedal position or the throttle pressure.
- The speed of the vehicle or the governor pressure.

Selector Valve

The selector valve routes the fluid flow, depending on the selector lever setting, from the line pressure valve through the shift and the lockup valves, to the clutches, and to the brakes.

Line Pressure Regulator Valve

The line pressure regulator valve opens when the pressure rises to a certain value, thus returning the fluid back to the suction side of the pump. This valve acts as a variable pressure-limiting valve and operates relative to the modulator.

The line pressure controls the system pressure in the valve body. The modulator pressure, the throttle pressure, the governor pressure, and the torque converter pressure are all generated from the line pressure.

Lubrication Valve

Fluid flows from the torque converter through the lubrication valve into the transaxle case.

Torque Converter Pressure Relief Valve

The torque converter pressure relief valve limits the fluid pressure in the torque converter.

Modulator Valve

The modulator pressure simulates the engine torque, to which the gear shifting, carried out by the control elements, must be adjusted.

At low engine torque, the closing pressure for engaging the control elements is low.

At high engine torque, the closing pressure is high. Since the engine torque may be high even at low engine speeds, the function of the modulator pressure is to boost the closing pressure in the control elements during this stage.

The modulator valve operates in three stages.

Stage One

The accelerator pedal is pressed. The modulator valve adjusts the pressure relative to the throttle pressure.

Stage Two

Since pressure boosting is no longer required, the modulator valve serves as a pressure-reducing valve and thus maintains a constant pressure. The modulator valve spring determines the level of this pressure. This stage starts only when the modulator valve piston reaches the STOP in the passage.

Stage Three

At a suitable ignition setting, the modulator pressure can be reduced on kickdown.

Throttle Pressure Valve

The throttle pressure valve is a pressure-reducing valve which adjusts the throttle pressure relative to the following accelerator pedal positions.

Idling Position

The accelerator pedal is not pressed. The throttle pressure valve piston is in its starting position, but there is not yet any throttle pressure.

Part-Throttle Position

The accelerator pedal is slightly pressed. This stage exists from the idling position until the throttle pressure valve piston has reached passage 1 to generate the throttle pressure.

Full-Throttle Position

The accelerator pedal is pressed to the full-throttle position and the throttle cam is moved to the kickdown position. This stage exists from the point at which the passage 1 opens until the throttle pressure valve piston has reached the passage 2.

Kickdown Position

The accelerator pedal is pressed past the full-throttle position and the throttle cam is moved past the kickdown position. The passage 2 is open in this stage.

Shift Valves

There is a shift valve for each gear-shifting stage. These shift valves initiate upshift (1-2, 2-3, 3-4) or downshift (4-3, 3-2, 2-1) by exposing or closing the valve body passages used for routing the fluid pressure to the control elements. This takes place when the valves change over from the position 1 to the position 2 in response to the incoming signals from the line pressure, the governor pressure, or the throttle pressure.

Accumulators

The accumulators prevent the control elements from being subjected to fluid pressure surges. They also ensure a smooth pressure rise which prevents jerky gear shifting.

Accumulators With Clutch Valves

The accelerator pedal position or the engine torque controls the performance of these dampers. They employ the modulated pressure. The clutch valve acts as a variable pressure-reducing valve and controls the clutch pressure during the gear shifting.

Volume Accumulators

These accumulators are operational regardless of the pressure. They are not subjected to the modulated pressure. Damping is carried out only by means of a spring.

First and Reverse Lockup Valve

The first and reverse lockup valve has two functions:

1. It prevents shifting into reverse above a certain speed and blocks the fluid supply to the clutch B and the brake D. The governor pressure and the line pressure control this valve function.
2. In selector lever position 1, it prevents an upshift to the second gear by applying the line pressure to the 1-2 shift valve, which is thus blocked in the first position.

The valve prevents a manual downshift from the position 2 to the position 1 above a certain road speed by blocking the fluid supply to the brake D.

Second Lockup Valve

In the selector lever position 2, the second lockup valve prevents an upshift from the second gear to the third gear by applying the line pressure to the 2-3 shift valve which is thus locked in the position 2.

On a manual downshift from the third gear to the second gear, the second lockup valve prevents a downshift to the second gear above a certain road speed by blocking the fluid supply to the brake C.

2-3-4 Upshift Sequencing Valve

The 2-3-4 valve ensures a sequential 2-3-4 upshift by releasing the governor pressure to the 3-4 valve after the third gear is engaged. An upshift from the second gear to the fourth gear cannot take place because of the clutch A-to-the brake C overlap.

4-3-2 Valve

The 4-3-2 valve ensures a sequential 4-3-2 downshift by applying the line pressure to the 2-3 shift valve and maintaining the 3 position until the third gear has actually been engaged. A downshift from the fourth gear to the second gear cannot take place because of the clutch A-to-the brake C overlap.

3-4 Traction Valve

The 3-4 traction valve operates in the fourth gear as a shift valve for the line pressure supply to the clutch A. On a 3-4 upshift, the clutch A is vented through this valve. The venting takes place only when the brake C is capable of transmitting the engine torque.

4-3 Traction Valve

The 4-3 traction valve serves as the supply valve for the accumulator A. Its function is to prefill the clutch A on a 4-3 downshift.

4-3 Downshift Valve

The 4-3 downshift valve serves as a clutch pressure-retaining valve for the brake C until the clutch A has been filled. The brake C is also vented through the 4-3 downshift valve.

Time Control Valve

On overlap control, the time control valve regulates the delay time between the clutch being released and the clutch being applied. The delay time corresponds to the operating time of the accumulator at the time control valve. The time control valve disconnects the 4-3 traction valve and the 4-3 downshift valve.

Orifice Control

The orifice control valve senses the engine load and controls the pressure supply to the time control valve and to the brake C through a shorter or a longer operating time.

CENTRIFUGAL GOVERNOR

The centrifugal governor is mounted in the side shaft of the gearbox and serves as a sensor for the road speed of the vehicle. The rotation speed is converted to a speed-dependent pressure signal which is supplied to the hydraulic control unit.

Three-Stage Governor

Stage 1

The line pressure is supplied unchanged through the stage 3-2 valve to the stage 1 valve. The valve in the stage 1 is opened by a centrifugal force. The pressure on the differential area of the valve counteracts the centrifugal force, thus reducing the line pressure to the governor pressure.

Stage 2

Above a certain speed, the value for the stage 1 is moved fully outward by the centrifugal force. This provides a free flow path. The line pressure increases with the rotation speed and presses the valve for the stage 2 inward against the centrifugal force and the spring force, thus reducing the line pressure to the governor pressure.

Stage 3

When the centrifugal force has moved the valve for the stage 2 to its STOP, it functions as a free-flow valve. The line pressure presses the valve for the stage 3 inward against the centrifugal force and the spring force, thus reducing the line pressure to the governor pressure.

SECTION 5A3

AISIN 50–40LE AUTOMATIC TRANSAXLE

CAUTION: Disconnect the negative battery cable before removing or installing any electrical unit or when a tool or equipment could easily come in contact with exposed electrical terminals. Disconnecting this cable will help prevent personal injury and damage to the vehicle. The ignition must also be in LOCK unless otherwise noted.

TABLE OF CONTENTS

Specifications 5A3-3
Transaxle Specifications 5A3-3
Fluid Level Set After Service 5A3-3
Fastener Tightening Specifications 5A3-4
Special Tools 5A3-6
Special Tools Table 5A3-6
Schematic Diagrams 5A3-9
BTSI and Key Interlock Unit 5A3-9
Transmission Control Module 5A3-10
Connector End View 5A3-15
Component Locator 5A3-16
50–40LE Automatic Transaxle 5A3-16
Diagnosis 5A3-19
Symptom Diagnosis 5A3-19
Preliminary Checks 5A3-19
Leak Diagnosis 5A3-21
Locating Fluid Leaks 5A3-21
Fluid Drips Out of Converter Bell Housing . . . 5A3-21
Leak Between Transaxle Housing and Converter Bell Housing 5A3-21
Leak Between Transaxle Housing and Side Cover 5A3-22
Leak Between Transaxle Housing and Transaxle Housing Cover 5A3-22
Leak at Fluid Cooler 5A3-22
Leak at the Brake Adjusting Bolt 5A3-22
Leak at Differential 5A3-22
Leak at Differential Extension 5A3-22
Leak at Speed Sensors 5A3-22
Leak at Breather 5A3-23
Leak at Selector Shaft 5A3-23
Diagnosis by Symptom 5A3-24
Diagnosis Trouble Code (DTC) chart 5A3-27
DTC P0604 – Internal Transmission Control Module (TCM) Random Access Memory (ROM) Error, AISIN 50–40LE Automatic Transaxle, Diagnosis 5A3-28
DTC P0705 – Transmission Range (TR) Sensor Circuit Malfunction (PRNDL Input), AISIN 50–40LE Automatic Transaxle, Diagnosis 5A3-29
DTC P0712 – Transmission Fluid Temperature (TFT) Sensor Circuit Low Input, AISIN 50–40LE Automatic Transaxle, Diagnosis 5A3-31
DTC P0713 – Transmission Fluid Temperature (TFT) Sensor Circuit High Input, AISIN 50–40LE Automatic Transaxle, Diagnosis 5A3-33
DTC P0717 – Input Shaft Speed (ISS) Sensor Circuit No Signal, AISIN 50–40LE Automatic Transaxle, Diagnosis 5A3-35
DTC P0722 – Output Shaft Speed (OSS) Sensor Circuit No Signal, AISIN 50–40LE Automatic Transaxle, Diagnosis 5A3-37
DTC P0727 – Engine Speed Input Circuit No Signal, AISIN 50–40LE Automatic Transaxle, Diagnosis 5A3-39
DTC P0741 – Torque Converter Clutch (TCC) Circuit Stuck Off, AISIN 50–40LE Automatic Transaxle, Diagnosis 5A3-40
DTC P0742 – Torque Converter Clutch (TCC) Circuit Stuck On, AISIN 50–40LE Automatic Transaxle, Diagnosis 5A3-42
DTC P0743 – Torque Converter Clutch (TCC) Circuit Electrical, AISIN 50–40LE Automatic Transaxle, Diagnosis 5A3-44
DTC P0748 – Pressure Control (Linear) Solenoid Electrical, AISIN 50–40LE Automatic Transaxle, Diagnosis 5A3-46
DTC P0751 – Shift Solenoid 1 (SS1) Stuck Off, AISIN 50–40LE Automatic Transaxle, Diagnosis 5A3-48
DTC P0753 – Shift Solenoid 1 (SS1) Electrical, AISIN 50–40LE Automatic Transaxle, Diagnosis 5A3-50
DTC P0756 – Shift Solenoid 2 (SS2) Stuck Off, AISIN 50–40LE Automatic Transaxle, Diagnosis 5A3-52
DTC P0758 – Shift Solenoid 2 (SS2) Electrical, AISIN 50–40LE Automatic Transaxle, Diagnosis 5A3-54

DTC P1701 – Engine Coolant Temperature (ECT) Sensor Circuit Malfunction, AISIN 50–40LE Automatic Transaxle, Diagnosis 5A3-56
DTC P1702 – Torque Converter Clutch (TCC) Circuit Malfunction, AISIN 50–40LE Automatic Transaxle, Diagnosis 5A3-57
DTC P1790 – Internal Transmission Control Module (TCM) Random Access Memory (ROM) Checksum Error, AISIN 50–40LE Automatic Transaxle, Diagnosis 5A3-59
DTC P1791 – Throttle Position (TP) Sensor Circuit Malfunction, AISIN 50–40LE Automatic Transaxle, Diagnosis 5A3-60
Maintenance and Repair 5A3-62
On-Vehicle Service 5A3-62
Transaxle Fluid Level Checking Procedure . . 5A3-62
Fluid Drain Procedure 5A3-62
Case Porosity Repair 5A3-63
Fluid Cooler Flushing 5A3-63
Shift Control Lever 5A3-64
Shift Control Cable 5A3-69
Control Cable Adjustment 5A3-72
Park/Neutral Position (PNP) Switch 5A3-73
Brake Transaxle Shift Interlock 5A3-75
Key Interlock 5A3-76
Fluid Filler Tube 5A3-78
Vehicle Speed Sensor (VSS) 5A3-78
Input Shaft Speed (ISS) Sensor 5A3-80
Output Shaft Speed (OSS) Sensor 5A3-81
Transmission Fluid Temperature (TFT) Sensor 5A3-82
Valve Body Solenoids 5A3-85
Valve Body 5A3-89
Drive Axle Fluid Seals 5A3-95
Fluid Cooler Pipes and Hoses 5A3-96
Transaxle Left Mount 5A3-98
Transaxle Left Bracket 5A3-101
Transaxle Center Bracket 5A3-102
Transaxle Center Mount 5A3-102
Transaxle Assembly 5A3-103
Unit Repair 5A3-111
Major Component Disassembly 5A3-111
Oil Pump, Second Coast and Second Brake Assembly 5A3-133
Second Coast, Second Brake Hub and One-Way Clutch 5A3-150
Forward and Direct Clutch 5A3-154
Planetary Gear and Planetary Sun Gear . . . 5A3-165
Low/Reverse Brake Clutch Piston Assembly, Front Planetary Ring Gear and One-Way Clutch 5A3-168
Underdrive Clutch 5A3-175
Underdrive Brake 5A3-184
Counter Drive Gear 5A3-187
Underdrive Planetary Gear and Differential Drive Pinion Gear 5A3-193
Transaxle Rear Case and C-1 Accumulator Piston 5A3-201
Differential 5A3-205
Valve Body Assembly 5A3-215
Upper Valve Body 5A3-226
Center Valve Body 5A3-229
Lower Valve Body 5A3-236
Bearing and Thrust Washer Location 5A3-247
Major Component Assembly 5A3-248
General Description and System Operation 5A3-273
50–40LE Automatic Transmission 5A3-273

SPECIFICATIONS

TRANSAXLE SPECIFICATIONS

Transaxle Capacity	
Maximum Torque Multiplication of the Torque Converter	2.0
Torque Converter Diameter	241 mm (9.5 in.)
Ratios	
First Gear	3.900:1
Second Gear	2.228:1
Third Gear	1.477:1
Fourth Gear	1.062:1
Reverse	4.271:1
Measurements	
Weight of Transaxle	81 kg (178.6 lb)
Fluid Capacity	7.5 L (7.9 qts)
Automatic Transaxle Fluid	TOTAL FLUID HX

FLUID LEVEL SET AFTER SERVICE

Repair	Amount of Fluid to Add After Repair
Maintenance Replace	2.5 – 3.0L (2.6 – 3.1 qts)
Complete Overhaul	5.5 – 6.0L (5.8 – 6.3 qts)
Dry	6.5 – 7.0L (6.9 – 7.4 qts)

Important: Make sure to maintain the proper fluid level in the transaxle. After each repair or service procedure, add the specified amount of fluid and check to confirm that the transaxle contains the appropriate fluid level. Refer to “Transaxle Fluid Level Checking Procedure” in this section.

LINE PRESSURE SPECIFICATION

Application	Idling	Stall
At “D” range	3.5 – 4.1 kg/cm^2 (50–58 psi)	10.6 – 13.6 kg/cm^2(151–193 psi)
At “R” range	6.0 – 7.0 kg/cm^2 (85–100 psi)	16.3 – 20.5 kg/cm^2(282–292 psi)

RANGE REFERENCE

Range		Park/ Neutral	Reverse	D				3			L	
Gear		P/N	R	1st	2nd	3rd	4th	1st	2nd	3rd	1st	2nd
C_1	Forward Clutch			A	A	A	A	A	A	A	A	A
C_2	Direct Clutch		A				A					
C_3	Under Drive Clutch					A	A			A		
B_1	2nd Coast Brake				O	O			O	O		O
B_2	2nd Brake				O	O	O		O	O		O
B_3	1st & Reverse Brake		O								O	
B_4	Under Drive Brake	O	O	O	O			O	O		O	O
F_1	Planetary Sungear Oneway Clutch				L	L			L	L		L
F_2	Ring Gear OneWay Clutch			L				L			L	
F_3	Under Drive Planetry Sungear Oneway Clutch			L	L			L	L		L	L
S_1	Solenoid No. 1	OFF	OFF	OFF	ON	ON	OFF	OFF	ON	ON	OFF	ON
S_2	Solenoid No. 2	OFF	OFF	ON	ON	OFF	OFF	ON	ON	OFF	ON	ON

A : Applied L : Locking

FASTENER TIGHTENING SPECIFICATIONS

Application	N•m	Lb-Ft	Lb-In
Accumulator Piston Cover Screws	8-12	—	71-106
Coolant Surge Tank Bolt	25	18	—
Fluid Cooler Pipe to Radiator Bolt	20-29	15-22	—
Fluid Cooler Pipe to Transaxle Bolts	20-29	15-22	—
Fluid Filler Tube Bracket Nut	15	11	—
Front Engine Mount Bracket to Engine Bolts	90	66	—
Front Engine Mount Bracket to Transaxle through Bolts	90	66	—
Input Shaft Speed (ISS) Sensor	4-7	—	35-62
Key Interlock Solenoid Screws	2	—	18
Linear Solenoid to Valve Body Clamp Bolt	6-7	—	53-62
Lockup Solenoid to Valve Body Clamp Bolt	6-7	—	53-62
Lube Apply Tube Clamp Bolt	4-7	—	35-62
Oil Pan-to-Transaxle Case Bolts	40	30	—
Oil Pump–to–Transaxle Case Bolts	20-29	15-22	—
Output Shaft Speed (OSS) Sensor	4-7	—	35-62
Park/Neutral Position (PNP) Switch Bolt	10-16	7-11	—
Park/Neutral Position (PNP) Switch Retaining Nut	6-8	—	53-71
Park/Neutral Position (PNP) Switch Stud Bolt	20-29	15-22	—
Rear Valve Body Cover Plate No. 1 Bolts	6-7	—	53-62
Rear Valve Body Cover Plate No. 2 Bolts	6-7	—	53-62
Ring Gear Locking Plate Set Bolts	90-103	66-76	—
Shift Control Cable Adjuster Pinch Bolt Nut	8	—	71
Shift Control Cable Linkage Retaining Nut	15	11	—
Shift Control Cable Mounting Bracket Nuts	6	—	53
Shift Interlock Solenoid Bolts	4	—	36
Shift Solenoid 1 (SS1)–to–Valve Body Bolt	6-7	—	53-62
Shift Solenoid 2 (SS2)–to–Valve Body Bolt	6-7	—	53-62
Stator Support–to–Oil Pump Body M5 Bolts	6-7	—	53-62
Stator Support–to–Oil Pump Body M6 Bolts	10-14	—	89-124
Torque Converter–to–Flex Plate Bolts	60	44	—
Transaxle Cam Plate and Detent Spring Retaining Bolts	8-12	—	71-106
Transaxle Case Plate Bolts	4-7	—	35-62
Transaxle Center Bracket–to–Transaxle Bolts	90	66	—
Transaxle Center Mount–to–Center Member Bolts	65	48	—
Transaxle Housing–to–Transaxle Case Bolts	23-35	17-26	—
Transaxle Housing Cover–to–Transaxle Case Bolts	6-9	—	53-78
Transaxle Left Bracket–to– Transaxle Bolts	48	35	—
Transaxle Left Mount–to–Transaxle Left Bracket Bolt	48	35	—
Transaxle Fluid Drain Plug	23-55	17-40	—

Fastener Tightening Specifications (Cont'd)

Application	N•m	Lb-Ft	Lb-In
Transaxle Oil Filter Bolts	4-7	—	35-62
Transaxle Oil Reserver Plate Bolts	4-7	—	35-62
Transaxle Rear Case–to–Transaxle Case M6 Bolts	8-12	—	71-106
Transaxle Rear Case–to–Transaxle Case M8 Bolts	20-29	15-22	—
Transmission Fluid Temperature (TFT) Sensor	7-13	—	62-115
Transmission Fluid Temperature (TFT) Sensor Protector Bolt	20-29	15-22	—
Transmission Fluid Temperature (TFT) Sensor Protector Nut	20-29	15-22	—
Underdrive Brake Accumulator Bracket Bolts	8-12	—	71-106
Underdrive Brake Band Anchor Bolt	133-200	100-149	—
Valve Body–to–Case Bolts	6-7	—	53-62
Valve Body Cover–to–Case Bolts	20-30	15-22	—
Valve Body Suction Cover–to–Case Bolts	6-7	—	53-62

SPECIAL TOOLS

SPECIAL TOOLS TABLE

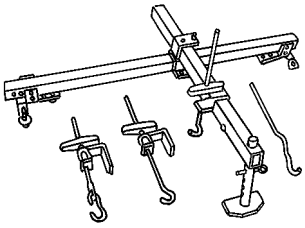 A102B152	**J-28467-B Engine Support Fixture**
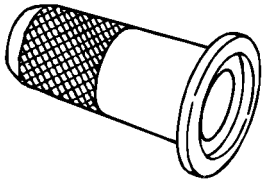 C5A0010A	**KM-674 Oil Seal Installer**
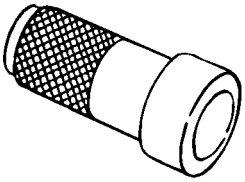 C5A0076A	**KM-697 Bearing Driver**
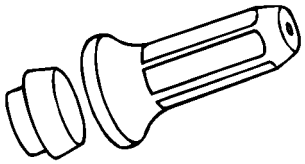 C5A0083A	**J-41102 Seal Installer**
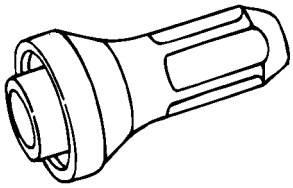 C5A0084A	**J-28540-A Seal Installer**
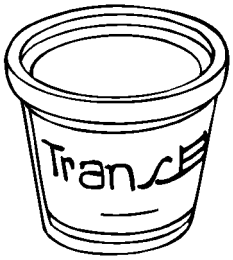 C5A0082A	**J-36850 Assembly Lubricant**
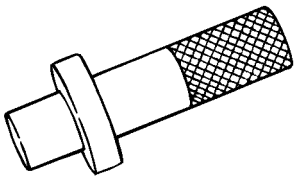 C5A0187A	**KM-695 Bearing Driver**
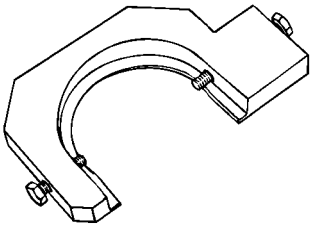 C5A0148A	**KM-696 Gear Holder**

SPECIAL TOOLS TABLE (Cont'd)

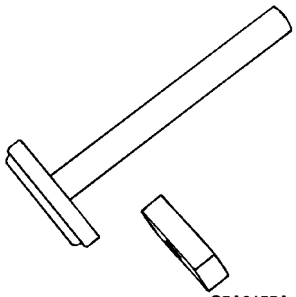 C5A0155A	**KM-305** **Bearing Driver**
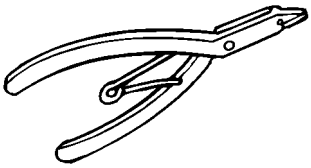 C5A0088A	**KM-396** **Snap Ring Pliers**
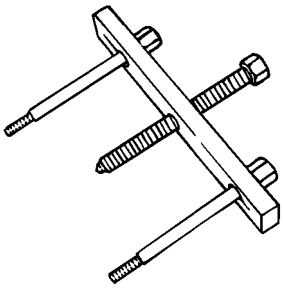 C5A0087A	**KM-702** **Oil Pump Remover**
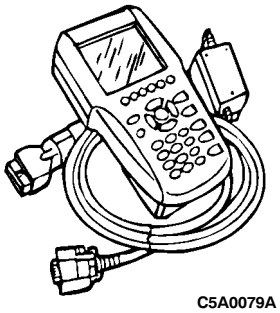 C5A0079A	**DC-11017-A** **Scan-100** **Scan Tool**

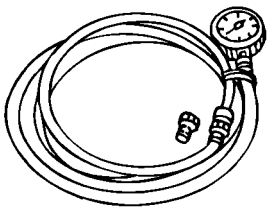 C5A0080A	**KM-498-B** **Universal Pressure** **Gauge Set**
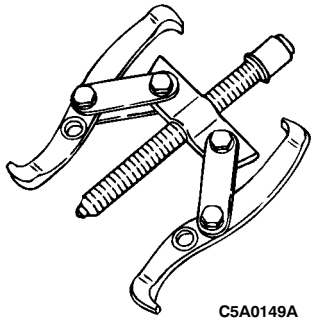 C5A0149A	**KM-161-A** **Two-Jaw Puller**
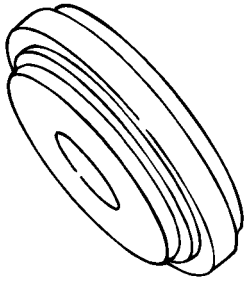 C5A0151A	**KM-695** **Bearing Driver Adapter**
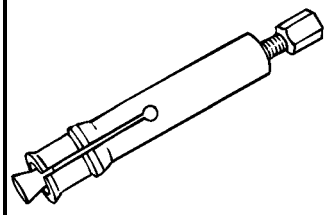 C5A0153A	**KM-J-28544** **Bearing Pre-Load Tool**

SPECIAL TOOLS TABLE (Cont'd)

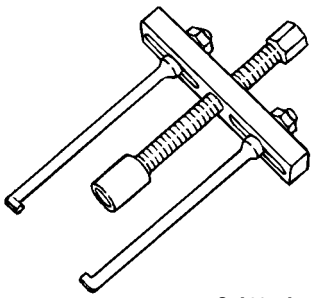 C5A0154A	**KM-210-A Bearing Puller**
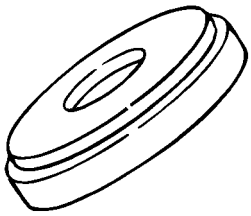 C5A0156A	**KM-695-A Bearing Driver Adapter**
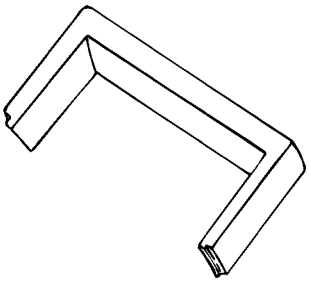 C5A0145A	**KM-699 Spring Compressor**

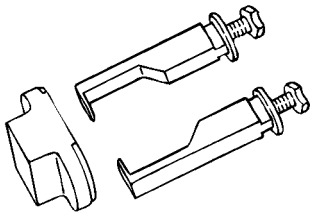 C5A0150A	**KM-709 Bearing Puller Adapter**
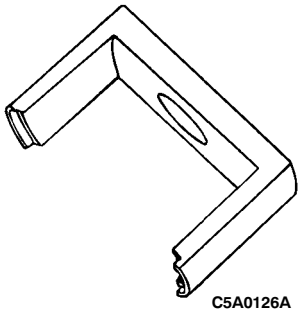 C5A0126A	**KM-698 Spring Compressor**

SCHEMATIC DIAGRAMS

BTSI AND KEY INTERLOCK UNIT

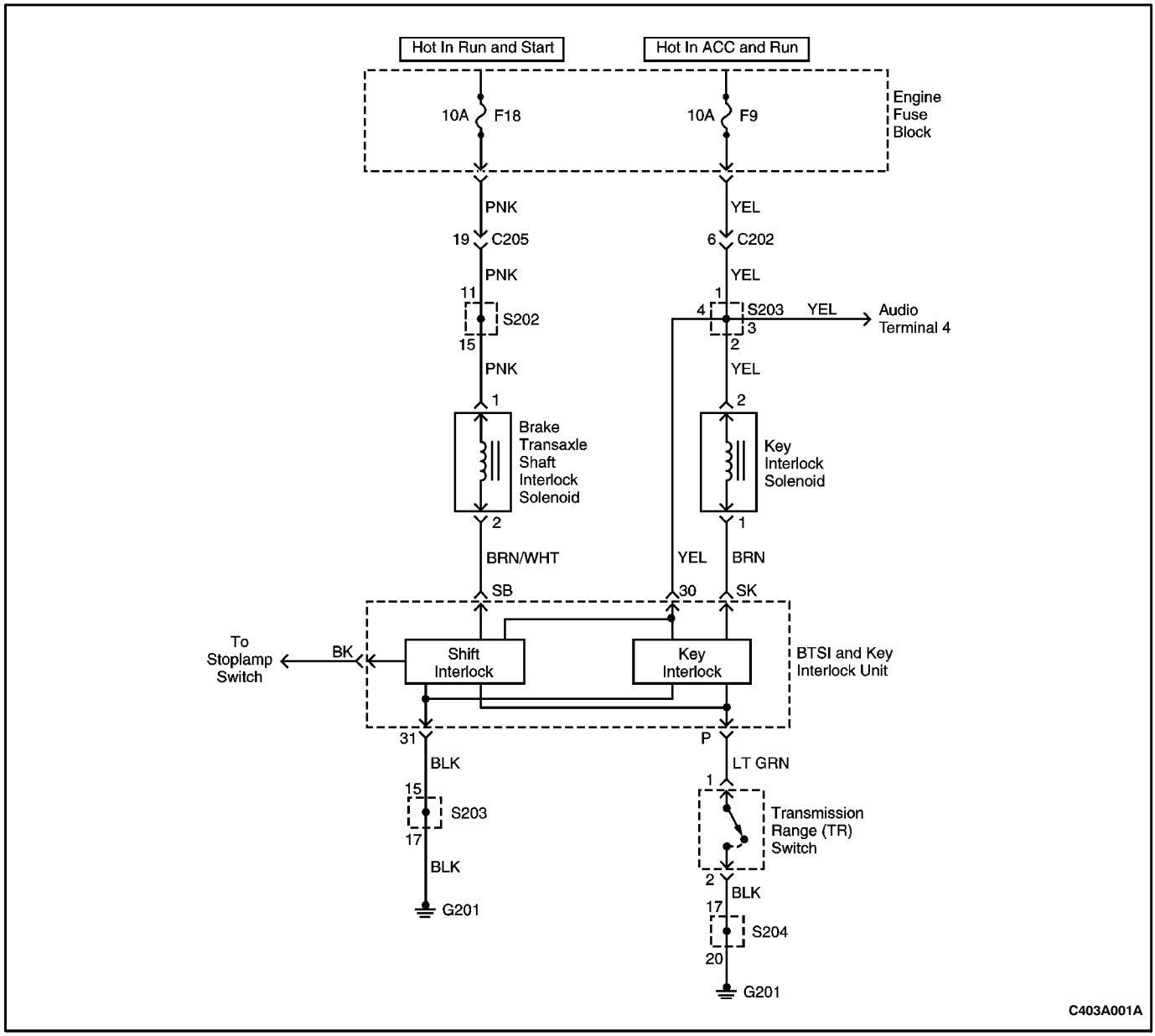

TRANSMISSION CONTROL MODULE (1 OF 5)

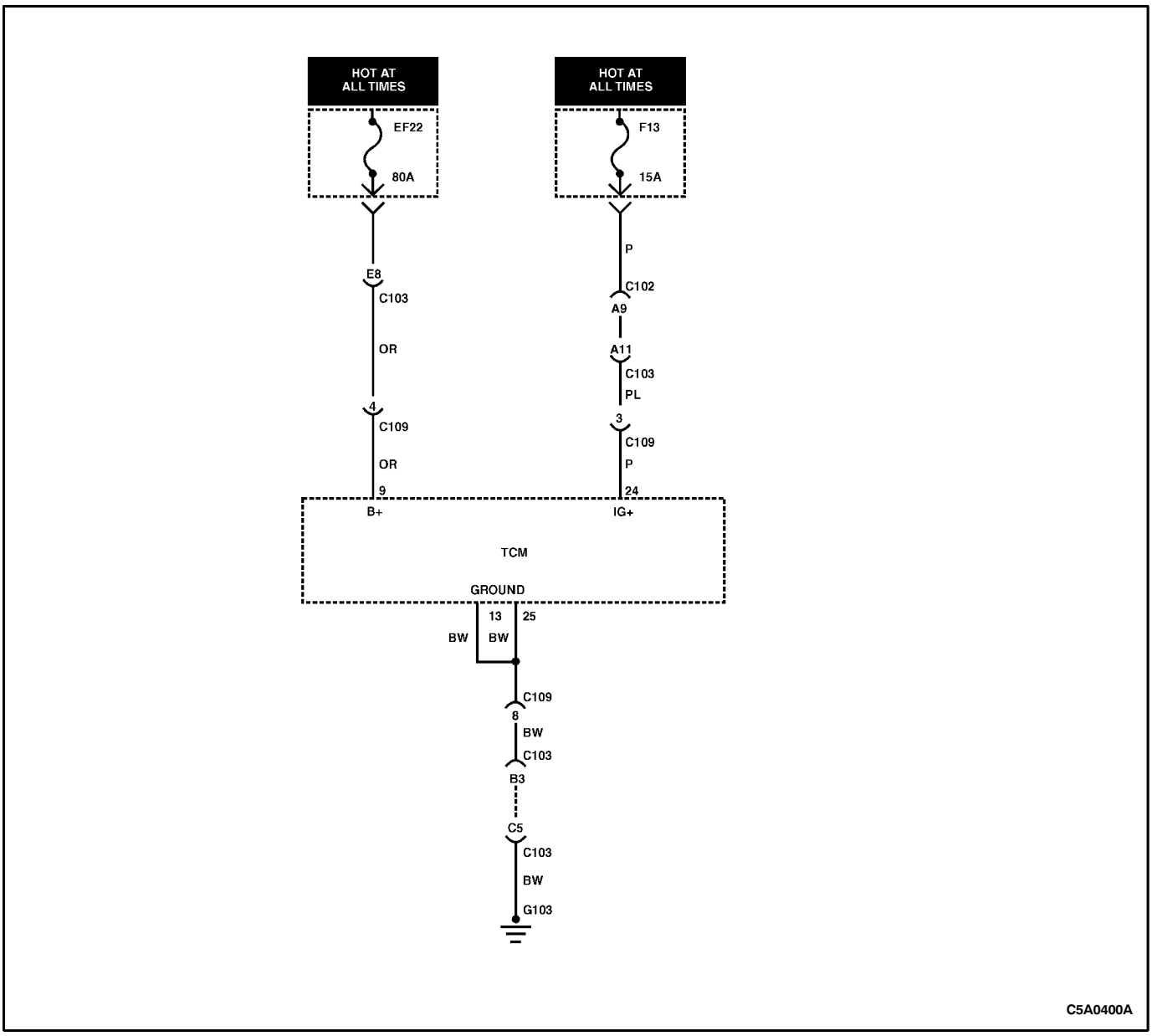

TRANSMISSION CONTROL MODULE (2 OF 5)

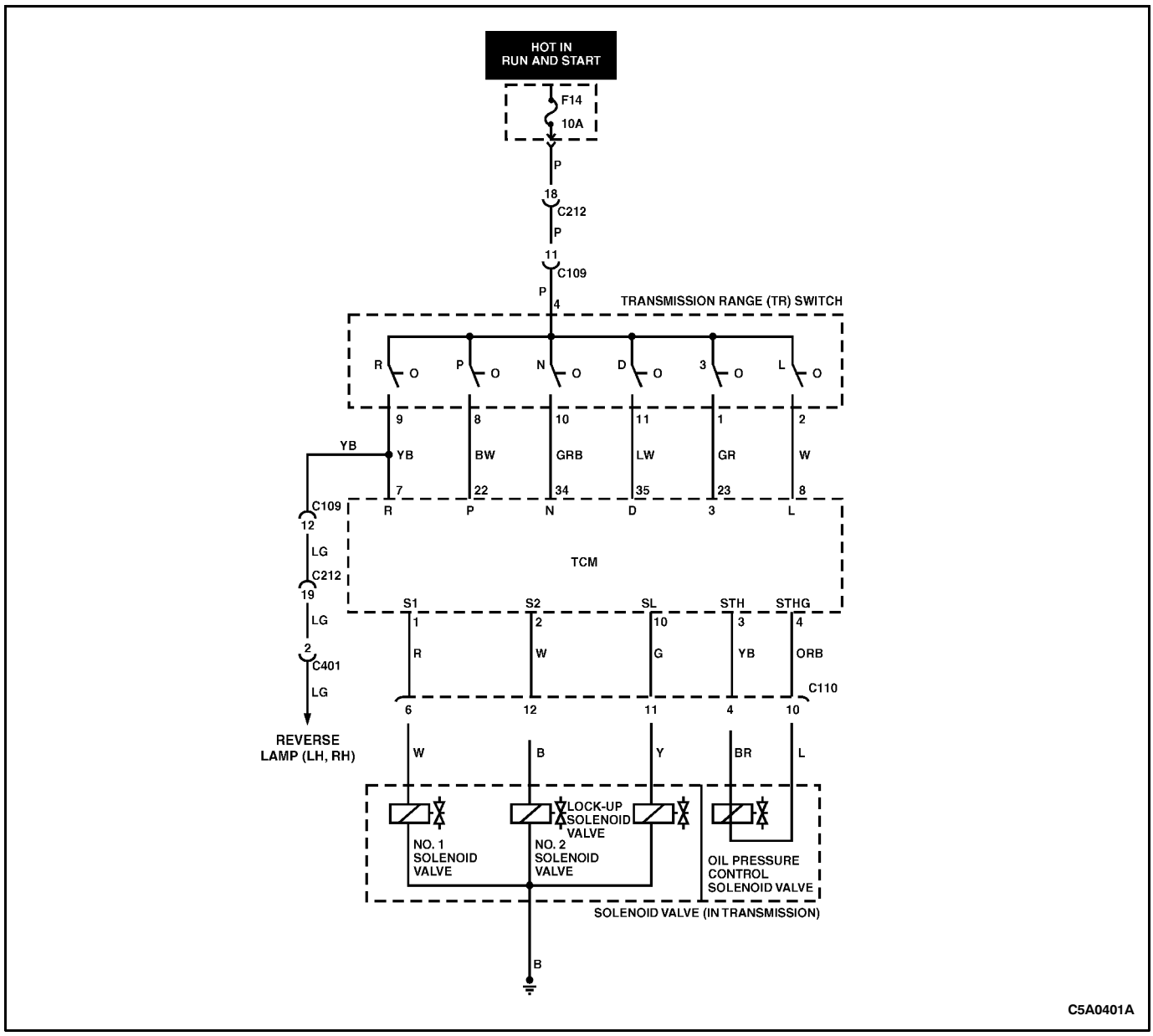

TRANSMISSION CONTROL MODULE (3 OF 5)

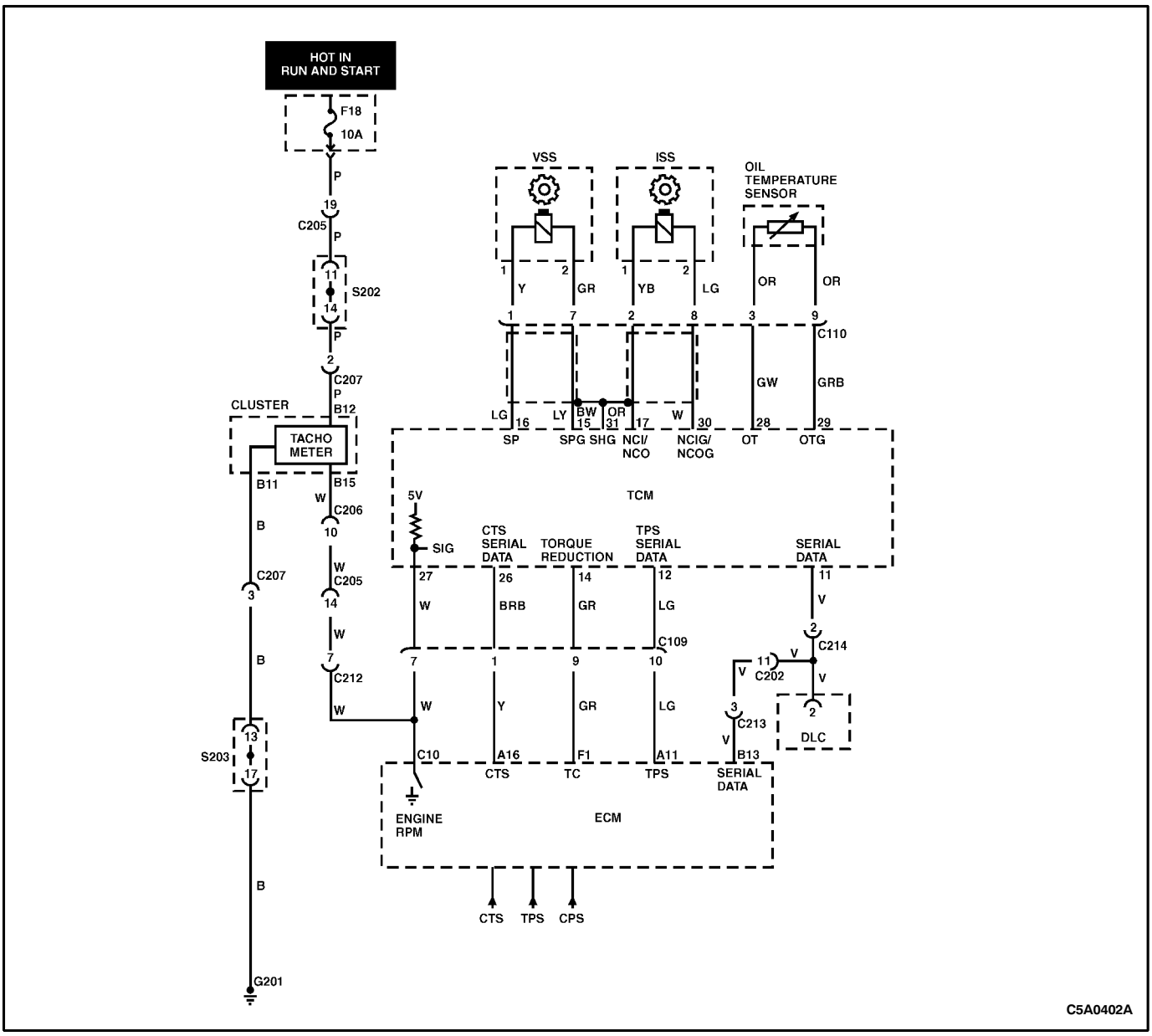

TRANSMISSION CONTROL MODULE (4 OF 5)

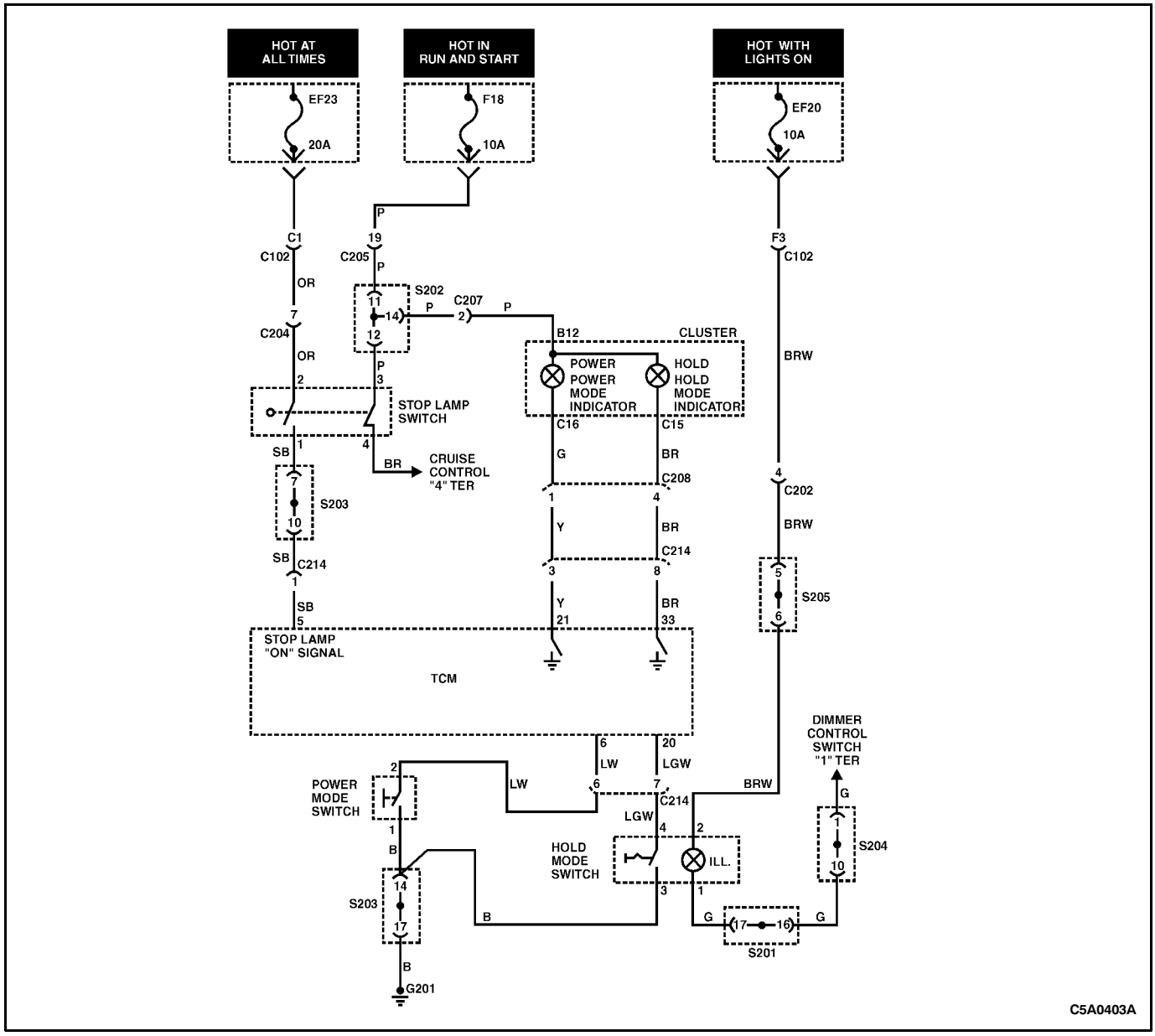

TRANSMISSION CONTROL MODULE (5 OF 5)

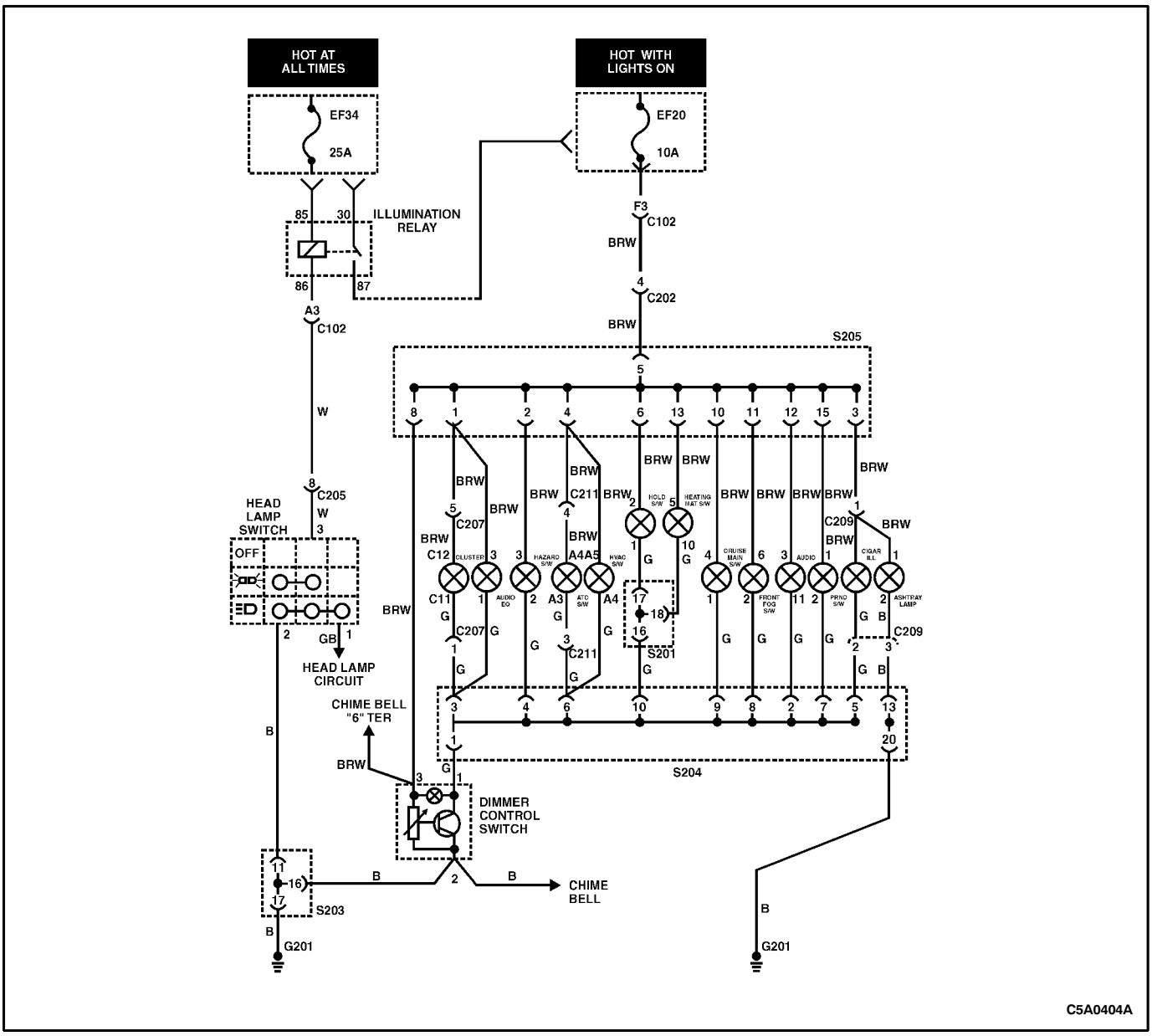

CONNECTOR END VIEW

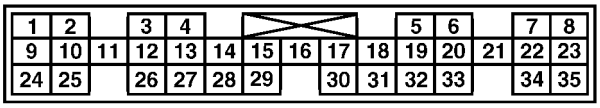

TRANSMISSION CONTROL
MODULE (TCM)
CONNECTOR

C5A0405A

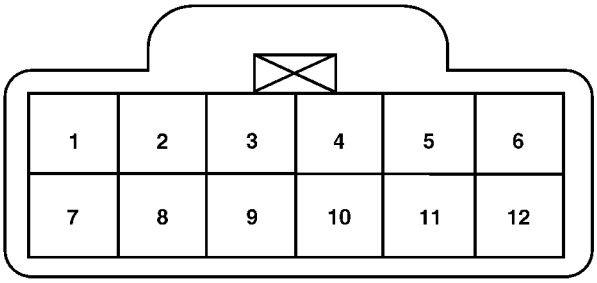

C110
TRANSMISSION CONTROL MODULE (TCM)
SENSOR (BLACK) CONNECTOR

C5A0410A

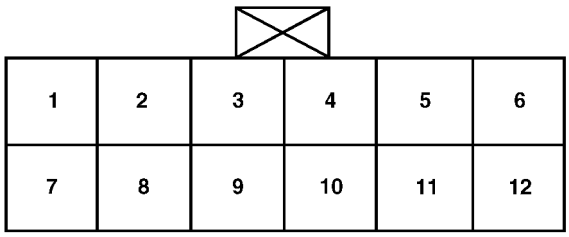

C109
TRANSMISSION CONTROL MODULE (TCM)
ENGINE CONTROL (BLACK) CONNECTOR

C5A0406A

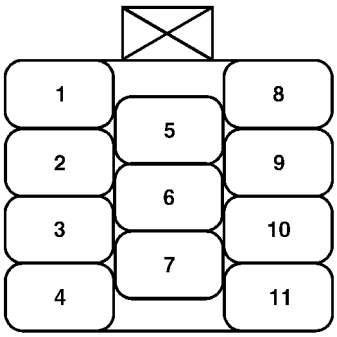

TRANSMISSION RANGE (TR)
SWITCH CONNECTOR

C5A0408A

COMPONENT LOCATOR

50–40LE AUTOMATIC TRANSAXLE

Component Locator

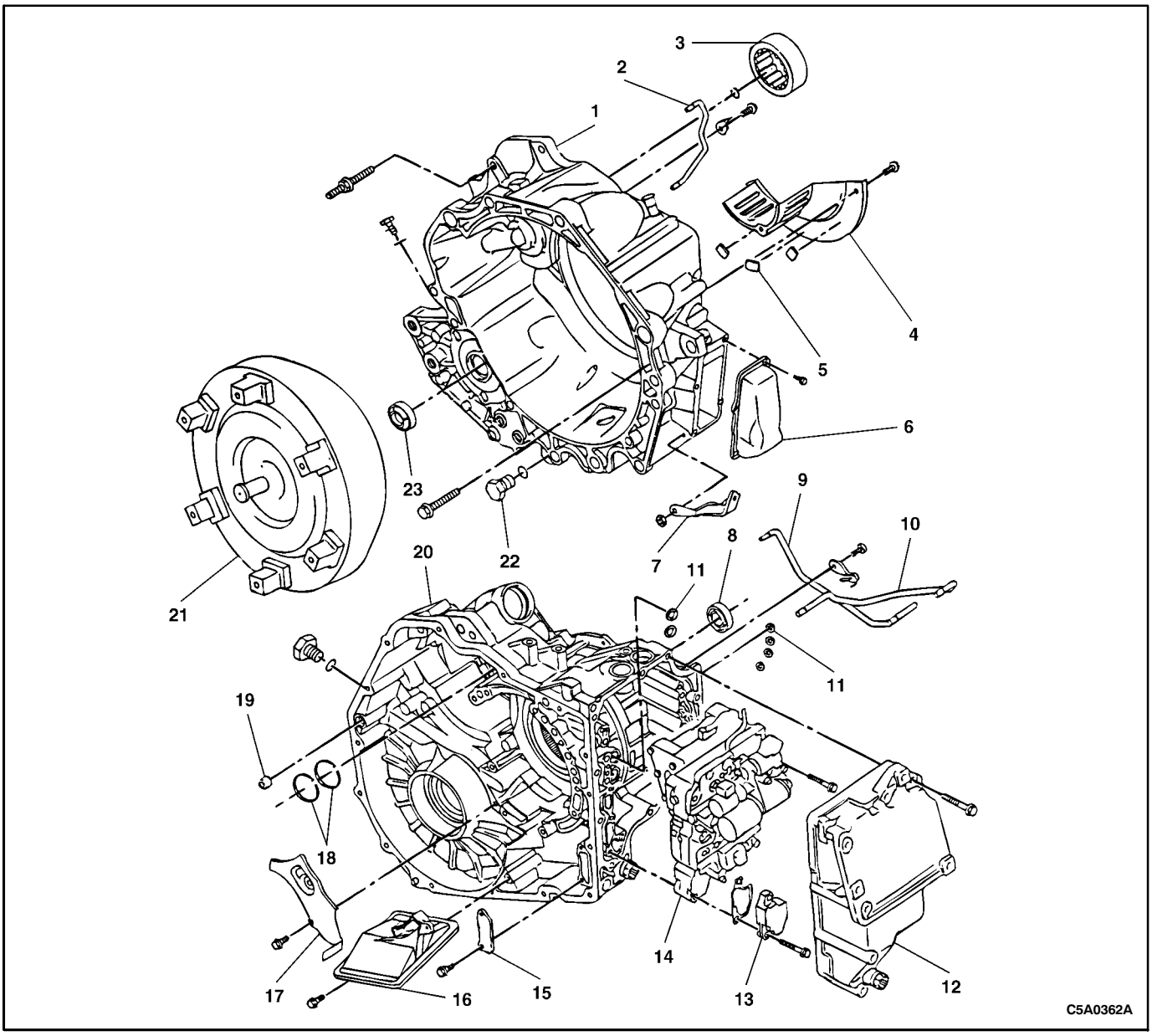

1. Transaxle Housing Side
2. Differential Bearing Lubrication Apply Tube
3. Roller Bearing
4. Oil Reserver Plate
5. Magnet
6. Transaxle Housing Cover
7. Transmission Fluid Temperature (TFT) Sensor Protector Bracket
8. Oil Seal
9. Apply Tube
10. Lubrication Apply Tube
11. Apply Seal
12. Valve Body Cover
13. Suction Cover
14. Valve Body
15. Transaxle Case Plate
16. Oil Filter
17. Oil Reserver Plate
18. Seal Rings
19. Apply Seal
20. Transaxle Case Side
21. Torque Converter
22. Plug
23. Oil Seal

Component Locator

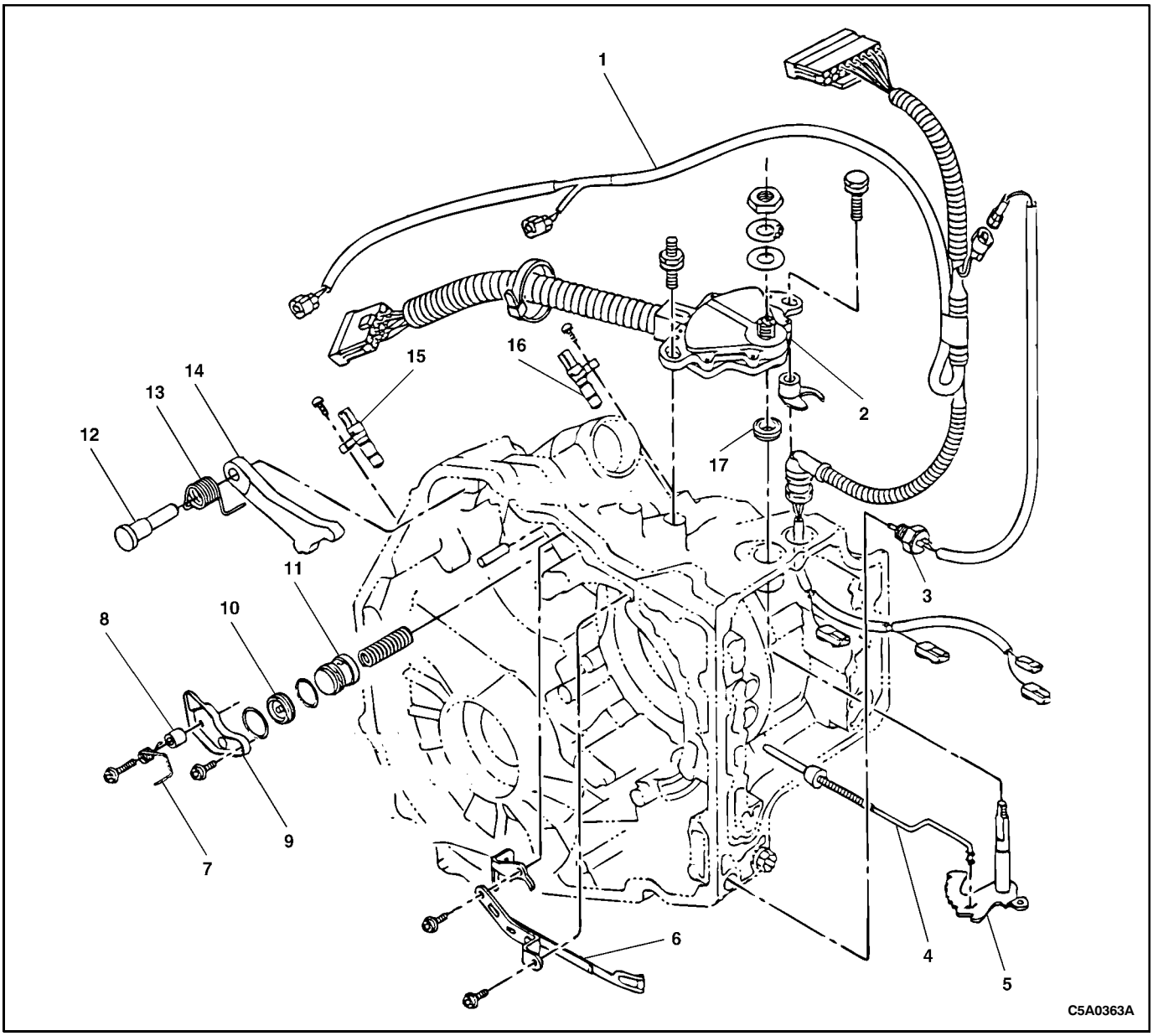

1. Transmission Wire Loom
2. Park/Neutral Position (PNP) Switch
3. Transmission Fluid Temperature (TFT) Sensor
4. Parking Lock Rod
5. Manual Valve Lever
6. Detent Spring
7. Torsion Spring
8. Spring Guide Sleeve
9. Accumulator Bracket
10. Accumulator Cover
11. Accumulator Piston
12. Parking Lock Pawl Shaft
13. Spring
14. Parking Lock Pawl
15. Output Shaft Speed (OSS) Sensor
16. Input Shaft Speed (ISS) Sensor
17. Oil Seal

Component Locator

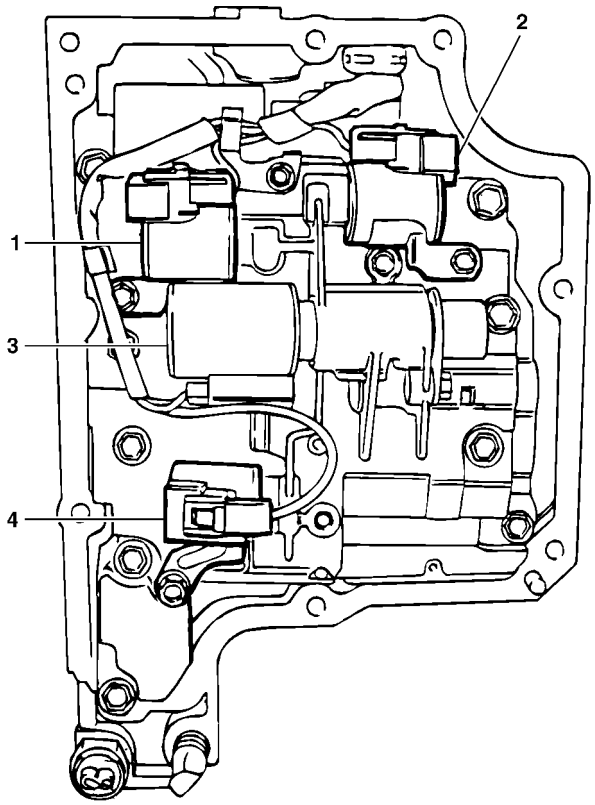

C5A0372A

1. Shift Solenoid 1 (SS1)
2. Shift Solenoid 2 (SS2)
3. Linear Solenoid (Pressure)
4. Lockup Solenoid

DIAGNOSIS

SYMPTOM DIAGNOSIS

PRELIMINARY CHECKS

To properly diagnose a concern, first understand the condition. Customer contact may be required to begin to verify the concern. Understand the conditions as to when the concern occurs. For example:

- Hot or cold vehicle temperature
- Hot or cold ambient temperature
- Vehicle driving conditions
- Vehicle loaded or unloaded

After understanding when and how the concern occurs, proceed to verify the concern. Perform the following initial steps before performing on–board diagnostic procedures.

- Verify the concern by driving the vehicle
- Check the Automatic Transmission Fluid (ATF) level and condition
- Check shift linkage for proper adjustment.

Test Driving the Vehicle

Check the level of the ATF before performing a road test.

Begin the test drive with the vehicle in the D position. Drive the vehicle causing the transmission to upshift and downshift. Listen for abnormal sounds coming from the transmission or driveline related sounds. Check the shifting speeds at light acceleration and that the shift points are correct. Also check for any slipping or abrupt shifts. Check that the lockup function occurs and is correct.

Shift Point Chart–Economy Range

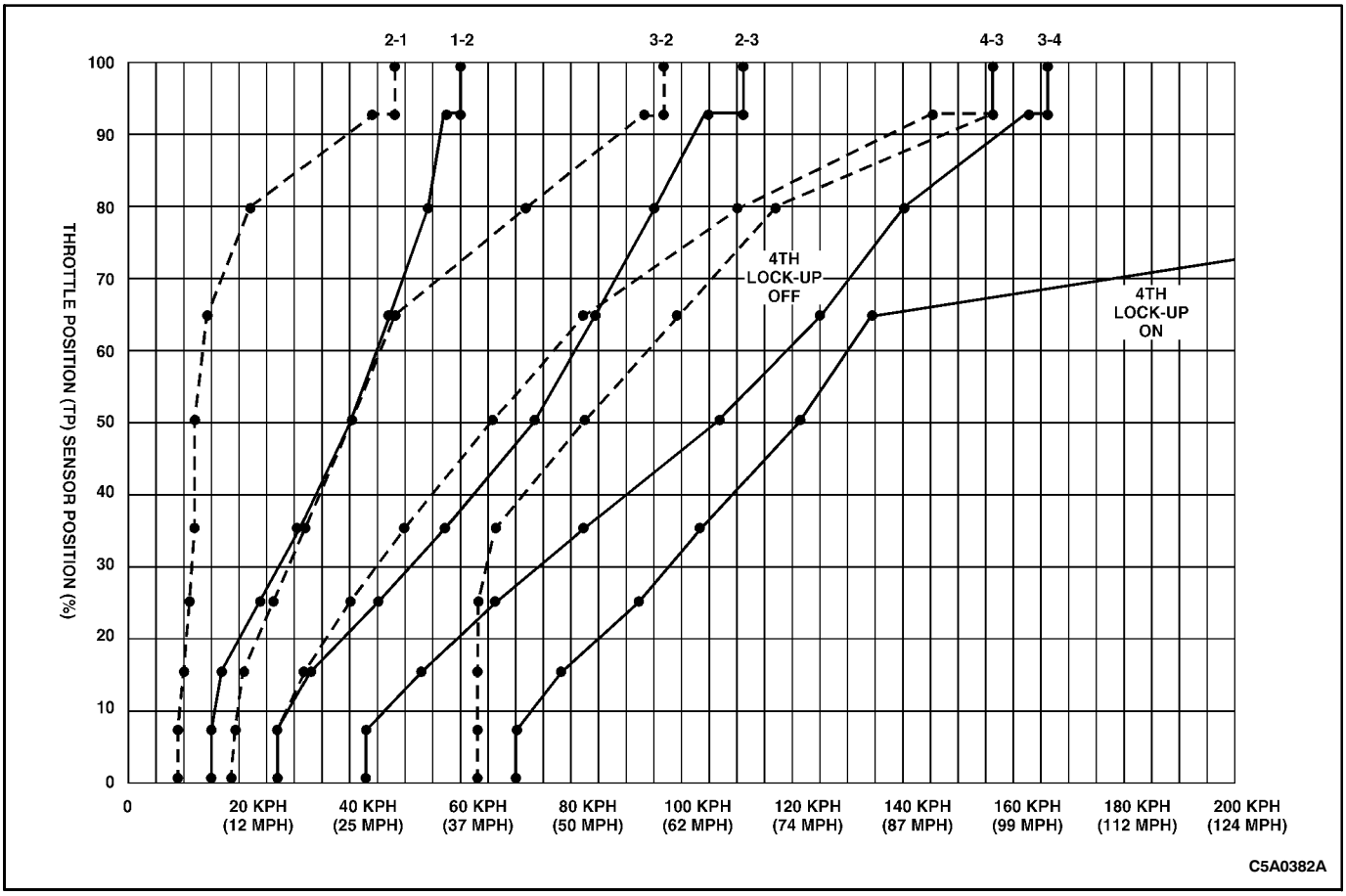

Shift Point Chart–Power Range

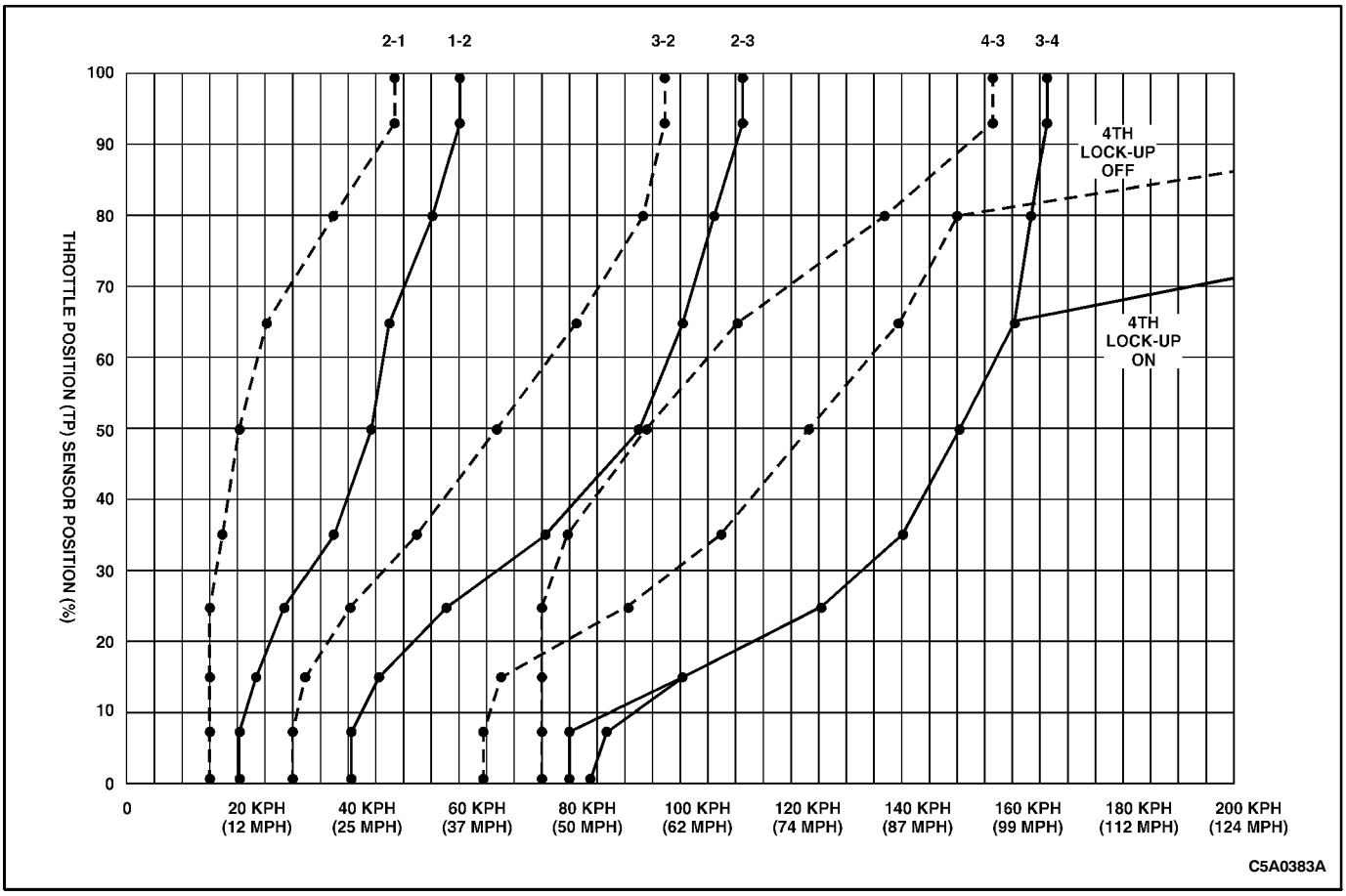

Check Fluid Level

Do not drive the vehicle if the ATF level is low. Check the level of the ATF, using the following procedure:

1. Position the vehicle on a level surface. Apply the parking brake and block the wheels.
2. Run the engine at idle speed, depress the brake pedal and move the shift lever through each range. Allow time in each range to engage the transmission, then return to park.
3. Allow the ATF to reach normal operating temperature. Normal operating temperature is 80-90°C (176-194°F). Do not turn off the engine during the fluid level check.
4. Pull the fluid level indicator out of the indicator tube, wipe it clean and put it back into the tube. Make sure it is fully seated. Pull the fluid level indicator out of the indicator tube again and check the fluid level.
5. The fluid level should be between the MIN and MAX marks on the side of the fluid indicator marked 80°C (176°F). If the transmission fluid is below the specified level, add TOTAL FLUID HX as necessary.

High or Low Fluid Level

Do not overfill the transaxale. ATF that is too high will result in foaming. Foaming will cause erratic control pressure, and the aerated fluid will be forced from the vent. If an overfill occurs, excess fluid must be removed.

If the ATF is too low, the transaxle will experience loss of engagement or slipping. A low fluid level may indicate a leak that could cause transaxle damage.

Fluid Condition Check

Observe the color and odor of the ATF. It should be dark red, not brown or black. A burnt odor indicates an overheating condition, a clutch disc failure or band failure. Also inspect the fluid for specks, signs of engine coolant or varnish on the indicator. If fluid contamination or transmission failure is confirmed by futher evidence of coolant or excessive solids in the transaxle, the transmission should be disassembled and completely cleaned and serviced.

LEAK DIAGNOSIS

LINE PRESSURE CHECK PROCEDURE

The AISIN 50–40LE Automatic transaxle uses a vant type oil pump to produce hydraulic pressure, and a transaxle pressure control solenoid to control that pressure at the pressure regulator valve, after it leaves the pump. Line pressure are calibrated for 2 sets of gear range Drive and Reverse. This allows the transaxle line pressure to be appropirate for different pressure needs in different gear range.

1. Remove the oil pressure test plug on transaxle case and mount oil pressure gauge (KM–498–B).
2. Check the four wheels.
3. Fully apply the parking brake.
4. Start the engine and allow it to warm up at idle.
5. Step down strongly on the brake pedal with your left foot.
6. Shift into “D” or “R” range to measure line pressure.
7. Apply the accelerator pedal with your right foot, and messure the line pressure at the engine speed (stall speed 2250 ± 200 rpm).

Caution: Do not racing more than 5 seconds or the automatic transaxle damaged.

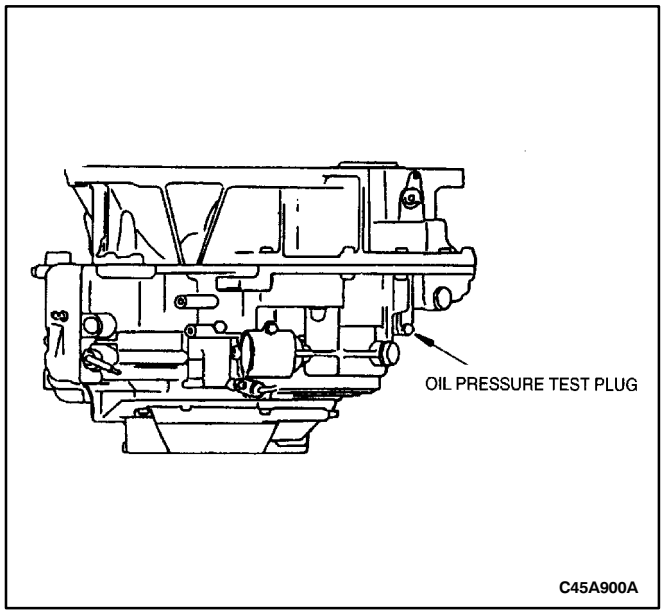

LOCATING FLUID LEAKS

General Method

1. Verify that the material leaking is transaxle fluid.
2. Thoroughly clean the suspected leak area.
3. Allow the transaxle to reach the normal operating temperature of 80-90°C (176-194°F).
4. Park the vehicle over a clean paper or a clean cardboard.
5. Turn the engine OFF and look for fluid spots on the paper.
6. Make the necessary repairs to correct the leak.

Powder Method

1. Thoroughly clean the suspected leak area.
2. Apply an aerosol type powder, such as foot powder, to the suspected leak area.
3. Allow the transaxle to reach the normal operating temperature of 80-90°C (176-194°F).
4. Turn the engine OFF.
5. Inspect the suspected leak area and trace the leak path through the powder to find the source of the leak.
6. Make the necessary repairs to correct the leak.

Once the leak point is found, the source of the leak must be determined and repaired.

FLUID DRIPS OUT OF CONVERTER BELL HOUSING

Checks	Action
Check for a leak at the weld seam of the torque converter.	Replace the torque converter.

LEAK BETWEEN TRANSAXLE HOUSING AND CONVERTER BELL HOUSING

Checks	Action
Check for loosened fastening bolts on the torque converter bell housing.	Tighten the bolts on the torque converter bell housing.

LEAK BETWEEN TRANSAXLE HOUSING AND SIDE COVER

Checks	Action
Check for loosened fastening bolts on the fluid pan.	Tighten the side cover bolts. Replace the silicone sealer, as needed.
Check for a damaged side cover.	Replace the side cover gasket.

LEAK BETWEEN TRANSAXLE HOUSING AND TRANSAXLE HOUSING COVER

Checks	Action
Check for loosened bolts connecting the housing cover to the transaxle.	Tighten the housing cover bolts.
Check for a damaged housing cover.	Replace the housing cover.

LEAK AT FLUID COOLER

Checks	Action
Check for a loose cooler pipe bolt connection on the transaxle and/or the radiator.	Tighten the bolts on the transaxle and/or the radiator.
Check for a damaged gasket at the transaxle connection.	Replace the gasket.
Check for a leak in the cooler.	Replace the radiator.

LEAK AT THE BRAKE ADJUSTING BOLT

Checks	Action
Check for a damaged O-ring at the brake band.	Replace the O-ring.

LEAK AT DIFFERENTIAL

Checks	Action
Check for any damaged shaft seals at the input shafts.	Replace the shaft seals.

LEAK AT DIFFERENTIAL EXTENSION

Checks	Action
Check for a damaged O-ring.	Replace the O-ring.
Check for loosened extension housing bolts.	Tighten the extension housing bolts.

LEAK AT SPEED SENSORS

Checks	Action
Check for a damaged O-ring in the speed sensor.	Replace the O-ring.

LEAK AT BREATHER

Checks	Action
Check whether the fluid level is too high.	Correct the fluid level.
Check for the wrong grade of transaxle fluid.	Drain the transaxle fluid and replace it with the correct transaxle fluid. Replace the transaxle, as needed.

LEAK AT SELECTOR SHAFT

Checks	Action
Check for a damaged selector shaft seal.	Replace the selector shaft seal.

DIAGNOSIS BY SYMPTOM

Condition	Possible Causes	Action
Engine does not start in Park and/or Neutral.	• Gearshift lever and cable out of adjustment. • Transmission Range (TR) switch does not operate. • TR switch not correctly aligned with the transaxle.	• Confirm gear selector or cable adjustment and operation. • Adjust the TR switch.
Engine starts in gearshift lever positions other than Park or Neutral.	• Gearshift lever or cable damaged or out of adjustment. • TR switch damaged or out of adjustment.	• Check gearshift lever or cable adjustment and operation. • Confirm TR switch adjustment and operation.
Vehicle moves in Park or transaxle stays in Park when shifted to another gear.	• Gearshift lever and cable out of adjustment. • Parking pawl damaged.	• Check the gearshift lever and cable adjustments and operation. • Inspect the parking pawl. Repair or replace as necessary.
Vehicle moves in Neutral.	• Gearshift lever and cable out of adjustment. • Torque converter damaged. • Forward/direct clutch damaged.	• Check the gearshift lever and cable adjustment and operation. • Inspect the torque converter. • Inspect the forward/direct clutch. Repair or replace as necessary.
Vehicle does not move in any forward gear position or reverse.	• Shift cable damaged. • Automatic transmission fluid level. • Oil pump broken or damaged seals. • Torque converter damaged.	• Inspect the shift cable. Repair or replace as necessary. • Check the fluid level and fill as necessary. • Inspect the oil pump. Repair or replace as necessary. • Inspect the torque converter. Replace as necessary.
Vehicle does not move in any forward gear position, reverse is OK.	• ATF level. • Solenoid valves for shifting. • Forward/direct clutch worn or damaged. • One-way clutch worn or damaged. • Oil flow to forward/direct clutch blocked.	• Check the fluid level and fill as necessary. • Inspect the solenoid valves. Replace as necessary. • Inspect the one-way clutch. Replace as necessary. • Inspect the clutch. Replace as necessary. • Perform clutch operation test.
Vehicle does not move in reverse, forward gear positions OK.	• Low/reverse clutch worn or damaged.	• Inspect the low/reverse clutch. Check the clutch pack clearance.
Noise in Park or Neutral, does not stop in Drive	• Loose flywheel-to-converter nuts. • Oil pump worn. • Torque converter failure.	• Tighten nuts to specifications. • Inspect the oil pump. Replace as necessary. • Inspect the torque converter. Replace as necessary.
Noise in all gears, changes with acceleration to deceleration.	• Automatic transmission fluid level. • Front wheel driveshaft and joint. • Differential gear set worn.	• Check the fluid level and fill as necessary. • Inspect the driveshaft and joint. Replace as necessary. • Inspect the differential gear set. Repair or replace as necessary.

Condition	Possible Causes	Action
Harsh shifts in all gears	• Engine mounts loose. • Front wheel driveshaft and joint. • Line pressure incorrect. • Main control valve body. • Sticking accumulator piston.	• Replace/repair as necessary. • Replace/repair as necessary. • Perform line pressure test. • Inspect valve body. Repair or replace as necessary. • Inspect accumulator piston.
Soft shifts in all gears.	• ATF level. • Line pressure incorrect. • Sticking accumulator piston. • Main control valve body. • Oil pump worn. • Internal fluid leak. • Primary regulator valve failure.	• Check the fluid level and fill as necessary. • Perform line pressure test. • Inspect accumulator piston. Repair or replace as necessary. • Inspect valve body. Repair or replace as necessary. • Inspect the oil pump. Repair or replace as necessary. • Inspect the transmission. • Inspect the primary regulator valve.
Erratic shifting or incorrect shifting points.	• ATF level and quality. • Throttle Position (TP) sensor out of range. • Line pressure. • Solenoid valves. • Clutches slipping.	• Check the fluid level and condition and fill as necessary. • Check the TP sensor signal. Replace as necessary. • Perform line pressure test. • Inspect the solenoid valves. • Inspect the clutches.
Improper torque converter lockup	• Throttle position (TP) sensor out of range. • Solenoid valves.	• Check the TP sensor signal. • Inspect the solenoid valves. Replace as required. • Inspect the torque converter. Replace as necessary.
Skipping Gears.	• Transmission fluid temperature (TFT) sensor. • Main control valve body. • Solenoid valves.	• Inspect TFT sensor. Replace as necessary. • Inspect the valve body. Replace as necessary. • Inspect the solenoid valves. Replace as necessary.
Transaxle overheating.	• ATF level. • Restriction in fluid cooler lines. • Worn clutches.	• Check fluid level and fill as necessary. • Repair or replace the cooler lines. • Inspect the clutches.
Engine stalls when put in gear.	• Main control valve body. • Solenoid valves. • Torque converter. • Oil pump.	• Inspect the clutches. • Inspect the main control valve body. • Inspect the solenoid valves. • Inspect the torque converter. Replace as necessary. • Inspect the oil pump. Repair or replace as necessary.
No kickdown	• Main control valve body.	• Inspect the main control body.
Poor fuel economy.	• Linear solenoid valve.	• Inspect the liner solenoid valve. Replace as necessary.
Surges while cruising.	• Linear solenoid valve. • Main control valve body.	• Inspect the linear solenoid valve. Replace as necessary. • Inspect the main control valve body. Repair or replace as necessary.

Condition	Possible Causes	Action
No 1–2 upshift.	● Solenoid valve. ● Main control valve body. ● One-way clutch.	● Inspect the main control valve body. Repair or replace as necessary. ● Inspect the solenoid valves. ● Inspect the one-way clutch. Replace as necessary.
No 2–3 upshift	● Solenoid valve. ● Main control valve body. ● One-way clutch.	● Inspect the main control valve body. Repair or replace as necessary. ● Inspect the solenoid valves. Replace as necessary. ● Inspect the one-way clutch. Replace as necessary.
No 3–4 upshift	● Solenoid valve. ● Main control valve body. ● TFT sensor.	● Inspect the main control valve body. Repair or replace as necessary. ● Inspect the solenoid valves. Replace as necessary. ● Inspect the TFT sensor. Replace as necessary.
No 4–3 downshift	● Solenoid valve. ● Main control valve body. ● One-way clutch.	● Inspect the main control valve body. Repair or replace as necessary. ● Inspect the solenoid valves. Replace as necessary. ● Inspect the one-way clutch.
No 3–2 downshift	● Solenoid valve. ● Main control valve body. ● Coast clutch.	● Inspect the main control valve body. Repair or replace as necessary. ● Inspect the solenoid valves. Replace as necessary. ● Inspect the coast clutch.
No 2–1 downshift.	● Solenoid valve. ● Main control valve body.	● Inspect the main control valve body. Repair or replace as necessary. ● Inspect the solenoid valves. Replace as necessary.

DIAGNOSTIC TROUBLE CODES

DTC	DESCRIPTION	TYPE	Illuminate MIL
P0604	Internal Control Module Random Access Memory (RAM) Error	B	Yes
P1790	Internal Control Module Random Memory Checksum Error	B	Yes
P0705	Transmission Range Sensor Circuit Malfunction	B	Yes
P0722	Output Speed Sensor Circuit No Signal	B	Yes
P0727	Engine Speed Input Sensor Circuit No Signal	D	No
P0741	TCC System Stuck off	B	Yes
P0742	TCC System Stuck on	B	Yes
P0743	Torque Converter Clutch System (SL) Electrical	B	Yes
P0751	Shift Solenoid A (S1) Performance	B	Yes
P0753	Shift Solenoid A (S1) Electrical	A	Yes
P0756	Shift Solenoid B (S2) Performance	B	Yes
P0758	Shift Solenoid B (S2) Electrical	A	Yes
P0717	Input/Turbine Speed Sensor Circuit No Signal	B	Yes
P0712	Transmission Fluid Temperature Sensor Circuit – Low Input	C2	No*1
P0713	Transmission Fluid Temperature Sensor Circuit – Highr Input	C2	No*1
P0748	Pressure Control Solenoid (STH) Electrical	C1	No*1
P1791	TPS Signal Malfunction	A	Yes
P1701	WT Signal Malfunction	D	No
P1702	Torque Control Signal Malfunction	C1	No*1

✳1 : Illuminate Power Lamp on Instrument Cluster

DTC P0604 – INTERNAL TRANSMISSION CONTROL MODULE (TCM) RANDOM ACCESS MEMORY (ROM) ERROR

Conditions for Setting the DTC

- The transmission control module (TCM) cannot carry out the four RAM initialization routines within 20 milliseconds after ignition ON.

Action Taken When the DTC Sets

- The TCM illuminates the malfunction indicator lamp (MIL) after two consecutive ignition cycles with a failure reported.

Conditions for Clearing the MIL/DTC

- The TCM turns off the MIL after three consecutive ignition cycles without a failure reported.
- The Scan-100 scan tool can clear the DTC from the TCM history.
- The TCM clears the DTC from the TCM history if it can carry out the four RAM initialization routines within 20 milliseconds after ignition ON.

DTC P0604 – Internal Transmission Control Module (TCM) Random Access Memory (RAM) Error

Step	Action	Value(s)	Yes	No
1	1. Turn the ignition OFF. 2. Install the Scan-100 scan tool. 3. With the engine OFF, turn the ignition switch to the RUN position. 4. Select Store Freeze Frame/Failure Records from the Diagnostic Trouble Codes Information menu. 5. Store Freeze Frame/Failure Records. 6. Select Clear DTC Information from the Diagnostic Trouble Codes Information menu. 7. Clear DTC Information. 8. Cycle the ignition two times. Is the Malfunction Indicator Lamp (MIL) ON?	—	Go to Step 2.	Inspect Transmission Control Module (TCM) wiring harness and connector for signs of an intermittent condition. Repair as necessary.
2	1. Select Request DTC by Status from the Diagnostic Trouble Codes Information menu. 2. Request DTC by Status. Is DTC P0604 displayed?	—	Replace the Transmission Control Module (TCM).	Inspect Transmission Control Module (TCM) wiring harness and connector for signs of an intermittent condition. Repair as necessary.

DTC P0705 – TRANSMISSION RANGE (TR) SENSOR CIRCUIT MALFUNCTION (PRNDL INPUT)

Conditions for Setting the DTC

- The transmission control module (TCM) cannot detect a signal from the Transmission Range (TR) sensor circuit for 50 seconds continuously.
- Vehicle speed is greater than 30 Km/h (mph).
- Engine rpm is greater than 1500.
- No OSS DTC P0722.
- No engine speed input sensor DTC P0727.
- The TCM detects more than two equal signals from the TR sensor circuit for 30 seconds continuously.

Action Taken When the DTC Sets

- The TCM illuminates the malfunction indicator lamp (MIL) after two consecutive trips with a failure reported.
- No TCC lockup control.

Conditions for Clearing the MIL/DTC

- The TCM turns off the MIL after three consecutive trips without a failure reported.
- The Scan-100 scan tool can clear the DTC from the TCM history.
- The TCM clears the DTC from the TCM history if it detects one TR sensor signal for greater than 50 seconds.

DTC P0705 – Transmission Range (TR) Sensor Circuit Malfunction (PRNDL Input)

Step	Action	Value(s)	Yes	No
1	1. Turn the ignition OFF. 2. Install the Scan-100 scan tool. 3. With the engine OFF, turn the ignition switch to the RUN position. 4. Select Store Freeze Frame/Failure Records from the Diagnostic Trouble Codes Information menu. 5. Store Freeze Frame/Failure Records. 6.5Select Clear DTC Information from the Diagnostic Trouble Codes Information menu. 7. Clear DTC Information. 8. Perform two vehicle drive cycles. Is the Malfunction Indicator Lamp (MIL) ON?	—	Go to Step 2.	Inspect the transmission control module (TCM) connector, transmission range (TR) sensor connector and the wiring harnesses for signs of an intermittent condition. Repair as necessary.
2	1. Select Request DTC by Status from the Diagnostic Trouble Codes Information menu. 2. Request DTC by Status. Is DTC P0705 displayed?	—	Go to Step 3.	Inspect the transmission control module (TCM) connector, transmission range (TR) sensor connector and the wiring harnesses for signs of an intermittent condition. Repair as necessary.

DTC P0705 – Transmission Range (TR) Sensor Circuit Malfunction (PRNDL Input)

Step	Action	Value(s)	Yes	No
3	1. Select Transmission Data Display from the Data Display Menu. 2. Move the shift control lever through all of the gear ranges (P, R, N, D, 3, L) while observing the Range Status. Does the scan tool display the correct gear ranges?	—	Go to Step 4.	Check the adjustment of the transmission range (TR) sensor. Refer to ”On-Vehicle Service” in this section. If the TR sensor is adjusted properly, replace the TR sensor.
4	1. Turn the ignition OFF. 2. Disconnect the transmission range (TR) sensor connector. 3. With the engine OFF, turn the ignition switch to the RUN position. 4. Measure the voltage at pin 4 (PNK) of the transmission range (TR) sensor female connector. Is the measurement within the specified value?	12 volts	Go to Step 5.	Check Fuse F14 (10A) for an open. If Fuse is OK, Repair open circuit between Fuse F14 and the transmission range (TR) sensor female connector.
5	Measure the voltage of the TR sensor at the transmission control module (TCM) connector with the shift control lever in the positions shown below. **Shift Control Level Position** / **TCM Connector Pin** P – 10 R – 2 N – 25 D – 24 3 – 9 L – 1 Are the measurements within the specified value?	12 volts	Replace the Transmission Control Module (TCM).	If one or more of measurements are not within specifications, repair the circuit(s) as necessary. If all measurements are not within specifications, replace the transmission range (TR) sensor.

DTC P0712 – TRANSMISSION FLUID TEMPERATURE (TFT) SENSOR CIRCUIT LOW INPUT

Conditions for Setting the DTC

- The transmission control module (TCM) detects that the voltage of the transmission fluid temperature (TFT) sensor signal is less than 50 mV for 5 minutes continuously.

Action Taken When the DTC Sets

- The TCM illuminates the power lamp after two consecutive trips with a failure reported.
- No increase in line pressure at low temperature.
- No auto mode change at high temperature.

Conditions for Clearing the MIL/DTC

- The TCM turns off the power lamp after three consecutive trips without a failure reported.
- The Scan-100 scan tool can clear the DTC from the TCM history.
- The TCM clears the DTC from the TCM history if it detects that the ATF temperature is between 0°C and 150°C for 15 minutes continuously.

DTC P0712 – Transmission Fluid Temperature (TFT) Sensor Circuit Low Input

Step	Action	Value(s)	Yes	No
1	1. Turn the ignition OFF. 2. Install the Scan-100 Scan tool. 3. With the engine OFF, turn the ignition switch to the RUN position. 4. Select Store Freeze Frame/Failure Records from the Diagnostic Trouble Codes Information menu. 5. Store Freeze Frame/Failure Records. 6. Select Clear DTC Information from the Diagnostic Trouble Codes Information menu. 7. Clear DTC Information. 8. Perform two vehicle drive cycles. Is the POWER Lamp ON?	—	Go to Step 2.	Inspect the transmission control module (TCM) connector, transmission control module (TCM) sensor connector (C110), transmission fluid temperature (TFT) sensor connector and the wiring harnesses for signs of an intermittent condition. Repair as necessary.
2	1. Select Request DTC by Status from the Diagnostic Trouble Codes Information menu. 2. Request DTC by Status. Is DTC P0712 displayed?	—	Go to Step 3.	Inspect the transmission control module (TCM) connector, transmission control module (TCM) sensor connector (C110), transmission fluid temperature (TFT) sensor connector and the wiring harnesses for signs of an intermittent condition. Repair as necessary.

DTC P0712 – Transmission Fluid Temperature (TFT) Sensor Circuit Low Input

Step	Action	Value(s)	Yes	No
3	1. Disconnect the transmission control module (TCM) sensor (C110) connector. 2. Select Transmission Data Display from the Data Display Menu. 3. With the TCM sensor (C110) connector disconnected, observe the Transmission Fluid Temperature. Does the scan tool display the specified value?	Less than – 40°C	Go to Step 4.	Go to Step 6.
4	Jumper pin 3 (GRN/WHT) to pin 9 (GRY/WHT) in the female TCM sensor (C110) connector and observe the Transmission Fluid Temperature. Does the scan tool display the specified value?	Greater than + 175°C	Go to Step 5.	Go to Step 6.
5	1. Disconnect the transmission fluid temperature (TFT) sensor connector. 2. Measure the resistance between pin 4 (ORN) of the male TCM sensor (C110) connector and pin 2 (ORN) of the TFT sensor connector. 3. Measure the resistance between pin 10 (ORN) of the male TCM sensor (C110) connector and pin 1 (ORN) of the TFT sensor connector. Are the measurements within the specified value?	5 ohms or less	Replace the transmission fluid temperature (TFT) sensor.	Repair the circuit(s) as necessary.
6	1. Disconnect the transmission control module (TCM) connector. 2. Measure the resistance between pin 3 (GRN/WHT) of the female TCM sensor (C110) connector and ground. 3. Measure the resistance between pin 9 (GRY/WHT) of the female TCM sensor (C110) connector and ground. Are the measurements within the specified value?	5 ohms or less	Repair the circuit(s) as necessary.	Replace the transmission control module (TCM).

DTC P0713 – TRANSMISSION FLUID TEMPERATURE (TFT) SENSOR CIRCUIT HIGH INPUT

Conditions for Setting the DTC

- The transmission control module (TCM) detects the voltage difference of the transmission fluid temperature (TFT) sensor signal is less than 75 mV 15 minutes after ignition ON.

Action Taken When the DTC Sets

- The TCM illuminates the power lamp after two consecutive trips with a failure reported.
- No increase in line pressure at low temperature.
- No auto mode change at high temperature.

Conditions for Clearing the MIL/DTC

- The TCM turns off the power lamp after three consecutive trips without a failure reported.
- The Scan-100 scan tool can clear the DTC from the TCM history.
- The TCM clears the DTC from the TCM history if it detects that the ATF temperature is between 0°C and 150°C for 15 minutes continuously.

DTC P0713 – Transmission Fluid Temperature (TFT) Sensor Circuit High Input

Step	Action	Value(s)	Yes	No
1	1. Turn the ignition OFF. 2. Install the Scan-100 Scan tool. 3. With the engine OFF, turn the ignition switch to the RUN position. 4. Select Store Freeze Frame/Failure Records from the Diagnostic Trouble Codes Information menu. 5. Store Freeze Frame/Failure Records. 6. Select Clear DTC Information from the Diagnostic Trouble Codes Information menu. 7. Clear DTC Information. 8. Perform two vehicle drive cycles. Is the POWER Lamp ON?	—	Go to Step 2.	Inspect the transmission control module (TCM) connector, transmission control module (TCM) sensor connector (C110), transmission fluid temperature (TFT) sensor connector and the wiring harnesses for signs of an intermittent condition. Repair as necessary.
2	1. Select Request DTC by Status from the Diagnostic Trouble Codes Information menu. 2. Request DTC by Status. Is DTC P0713 displayed?	—	Go to Step 3.	Inspect the transmission control module (TCM) connector, transmission control module (TCM) sensor connector (C110), transmission fluid temperature (TFT) sensor connector and the wiring harnesses for signs of an intermittent condition. Repair as necessary.

DTC P0713 – Transmission Fluid Temperature (TFT) Sensor Circuit High Input

Step	Action	Value(s)	Yes	No
3	1. Disconnect the transmission control module (TCM) sensor (C110) connector. 2. Select Transmission Data Display from the Data Display Menu. 3. With the TCM sensor (C110) connector disconnected, observe the Transmission Fluid Temperature. Does the scan tool display the specified value?	Less than – 40°C	Go to Step 4.	Go to Step 6.
4	Jumper pin 3 (GRN/WHT) to pin 9 (GRY/WHT) in the female TCM sensor (C110) connector and observe the Transmission Fluid Temperature. Does the scan tool display the specified value?	Greater than + 175°C	Go to Step 5.	Go to Step 6.
5	1. Disconnect the transmission fluid temperature (TFT) sensor connector. 2. Measure the resistance between pin 4 (ORN) of the male TCM sensor (C110) connector and pin 2 (ORN) of the TFT sensor connector. 3. Measure the resistance between pin 10 (ORN) of the male TCM sensor (C110) connector and pin 1 (ORN) of the TFT sensor connector. Are the measurements within the specified value?	5 ohms or less	Replace the transmission fluid temperature (TFT) sensor.	Repair the circuit(s) as necessary.
6	1. Disconnect the transmission control module (TCM) connector. 2. Measure the resistance between pin 3 (GRN/WHT) of the female TCM sensor (C110) connector and pin 31 (GRN/WHT) of the TCM connector. 3. Measure the resistance between pin 9 (GRY/WHT) of the female TCM sensor (C110) connector and pin 30 (GRY/WHT) of the TCM connector. Are the measurements within the specified value?	5 ohms or less	Replace the transmission control module (TCM).	Repair the circuit(s) as necessary.

DTC P0717 – INPUT SHAFT SPEED (ISS) SENSOR CIRCUIT NO SIGNAL

Conditions for Setting the DTC

- The transmission control module (TCM) cannot detect a pulse from the input shaft speed (ISS) sensor while it detects 6 pulses of the output shaft speed (OSS) sensor signal 500 times continuously.

- Output shaft speed (OSS) sensor signal is greater than 7 Km/h (4 mph) in 1st gear, 13 Km/h (8 mph) in 2nd gear, 18 Km/h (11 mph) in 3rd gear or 26 Km/h (16 mph) in 4th gear.
- 10 seconds after Neutral to Drive shift.
- 2.5 seconds after Neutral to Drive shift and ATF temperature is greater than 0°C.
- ISS sensor signal is greater than 66 Km/h (41 mph) 2.5 seconds after Neutral to Drive shift.
- Engine rpm is 400 or greater.
- No TR sensor DTC P0705.
- No TFT sensor DTC P0712 or P0713.
- No engine speed input DTC P0727.

Action Taken When the DTC Sets

- The TCM illuminates the malfunction indicator lamp (MIL) after two consecutive trips with a failure reported.
- No TCC lockup control.
- No torque converter reduction control.
- No line pressure reduction control.

Conditions for Clearing the MIL/DTC

- The TCM turns off the MIL after three consecutive trips without a failure reported.
- The Scan-100 scan tool can clear the DTC from the TCM history.
- The TCM clears the DTC from the TCM history if it detects that the ISS signal is greater than 10 Km/h (mph) for 30 seconds continuously.

DTC P0717 – Input Shaft Speed (ISS) Sensor Circuit No Signal

Step	Action	Value(s)	Yes	No
1	1. Turn the ignition OFF. 2. Install the Scan-100 Scan tool. 3. With the engine OFF, turn the ignition switch to the RUN position. 4. Select Store Freeze Frame/Failure Records from the Diagnostic Trouble Codes Information menu. 5. Store Freeze Frame/Failure Records. 6. Select Clear DTC Information from the Diagnostic Trouble Codes Information menu. 7. Clear DTC Information. 8. Perform two vehicle drive cycles. Is the Malfunction Indicator Lamp (MIL) ON?	—	Go to Step 2.	Inspect the transmission control module (TCM) connector, transmission control module (TCM) sensor connector (C110) and the wiring harnesses for signs of an intermittent condition. Repair as necessary.
2	1. Select Request DTC by Status from the Diagnostic Trouble Codes Information menu. 2. Request DTC by Status. Is DTC P0717 displayed?	—	Go to Step 3.	Inspect the transmission control module (TCM) connector, transmission control module (TCM) sensor connector (C110) and the wiring harnesses for signs of an intermittent condition. Repair as necessary.

DTC P0717 – Input Shaft Speed (ISS) Sensor Circuit No Signal

Step	Action	Value(s)	Yes	No
3	1. Turn the ignition OFF. 2. Disconnect the transmission control module (TCM) connector. 3. Measure the resistance between pin 15 (ORN) and pin 29 (WHT) of the TCM connector. Is the measurement within the specified value?	300–600 ohms	Replace the Transmission Control Module (TCM).	Go to Step 4.
4	1. Disconnect the input shaft speed (ISS) sensor connector. 2. Measure the resistance across the pins of the ISS sensor. Is the measurement within the specified value?	300–600 ohms	Go to Step 5.	Replace the input shaft speed (ISS) sensor.
5	1. Measure the resistance between pin 15 (ORN) of the TCM connector and pin 2 (YEL/BLK) of the ISS sensor connector. 2. Measure the resistance between pin 29 (WHT) of the TCM connector and pin 1 (LT GRN) of the ISS sensor connector. Are the measurements within the specified value?	5 ohms or less	Go to Step 7.	Go to Step 6.
6	1. Disconnect the transmission control module (TCM) sensor (C110) connector. 2. Measure the resistance between pin 15 (ORN) of the TCM connector and pin 2 (ORN) of the TCM sensor connector (C110). 3. Measure the resistance between pin 29 (WHT) of the TCM connector and pin 8 (WHT) of the TCM sensor connector (C110). Are the measurements within the specified value?	5 ohms or less	Repair the circuit(s) as necessary between the TCM sensor connector and the ISS connector.	Repair the circuit(s) as necessary between the TCM connector and the TCM sensor connector.
7	1. Measure the resistance between pin 15 (ORN) of the TCM connector and ground. 2. Measure the resistance between pin 29 (WHT) of the TCM connector and ground. Are the measurements within the specified value?	5 ohms or less	Go to Step 8.	Replace the Transmission Control Module (TCM).
8	1. Disconnect the transmission control module (TCM) sensor (C110) connector. 2. Measure the resistance between pin 2 (ORN) of the TCM sensor connector (C110) and ground. 3. Measure the resistance between pin 8 (WHT) of the TCM sensor connector (C110) and ground. Are the measurements within the specified value?	5 ohms or less	Repair the circuit(s) as necessary between the TCM sensor connector and the ISS connector.	Repair the circuit(s) as necessary between the TCM connector and the TCM sensor connector.

DTC P0722 – OUTPUT SHAFT SPEED (OSS) SENSOR CIRCUIT NO SIGNAL

Conditions for Setting the DTC

- The transmission control module (TCM) cannot detect a pulse from the output shaft speed (OSS) sensor while it detects 10 pulses of the input shaft speed (ISS) sensor signal 500 times continuously.
- Input shaft speed (ISS) sensor signal is greater than 4 Km/h (2 mph).
- 10 seconds after Neutral to Drive shift.
- 2.5 seconds after Neutral to Drive shift and ATF temperature is greater than 0°C.
- OSS sensor signal is greater than 66 Km/h (41 mph) 2.5 seconds after Neutral to Drive shift.
- No TR sensor DTC P0705.
- No TFT sensor DTC P0712 or P0713.

Action Taken When the DTC Sets

- The TCM illuminates the malfunction indicator lamp (MIL) after two consecutive trips with a failure reported.
- The TCM selects ISS signal for vehicle speed.
- No TCC lockup control.
- No torque converter reduction control.
- No line pressure reduction control.

Conditions for Clearing the MIL/DTC

- The TCM turns off the MIL after three consecutive trips without a failure reported.
- The Scan-100 scan tool can clear the DTC from the TCM history.
- The TCM clears the DTC from the TCM history if it detects that the OSS signal is greater than 10 Km/h (mph) for 30 seconds continuously.

DTC P0722 – Output Shaft Speed (OSS) Sensor Circuit No Signal

Step	Action	Value(s)	Yes	No
1	1. Turn the ignition OFF. 2. Install the Scan-100 Scan tool. 3. With the engine OFF, turn the ignition switch to the RUN position. 4. Select Store Freeze Frame/Failure Records from the Diagnostic Trouble Codes Information menu. 5. Store Freeze Frame/Failure Records. 6. Select Clear DTC Information from the Diagnostic Trouble Codes Information menu. 7. Clear DTC Information. 8. Perform two vehicle drive cycles. Is the Malfunction Indicator Lamp (MIL) ON?	—	Go to Step 2.	Inspect the transmission control module (TCM) connector, transmission control module (TCM) sensor connector (C110) and the wiring harnesses for signs of an intermittent condition. Repair as necessary.
2	1. Select Request DTC by Status from the Diagnostic Trouble Codes Information menu. 2. Request DTC by Status. Is DTC P0722 displayed?	—	Go to Step 3.	Inspect the transmission control module (TCM) connector, transmission control module (TCM) sensor connector (C110) and the wiring harnesses for signs of an intermittent condition. Repair as necessary.

DTC P0722 – Output Shaft Speed (OSS) Sensor Circuit No Signal

Step	Action	Value(s)	Yes	No
3	1. Turn the ignition OFF. 2. Disconnect the transmission control module (TCM) connector. 3. Measure the resistance between pin 16 (BLU/GRN) and pin 17 (BLU/YEL) of the TCM connector. Is the measurement within the specified value?	300–600 ohms	Replace the Transmission Control Module (TCM).	Go to Step 4
4	1. Disconnect the output shaft speed (OSS) sensor connector. 2. Measure the resistance across the pins of the OSS sensor. Is the measurement within the specified value?	300–600 ohms	Go to Step 5.	Replace the output shaft speed (OSS) sensor.
5	1. Measure the resistance between pin 16 (BLU/GRN) of the TCM connector and pin 2 (YEL) of the OSS sensor connector. 2. Measure the resistance between pin 17 (BLU/YEL) of the TCM connector and pin 1 (GRY) of the OSS sensor connector. Are the measurements within the specified value?	5 ohms or less	Go to Step 7.	Go to Step 6.
6	1. Disconnect the transmission control module (TCM) sensor (C110) connector. 2. Measure the resistance between pin 16 (BLU/GRN) of the TCM connector and pin 1 (BLU/GRN) of the TCM sensor connector (C110). 3. Measure the resistance between pin 17 (BLU/YEL) of the TCM connector and pin 7 (BLU/YEL) of the TCM sensor connector (C110). Are the measurements within the specified value?	5 ohms or less	Repair the circuit(s) as necessary between the TCM sensor connector and the OSS connector.	Repair the circuit(s) as necessary between the TCM connector and the TCM sensor connector.
7	1. Measure the resistance between pin 16 (BLU/GRN) of the TCM connector and ground. 2. Measure the resistance between pin 17 (BLU/YEL) of the TCM connector and ground. Are the measurements within the specified value?	5 ohms or less	Go to Step 8.	Replace the Transmission Control Module (TCM).
8	1. Disconnect the transmission control module (TCM) sensor (C110) connector. 2. Measure the resistance between pin 1 (BLU/GRN) of the TCM sensor connector (C110) and ground. 3. Measure the resistance between pin 7 (BLU/YEL) of the TCM sensor connector (C110) and ground. Are the measurements within the specified value?	5 ohms or less	Repair the circuit(s) as necessary between the TCM sensor connector and the OSS connector.	Repair the circuit(s) as necessary between the TCM connector and the TCM sensor connector.

DTC P0727 – ENGINE SPEED INPUT CIRCUIT NO SIGNAL

Conditions for Setting the DTC

- The Transmission Control Module (TCM) detects no pulse of the engine speed input sensor while detecting the correct TP sensor signal for 10 seconds continuously.
- No TP sensor DTC P1791.

Action Taken When the DTC Sets

- The TCM stores DTC P0727 after two consecutive trips with a failure reported.

Conditions for Clearing the MIL/DTC

- The Scan-100 scan tool can clear the DTC from the TCM history.
- The TCM clears the DTC from the TCM history if it detects that the engine speed sensor signal is greater than 40 rpm for 20 seconds continuously.

DTC P0727 – Engine Speed Input Circuit No Signal

Step	Action	Value(s)	Yes	No
1	1. Turn the ignition OFF. 2. Install the Scan-100 Scan tool. 3. With the engine OFF, turn the ignition switch to the RUN position. 4. Select Store Freeze Frame/Failure Records from the Diagnostic Trouble Codes Information menu. 5. Store Freeze Frame/Failure Records. 6. Select Clear DTC Information from the Diagnostic Trouble Codes Information menu. 7. Clear DTC Information. 8. Perform two vehicle drive cycles. 9. Select Request DTC by Status from the Diagnostic Trouble Codes Information menu. 10. Request DTC by Status. Is DTC P0727 displayed?	—	Go to Step 2.	Inspect the transmission control module (TCM) connector, engine control module (ECM) J2 (white) connector and the wiring harnesses for signs of an intermittent condition. Repair as necessary.
2	1. Turn the ignition OFF. 2. Disconnect the transmission control module (TCM) connector. 3. Disconnect the engine control module (ECM) J2 (white) connector. 4. Measure the resistance between pin 32 (WHT) of the TCM connector and pin C10 (WHT) of the ECM J2 (white) connector. Is the measurement within the specified value?	5 ohms or less	Go to Step 3.	Repair the circuit as necessary.
3	1. Measure the resistance between pin 32 (WHT) of the TCM connector and ground. Is the measurement within the specified value?	5 ohms or less	Repair the circuit as necessary.	Go to Step 4.
4	1. Connect the ECM J2 (white) connector. 2. Start the engine. 3. Measure the voltage at pin 32 (WHT) of the TCM connector. Is the measurement within the specified value?	12 volts	Replace the transmission control module (TCM).	Replace the powertrain control module (PCM).

DTC P0741 – TORQUE CONVERTER CLUTCH (TCC) CIRCUIT STUCK OFF

Conditions for Setting the DTC

- The transaxle is in 4th gear and the transmission control module (TCM) is commanding the torque converter clutch (TCC) solenoid ON.
- The throttle opening is between 8 and 100%.
- The vehicle speed is between 5 km/h (2 mph) and 100 km/h (62 mph).
- 20 seconds have passed since transaxle was placed in D.
- The brake switch is OFF.
- Engine coolant temperature (ECT) is normal.
- Transmission fluid temperature (TFT) is greater than 20°C.
- Engine rpm is greater than 400.
- No TR sensor DTC P0705.
- No TFT sensor DTC P0712.
- No TFT sensor DTC P0713.
- No 1SS sensor DTC P0717.
- No OSS sensor DTC P0722.
- No engine revolution DTC P0727.
- No TCC Solenoid DTC P0743.
- No SS1 DTC P0753.
- No SS2 DTC P0758.
- No ECT sensor DTC P1701.

Action Taken When the DTC Sets

- The TCM illuminates the Malfunction Indicator Lamp (MIL) after two consecutive trips with a failure reported.

Conditions for Clearing the MIL/DTC

- The TCM turns off the MIL after three consecutive trips without a failure reported.
- The Scan-100 scan tool can clear the DTC from the TCM history.
- The TCM clears the DTC from the TCM history 2 seconds after the transaxle is placed in D.

DTC P0741 – Torque Converter Clutch (TCC) Circuit Stuck Off

Step	Action	Value(s)	Yes	No
1	1. Turn the ignition OFF. 2. Install the Scan-100 Scan tool. 3. With the engine OFF, turn the ignition switch to the RUN position. 4. Select Store Freeze Frame/Failure Records from the Diagnostic Trouble Codes Information menu. 5. Store Freeze Frame/Failure Records. 6. Select Clear DTC Information from the Diagnostic Trouble Codes Information menu. 7. Clear DTC Information. 8. Perform two vehicle drive cycles. Is the Malfunction Indicator Lamp (MIL) ON?	—	Go to Step 2.	Inspect the transmission control module (TCM) connector, transmission control module (TCM) sensor connector (C110) and the wiring harnesses for signs of an intermittent condition. Repair as necessary.
2	1. Select Request DTC by Status from the Diagnostic Trouble Codes Information menu. 2. Request DTC by Status. Is DTC P0741 displayed?	—	Go to Step 3.	Inspect the transmission control module (TCM) connector, transmission control module (TCM) sensor connector (C110) and the wiring harnesses for signs of an intermittent condition. Repair as necessary.
3	1. Turn the ignition OFF. 2. Disconnect the transmission control module (TCM) connector. 3. Measure the resistance between pin 22 (GRN) of the TCM connector and ground. Is the measurement within the specified value?	11–15 ohms	Replace the transmission control module (TCM).	Go to Step 4.

DTC P0741 – Torque Converter Clutch (TCC) Circuit Stuck Off

Step	Action	Value(s)	Yes	No
4	1. Disconnect the transmission control module (TCM) sensor (C110) connector. 2. Measure the resistance between pin 8 (YEL) of the male TCM sensor (C110) connector and ground. Is the measurement within the specified value?	11−15 ohms	Go to Step 5.	Repair the circuit (GRN) between the TCM connector and the female TCM sensor (C110) connector.
5	1. Remove the valve body cover. 2. Disconnect the lockup solenoid connector. 3. Measure the resistance between the lockup solenoid and ground. Is the measurement within the specified value?	11−15 ohms	Repair the circuit (YEL) between the male TCM sensor (C110) connector and the lockup solenoid.	Replace the lockup solenoid.

DTC P0742 – TORQUE CONVERTER CLUTCH (TCC) CIRCUIT STUCK ON

Conditions for Setting the DTC

- The transaxle is in 2nd or 3rd gear and the transmission control module (TCM) is not commanding the torque converter clutch (TCC) solenoid ON.
- The throttle opening is between 20 and 100%.
- The vehicle speed is between 5 km/h (2 mph) and 70 km/h (43 mph).
- 20 seconds have passed since transaxle was placed in D.
- The brake switch is OFF.
- Engine coolant temperature (ECT) is normal.
- Transmission fluid temperature (TFT) is greater than 20°C.
- Engine rpm is greater than 400.
- No TR sensor DTC P0705.
- No TFT sensor DTC P0712.
- No TFT sensor DTC P0713.
- No 1SS sensor DTC P0717.
- No OSS sensor DTC P0722.
- No engine revolution DTC P0727.
- No TCC Solenoid DTC P0743.
- No SS1 DTC P0753.
- No SS2 DTC P0758.
- No ECT sensor DTC P1701.

Action Taken When the DTC Sets

- The TCM illuminates the Malfunction Indicator Lamp (MIL) after two consecutive trips with a failure reported.

Conditions for Clearing the MIL/DTC

- The TCM turns off the MIL after three consecutive trips without a failure reported.
- The Scan-100 scan tool can clear the DTC from the TCM history.
- The TCM clears the DTC from the TCM history 2 seconds after the transaxle is placed in D.

DTC P0742 – Torque Converter Clutch (TCC) Circuit Stuck On

Step	Action	Value(s)	Yes	No
1	1. Turn the ignition OFF. 2. Install the Scan-100 Scan tool. 3. With the engine OFF, turn the ignition switch to the RUN position. 4. Select Store Freeze Frame/Failure Records from the Diagnostic Trouble Codes Information menu. 5. Store Freeze Frame/Failure Records. 6. Select Clear DTC Information from the Diagnostic Trouble Codes Information menu. 7. Clear DTC Information. 8. Perform two vehicle drive cycles. Is the Malfunction Indicator Lamp (MIL) ON?	—	Go to Step 2.	Inspect the transmission control module (TCM) connector, transmission control module (TCM) sensor connector (C110) and the wiring harnesses for signs of an intermittent condition. Repair as necessary.
2	1. Select Request DTC by Status from the Diagnostic Trouble Codes Information menu. 2. Request DTC by Status. Is DTC P0742 displayed?	—	Go to Step 3.	Inspect the transmission control module (TCM) connector, transmission control module (TCM) sensor connector (C110) and the wiring harnesses for signs of an intermittent condition. Repair as necessary.3

DTC P0742 – Torque Converter Clutch (TCC) Circuit Stuck On

Step	Action	Value(s)	Yes	No
3	1. Turn the ignition OFF. 2. Disconnect the transmission control module (TCM) connector. 3. Measure the resistance between pin 22 (GRN) of the TCM connector and ground. Is the measurement within the specified value?	11−15 ohms	Replace the transmission control module (TCM).	Go to Step 4.
4	1. Disconnect the transmission control module (TCM) sensor (C110) connector. 2. Measure the resistance between pin 8 (YEL) of the male TCM sensor (C110) connector and ground. Is the measurement within the specified value?	11−15 ohms	Go to Step 5.	Repair the circuit (GRN) between the TCM connector and the female TCM sensor (C110) connector.
5	1. Remove the valve body cover. 2. Disconnect the lockup solenoid connector. 3. Measure the resistance between the lockup solenoid and ground. Is the measurement within the specified value?	11−15 ohms	Repair the circuit between the male TCM sensor (C110) connector and the lockup solenoid.	Replace the lockup solenoid.

DTC P0743 – TORQUE CONVERTER CLUTCH (TCC) CIRCUIT ELECTRICAL

Conditions for Setting the DTC

- The transmission control module (TCM) detects an OFF signal from the lockup solenoid monitor for 630 milliseconds when the lockup solenoid driver outputs the ON signal.
- The TCM detects an ON signal from the lockup solenoid monitor for 500 milliseconds when the lockup solenoid driver outputs the OFF signal.

Action Taken When the DTC Sets

- The TCM illuminates the Malfunction Indicator Lamp (MIL) after two consecutive trips with a failure reported.
- No TCC lockup control.

Conditions for Clearing the MIL/DTC

- The TCM turns off the MIL after three consecutive trips without a failure reported.
- The Scan-100 scan tool can clear the DTC from the TCM history.
- The TCM clears the DTC from the TCM history if it does not detect a failure for 1 second.

DTC P0743 – Torque Converter Clutch (TCC) Circuit Electrical

Step	Action	Value(s)	Yes	No
1	1. Turn the ignition OFF. 2. Install the Scan-100 Scan tool. 3. With the engine OFF, turn the ignition switch to the RUN position. 4. Select Store Freeze Frame/Failure Records from the Diagnostic Trouble Codes Information menu. 5. Store Freeze Frame/Failure Records. 6. Select Clear DTC Information from the Diagnostic Trouble Codes Information menu. 7. Clear DTC Information. 8. Perform two vehicle drive cycles. Is the Malfunction Indicator Lamp (MIL) ON?	—	Go to Step 2.	Inspect the transmission control module (TCM) connector, transmission control module (TCM) sensor connector (C110) and the wiring harnesses for signs of an intermittent condition. Repair as necessary.
2	1. Select Request DTC by Status from the Diagnostic Trouble Codes Information menu. 2. Request DTC by Status. Is DTC P0743 displayed?	—	Go to Step 3.	Inspect the transmission control module (TCM) connector, transmission control module (TCM) sensor connector (C110) and the wiring harnesses for signs of an intermittent condition. Repair as necessary.
3	1. Turn the ignition OFF. 2. Disconnect the transmission control module (TCM) connector. 3. Measure the resistance between pin 22 (GRN) of the TCM connector and ground. Is the measurement within the specified value?	11–15 ohms	Replace the transmission control module (TCM).	Go to Step 4.

DTC P0743 – TORQUE CONVERTER CLUTCH (TCC) CIRCUIT ELECTRICAL

Step	Action	Value(s)	Yes	No
4	1. Remove the valve body cover. 2. Disconnect the lockup solenoid connector. 3. Measure the resistance between the lockup solenoid connector and pin 22 (GRN) of the TCM connector. Is the measurement within the specified value?	5 ohms or less	Go to Step 6.	Go to Step 5.
5	1. Disconnect the transmission control module (TCM) sensor (C110) connector. 2. Measure the resistance between pin 8 (YEL) of the male TCM sensor (C110) connector and the lockup solenoid connector. Is the measurement within the specified value?	5 ohms or less	Repair the circuit between the TCM connector and the female TCM sensor (C110) connector.	Repair the circuit between the male TCM sensor (C110) connector and the lockup solenoid connector.
6	1. Measure the resistance between pin 22 (GRN) of the TCM connector and ground. Is the measurement within the specified value?	5 ohms or less	Go to Step 7.	Replace the lockup solenoid.
7	1. Disconnect the transmission control module (TCM) sensor (C110) connector. 2. Measure the resistance between pin 8 (YEL) of the male TCM sensor (C110) connector and ground. Is the measurement within the specified value?	5 ohms or less	Repair the circuit between the male TCM sensor (C110) connector and the lockup solenoid connector.	Repair the circuit between the TCM connector and the female TCM sensor (C110) connector.

DTC P0748 – PRESSURE CONTROL (LINEAR) SOLENOID ELECTRICAL

Conditions for Setting the DTC

- The transmission control module (TCM) detects that the current of the pressure control (linear) solenoid is less than 10 mA for 12.5 seconds continuously when the TCM output current is greater than 60 mA.
- The TCM detects that the current of the linear solenoid is greater than 1.4A for 0.5 second continuously.

Action Taken When the DTC Sets

- The TCM illuminates the power lamp after a failure report.
- 4th gear is held in “D” range.
- 4th gear is held in “3” range.
- 1st gear is held in “L” range.
- No TCC lockup control.
- Full line pressure.

Conditions for Clearing the MIL/DTC

- The TCM turns off the MIL after three consecutive trips without a failure reported.
- The Scan-100 scan tool can clear the DTC from the TCM history.
- The TCM clears the DTC from the TCM history when it detects that the current of the pressure control (linear) solenoid is between 0.1 and 1.4A for 12.5 seconds continuously.

DTC P0748 – Pressure Control (Linear) Solenoid Electrical

Step	Action	Value(s)	Yes	No
1	1. Turn the ignition OFF. 2. Install the Scan-100 Scan tool. 3. With the engine OFF, turn the ignition switch to the RUN position. 4. Select Store Freeze Frame/Failure Records from the Diagnostic Trouble Codes Information menu. 5. Store Freeze Frame/Failure Records. 6. Select Clear DTC Information from the Diagnostic Trouble Codes Information menu. 7. Clear DTC Information. 8. Perform one vehicle drive cycle. Is the POWER Lamp ON?	—	Go to Step 2.	Inspect the transmission control module (TCM) connector, transmission control module (TCM) sensor connector (C110) and the wiring harnesses for signs of an intermittent condition. Repair as necessary.
2	1. Select Request DTC by Status from the Diagnostic Trouble Codes Information menu. 2. Request DTC by Status. Is DTC P0748 displayed?	—	Go to Step 3.	Inspect the transmission control module (TCM) connector, transmission control module (TCM) sensor connector (C110) and the wiring harnesses for signs of an intermittent condition. Repair as necessary.
3	1. Turn the ignition OFF. 2. Disconnect the transmission control module (TCM) connector. 3. Measure the resistance between pin 5 (ORN/BLK) and pin 6 (YEL/BLK) of the TCM connector. Is the measurement within the specified value?	2–6 ohms	Replace the transmission control module (TCM).	Go to Step 4.

DTC P0748 – Pressure Control (Linear) Solenoid Electrical

Step	Action	Value(s)	Yes	No
4	1. Remove the valve body cover. 2. Disconnect the pressure control (linear) solenoid connector. 3. Measure the resistance between pin 1 (BRN) of the linear solenoid and pin 6 (YEL/BLK) of the TCM connector. 4. Measure the resistance between pin 2 (BLU) of the linear solenoid and pin 5 (ORN/BLK) of the TCM connector. Are the measurements within the specified value?	5 ohms or less	Go to Step 6.	Go to Step 5.
5	1. Disconnect the transmission control module (TCM) sensor (C110) connector. 2. Measure the resistance between pin 1 (BRN) of the linear solenoid and pin 3 (BRN) of the male TCM sensor connector. 3. Measure the resistance between pin 2 (BLU) of the linear solenoid and pin 9 (BLU) of the male TCM sensor connector. Are the measurements within the specified value?	5 ohms or less	Repair the circuit(s) between the TCM connector and the female TCM sensor connector.	Repair the circuit(s) between the male TCM sensor connector and the linear solenoid.
6	1. Measure the resistance between pin 1 (BRN) of the linear solenoid and ground. 2. Measure the resistance between pin 2 (BLU) of the linear solenoid and ground. Are the measurements within the specified value?	5 ohms or less	Go to Step 7.	Go to Step 8.
7	1. Disconnect the transmission control module (TCM) sensor (C110) connector. 2. Measure the resistance between pin 1 (BRN) of the linear solenoid and ground. 3. Measure the resistance between pin 2 (BLU) of the linear solenoid ground. Is the measurement within the specified value?	5 ohms or less	Repair the circuit(s) between the male TCM sensor connector and the linear solenoid.	Repair the circuit(s) between the TCM connector and the female TCM sensor connector.
8	1. Measure the voltage between pin 1 (BRN) of the linear solenoid and 6 (YEL/BLK) of the TCM connector. 2. Measure the voltage between pin 2 (BLU) of the linear solenoid and pin 5 (ORN/BLK) of the TCM connector. Are the measurements within the specified value?	12 volts	Go to Step 9.	Replace the linear solenoid.
9	1. Disconnect the transmission control module (TCM) sensor (C110) connector. 2. Measure the voltage between pin 1 (BRN) of the linear solenoid and pin 3 (BRN) of the male TCM sensor connector. 3. Measure the voltage between pin 2 (BLU) of the linear solenoid and pin 9 (BLU) of the male TCM sensor connector. Are the measurements within the specified value?	12 volts	Repair the circuit(s) between the male TCM sensor connector and the linear solenoid.	Repair the circuit(s) between the TCM connector and the female TCM sensor connector.

DTC P0751 – SHIFT SOLENOID 1 (SS1) STUCK OFF

Conditions for Setting the DTC

- The transaxle is in 2nd or 3rd gear.
- The throttle opening is between 8 and 100%.
- The vehicle speed is between 5 km/h (2 mph) and 100 km/h (62 mph).
- 20 seconds have passed since transaxle was placed in D.
- The brake switch is OFF.
- Engine coolant temperature (ECT) is normal.
- Transmission fluid temperature (TFT) is greater than 20°C.
- Engine rpm is greater than 400.
- No TR sensor DTC P0705.
- No TFT sensor DTC P0712.
- No TFT sensor DTC P0713.
- No 1SS sensor DTC P0717.
- No OSS sensor DTC P0722.
- No engine revolution DTC P0727.
- No TCC Solenoid DTC P0743.
- No SS1 DTC P0753.
- No SS2 DTC P0758.
- No ECT sensor DTC P1701.

Action Taken When the DTC Sets

- The TCM illuminates the Malfunction Indicator Lamp (MIL) after two consecutive trips with a failure reported.
- No TCC lockup control.
- No torque control reduction.
- No line pressure reduction control.

Conditions for Clearing the MIL/DTC

- The TCM turns off the MIL after three consecutive trips without a failure reported.
- The Scan-100 scan tool can clear the DTC from the TCM history.
- The TCM clears the DTC from the TCM history 2 seconds after the transaxle is placed in D.

DTC P0751 – Shift Solenoid 1 (SS1) Stuck Off

Step	Action	Value(s)	Yes	No
1	1. Turn the ignition OFF. 2. Install the Scan–100 Scan tool. 3. With the engine OFF, turn the ignition switch to the RUN position. 4. Select Store Freeze Frame/Failure Records from the Diagnostic Trouble Codes Information menu. 5. Store Freeze Frame/Failure Records. 6. Select Clear DTC Information from the Diagnostic Trouble Codes Information menu. 7. Clear DTC Information. 8. Perform two vehicle drive cycles. Is the Malfunction Indicator Lamp (MIL) ON?	—	Go to Step 2.	Inspect the transmission control module (TCM) connector, transmission control module (TCM) sensor connector (C110) and the wiring harnesses for signs of an intermittent condition. Repair as necessary.
2	1. Select Request DTC by Status from the Diagnostic Trouble Codes Information menu. 2. Request DTC by Status. Is DTC P0751 displayed?	—	Go to Step 3.	Inspect the transmission control module (TCM) connector, transmission control module (TCM) sensor connector (C110) and the wiring harnesses for signs of an intermittent condition. Repair as necessary.
3	1. Turn the ignition OFF. 2. Disconnect the transmission control module (TCM) connector. 3. Measure the resistance between pin 8 (RED) of the TCM connector and ground. Is the measurement within the specified value?	11–15 ohms	Replace the transmission control module (TCM).	Go to Step 4.

DTC P0751 – Shift Solenoid 1 (SS1) Stuck Off

Step	Action	Value(s)	Yes	No
4	1. Disconnect the transmission control module (TCM) sensor (C110) connector. 2. Measure the resistance between pin 1 (WHT) of the male TCM sensor (C110) connector and ground. Is the measurement within the specified value?	11−15 ohms	Go to Step 5.	Repair the circuit (RED) between the TCM connector and the female TCM sensor (C110) connector.
5	1. Remove the valve body cover. 2. Disconnect the shift solenoid 1 connector. 3. Measure the resistance between the shift solenoid 1 and ground. Is the measurement within the specified value?	11−15 ohms	Repair the circuit (WHT) between the male TCM sensor (C110) connector and the shift solenoid 1.	Replace the shift solenoid 1.

DTC P0753 – SHIFT SOLENOID 1 (SS1) ELECTRICAL

Conditions for Setting the DTC

- The transmission control module (TCM) detects an OFF signal from the shift solenoid 1 (SS1) monitor for 300 milliseconds when the SS1 driver outputs the ON signal.
- The TCM detects an ON signal from the SS1 monitor for 500 milliseconds when the SS1 driver outputs the OFF signal.

Action Taken When the DTC Sets

- The TCM illuminates the Malfunction Indicator Lamp (MIL) after two consecutive trips with a failure reported.
- 4th gear is held in “D” range.
- 4th gear is held in “3” range.
- 1st gear is held in “L” range.
- No TCC lockup control.
- Full line pressure.

Conditions for Clearing the MIL/DTC

- The TCM turns off the MIL after three consecutive trips without a failure reported.
- The Scan-100 scan tool can clear the DTC from the TCM history.
- The TCM clears the DTC from the TCM history if it does not detect a failure for 1 second.

DTC P0753 – Shift Solenoid 1 (SS1) Electrical

Step	Action	Value(s)	Yes	No
1	1. Turn the ignition OFF. 2. Install the Scan-100 Scan tool. 3. With the engine OFF, turn the ignition switch to the RUN position. 4. Select Store Freeze Frame/Failure Records from the Diagnostic Trouble Codes Information menu. 5. Store Freeze Frame/Failure Records. 6. Select Clear DTC Information from the Diagnostic Trouble Codes Information menu. 7. Clear DTC Information. 8. Perform one vehicle drive cycle. Is the Malfunction Indicator Lamp (MIL) ON?	—	Go to Step 2.	Inspect the transmission control module (TCM) connector, transmission control module (TCM) sensor connector (C110) and the wiring harnesses for signs of an intermittent condition. Repair as necessary.
2	1. Select Request DTC by Status from the Diagnostic Trouble Codes Information menu. 2. Request DTC by Status. Is DTC P0753 displayed?	—	Go to Step 3.	Inspect the transmission control module (TCM) connector, transmission control module (TCM) sensor connector (C110) and the wiring harnesses for signs of an intermittent condition. Repair as necessary.
3	1. Turn the ignition OFF. 2. Disconnect the transmission control module (TCM) connector. 3. Measure the resistance between pin 8 (RED) of the TCM connector and ground. Is the measurement within the specified value?	11–15 ohms	Replace the transmission control module (TCM).	Go to Step 4.
4	1. Remove the valve body cover. 2. Disconnect the shift solenoid 1 (SS1) connector. 3. Measure the resistance between the SS1 connector and pin 8 (RED) of the TCM connector. Is the measurement within the specified value?	5 ohms or less	Go to Step 6.	Go to Step 5.

DTC P0753 – Shift Solenoid 1 (SS1) Electrical

Step	Action	Value(s)	Yes	No
5	1. Disconnect the transmission control module (TCM) sensor (C110) connector. 2. Measure the resistance between pin 1 (WHT) of the male TCM sensor (C110) connector and the SS1 connector. Is the measurement within the specified value?	5 ohms or less	Repair the circuit (RED) between the TCM connector and the female TCM sensor (C110) connector.	Repair the circuit (WHT) between the male TCM sensor (C110) connector and the shift solenoid 1 connector.
6	Measure the resistance between pin 8 (RED) of the TCM connector and ground. Is the measurement within the specified value?	5 ohms or less	Go to Step 7.	Replace the shift solenoid 1.
7	1. Disconnect the transmission control module (TCM) sensor (C110) connector. 2. Measure the resistance between pin 1 (WHT) of the male TCM sensor (C110) connector and ground. Is the measurement within the specified value?	5 ohms or less	Repair the circuit (WHT) between the male TCM sensor (C110) connector and the shift solenoid 1 connector.	Repair the circuit (RED) between the TCM connector and the female TCM sensor (C110) connector.

DTC P0756 – SHIFT SOLENOID 2 (SS2) STUCK OFF

Conditions for Setting the DTC

- The transaxle is in 1st or 2nd gear.
- The throttle opening is between 8 and 100%.
- The vehicle speed is between 5 km/h (2 mph) and 100 km/h (62 mph).
- 20 seconds have passed since transaxle was placed in D.
- The brake switch is OFF.
- Engine coolant temperature (ECT) is normal.
- Transmission fluid temperature (TFT) is greater than 20°C.
- Engine rpm is greater than 400.
- No TR sensor DTC P0705.
- No TFT sensor DTC P0712.
- No TFT sensor DTC P0713.
- No 1SS sensor DTC P0717.
- No OSS sensor DTC P0722.
- No engine revolution DTC P0727.
- No TCC Solenoid DTC P0743.
- No SS1 DTC P0753.
- No SS2 DTC P0758.
- No ECT sensor DTC P1701.

Action Taken When the DTC Sets

- The TCM illuminates the Malfunction Indicator Lamp (MIL) after two consecutive trips with a failure reported.
- No TCC lockup control.
- No torque control reduction.
- No line pressure reduction control.

Conditions for Clearing the MIL/DTC

- The TCM turns off the MIL after three consecutive trips without a failure reported.
- The Scan-100 scan tool can clear the DTC from the TCM history.
- The TCM clears the DTC from the TCM history 2 seconds after the transaxle is placed in D.

DTC P0756– Shift Solenoid 2 (SS2) Stuck Off

Step	Action	Value(s)	Yes	No
1	1. Turn the ignition OFF. 2. Install the Scan-100 Scan tool. 3. With the engine OFF, turn the ignition switch to the RUN position. 4. Select Store Freeze Frame/Failure Records from the Diagnostic Trouble Codes Information menu. 5. Store Freeze Frame/Failure Records. 6. Select Clear DTC Information from the Diagnostic Trouble Codes Information menu. 7. Clear DTC Information. 8. Perform two vehicle drive cycles. Is the Malfunction Indicator Lamp (MIL) ON?	—	Go to Step 2.	Inspect the transmission control module (TCM) connector, transmission control module (TCM) sensor connector (C110) and the wiring harnesses for signs of an intermittent condition. Repair as necessary.2
2	1. Select Request DTC by Status from the Diagnostic Trouble Codes Information menu. 2. Request DTC by Status. Is DTC P0756 displayed?		Go to Step 3.	Inspect the transmission control module (TCM) connector, transmission control module (TCM) sensor connector (C110) and the wiring harnesses for signs of an intermittent condition. Repair as necessary.
3	1. Turn the ignition OFF. 2. Disconnect the transmission control module (TCM) connector. 3. Measure the resistance between pin 7 (WHT) of the TCM connector and ground. Is the measurement within the specified value?	11–15 ohms	Replace the transmission control module (TCM).	Go to Step 4.

DTC P0756− Shift Solenoid 2 (SS2) Stuck Off

Step	Action	Value(s)	Yes	No
4	1. Disconnect the transmission control module (TCM) sensor (C110) connector. 2. Measure the resistance between pin 7 (BLK) of the male TCM sensor (C110) connector and ground. Is the measurement within the specified value?	11−15 ohms	Go to Step 5.	Repair the circuit (WHT) between the TCM connector and the female TCM sensor (C110) connector.
5	1. Remove the valve body cover. 2. Disconnect the shift solenoid 2 connector. 3. Measure the resistance between the shift solenoid 2 and ground. Is the measurement within the specified value?	11−15 ohms	Repair the circuit (BLK) between the male TCM sensor (C110) connector and the shift solenoid 2.	Replace the shift solenoid 2.

DTC P0758 – SHIFT SOLENOID 2 (SS2) ELECTRICAL

Conditions for Setting the DTC

- The transmission control module (TCM) detects an OFF signal from the shift solenoid 2 (SS2) monitor for 300 milliseconds when the SS2 driver outputs the ON signal.
- The TCM detects an ON signal from the SS2 monitor for 500 milliseconds when the SS2 driver outputs the OFF signal.

Action Taken When the DTC Sets

- The TCM illuminates the Malfunction Indicator Lamp (MIL) after two consecutive trips with a failure reported.
- 4th gear is held in “D” range.
- 4th gear is held in “3” range.
- 1st gear is held in “L” range.
- No TCC lockup control.
- Full line pressure.

Conditions for Clearing the MIL/DTC

- The TCM turns off the MIL after three consecutive trips without a failure reported.
- The Scan-100 scan tool can clear the DTC from the TCM history.
- The TCM clears the DTC from the TCM history if it does not detect a failure for 1 second.

DTC P0758 – Shift Solenoid 2 (SS2) Electrical

Step	Action	Value(s)	Yes	No
1	1. Turn the ignition OFF. 2. Install the Scan-100 Scan tool. 3. With the engine OFF, turn the ignition switch to the RUN position. 4. Select Store Freeze Frame/Failure Records from the Diagnostic Trouble Codes Information menu. 5. Store Freeze Frame/Failure Records. 6. Select Clear DTC Information from the Diagnostic Trouble Codes Information menu. 7. Clear DTC Information. 8. Perform one vehicle drive cycle. Is the Malfunction Indicator Lamp (MIL) ON?	—	Go to Step 2.	Inspect the transmission control module (TCM) connector, transmission control module (TCM) sensor connector (C110) and the wiring harnesses for signs of an intermittent condition. Repair as necessary.
2	1. Select Request DTC by Status from the Diagnostic Trouble Codes Information menu. 2. Request DTC by Status. Is DTC P0758 displayed?	—	Go to Step 3.	Inspect the transmission control module (TCM) connector, transmission control module (TCM) sensor connector (C110) and the wiring harnesses for signs of an intermittent condition. Repair as necessary.
3	1. Turn the ignition OFF. 2. Disconnect the transmission control module (TCM) connector. 3. Measure the resistance between pin 7 (WHT) of the TCM connector and ground. Is the measurement within the specified value?	11–15 ohms	Replace the transmission control module (TCM).	Go to Step 4.
4	1. Remove the valve body cover. 2. Disconnect the shift solenoid 2 (SS2) connector. 3. Measure the resistance between the SS2 connector and pin 7 (WHT) of the TCM connector. Is the measurement within the specified value?	5 ohms or less	Go to Step 6.	Go to Step 5.

DTC P0758 – Shift Solenoid 2 (SS2) Electrical

Step	Action	Value(s)	Yes	No
5	1. Disconnect the transmission control module (TCM) sensor (C110) connector. 2. Measure the resistance between pin 7 (BLK) of the male TCM sensor (C110) connector and the SS2 connector. Is the measurement within the specified value?	5 ohms or less	Repair the circuit (WHT) between the TCM connector and the female TCM sensor (C110) connector.	Repair the circuit (BLK) between the male TCM sensor (C110) connector and the shift solenoid 2 connector.
6	Measure the resistance between pin 7 (WHT) of the TCM connector and ground. Is the measurement within the specified value?	5 ohms or less	Go to Step 7.	Replace the shift solenoid 2.
7	1. Disconnect the transmission control module (TCM) sensor (C110) connector. 2. Measure the resistance between pin 7 (BLK) of the male TCM sensor (C110) connector and ground. Is the measurement within the specified value?	5 ohms or less	Repair the circuit (BLK) between the male TCM sensor (C110) connector and the shift solenoid 2 connector.	Repair the circuit (WHT) between the TCM connector and the female TCM sensor (C110) connector.

DTC P1701 – ENGINE COOLANT TEMPERATURE (ECT) SENSOR CIRCUIT MALFUNCTION

Conditions for Setting the DTC

- The transmission control module (TCM) detects no engine coolant temperature (ECT) signal for 2.5 seconds continuously.

Conditions for Clearing the MIL/DTC

- The Scan-100 scan tool can clear the DTC from the TCM history.
- The TCM clears the DTC from the TCM history if it detects an ECT signal for 2.5 seconds continuously.

DTC P1701 – Engine Coolant Temperature (ECT) Sensor Circuit

Step	Action	Value(s)	Yes	No
1	1. Turn the ignition OFF. 2. Install the Scan-100 Scan tool. 3. With the engine OFF, turn the ignition switch to the RUN position. 4. Select Store Freeze Frame/Failure Records from the Diagnostic Trouble Codes Information menu. 5. Store Freeze Frame/Failure Records. 6. Select Clear DTC Information from the Diagnostic Trouble Codes Information menu. 7. Clear DTC Information. 8. Perform two vehicle drive cycles. 9. Select Request DTC by Status from the Diagnostic Trouble Codes Information menu. 10 Request DTC by Status. Is DTC P1701 displayed?	—	Go to Step 2.	Inspect the transmission control module (TCM) connector, transmission control module (TCM) sensor connector (C110), transmission fluid temperature (TFT) sensor connector and the wiring harnesses for signs of an intermittent condition. Repair as necessary.
2	1. Turn the ignition OFF. 2. Disconnect the transmission control module (TCM) connector. 3. Disconnect the engine control module (ECM) J2 (red) connector. 4. Measure the resistance between pin 33 (BRN) of the TCM connector and pin A16 (BRN) of the ECM J2 (red) connector. Is the measurement within the specified value?	5 ohms or less	Go to Step 3.	Repair the circuit as necessary.
3	Measure the resistance between pin 33 (BRN) of the TCM connector and ground. Is the measurement within the specified value?	5 ohms or less	Repair the circuit as necessary.	Go to Step 4.
4	1. Connect the ECM J2 (red) connector. 2. Start the engine. 3. Measure the voltage at pin 33 (BRN) of the TCM connector. Is the measurement within the specified value?	0.2 volts	Replace the transmission control module (TCM).	Replace the powertrain control module (PCM).

DTC P1702 –TORQUE CONVERTER CLUTCH (TCC) CIRCUIT MALFUNCTION

Conditions for Setting the DTC

- The transmission control module (TCM) detects that the voltage of the torque control line is ground level when the TCM doesn't output the torque control signal for 2.5 seconds continuously.

Action Taken When the DTC Sets

- The TCM illuminates the power lamp after a trip with a failure reported.
- 4th gear is held in "D" range.
- 4th gear is held in "3" range.
- 1st gear is held in "L" range.
- No TCC lockup control.
- Full line pressure.

Conditions for Clearing the MIL/DTC

- The TCM turns off the power lamp after a trip without a failure reported.
- The Scan-100 scan tool can clear the DTC from the TCM history.
- The TCM clears the DTC from the TCM history if it detects that the voltage of the torque control line is not ground level when the TCM doesn't output the torque control signal for 2.5 seconds continuously.

DTC P1702 – Torque Converter Clutch (TCC) Circuit Malfunction

Step	Action	Value(s)	Yes	No
1	1. Turn the ignition OFF. 2. Install the Scan-100 Scan tool. 3. With the engine OFF, turn the ignition switch to the RUN position. 4. Select Store Freeze Frame/Failure Records from the Diagnostic Trouble Codes Information menu. 5. Store Freeze Frame/Failure Records. 6. Select Clear DTC Information from the Diagnostic Trouble Codes Information menu. 7. Clear DTC Information. 8. Perform one vehicle drive cycle. Is the POWER Lamp ON?	—	Go to Step 2.	Inspect the transmission control module (TCM) connector, transmission control module (TCM) sensor connector (C110) and the wiring harnesses for signs of an intermittent condition. Repair as necessary.
2	1. Select Request DTC by Status from the Diagnostic Trouble Codes Information menu. 2. Request DTC by Status. Is DTC P1702 displayed?	—	Go to Step 3.	Inspect the transmission control module (TCM) connector, transmission control module (TCM) sensor connector (C110) and the wiring harnesses for signs of an intermittent condition. Repair as necessary.
3	1. Turn the ignition OFF. 2. Disconnect the transmission control module (TCM) connector. 3. Disconnect the engine control module (ECM) (blue) connector. 4. Measure the resistance between pin 18 (GRY) of the TCM connector and pin F1 (GRYN) of the ECM (blue) connector. Is the measurement within the specified value?	5 ohms or less	Go to Step 4.	Repair the circuit as necessary.

DTC P1702 – TORQUE CONVERTER CLUTCH (TCC) CIRCUIT MALFUNCTION

Step	Action	Value(s)	Yes	No
4	Measure the resistance between pin 18 (GRY) of the TCM connector and ground. Is the measurement within the specified value?	5 ohms or less	Repair the circuit as necessary.	Go to Step 5.
5	1. Connect the ECM (blue) connector. 2. Start the engine. 3. Measure the voltage at pin 18 (GRY) of the TCM connector. Is the measurement within the specified value?	12 volts	Replace the transmission control module (TCM).	Replace the powertrain control module (PCM).

DTC P1790 – INTERNAL TRANSMISSION CONTROL MODULE (TCM) RANDOM ACCESS MEMORY (RAM) CHECKSUM ERROR

Conditions for Setting the DTC

- The transmission control module (TCM) detects a difference between the calculated checksum data and the real checksum data.

Action Taken When the DTC Sets

- The TCM illuminates the malfunction indicator lamp (MIL) after two consecutive trips with a failure reported.

Conditions for Clearing the MIL/DTC

- The TCM turns off the MIL after three consecutive trips without a failure reported.
- The Scan-100 scan tool can clear the DTC from the TCM history.
- The TCM clears the DTC from the TCM history if it detects that the calculated checksum data is the same as the real checksum data.

DTC P1790 – Internal Transmission Control Module (TCM) Random Access Memory (RAM) Checksum Error

Step	Action	Value(s)	Yes	No
1	1. Turn the ignition OFF. 2. Install the Scan-100 Scan tool. 3. With the engine OFF, turn the ignition switch to the RUN position. 4. Select Store Freeze Frame/Failure Records from the Diagnostic Trouble Codes Information menu. 5. Store Freeze Frame/Failure Records. 6. Select Clear DTC Information from the Diagnostic Trouble Codes Information menu. 7. Clear DTC Information. 8. Perform two vehicle drive cycles. Is the Malfunction Indicator Lamp (MIL) ON?	—	Go to Step 2.	Inspect Transmission Control Module (TCM) wiring harness and connector for signs of an intermittent condition. Repair as necessary.
2	1. Select Request DTC by Status from the Diagnostic Trouble Codes Information menu. 2. Request DTC by Status. Is DTC P1790 displayed?	—	Replace the Transmission Control Module (TCM).	Inspect Transmission Control Module (TCM) wiring harness and connector for signs of an intermittent condition. Repair as necessary.

DTC P1791 – THROTTLE POSITION (TP) SENSOR CIRCUIT MALFUNCTION

Conditions for Setting the DTC

- The transmission control module (TCM) detects a malfunction of the throttle position (TP) sensor signal.
- No TP sensor signal.
- TP sensor duty ratio is less than 2.0%.
- TP sensor duty ratio is more than 98.0%.
- Engine speed is greater than 400 rpm.

Action Taken When the DTC Sets

- The TCM illuminates the malfunction indicator lamp (MIL) after a trip with a failure reported.
- 4th gear is held in “D” range.
- 4th gear is held in “3” range.
- 1st gear is held in “L” range.
- No TCC lockup control.
- Full line pressure.

Conditions for Clearing the MIL/DTC

- The TCM turns off the MIL after a trip without a failure reported.
- The Scan-100 scan tool can clear the DTC from the TCM history.
- The TCM clears the DTC from the TCM history if it detects that the TP sensor duty ratio is between 2.0% and 98.0% for 4 seconds continuously.

DTC P1791 – Throttle Position (TP) Sensor Circuit Malfunction

Step	Action	Value(s)	Yes	No
1	1. Turn the ignition OFF. 2. Install the Scan-100 Scan tool. 3. With the engine OFF, turn the ignition switch to the RUN position. 4. Select Store Freeze Frame/Failure Records from the Diagnostic Trouble Codes Information menu. 5. Store Freeze Frame/Failure Records. 6. Select Clear DTC Information from the Diagnostic Trouble Codes Information menu. 7. Clear DTC Information. 8. Perform one vehicle drive cycle. Is the Malfunction Indicator Lamp (MIL) ON?	—	Go to Step 2.	Inspect the transmission control module (TCM) connector, transmission control module (TCM) sensor connector (C110), transmission fluid temperature (TFT) sensor connector and the wiring harnesses for signs of an intermittent condition. Repair as necessary.
2	1. Select Request DTC by Status from the Diagnostic Trouble Codes Information menu. 2. Request DTC by Status. Is DTC P1791 displayed?	—	Go to Step 3.	Inspect the transmission control module (TCM) connector, transmission control module (TCM) sensor connector (C110), transmission fluid temperature (TFT) sensor connector and the wiring harnesses for signs of an intermittent condition. Repair as necessary.

DTC P1791 – Throttle Position (TP) Sensor Circuit Malfunction

Step	Action	Value(s)	Yes	No
3	1. Turn the ignition OFF. 2. Disconnect the transmission control module (TCM) connector. 3. Disconnect the engine control module (ECM) J2 (red) connector. 4. Measure the resistance between pin 20 (LT GRN) of the TCM connector and pin A11 (LT GRN) of the ECM J2 (red) connector. Is the measurement within the specified value?	5 ohms or less	Go to Step 4.	Repair the circuit as necessary.
4	Measure the resistance between pin 20 (LT GRN) of the TCM connector and ground. Is the measurement within the specified value?	5 ohms or less	Repair the circuit as necessary.	Go to Step 5.
5	1. Connect the ECM J2 (red) connector. 2. Start the engine. 3. Measure the voltage at pin 20 (LT GRN) of the TCM connector. Is the measurement within the specified value?	0.2 volts	Replace the transmission control module (TCM).	Replace the powertrain control module (PCM).

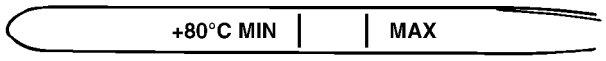

C5A0011A

MAINTENANCE AND REPAIR ON-VEHICLE SERVICE

TRANSAXLE FLUID LEVEL CHECKING PROCEDURE

Notice: Check the fluid level when the transaxle temperature is above 80°C (176°F).

Notice: During the fluid level check, the selector lever must be in position P.

Notice: When adding fluid or making a complete fluid change, always use TOTAL FLUID HX. Failure to use the proper fluid will cause hose and seal damage and fluid leaks.

1. Make sure the vehicle is level.
2. Remove the transaxle fluid dipstick and check the transaxle fluid level.
3. The correct fluid level must be between the MIN and the MAX notches on the dipstick.
4. If the fluid level is below the MIN notch, add transaxle fluid through the fluid filler tube and check for leaks in the transaxle.

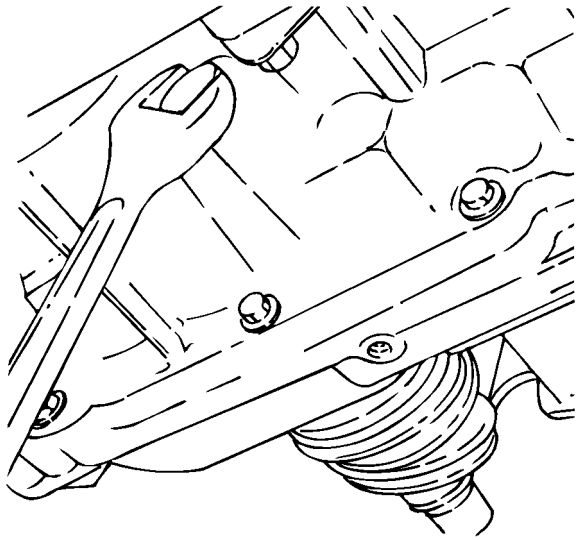

C5A0081A

5. If the fluid is above the MAX notch, the transaxle is overfilled. Drain some of the fluid through the fluid pan drain plug. Check the transaxle fluid level.

FLUID DRAIN PROCEDURE

Draining Procedure

1. Raise and support the vehicle. Refer to “Vehicle Lifting Procedures,” *Section OB, General Information.*
2. Place a suitable fluid drainage container under the transaxle.
3. Remove the fluid drain plug. Allow the fluid to drain completely.
4. Clean the drain plug threads.
5. Install the fluid drain plug.

Tighten

Torque the fluid drain plug to 23-55 N•m (17-40 lb-ft).

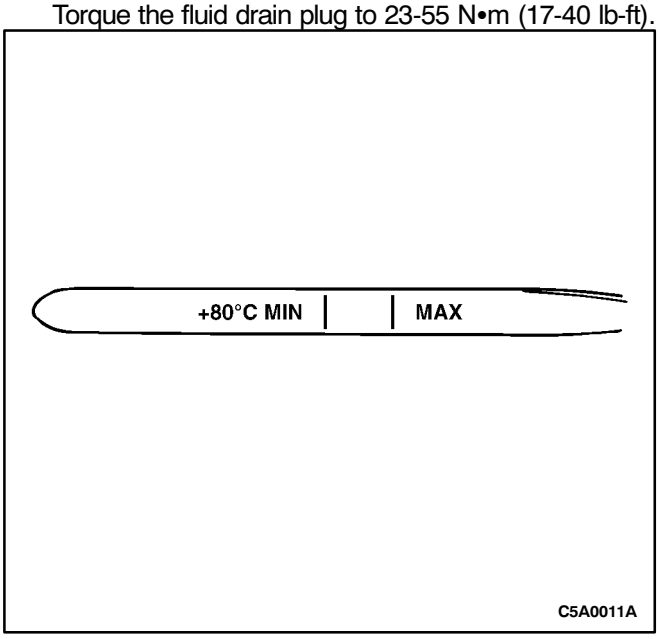

Filling Procedure

1. Remove the drainage container and lower the vehicle.
2. Add three-fourths of the recommended amount of TOTAL FLUID HX.
3. Start the engine and allow it to reach normal operating temperature.
4. Shift the gear selector through all positions.
5. Check the fluid level and add fluid in 0.4 liter (0.5 quart) increments until the dipstick indicates a safe level.

CASE POROSITY REPAIR

1. Determine the leak area. Refer to “Locating Fluid Leaks” in this section.
2. Clean the leak area with the solvent. Air dry.

Caution: Epoxy cement may cause skin irritations and eye damage. Read and follow all information on the container label as provided by the manufacturer.

3. Mix a sufficient amount of epoxy cement following the manufacturer’s recommendations.
4. While the transaxle case is hot, apply epoxy cement with a clean, dry soldering acid brush.
5. Allow the epoxy cement to dry for 3 hours before starting the engine.

FLUID COOLER FLUSHING

Flushing Procedure

1. Drain the fluid from the transaxle and refill the transaxle with new transaxle fluid. Refer to “Fluid Drain Procedure” in this section.
2. Let the engine idle for 5 minutes.
3. Drain the fluid from the transaxle and refill the transaxle with new transaxle fluid. Refer to “Fluid Drain Procedure” in this section.

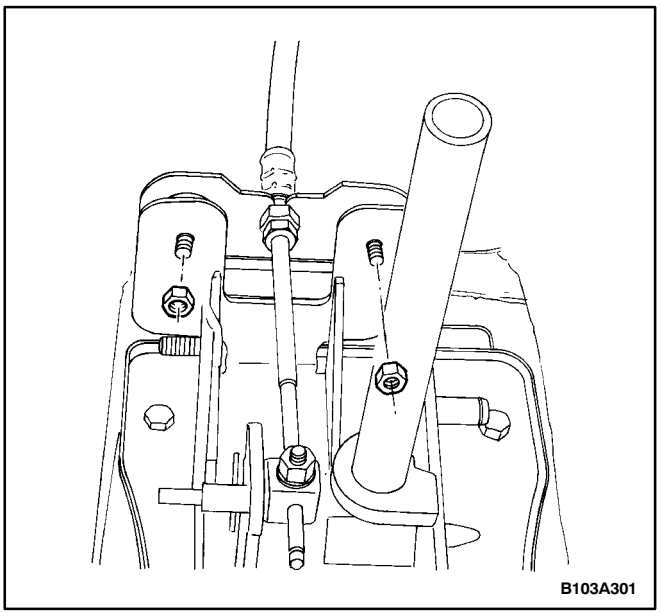

SHIFT CONTROL LEVER

Removal Procedure

1. Disconnect the negative battery cable.
2. Remove the right and the left front lower trim panels, the shift control panel, and the floor console. Refer to *Section 9G, Interior Trim.*
3. Remove the transmission range (TR) switch.
4. Remove the nuts from the shift control cable mounting bracket at the front of the shift control assembly.

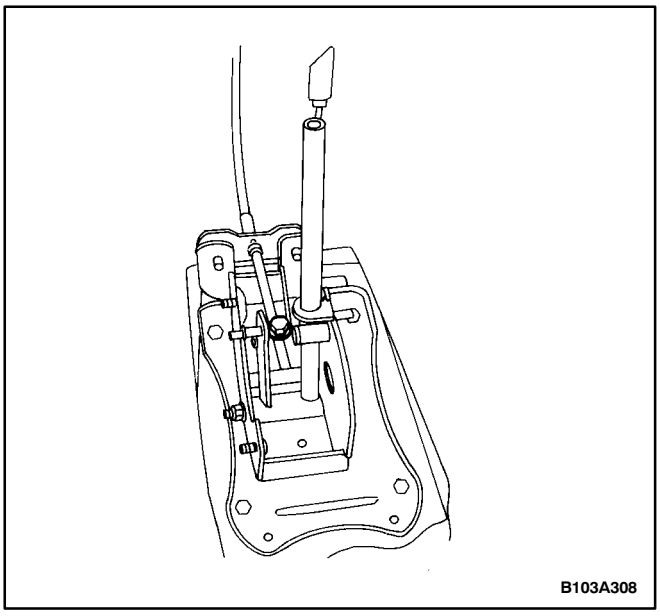

5. Loosen the nut on the shift control cable adjuster pinch bolt.

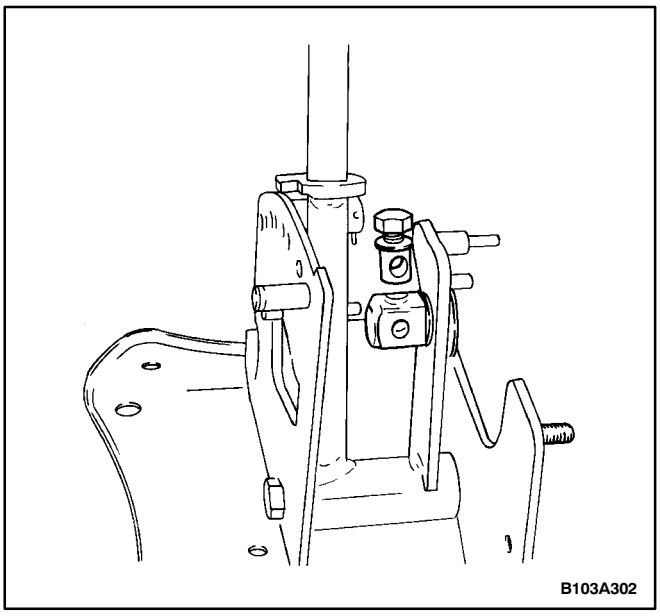

6. Slide the shift control cable out of the shift control cable adjuster and remove the pinch bolt.

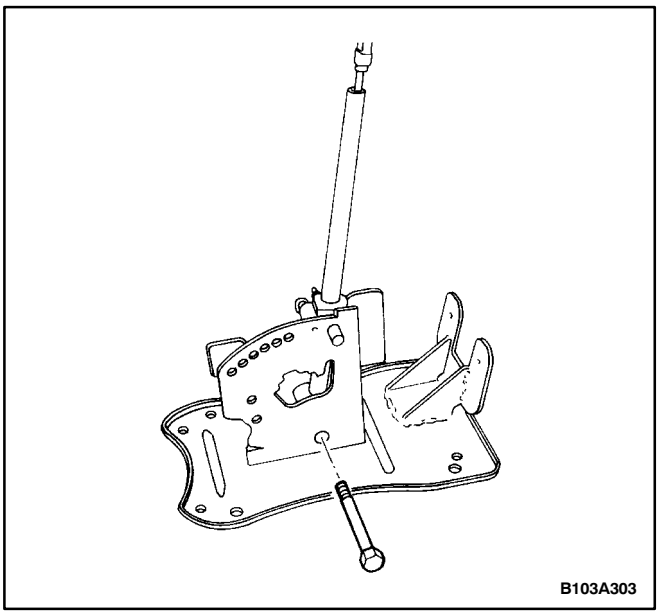

7. Remove the bolt from the bottom of the shift control lever.

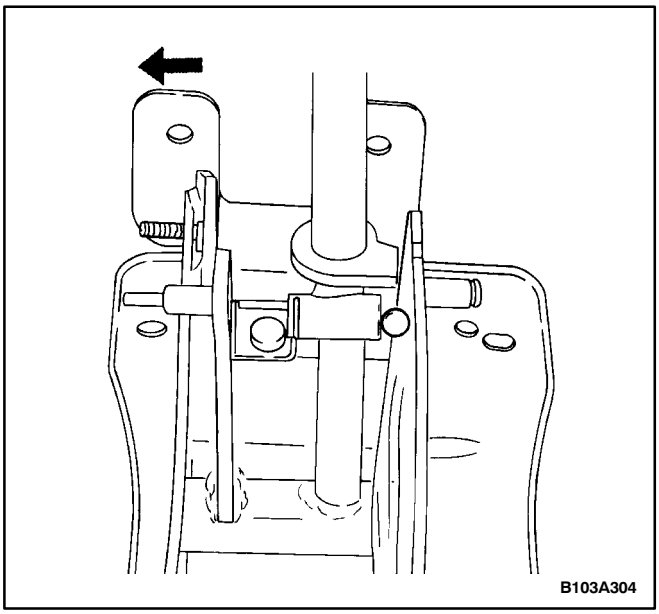

8. Tilt the shift control lever to the left side and remove the spring-loaded detent ball.

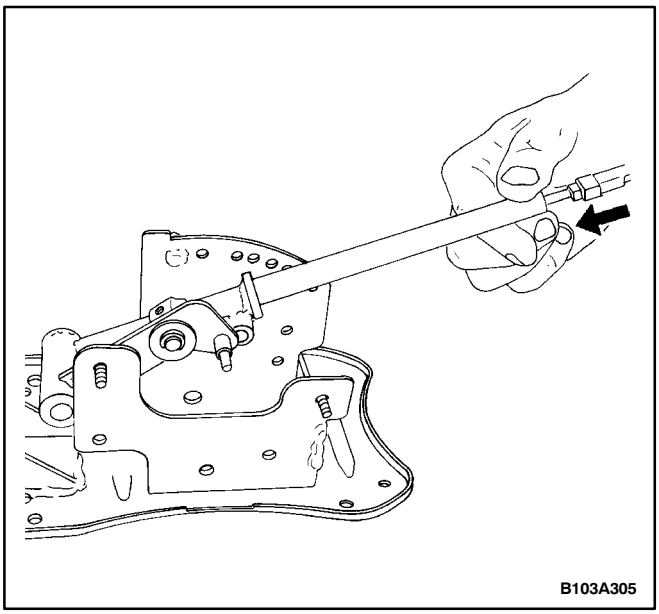

9. Remove the shift control lever by pressing the lock release button while pivoting the bottom of the shift control lever toward the front of the vehicle.

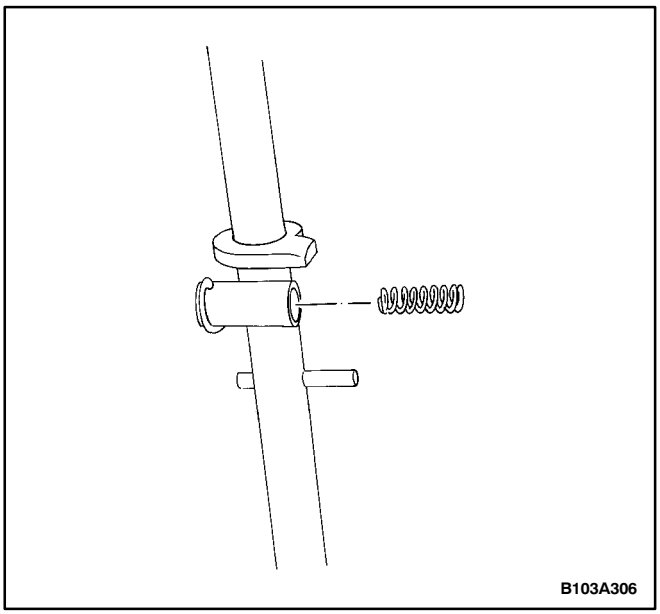

10. Slide the detent spring out of the shift control lever.

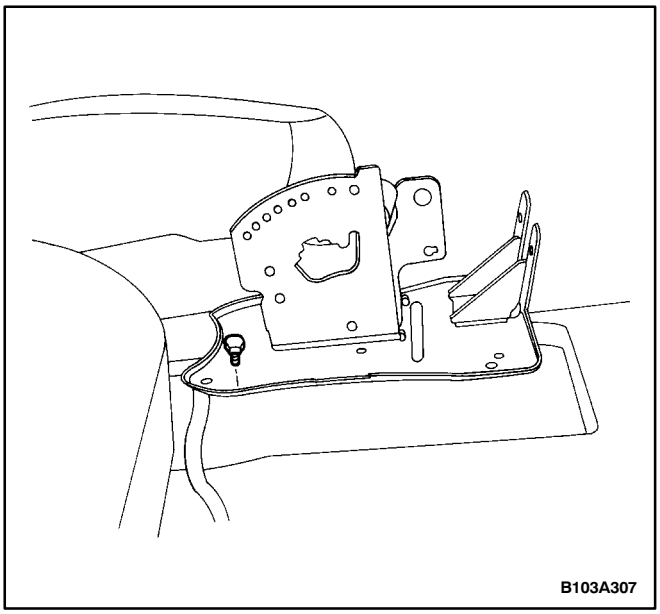

11. Remove the bolts holding the shift control assembly to the floor panel.
12. Remove the shift control assembly.

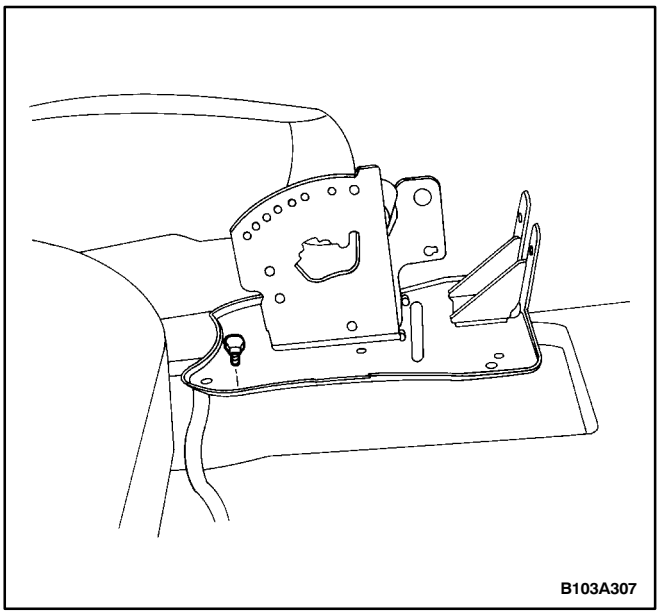

Installation Procedure

1. Install the shift control assembly in the floor panel with the bolts.

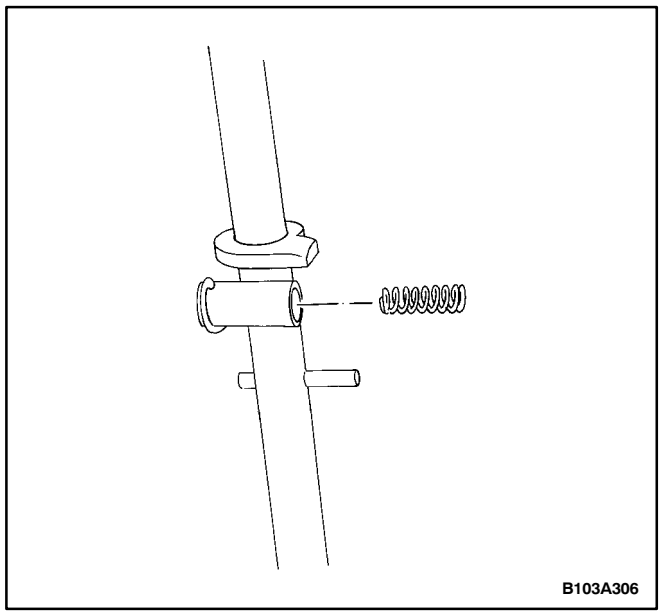

2. Install the detent spring into the shift control lever.

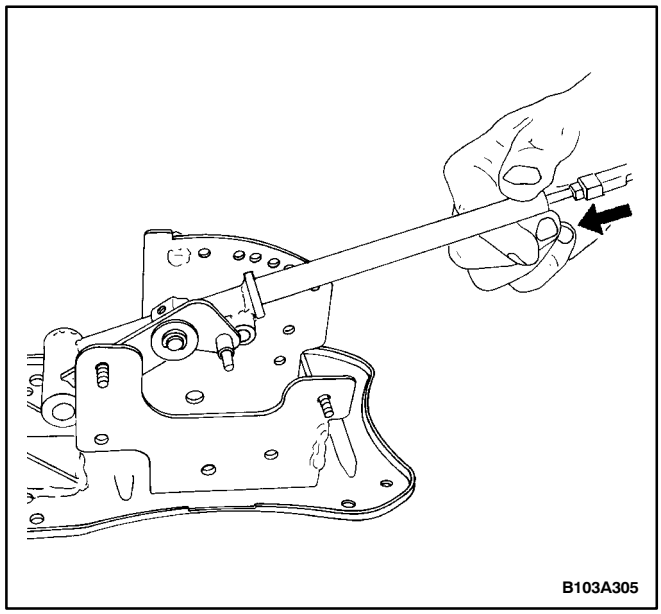

3. Install the shift control lever by pressing the lock release button while pivoting the bottom of the shift control lever toward the rear of the vehicle.

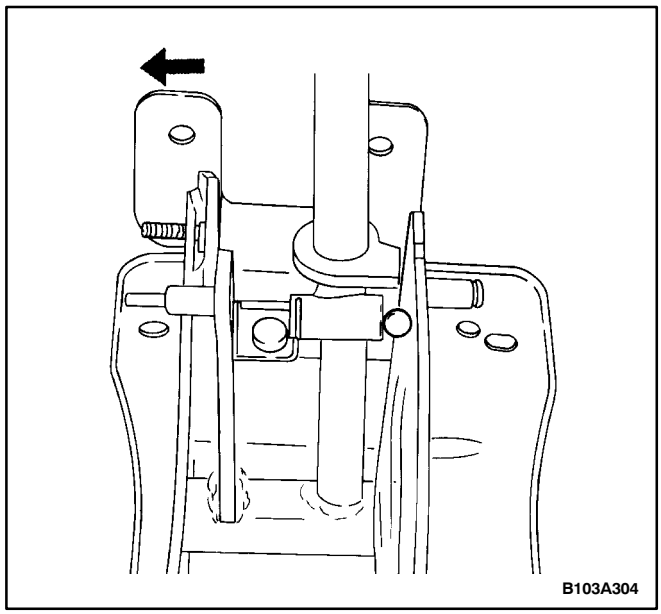

4. Tilt the shift control lever to the left and install the detent ball.

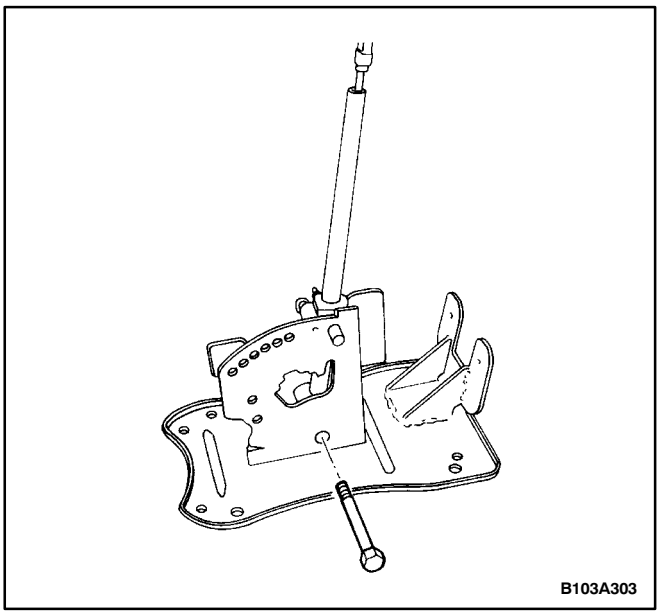

5. Install the bolt in the bottom of the shift control lever.

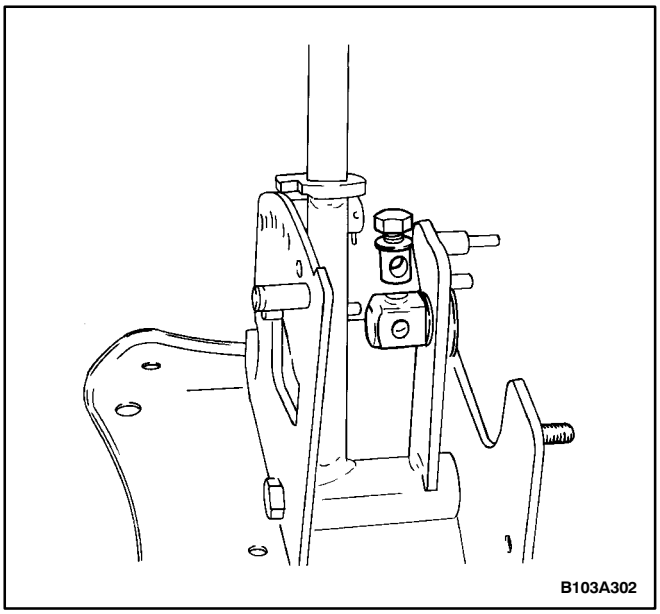

6. Insert the shift control cable adjuster pinch bolt into the shift control assembly and slide the shift control cable in to the shift control cable adjuster.

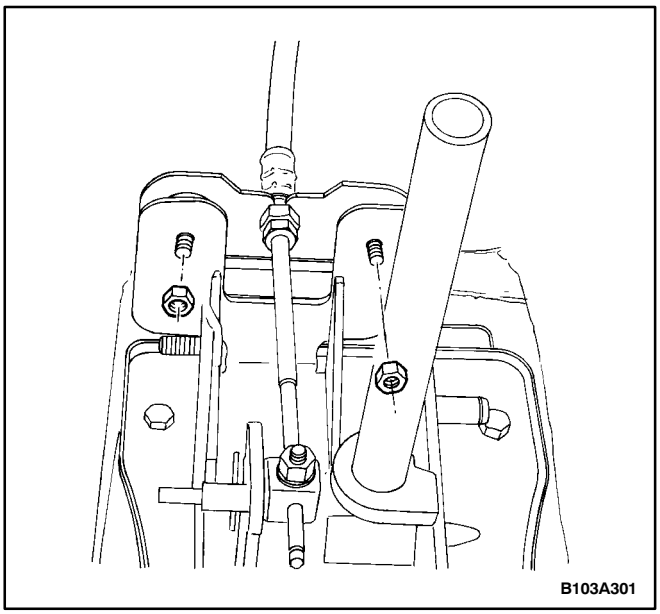

7. Attach the shift control cable mounting bracket to the shift control assembly with the nuts.

Tighten

Tighten the shift control cable mounting bracket nuts to 6 N•m (53 lb-in).

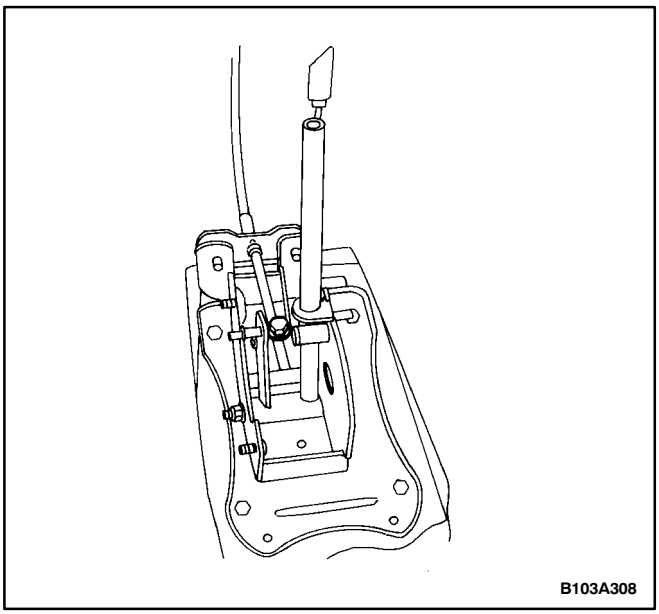

8. Install the nut on the shift control cable adjuster pinch bolt. Refer to “Control Cable Adjustment” in this section.

Tighten

Tighten the shift control cable adjuster pinch bolt nut to 8 N•m (71 lb-in).

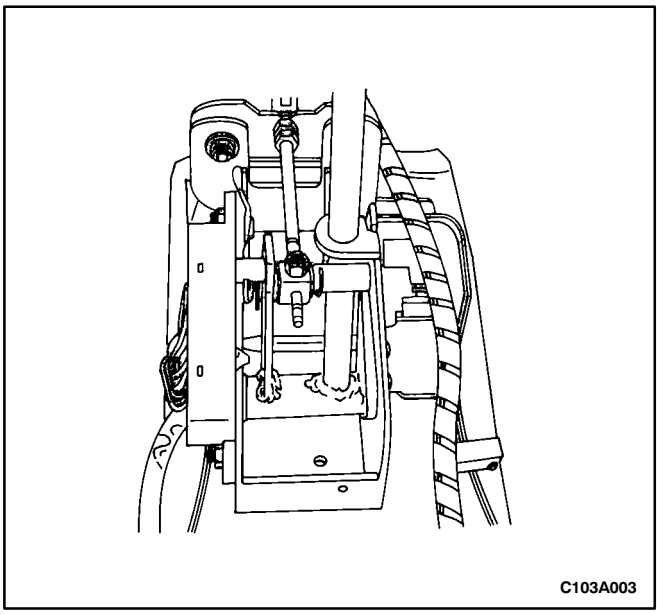

Notice: Make sure the slot in the TR switch is all the way forward and the shift control lever is in the P position. Failure to do so may damage the TR switch and produce a false gear indication.

9. Install the TR switch on the shift control assembly.
10. Install the floor console, the shift control panel, and the right and the left front lower trim panels. Refer to *Section 9G, Interior Trim.*
11. Connect the negative battery cable.

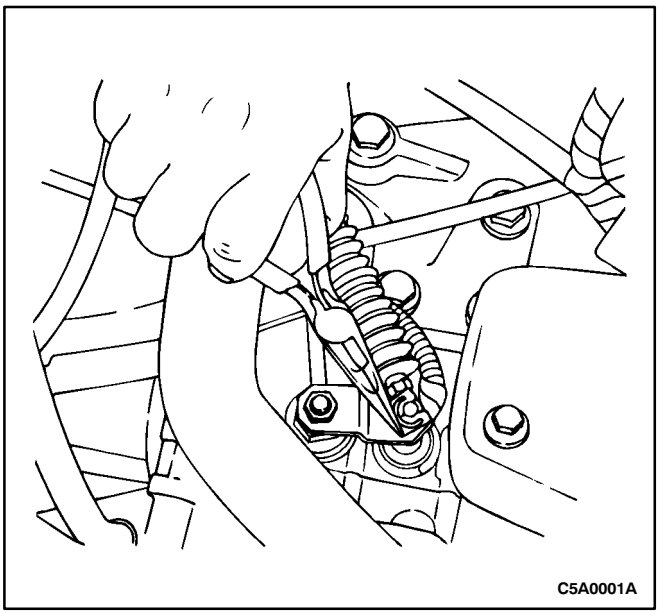

SHIFT CONTROL CABLE

Removal Procedure

1. Remove the battery and the battery tray. Refer to *Section 1E, Engine Electrical.*
2. Remove the retaining clip on the park/neutral position switch, (PNP switch).

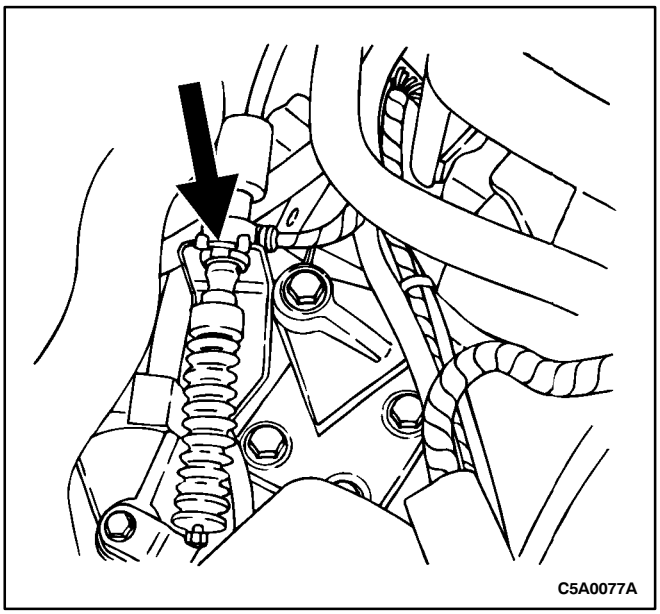

3. Remove the clip on the transaxle case bracket.
4. Remove the shift control cable from the transaxle case bracket.
5. Remove the trim panel from the floor console. Refer to *Section 9G, Interior Trim.*

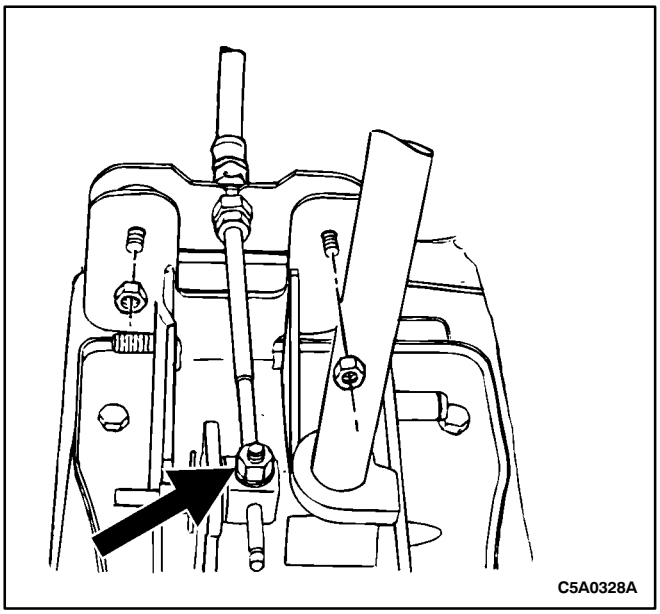

6. Loosen the pinch bolt on the shift control lever.

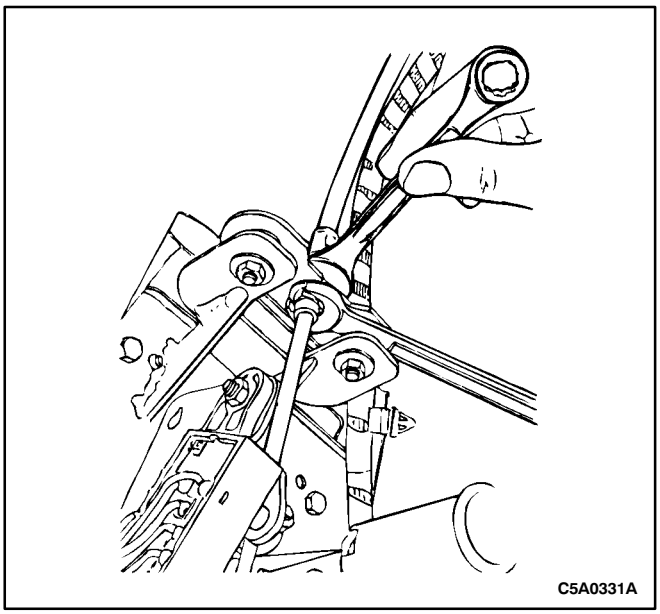

7. Remove the shift control cable from the shift control assembly by holding one nut with a wrench while loosening the other with a wrench.

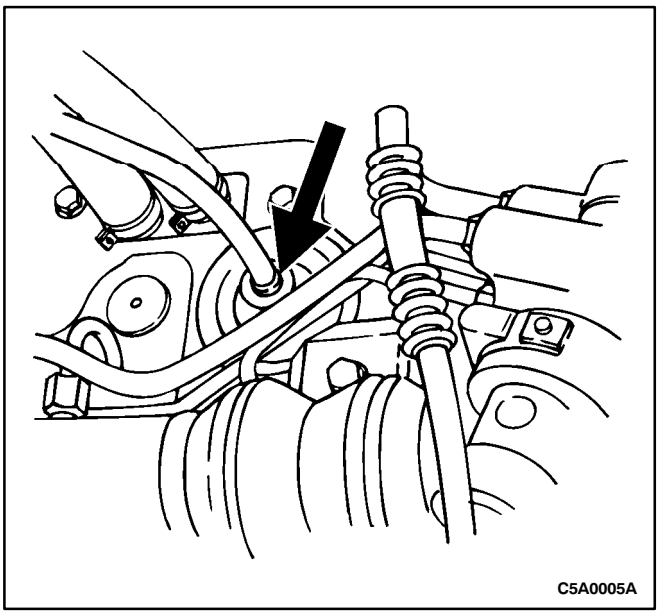

8. Pull the shift control cable through the firewall along with the grommet from beneath the vehicle.

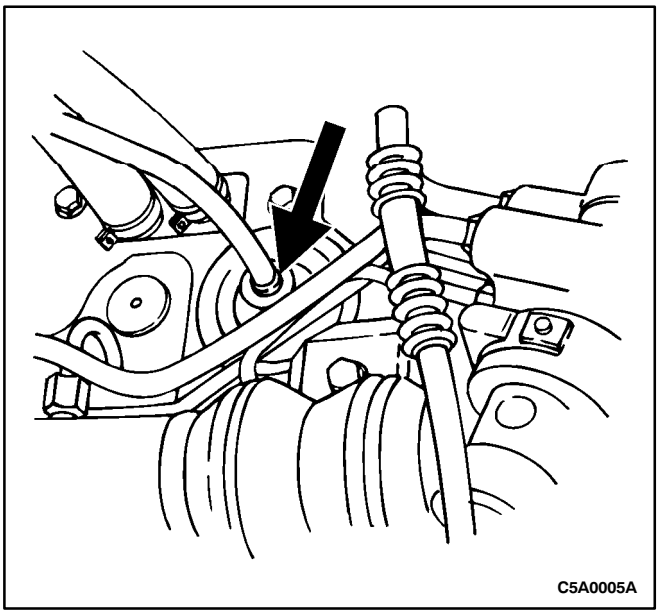

Installation Procedure

1. Push the shift control cable through the firewall into the passenger compartment. Seat the rubber grommet in the firewall. (Hint: use foaming glass cleaner to ease installation).
2. Move the transaxle shift lever to the park position, then install the shift control cable into the transaxle mount bracket.

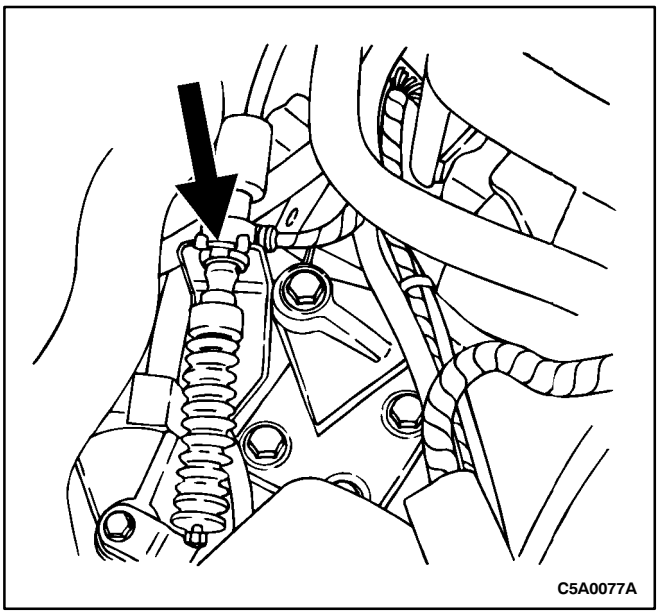

3. Install the clip onto the shift control cable at the transaxle mount bracket.
4. Snap the shift control cable onto the transaxle shift control lever.

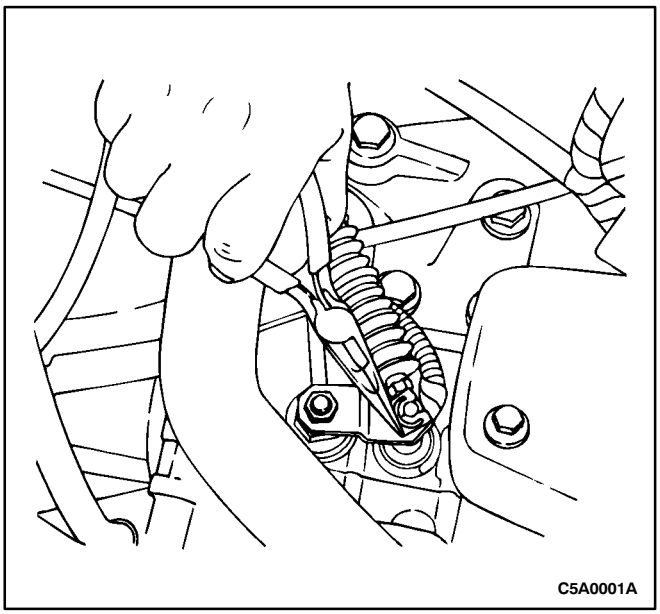

5. Install the retaining clip onto the transaxle shift control lever.

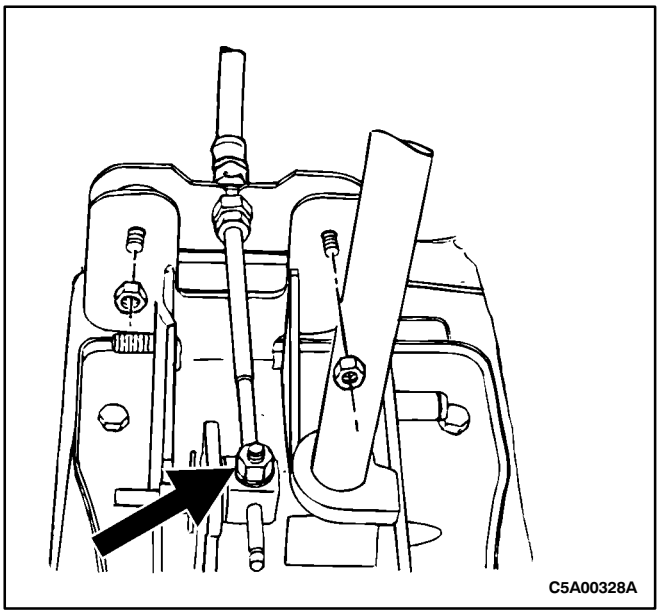

6. Move the shifter forward until it contacts the stop, then install the shift control cable at the selector in the vehicle.

   Tighten

   Tighten the shift control cable attachment nut to 6 N•m (53 lb-in).

7. Insert the shift control cable into the connecting slot on the shift control lever and secure it with the pinch bolt and the nut.

   Tighten

   Tighten the shift control cable adjustment pinch bolt nut to 8 N•m (71 lb-in).

8. Install the floor console trim panel. Refer to *Section 9G, Interior Trim.*
9. Install the battery tray and the battery. Refer to *Section 1E, Engine Electrical.*

CONTROL CABLE ADJUSTMENT

Adjustment Procedure

The various shift control cable positions must match at the shift control lever in the vehicle and at the selector lever on the transaxle to provide proper transaxle shifting.

Place the shift control lever in the PARK position and check the selector lever connection to verify that it is in the forward most position. If it is not, the following adjustment must be performed:

1. Place the shift control lever in the PARK position.
2. Remove the trim panel from the floor console. Refer to *Section 9G, Interior Trim.*

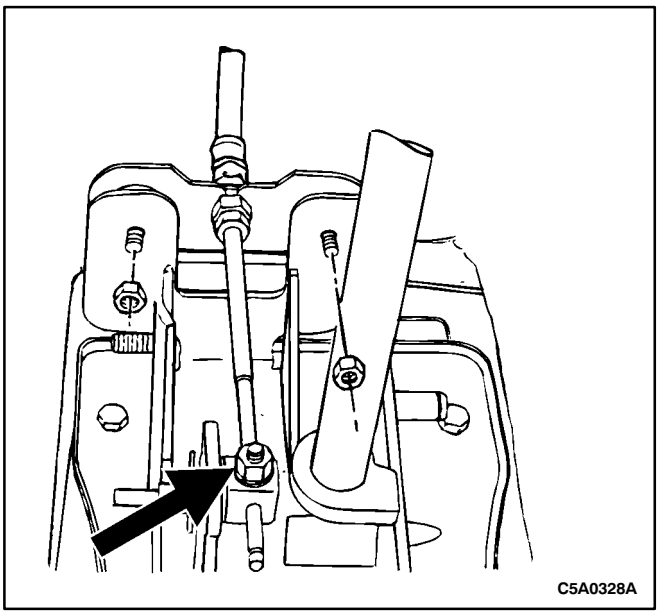

3. Loosen the pinch bolt nut on the shift control lever.
4. Move the transaxle shift lever forward toward the front of the vehicle.
5. Verify that the shifter is in the PARK position, then tighten the shift control cable adjuster pinch bolt and nut.

   Tighten

   Tighten the shift control cable adjuster pinch bolt nut to 8 N•m (71 lb-in).
6. Install the floor console trim panel. Refer to *Section 9G, Interior Trim.*

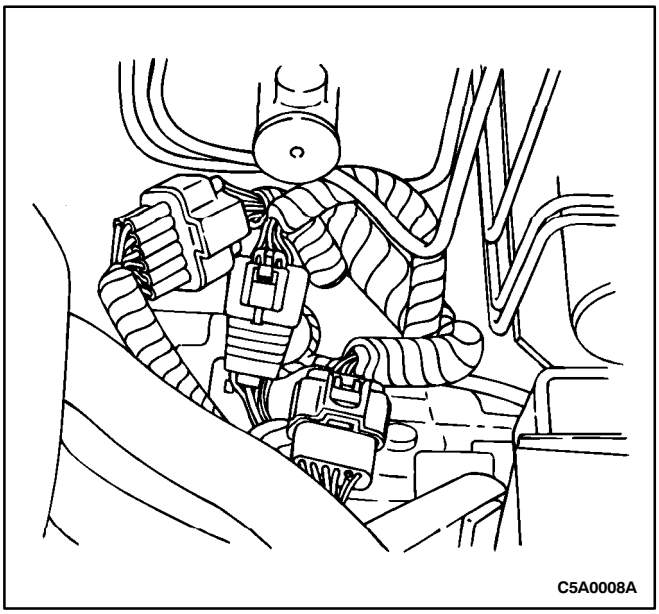

PARK/NEUTRAL POSITION (PNP) SWITCH

Removal Procedure

1. Remove the battery and battery tray. Refer to *Section 1E, Engine Electrical.*
2. Disconnect the park/neutral position (PNP) switch electrical connector from the wiring harness.

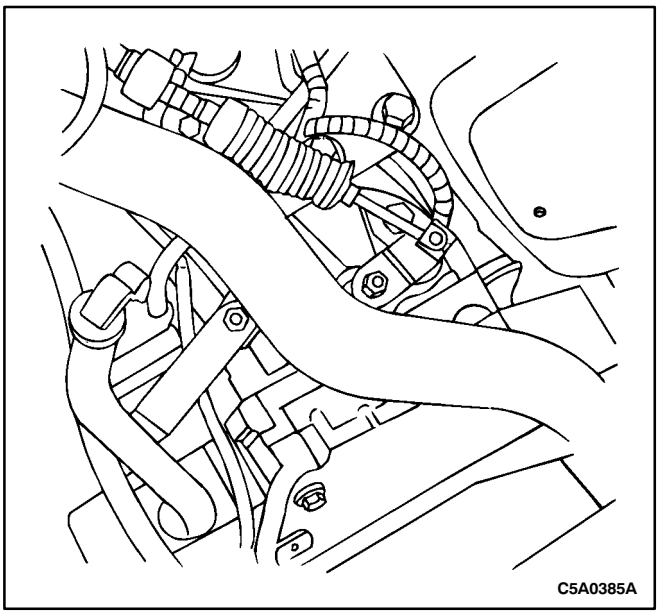

3. Remove the nut retaining the shift control cable linkage to the PNP switch and the nut retaining the fluid filler tube to the PNP switch stud bolt.

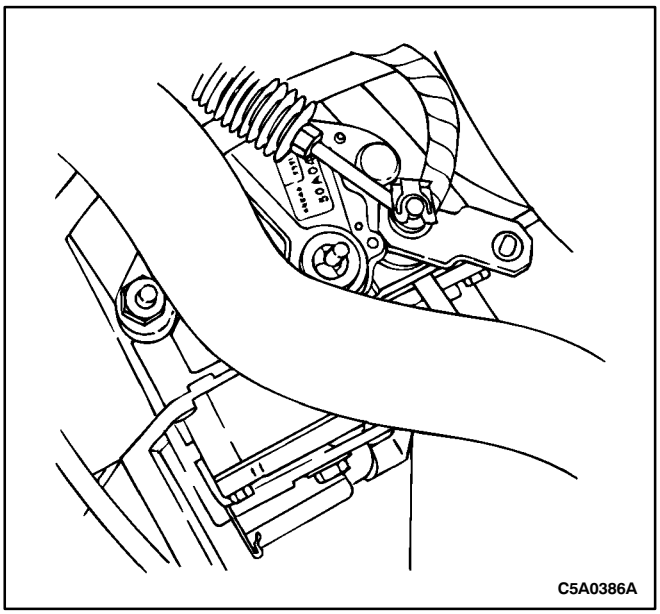

4. Remove the bolt, nut and washer and stud bolt retaining the PNP switch to the transaxle case, then remove the PNP switch.

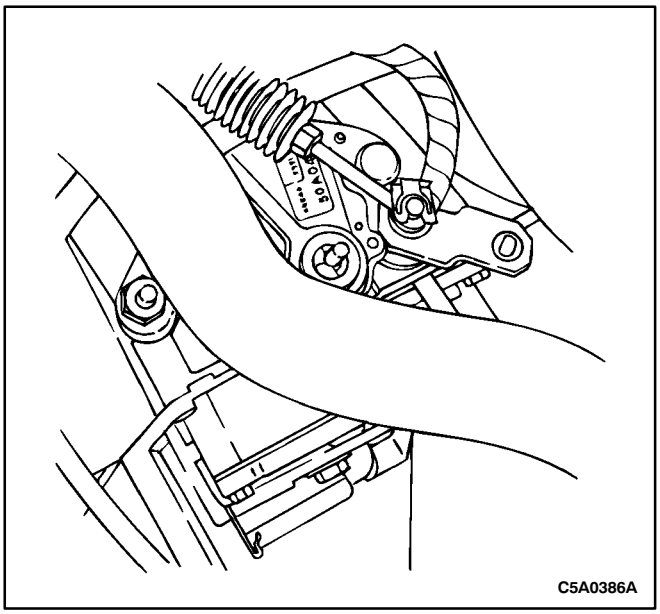

Installation Procedure

1. Install the park/neutral position (PNP) switch, then install the stud bolt, bolt and nut and washer hand tight.

   Tighten

   Tighten the retaining nut to 6-8 N•m (53-71 lb-ft).

2. Place the shift control lever in the Neutral (N) position.

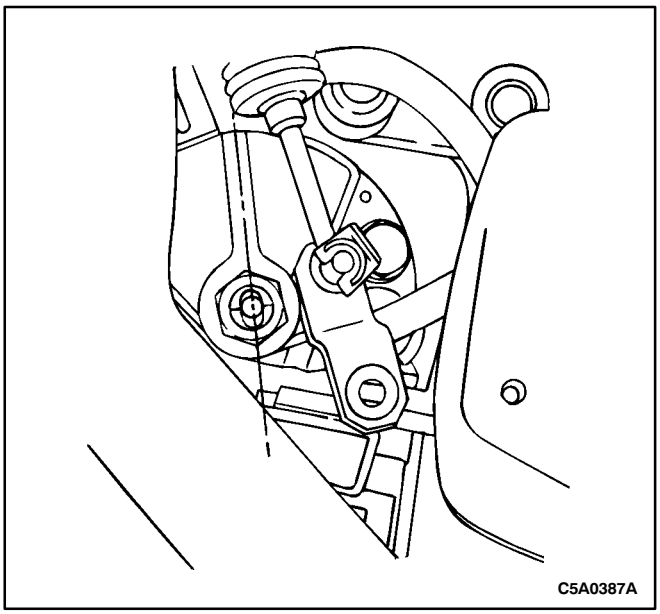

3. Align the neutral basic line on the PNP switch with the flat on the manual detent lever.

   Tighten

   Tighten the stud bolt to 20-29 N•m (14-22 lb-ft).

   Tighten the bolt to 10-16 N•m (7-11 lb-ft).

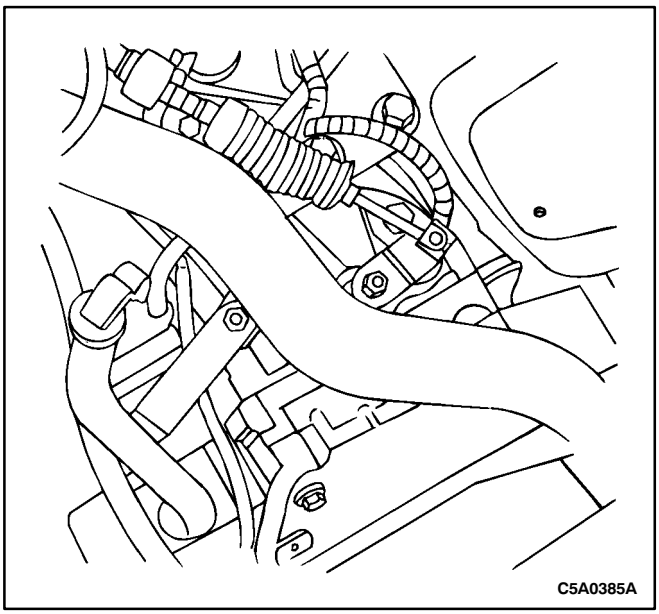

4. Position the fluid filler tube bracket on the stud bolt and the shift control cable linkage on the manual detent lever stud. Install the shift control cable linkage and fluid filler tube bracket retaining nuts.

Tighten

Tighten the shift control cable linkage retaining nut to 15 N•m (11 lb-ft).

Tighten the fluid filler tube bracket retaining nut to 15 N•m (11 lb-ft).

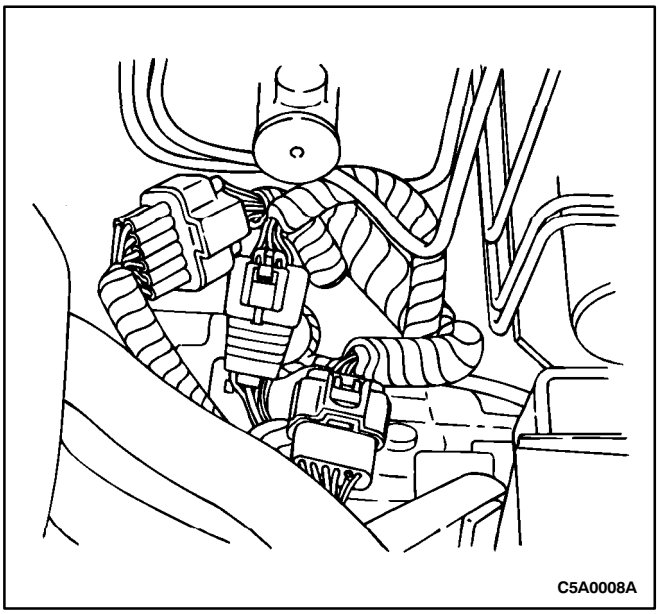

5. Connect the PNP switch electrical connector to the wiring harness.
6. Install the battery and battery tray. Refer to *Section 1E, Engine Electrical.*

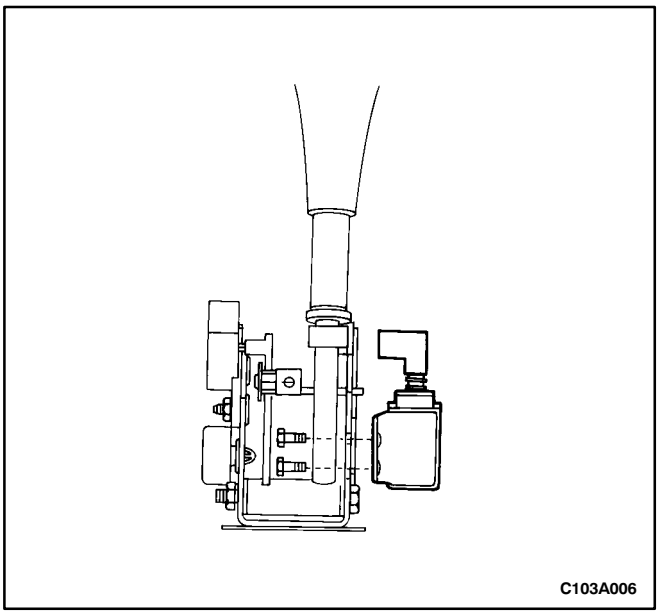

BRAKE TRANSAXLE SHIFT INTERLOCK

Removal Procedure

1. Disconnect the negative battery cable.
2. Remove the center console. Refer to *Section 9G, Interior Trim.*
3. Disconnect the electrical connector from the shift interlock solenoid.
4. Remove the shift interlock solenoid bolts and the shift interlock solenoid.

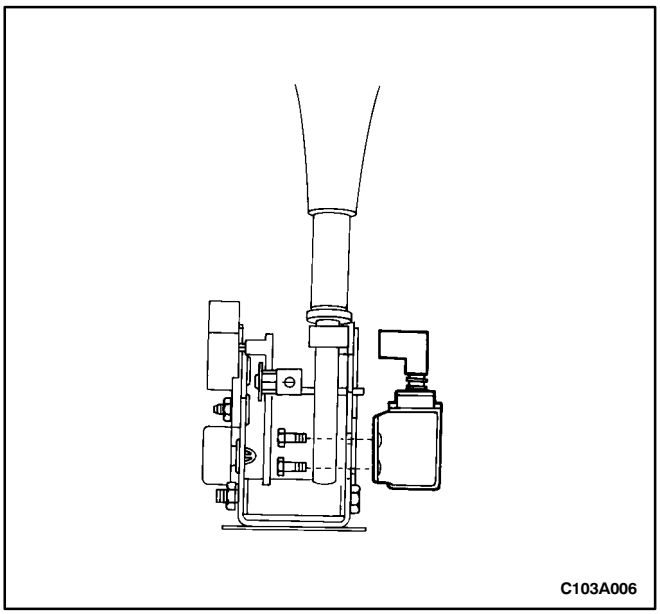

Installation procedure

1. Install the shift interlock solenoid and the shift interlock solenoid bolts.

   Tighten

   Tighten the shift interlock solenoid bolts to 4 N•m (35 lb-in).
2. Connect the electrical connector to the shift interlock solenoid.
3. Install the center console. Refer to *Section 9G, Interior Trim.*
4. Connect the negative battery cable.

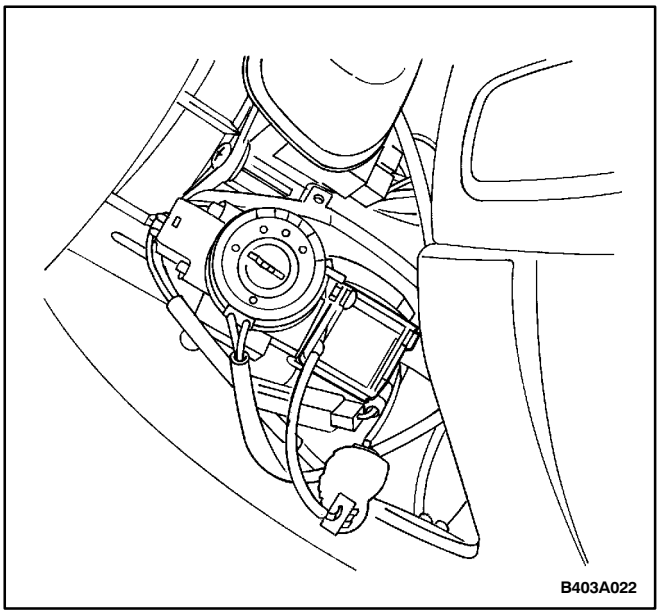

KEY INTERLOCK

Removal Procedure

1. Disconnect the negative battery cable.
2. Remove the upper and the lower steering column cover panels. Refer to *Section 6E, Steering Wheel and Column.*

Notice: Be careful when removing the key interlock solenoid. There is a plunger with a spring attached that can become easily lost.

3. Disconnect the key interlock solenoid electrical connector and remove the key interlock solenoid screws and the key interlock solenoid.

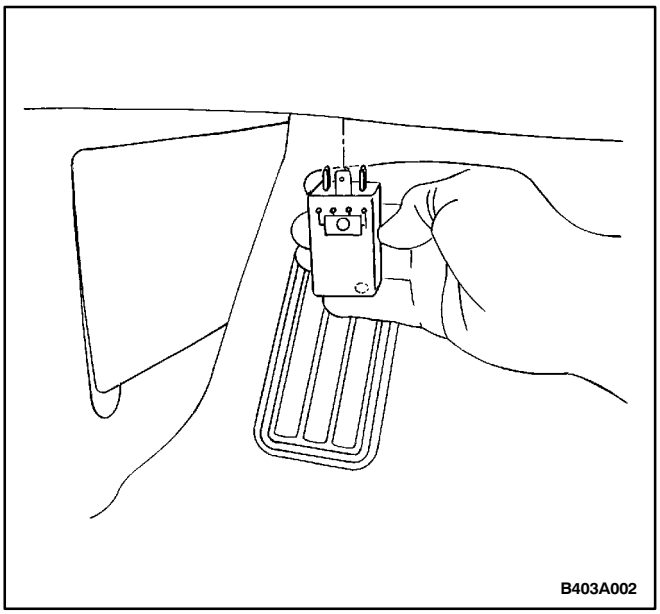

4. Remove the key interlock unit. It is located to the left of the steering column behind the driver knee bolster.

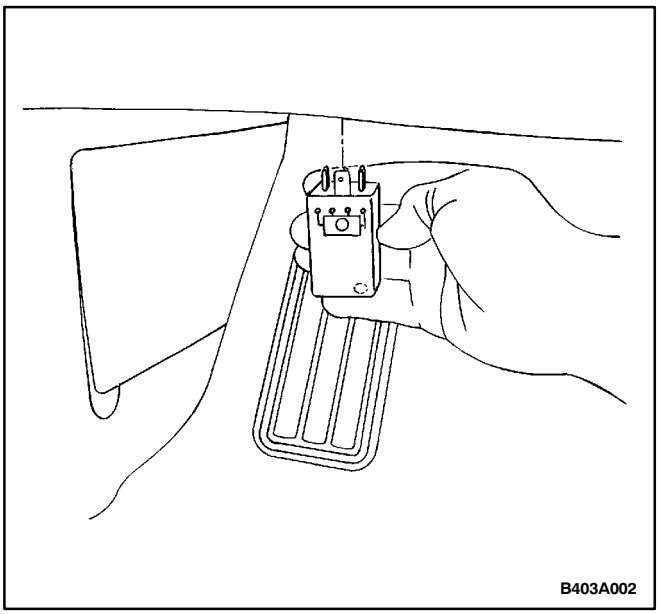

Installation Procedure

1. Install the key interlock unit.

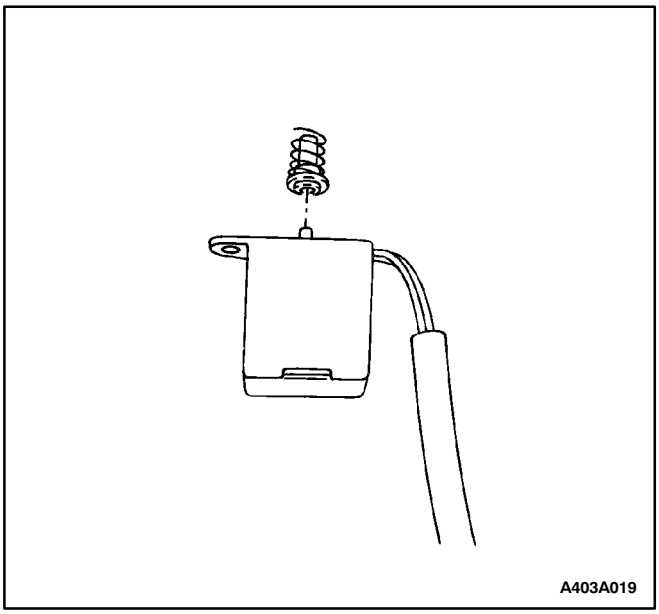

2. Place the spring and the plunger on the key interlock solenoid.

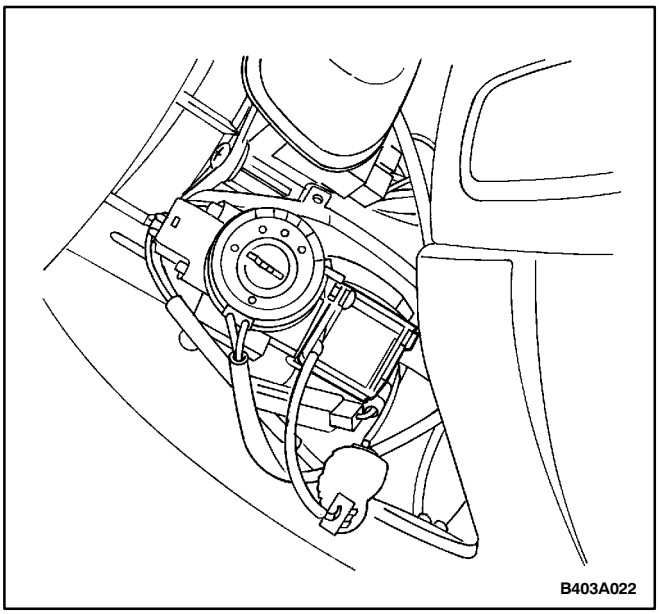

3. Install the key interlock solenoid and the solenoid screws.

   Tighten

   Tighten the key interlock solenoid screws to 2 N•m (18 lb-in).
4. Install the upper and the lower steering column cover panels. Refer to *Section 6E, Steering Wheel and Column.*
5. Connect the negative battery cable.

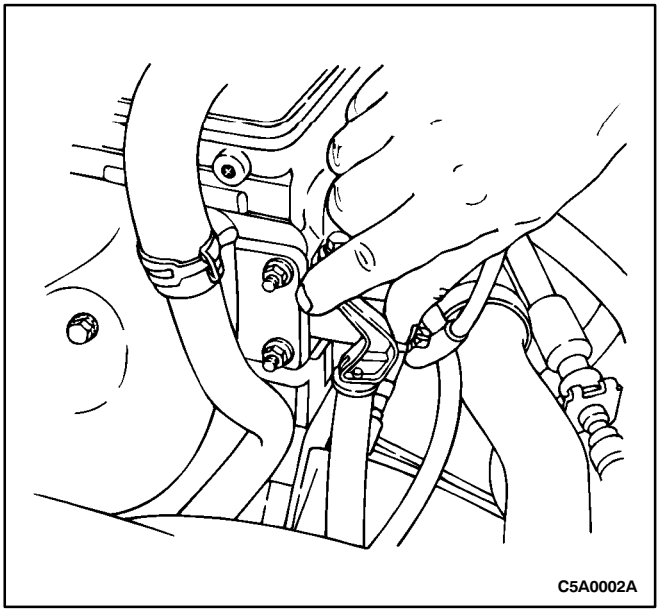

FLUID FILLER TUBE

Removal Procedure

1. Remove the transaxle oil dipstick.

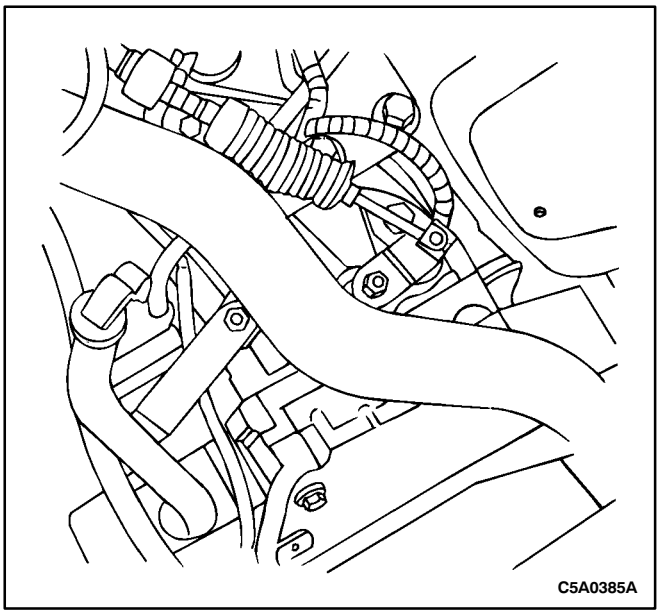

2. Remove the fluid filler tube nut from the park/neutral position (PNP) switch stud.
3. Grasp the body of the fluid filler tube, then pull it out of the transaxle case.

Installation Procedure

1. Install a new O-ring on the fluid filler tube.
2. Lubricate the O-ring with TOTAL FLUID HX.
3. Install the fluid filler tube into the transaxle case.
4. Install the fluid filler tube nut on the stud on the PNP switch.

Tighten

Tighten the fluid filler tube nut to 15 N•m (11 lb-ft).

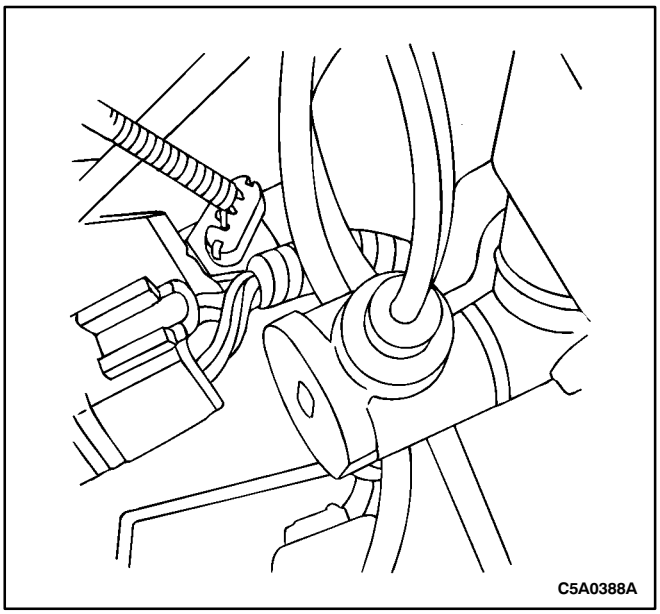

VEHICLE SPEED SENSOR (VSS)

Removal Procedure

1. Disconnect the negative battery cable.
2. Disconnect the vehicle speed sensor (VSS) electrical connector.

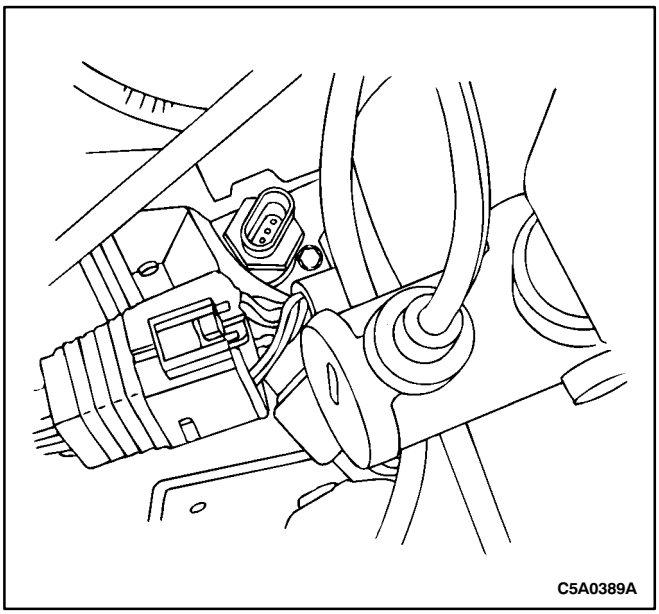

3. Remove the VSS retaining bolt, then the VSS.
4. Remove and discard the O-ring from the VSS.

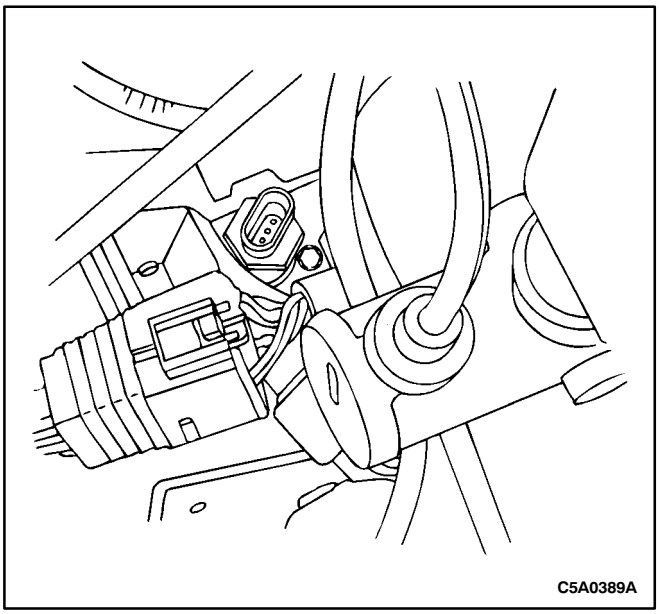

Installation Procedure

Notice: Lubricate the O-ring with TOTAL FLUID HX.

1. Install a new O-ring onto the vehicle speed sensor (VSS).
2. Install the VSS into the transaxle case, then install the retaining bolt.

Tighten

Tighten the retaining bolt to 4−7 N•m (35-62 lb-in).

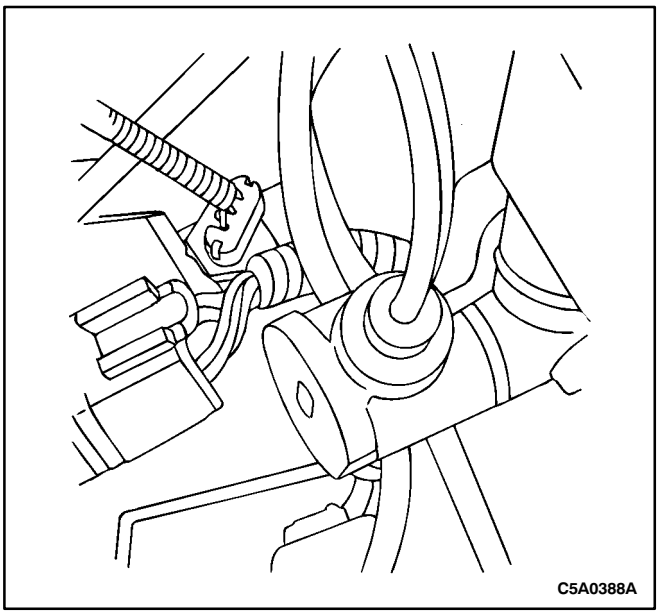

3. Connect the VSS electrical connector.
4. Connect the negative battery cable.

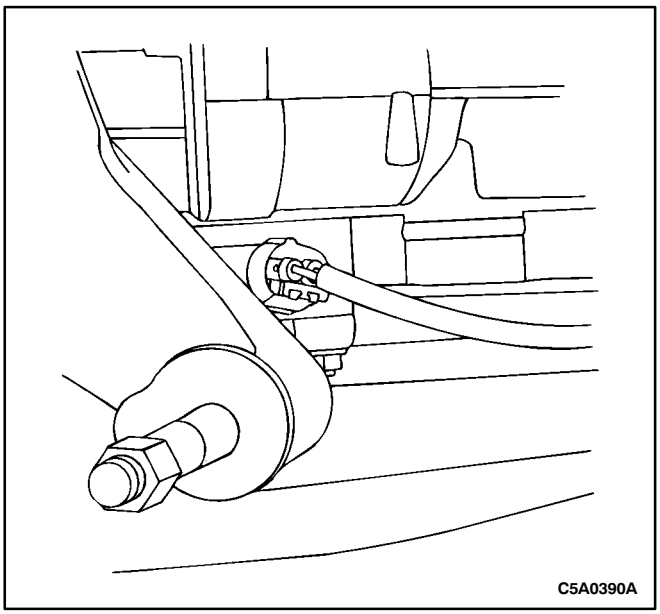

INPUT SHAFT SPEED (ISS) SENSOR

Removal Procedure

1. Remove the transaxle left bracket. Refer to “Transaxle Left Bracket” in this section.
2. Disconnect the input shaft speed (ISS) sensor electrical connector.

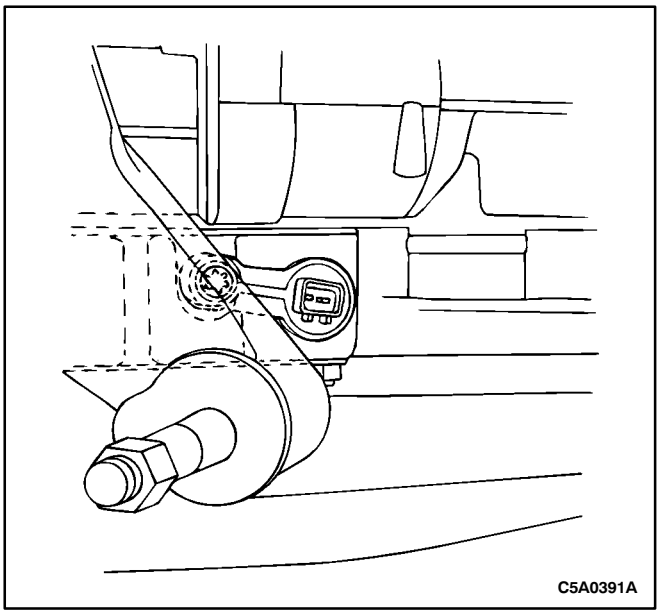

3. Using the appropriate Torx® fastener tool, remove the ISS sensor retaining bolt, then grasp the body of the ISS sensor and remove it from the transaxle.

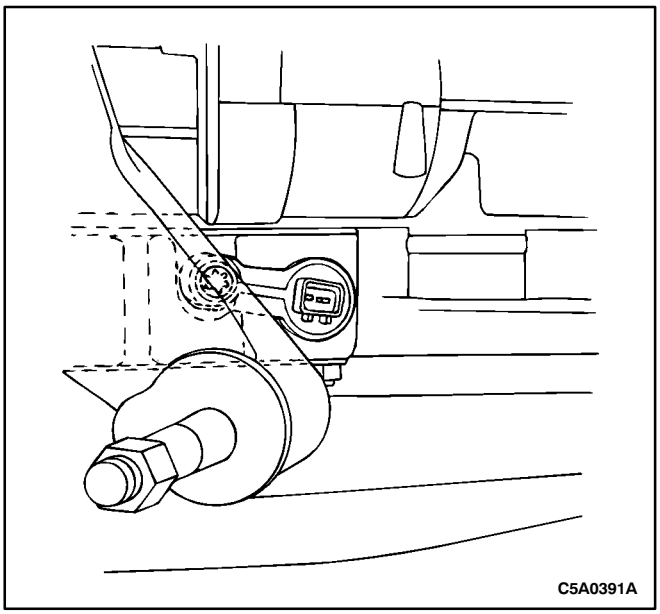

Installation Procedure

Notice: Lubricate the O-ring with TOTAL FLUID HX.

1. Install a new O-ring on the ISS sensor.
2. Install the ISS sensor and retaining bolt into the transaxle case.

Tighten

Tighten the ISS sensor retaining bolt to 4-7 N•m (35-62 lb-in).

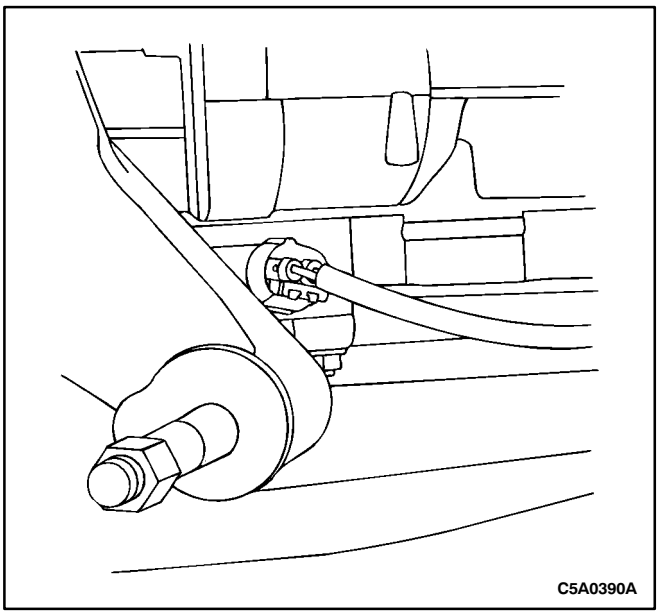

3. Connect the ISS sensor electrical connector.
4. Install the transaxle left bracket. Refer to “Transaxle Left Bracket” in this section.

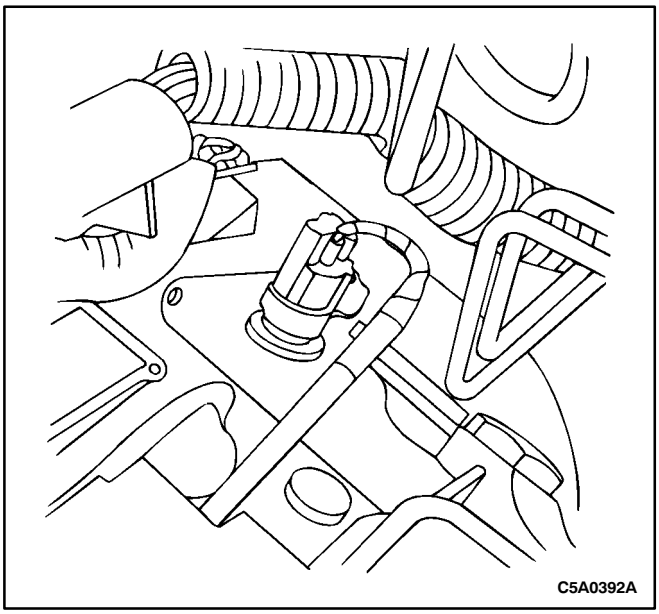

OUTPUT SHAFT SPEED (OSS) SENSOR

Removal Procedure

1. Disconnect the output shaft speed (OSS) sensor electrical connector.

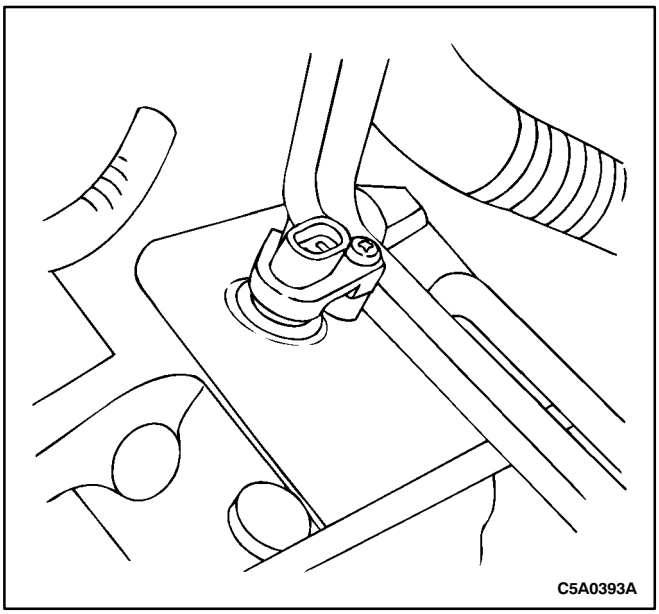

2. Using the appropriate Torx® fastener tool, remove the OSS sensor retaining bolt, then grasp the body of the OSS sensor and remove it from the transaxle.

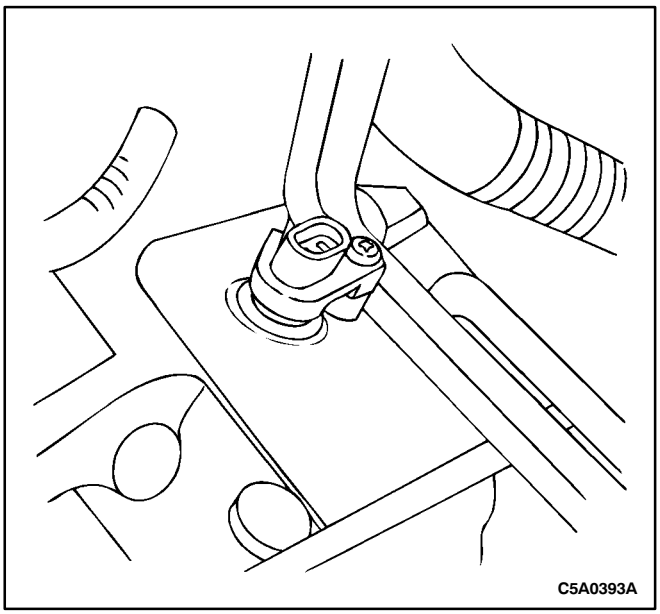

Installation Procedure

Notice: Lubricate the O-ring with TOTAL FLUID HX.

1. Install a new O-ring on the output shaft speed (OSS) sensor.
2. Install the OSS sensor and retaining bolt into the transaxle case.

   Tighten

   Tighten the OSS sensor retaining bolt to 4-7 N•m (35-62 lb-in).

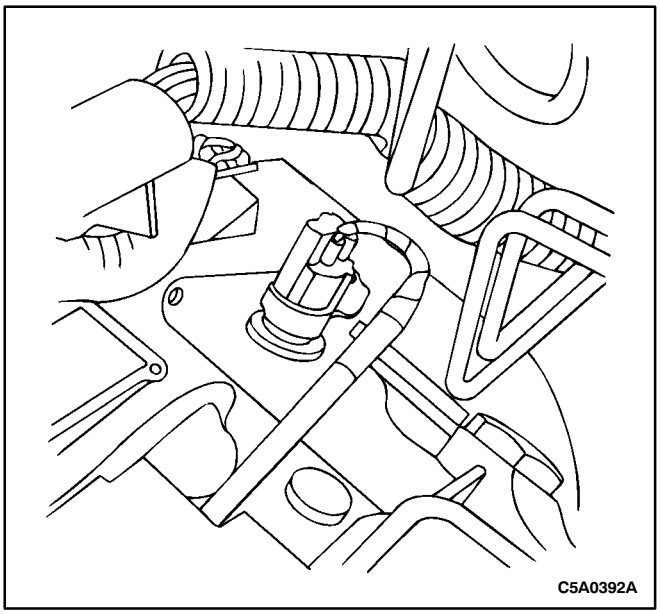

3. Connect the (OSS) sensor electrical connector.

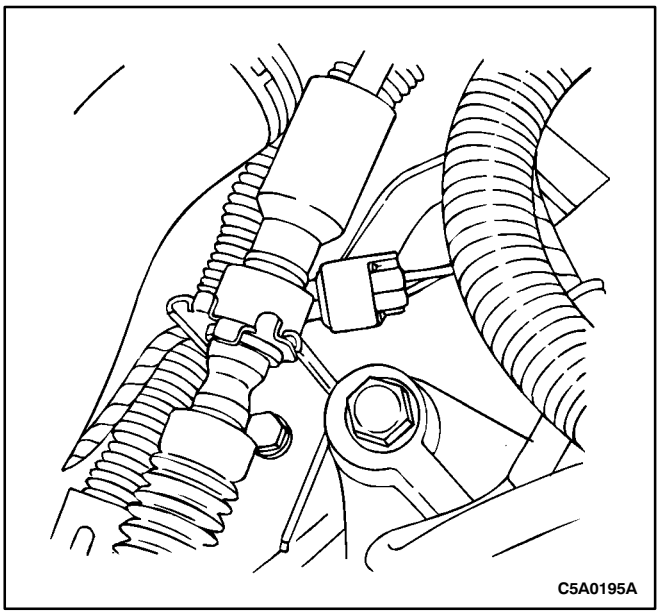

TRANSMISSION FLUID TEMPERATURE (TFT) SENSOR

Removal Procedure

1. Disconnect the transmission fluid temperature (TFT) sensor electrical connector.
2. Raise and support the vehicle. Refer to *Section OB, General Information.*
3. Drain the transaxle fluid. Refer to “Fluid Drain Procedure” in this section.

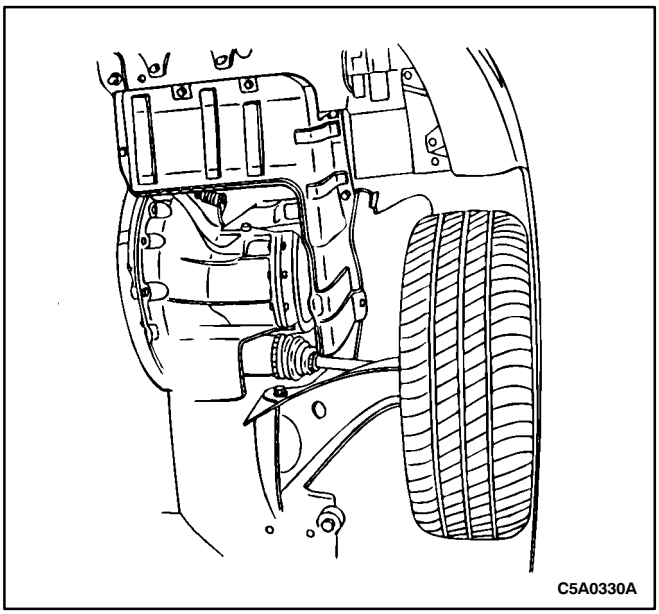

4. Remove the engine undercover.

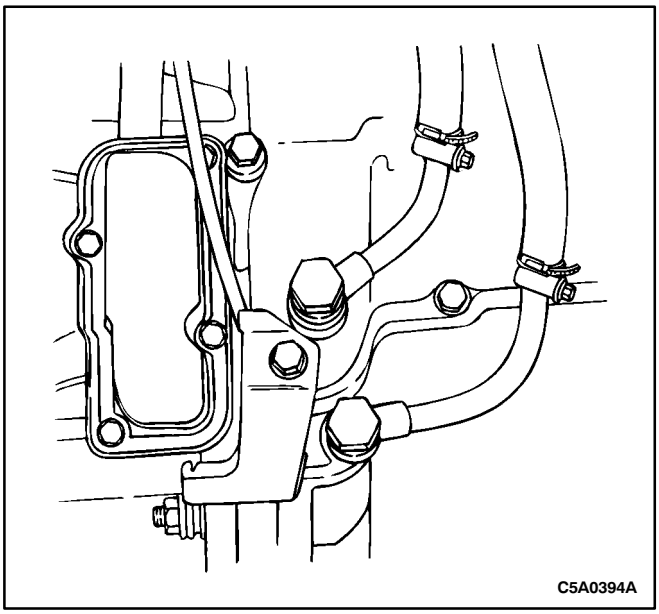

5. Remove the nut and bolt from the TFT sensor protector bracket, then remove the bracket.

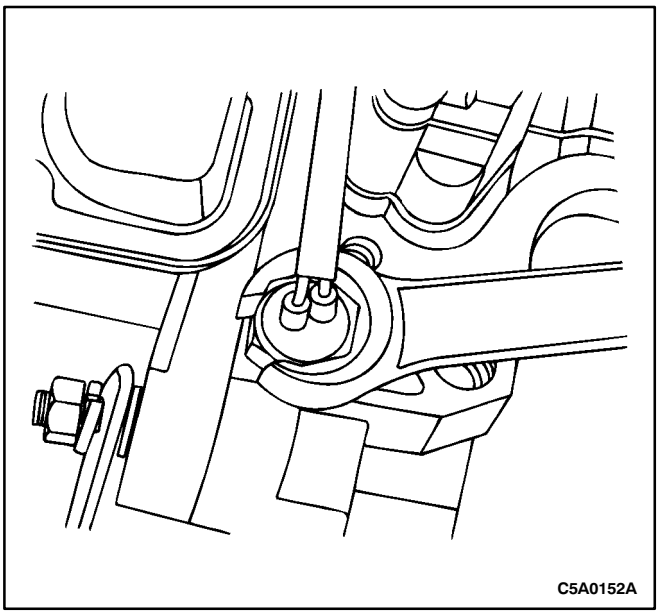

Notice: Discard the TFT sensor O-ring.

6. Remove the TFT sensor.

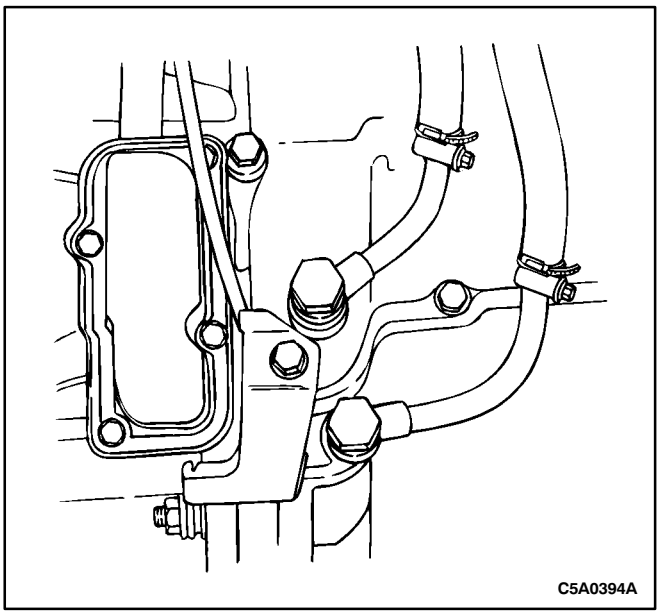

Installation Procedure

Notice: Lubricate the TFT sensor O-ring with TOTAL FLUID HX.

1. Install a new O-ring on the transmission fluid temperature (TFT) sensor.
2. Install the TFT into the transaxle case hand tight.

   Tighten

   Tighten the TFT sensor to 7-13 N•m (62-115 lb-in).
3. Install the TFT sensor protector and nut and bolt.

   Tighten

   Tighten the nut and bolt to 20-29 N•m (15-22 lb-ft.).

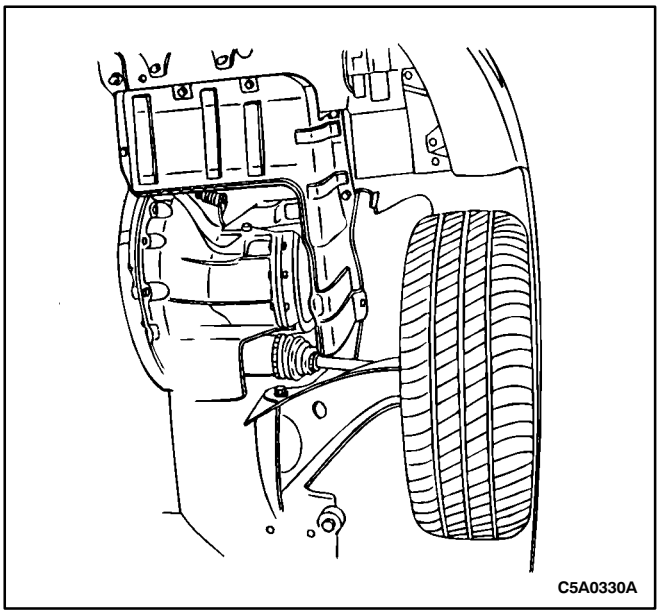

4. Install the engine undercover.
5. Lower the vehicle.

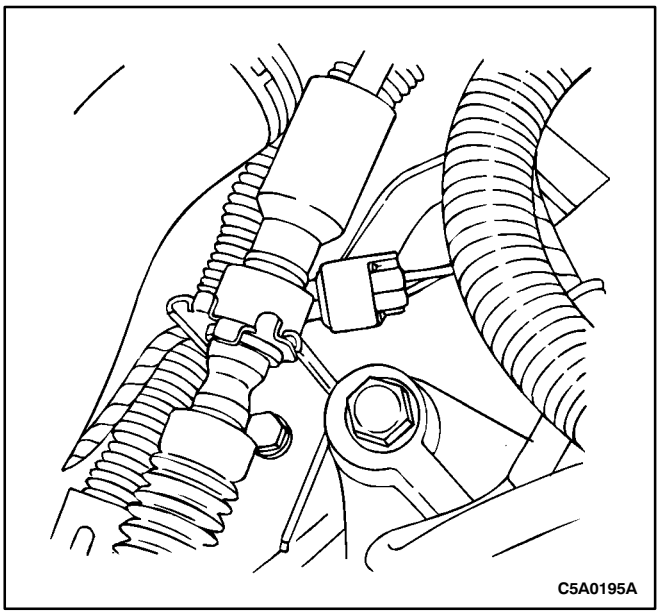

6. Connect the TFT sensor electrical connector.
7. Refill the transaxle. Refer to “Fluid Drain Procedure” in this section.

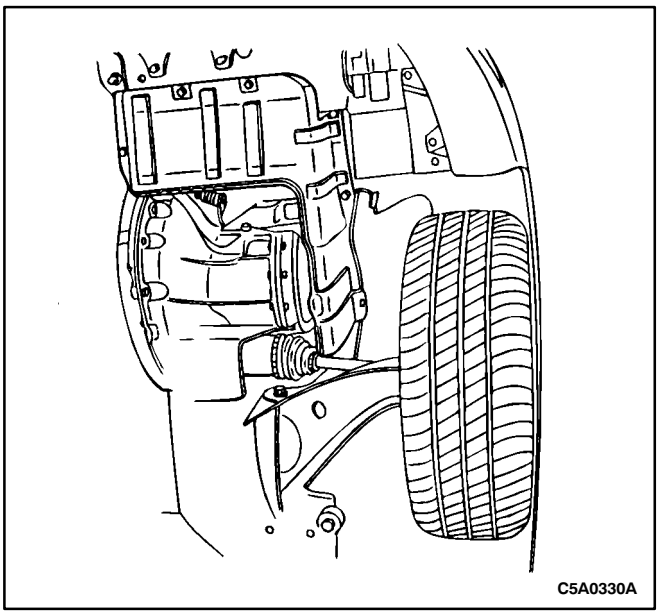

VALVE BODY SOLENOIDS

Removal Procedure

1. Disconnect the negative battery cable.
2. Raise and support the vehicle. Refer to *Section 0B, General Information.*
3. Drain the transaxle fluid. Refer to “Fluid Drain Procedure” in this section.
4. Remove the engine under cover.

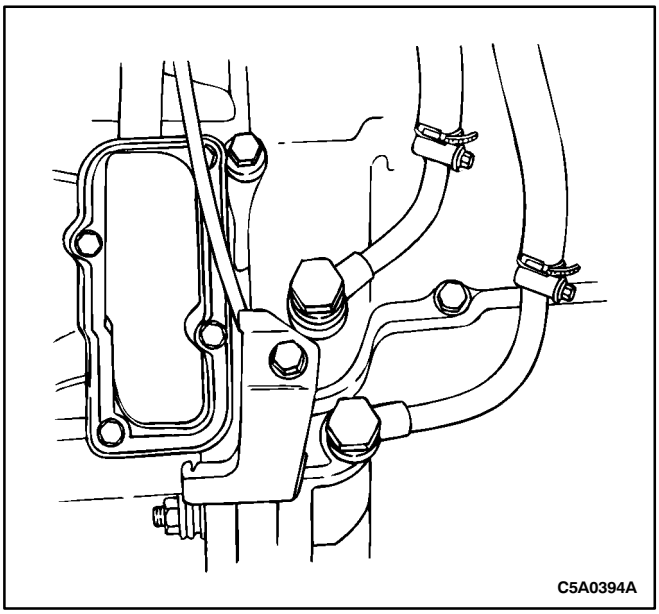

5. Remove the nut and bolt from the transmission fluid temperature (TFT) sensor protector bracket, then remove the bracket.

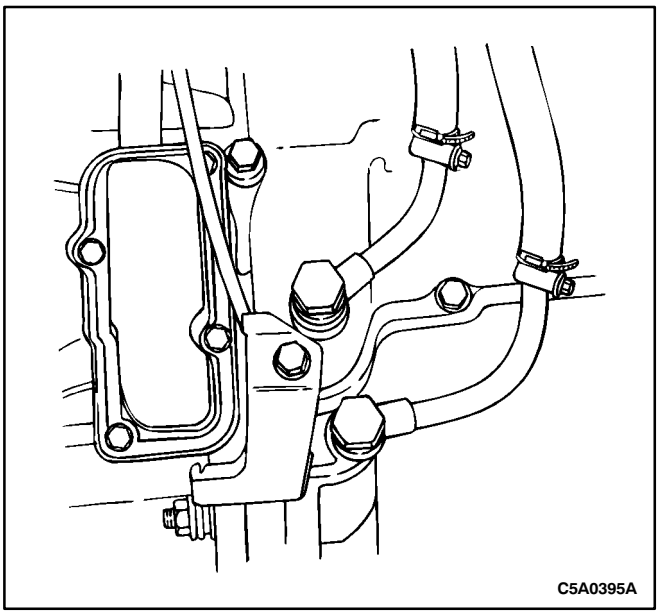

6. Disconnect the fluid cooler pipes at the valve body cover and allow the fluid to drain, then position the pipes aside.

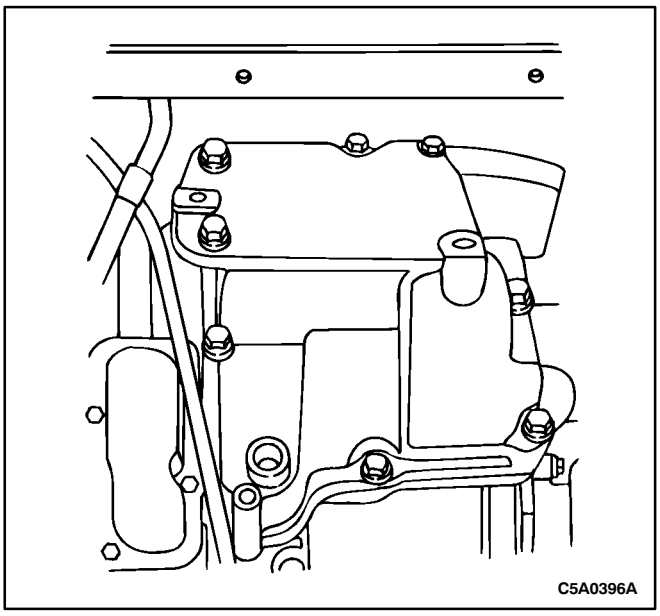

7. Remove the eight bolts from the valve body cover, then remove the cover.

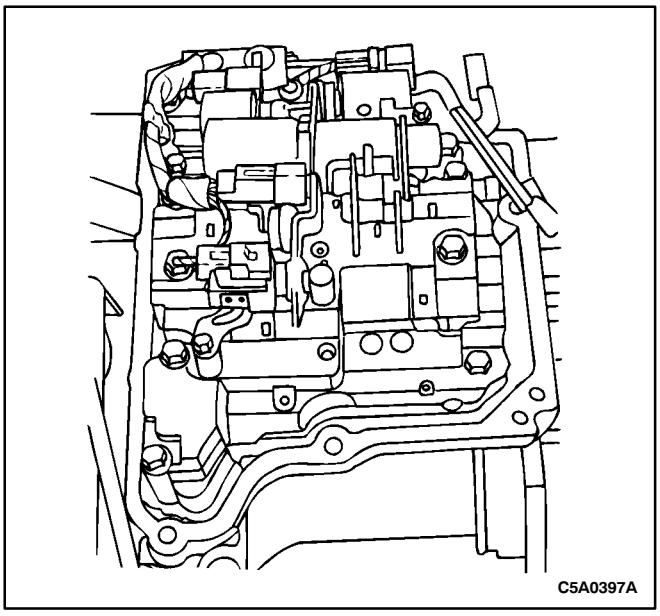

8. Disconnect the electrical connectors from shift solenoid 1 (SS1), shift solenoid 2 (SS2), the linear solenoid and the lockup solenoid.

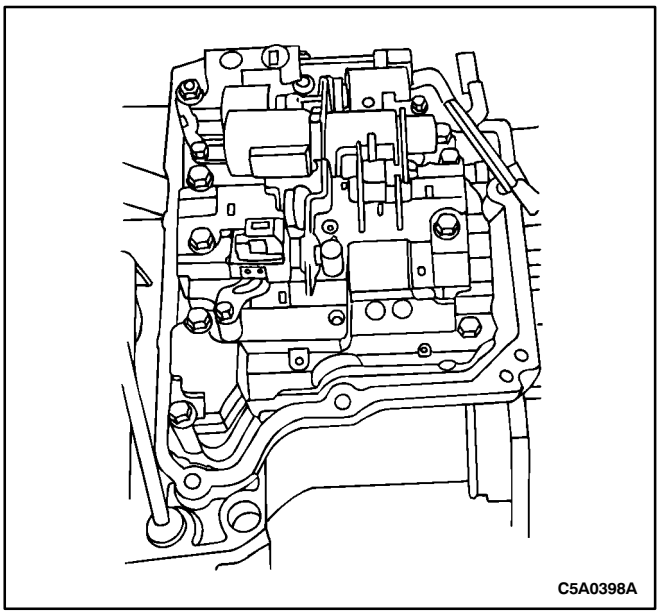

Notice: Discard the SS1 O-ring.

9. Remove the retaining bolt, clamp and SS1.

Notice: Discard the SS2 O-ring.

10. Remove the retaining bolt and SS2.
11. Remove the valve body bolt located to the left of the linear solenoid.

Notice: Discard the linear solenoid O-ring.

12. Remove the retaining bolt and the linear solenoid.

Notice: Discard the lockup solenoid O-ring.

13. Remove the retaining bolt and the lockup solenoid.

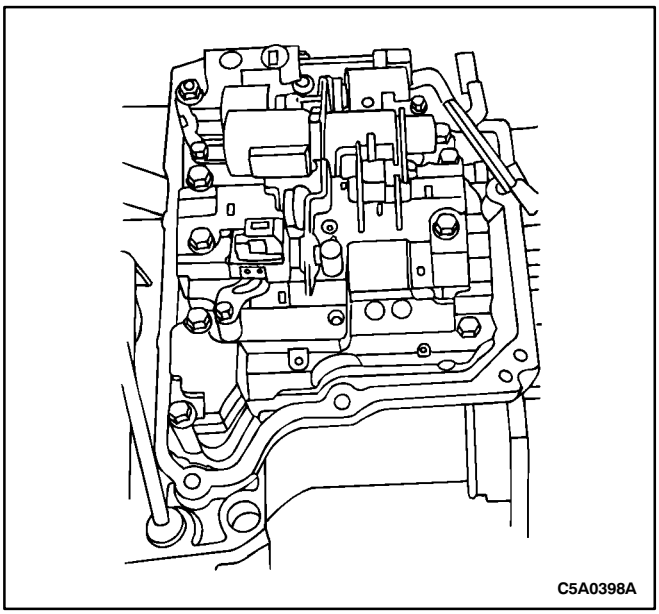

Installation Procedure

Notice: Lubricate the SS1, SS2, linear solenoid and lockup solenoid O-rings with TOTAL FLUID HX.

1. Install new O-rings on shift solenoid 1 (SS1), shift solenoid 2 (SS2), the linear solenoid and the lockup solenoid.
2. Install SS1, SS2, the linear solenoid and the lockup solenoid into the valve body, then install the solenoid retaining bolts and clamp and the valve body bolt.

Tighten

Tighten the SS1, SS2, the linear solenoid and the lockup solenoid retaining bolts to 6-7 N•m (53-62 lb-in).

Tighten the valve body bolt to 6-7 N•m (53-62 lb-in).

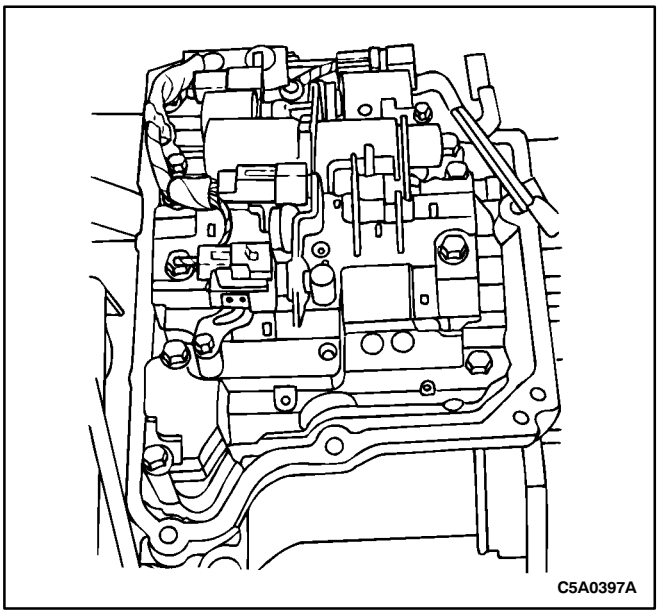

3. Connect the SS1, SS2, the linear solenoid and the lockup solenoid electrical connectors.

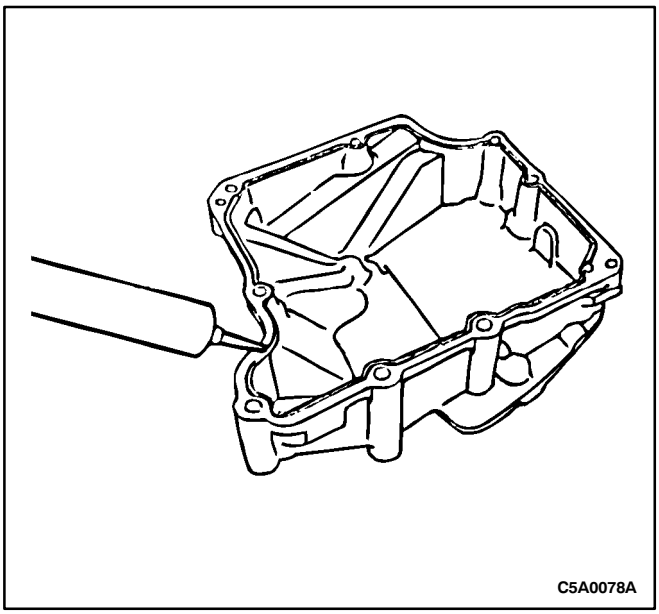

Notice: Remove the old gasket material from the valve body cover and mating surface of the transaxle.

4. Apply a bead of silicone sealant on the valve body cover.

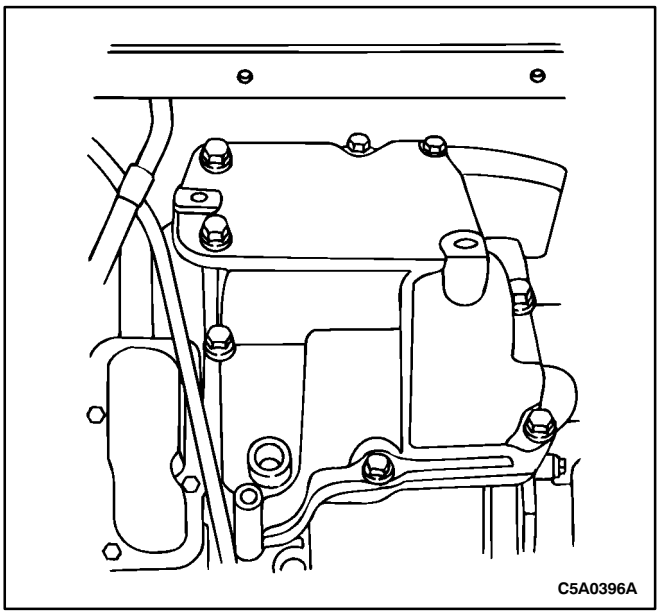

5. Install the valve body cover and the eight bolts.

Tighten

Tighten the valve body cover bolts to 20-30 N•m (14-22 lb-ft).

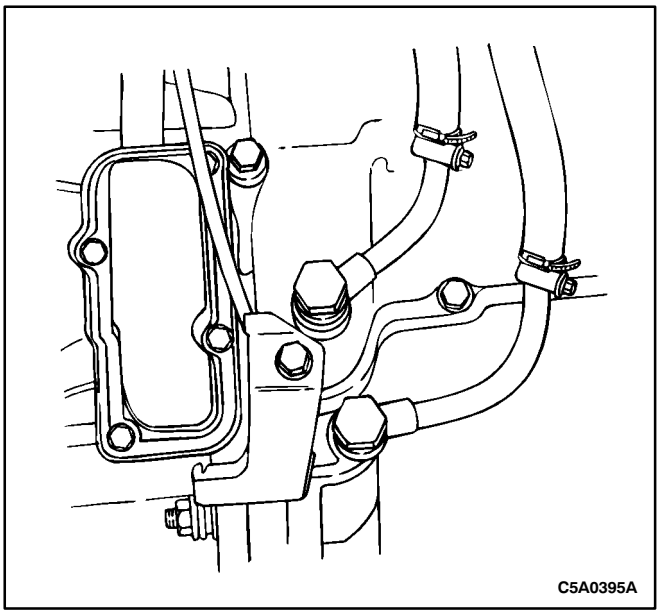

6. Connect the fluid cooler pipes at the valve body cover.

Tighten

Tighten the fluid cooler pipe bolts to 20-29 N•m (15-22 lb-ft).

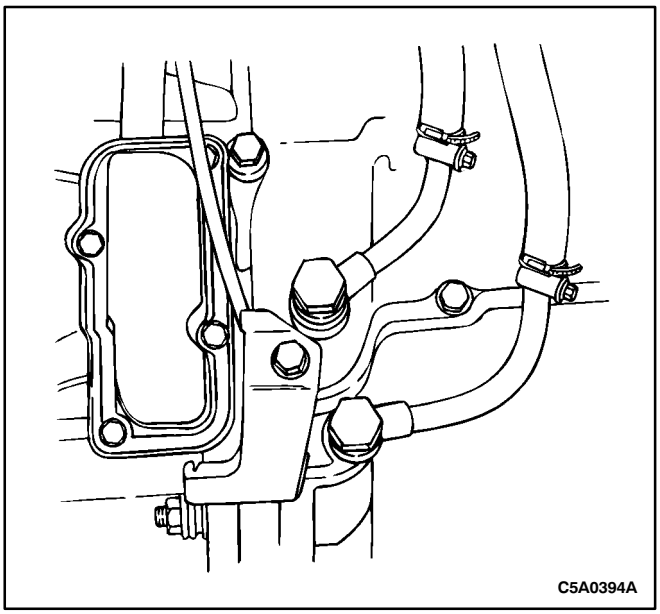

7. Position the transmission fluid temperature (TFT) sensor protector bracket, then install the nut and bolt.

Tighten

Tighten the TFT sensor protector bracket nut and bolt to 20-29 N•m (15-22 lb-ft).

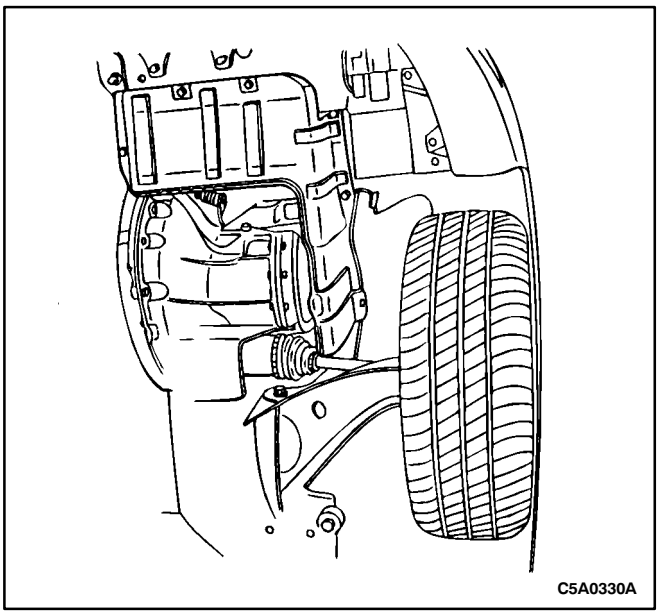

8. Install the engine under cover.
9. Lower the vehicle.
10. Connect the negative battery cable.
11. Fill the transaxle with fluid. Refer to “Fluid Drain Procedure” in this section.

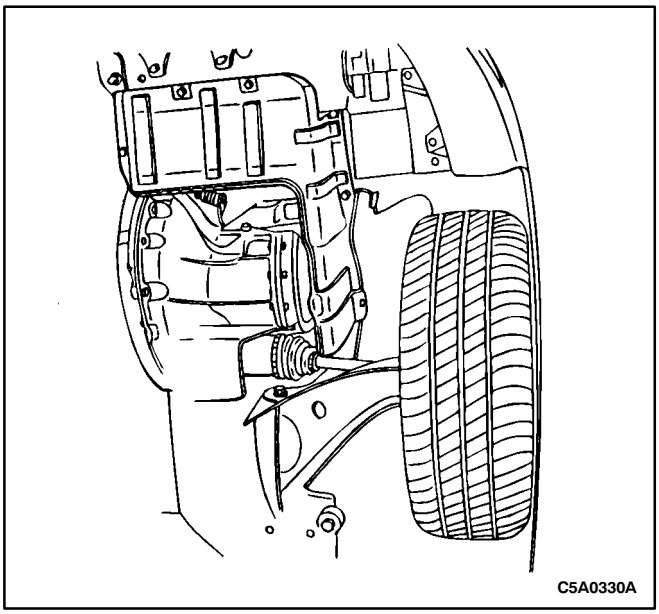

VALVE BODY

Removal Procedure

1. Disconnect the negative battery cable.
2. Raise and support the vehicle. Refer to “Vehicle Lifting Procedures,” *Section 0B, General Information.*
3. Drain the transaxle fluid. Refer to “Fluid Drain Procedure” in this section.
4. Remove the engine under cover.

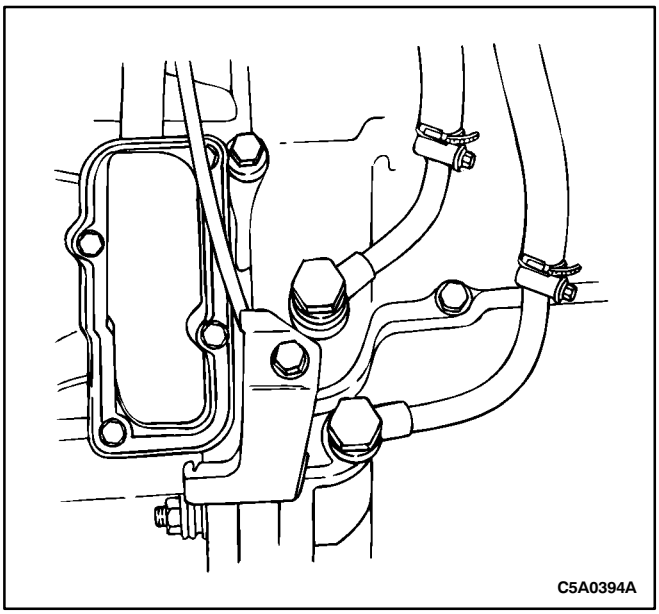

5. Remove the nut and bolt from the transmission fluid temperature (TFT) sensor protector bracket, then remove the bracket.

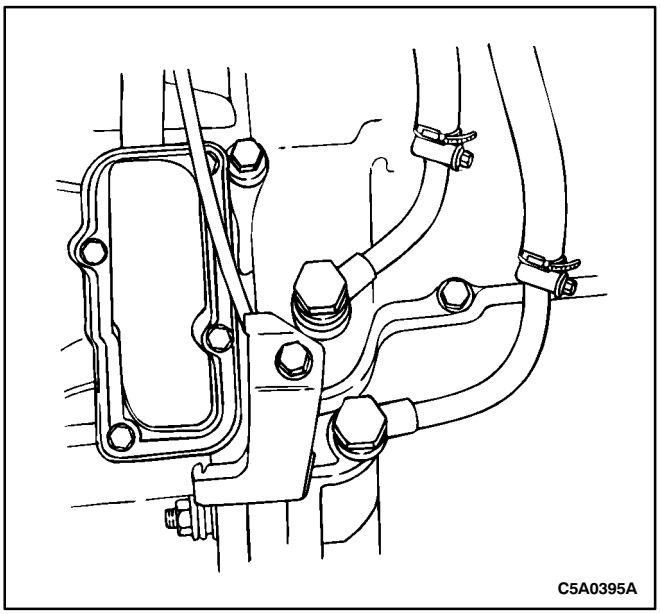

6. Disconnect the fluid cooler pipes at the valve body cover and allow the fluid to drain, then position the pipes aside.

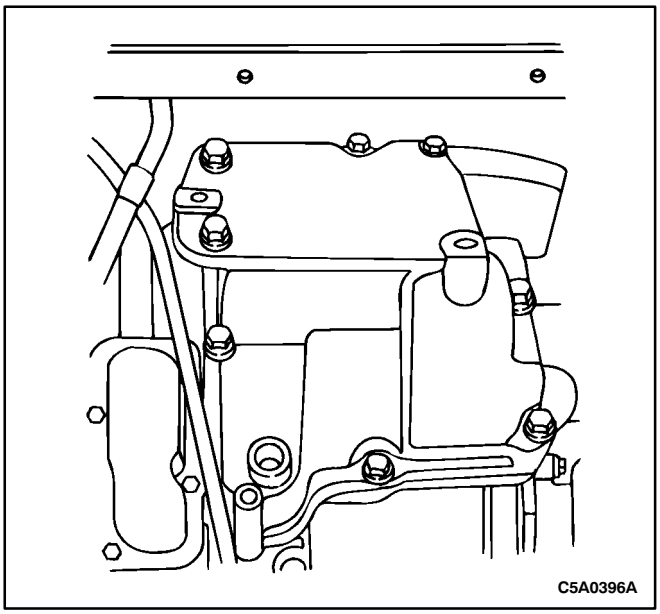

7. Remove the eight bolts from the valve body cover, then remove the cover.

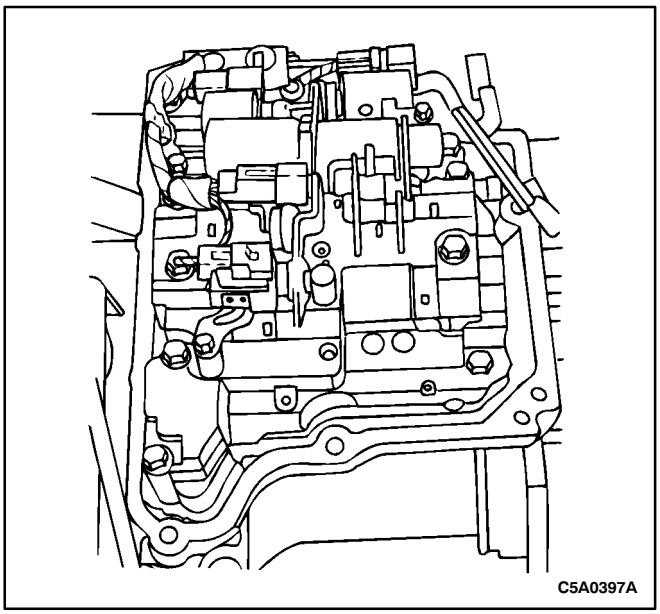

8. Disconnect the four electrical connectors from valve body solenoids.

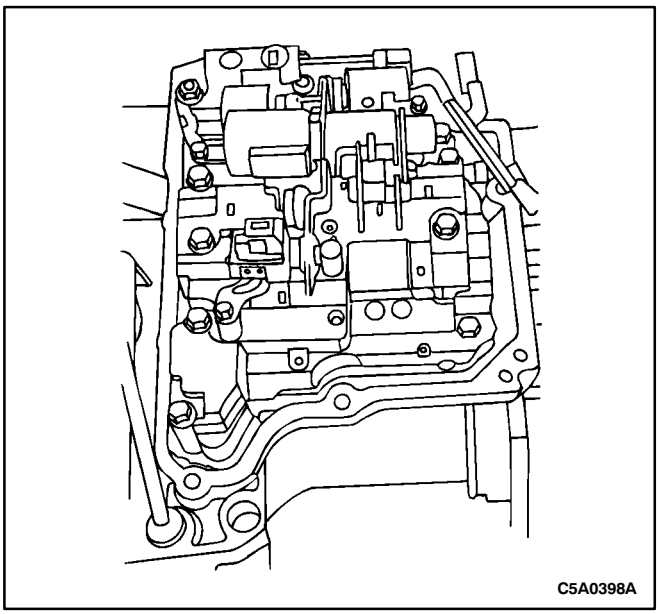

9. Remove the two suction cover retaining bolts and the suction cover.

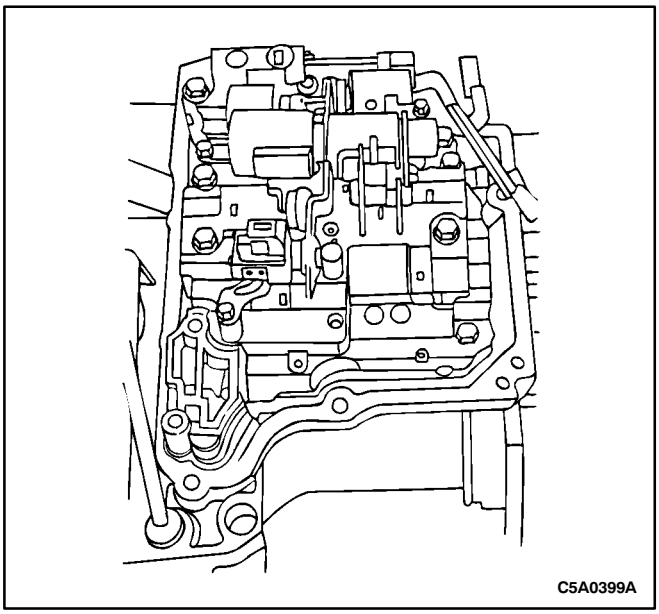

Caution: Use care not to damage the manual valve connecting rod or the lever.

10. Loosen the seven valve body retaining bolts and remove six of the bolts. Support the valve body and remove the seventh bolt. Continue to support the valve body and carefully disconnect the manual valve connecting rod from the lever. Remove the valve body.

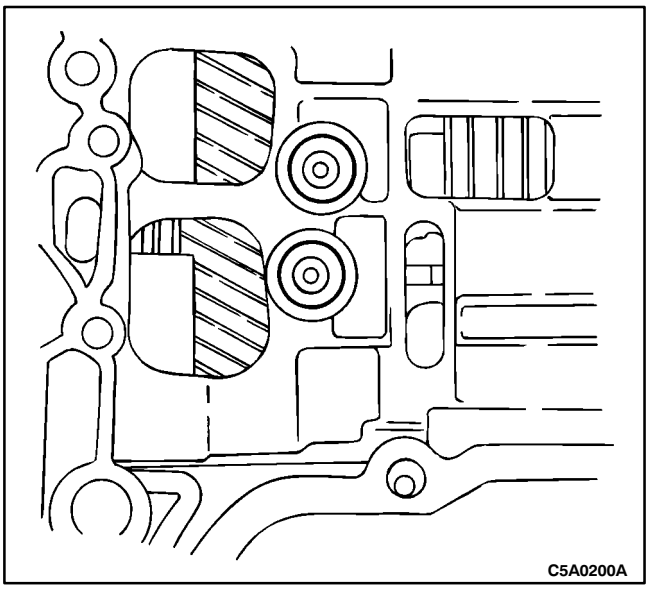

11. Remove and discard the two valve body apply seals.

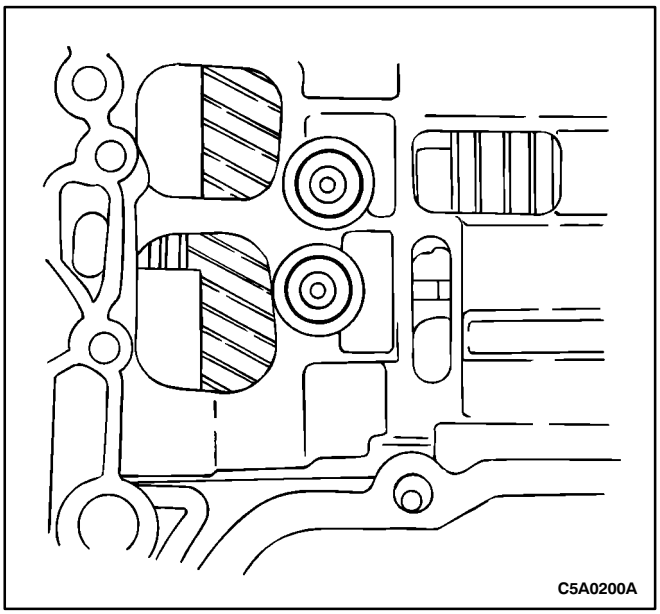

Installation Procedure

Notice: Lubricate the valve body apply seals with TOTAL FLUID HX.

1. Install two new valve body apply seals.

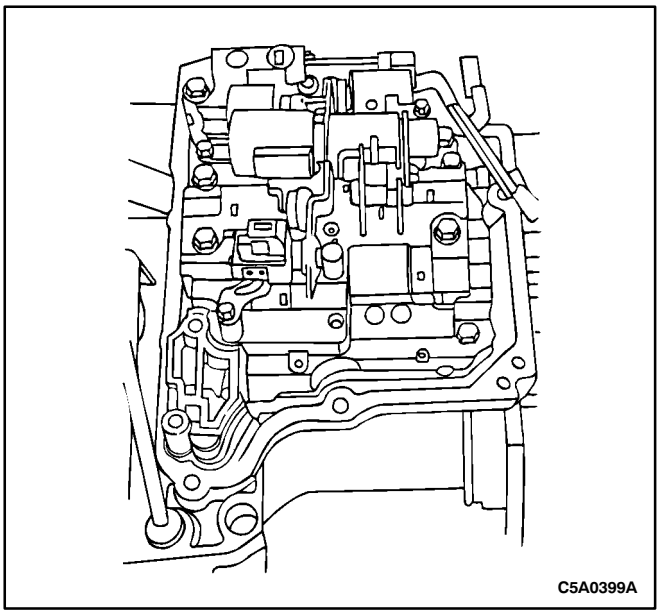

Caution: Use care not to damage the manual valve connecting rod or the lever.

2. Support and position the valve body onto the transaxle case. While supporting the valve body, carefully connect the manual valve connecting rod to the lever and install one of the valve body bolts hand tight. Install the remaining six valve body retaining bolts hand tight.

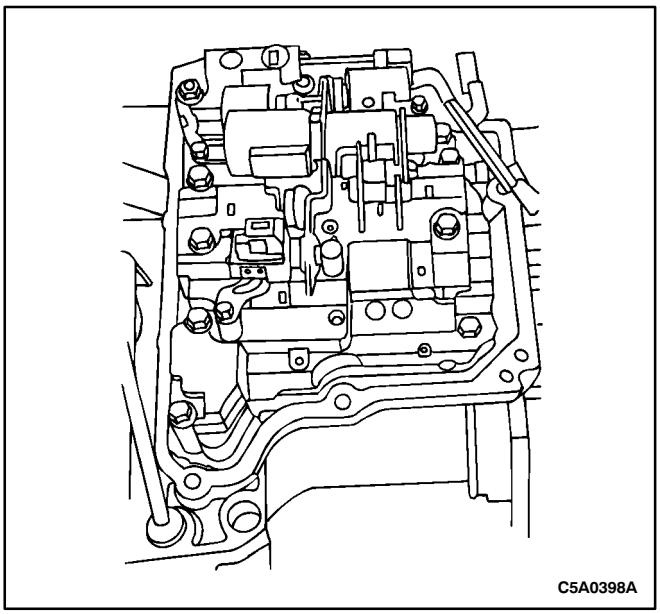

3. Install the suction cover and suction cover retaining bolts hand tight.

Tighten

Tighten the valve body and suction cover retaining bolts to 6-7 N•m (53-62 lb-in).

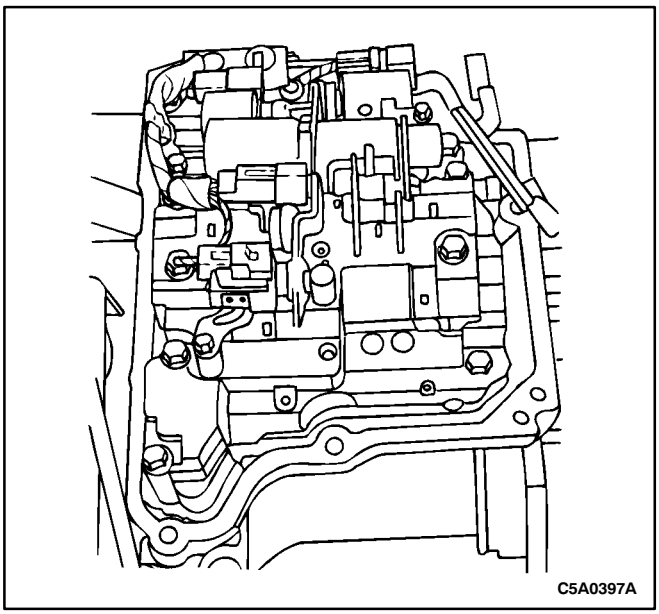

4. Connect the four valve body solenoid electrical connectors.

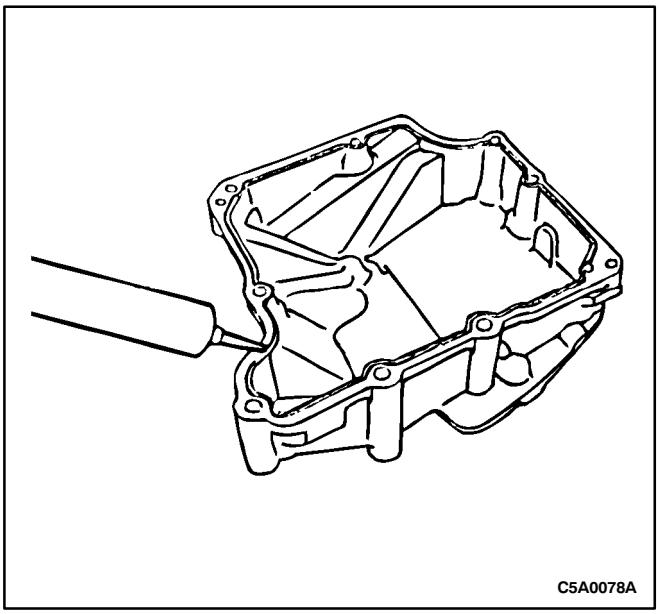

Notice: Remove the old gasket material from the valve body cover and mating surface of transaxle.

5. Apply a bead of silicone sealant on the valve body cover.

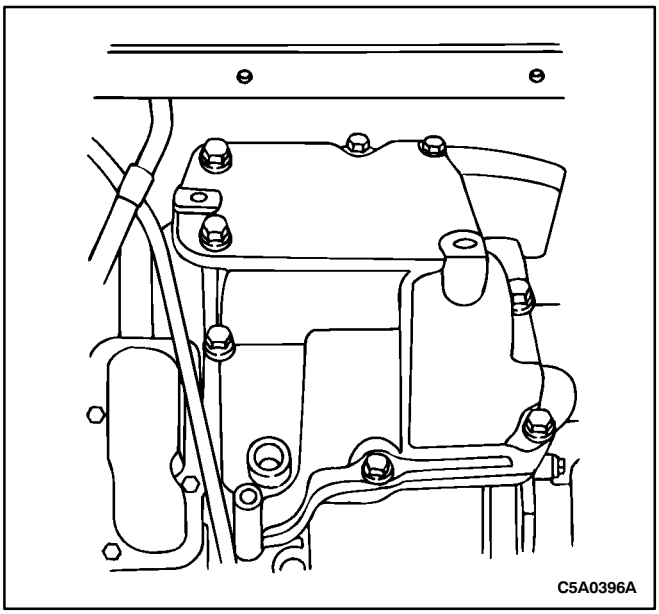

6. Install the valve body cover and the eight bolts.

Tighten

Tighten the valve body cover bolts to 20-30 N•m (15-22 lb-ft).

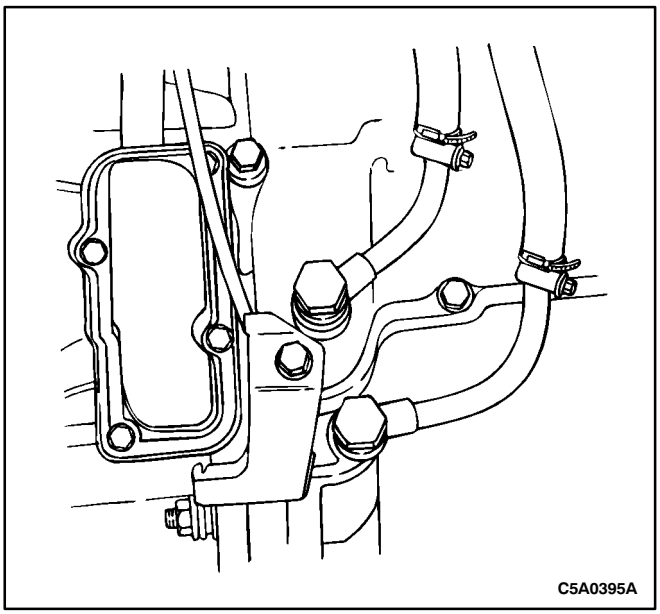

7. Connect the fluid cooler pipes at the valve body cover.

Tighten

Tighten the fluid cooler pipe bolts to 20-29 N•m (15-22 lb-ft).

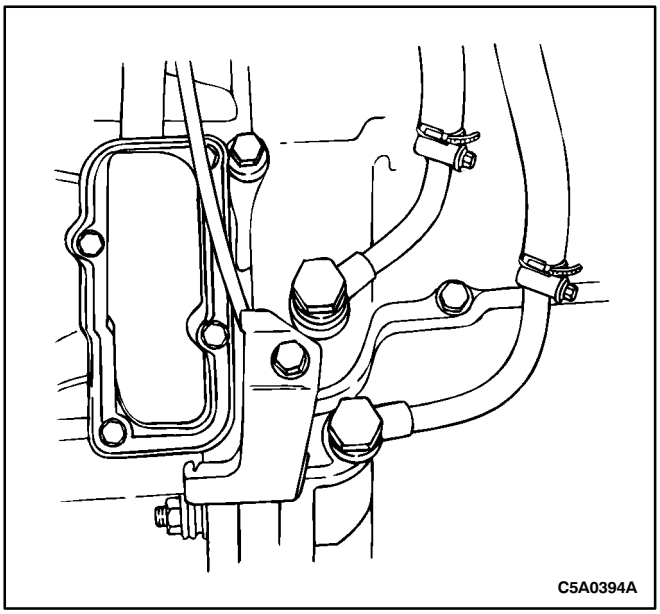

8. Position the transmission fluid temperature (TFT) sensor protector bracket, then install the nut and bolt.

Tighten

Tighten the TFT sensor protector bracket nut and bolt to 20-29 N•m (15-22 lb-ft).

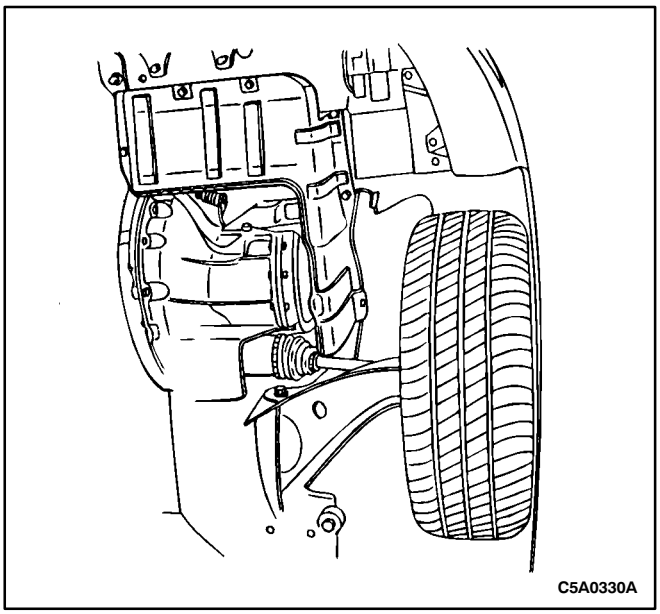

9. Install the engine under cover.
10. Lower the vehicle.
11. Connect the negative battery cable.
12. Fill the transaxle with fluid. Refer to “Fluid Drain Procedure” in this section.

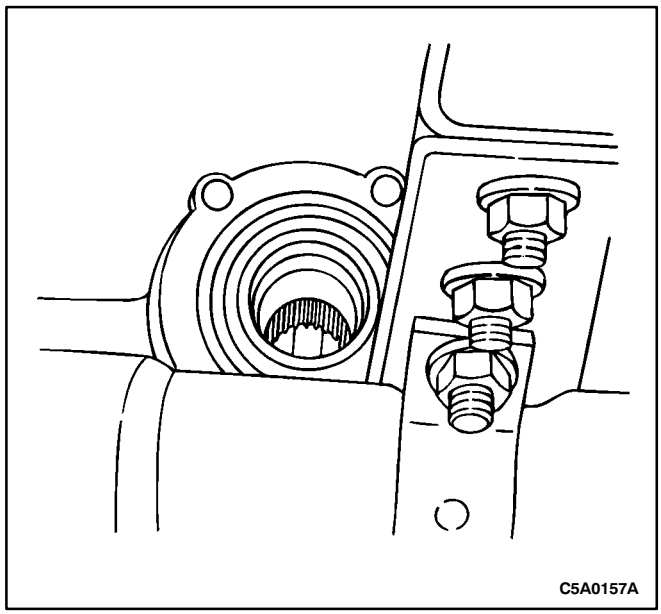

DRIVE AXLE FLUID SEALS

Removal Procedure

1. Raise and suitably support the vehicle.
2. Remove the wheels. Refer to *Section 2E, Tires and Wheels.*
3. Disconnect the automatic transaxle drive axles from the automatic transaxle. Refer to *Section 3A, Automatic Transaxle Drive Axle.*
4. Remove the right side drive axle fluid seal.

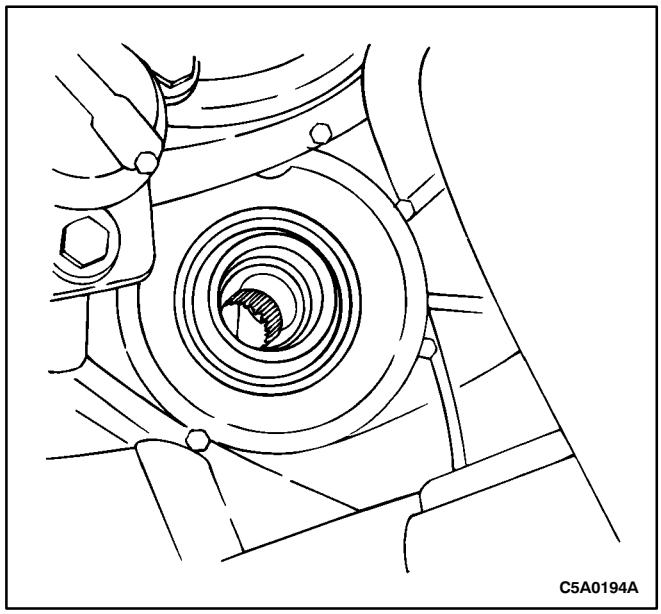

5. Remove the left side drive axle fluid seal.

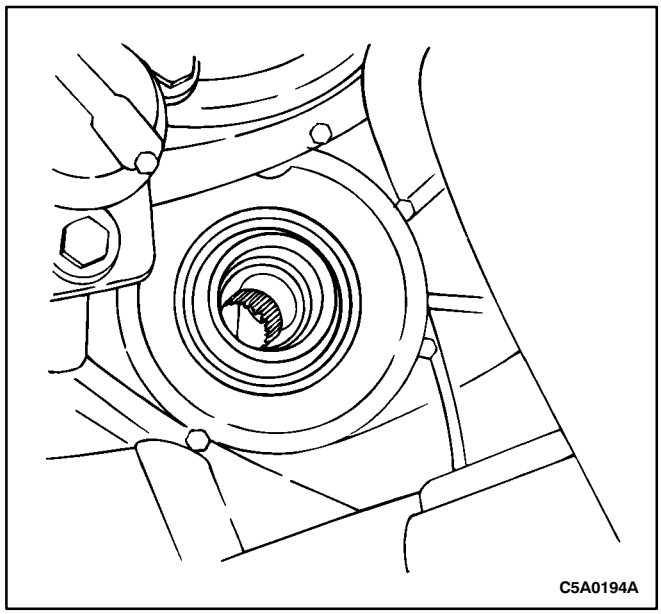

Installation Procedure

1. Install the left side drive axle fluid seal.

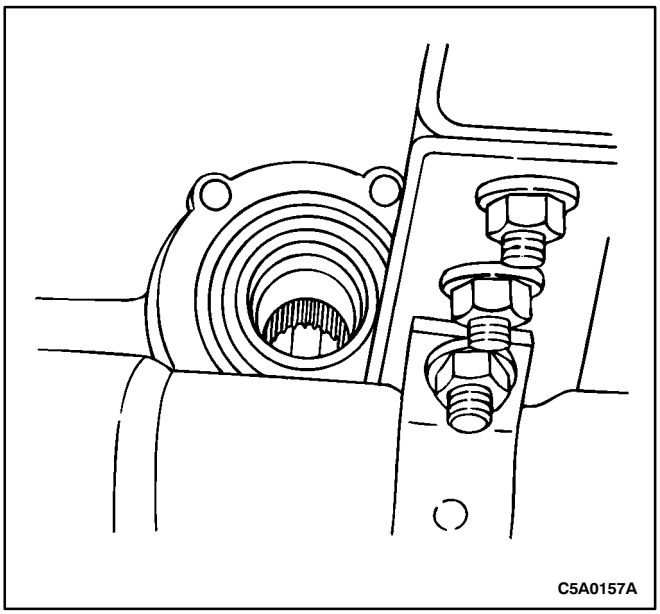

2. Install the right side drive axle fluid seal.
3. Connect the automatic transaxle drive axles to the automatic transaxle. Refer to *Section 3A, Automatic Transaxle Drive Axle.*
4. Install the wheels. Refer to *Section 2E, Tires and Wheels.*
5. Lower the vehicle.

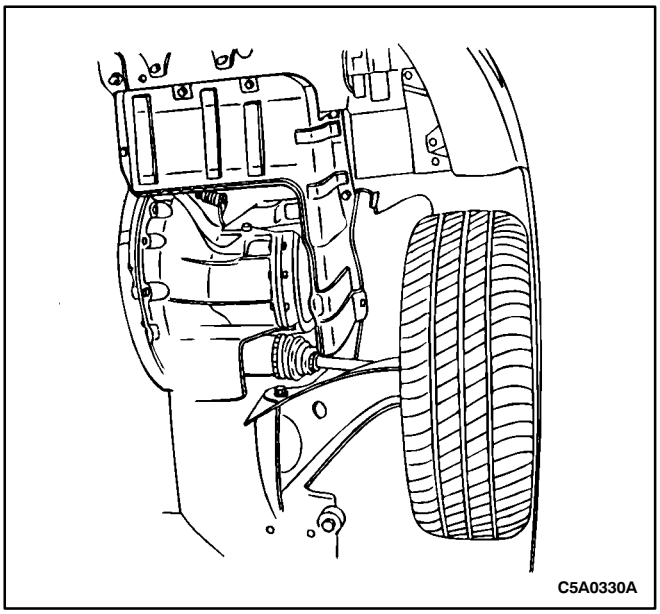

FLUID COOLER PIPES AND HOSES

Removal Procedure

1. Raise and support the vehicle. Refer to *Section OB, General Information.*
2. Drain the transaxle fluid. Refer to “Fluid Drain Procedure” in this section.
3. Remove the engine undercover.

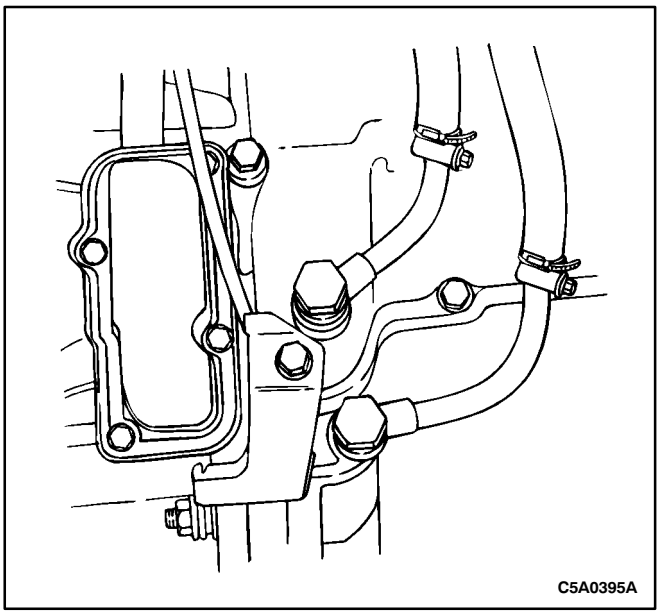

4. Remove the two fluid cooler pipe bolts from the transaxle and allow the fluid to drain.

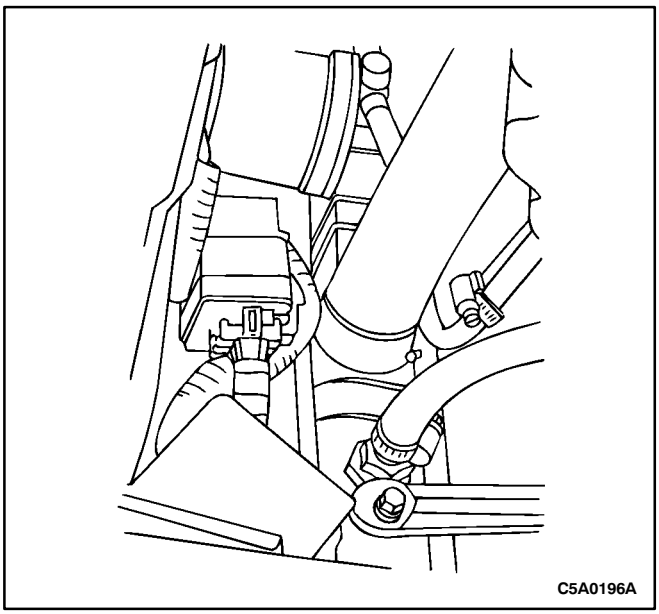

5. Disconnect hose clamp from the lower hose at the radiator, then remove the fluid cooler pipe bolt from the upper radiator.
6. Remove the fluid cooler pipes and hoses.

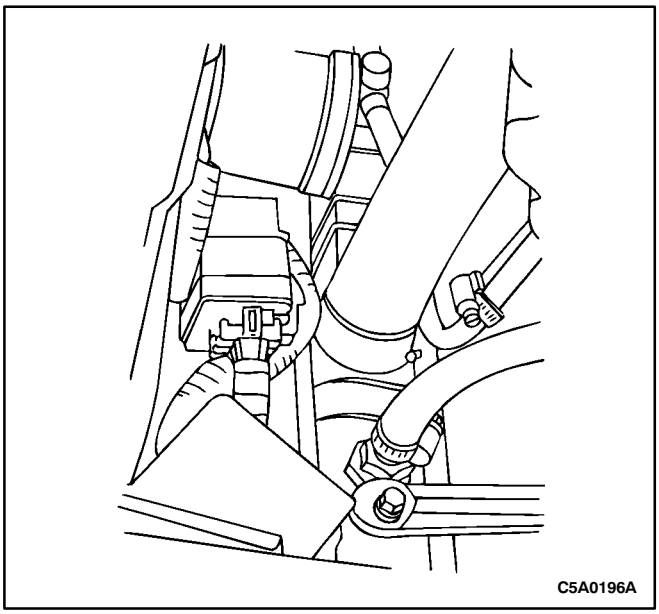

Installation Procedure

1. Position the fluid cooler pipes at the radiator. Connect the lower hose at the radiator and tighten the clamp, then install the fluid cooler pipe and bolt at the upper radiator.

   Tighten

   Tighten the fluid cooler pipe bolt to 20-29 N•m (15-22 lb-ft).

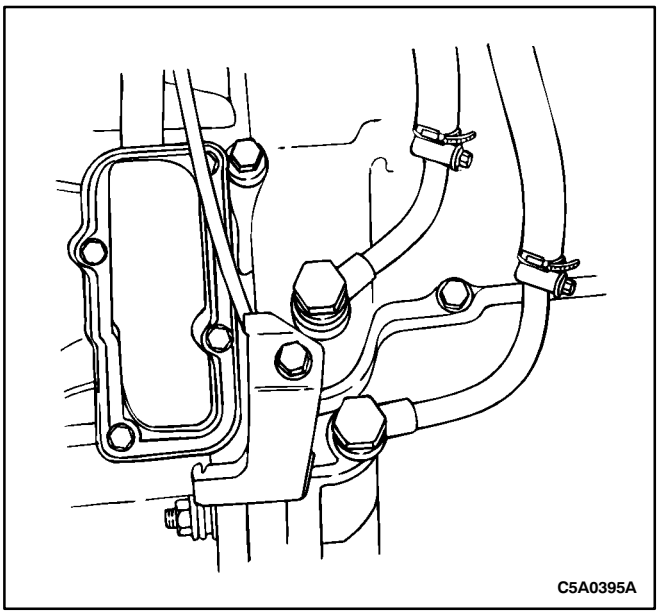

2. Position the fluid cooler pipes at the transaxle and install the fluid cooler pipe bolts.

   Tighten

   Tighten the fluid cooler pipe bolt to 20-29 N•m (15-22 lb-ft).

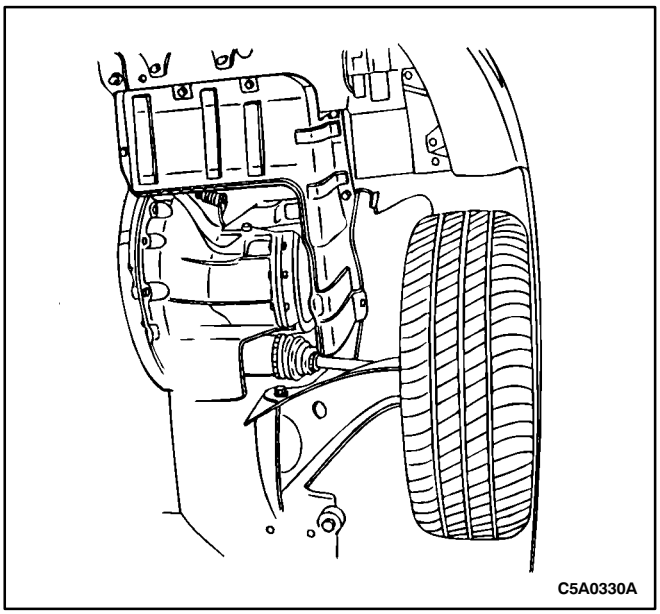
C5A0330A

3. Install the engine undercover.
4. Lower the vehicle.
5. Fill the transaxle with fluid. Refer to “Fluid Drain Procedure” in this section.

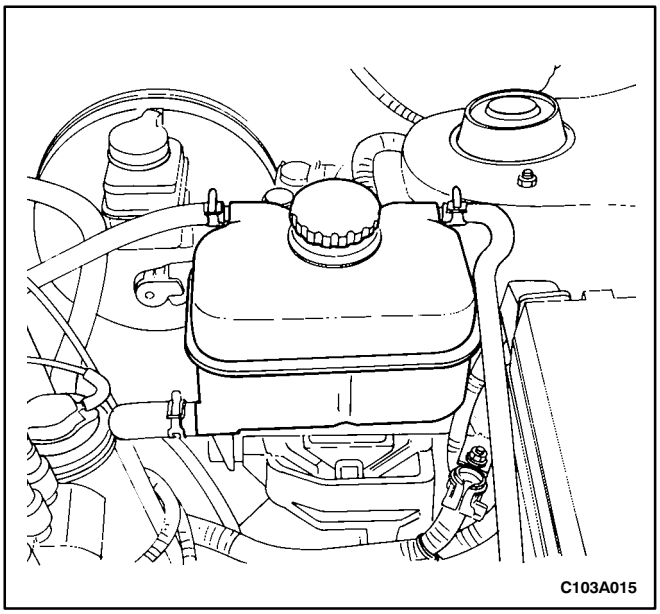
C103A015

TRANSAXLE LEFT MOUNT

Tools Required

J-28467-B Engine Support Fixture

Removal Procedure

1. Disconnect the battery. Remove the battery and the battery tray.
2. Remove the coolant surge tank.

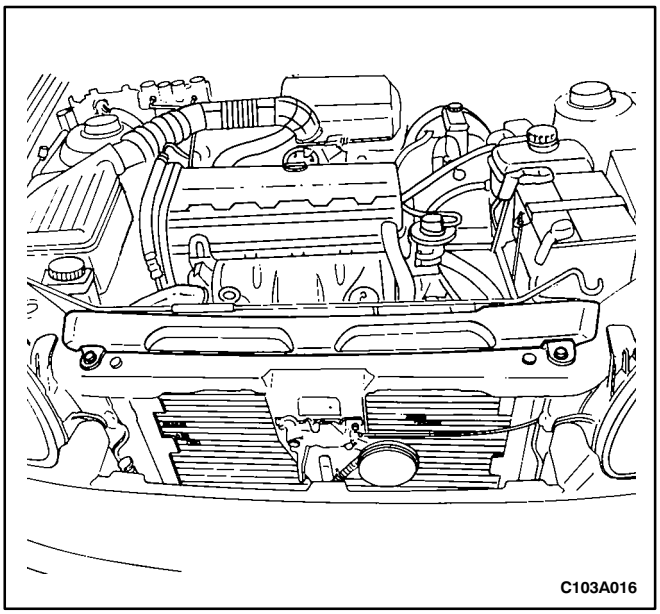
C103A016

3. Remove the upper radiator cover.

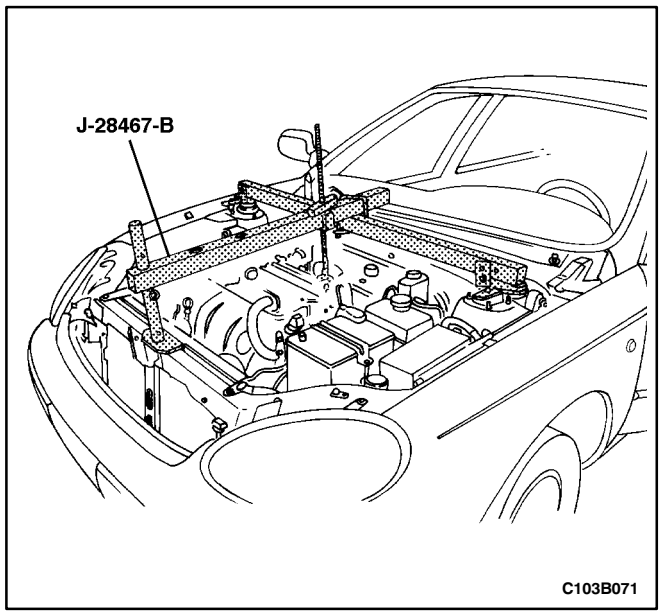

4. Attach the engine support fixture J-28467-B to the engine.
5. Support the engine with the engine support fixture J-28467-B.

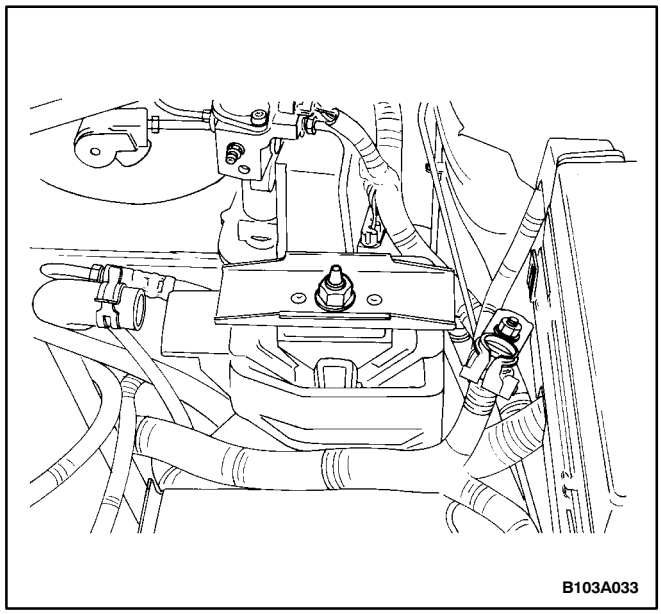

6. Remove the bolt that connects the transaxle left mount to the left transaxle bracket.

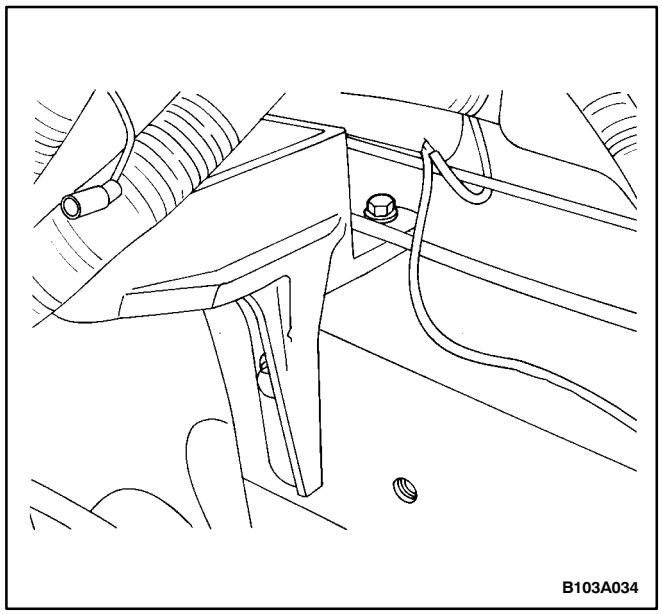

7. Remove the bolts that connect the transaxle left mount to the vehicle. Two bolts are on each side of the mount.
8. Remove the transaxle left mount.

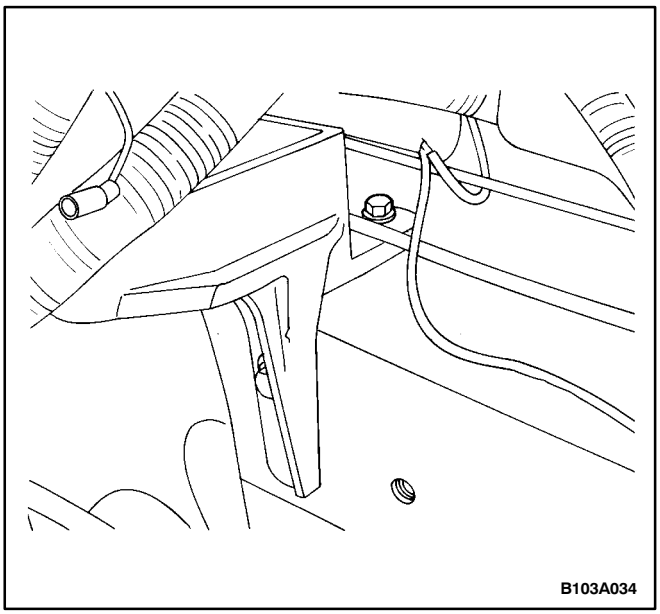

Installation Procedure

1. Install the transaxle left mount.
2. Install the bolts that connect the transaxle left mount to the vehicle.

Tighten

Tighten the transaxle left mount-to-body connecting bolts to 58 N•m (43 lb-ft).

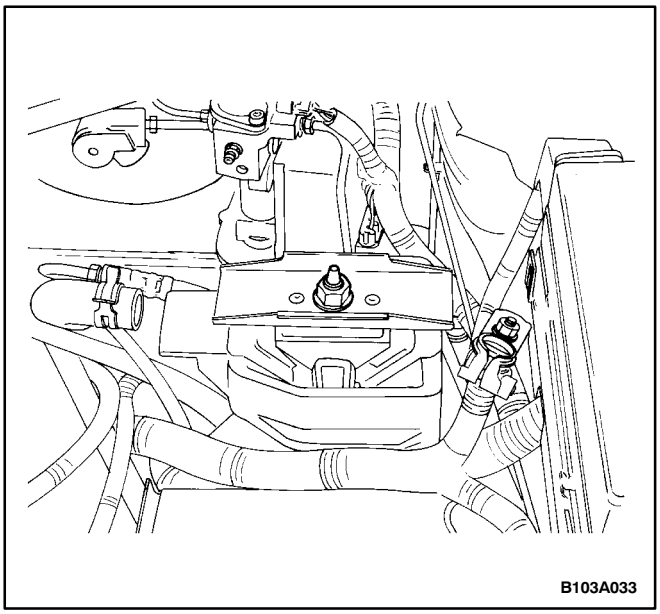

3. Install the bolt that connects the transaxle left mount to the transaxle left bracket.

Tighten

Tighten the transaxle left mount-to-transaxle left bracket connecting bolt to 48 N•m (35 lb-ft).

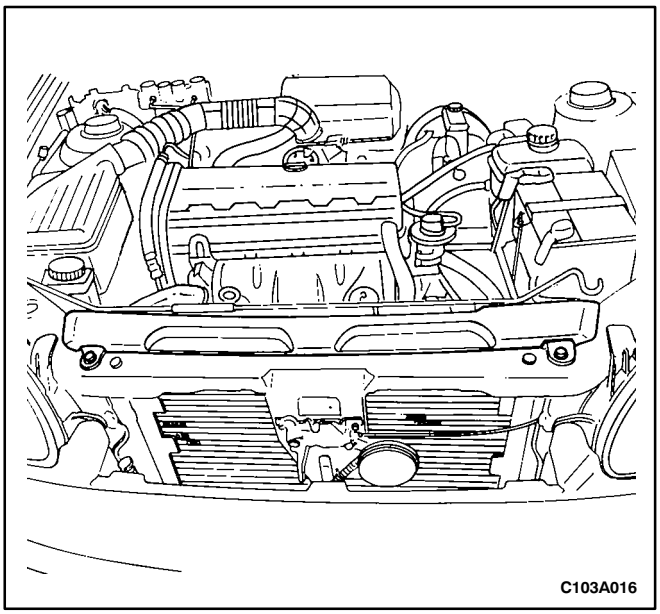

4. Remove the engine support fixture J-28467-B from the engine.
5. Install the upper radiator cover.

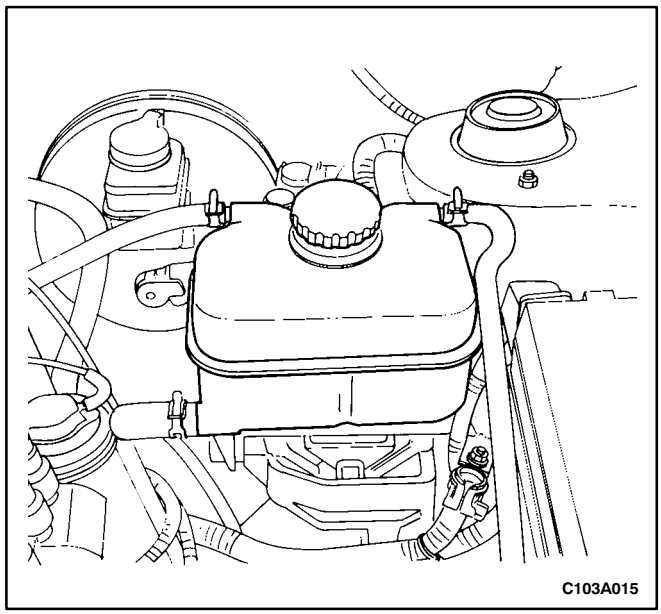

6. Install the coolant surge tank with the bolts.

   Tighten

   Tighten the coolant surge tank mounting bolts to 25 N•m (18 lb-ft).

7. Install the battery tray and the battery. Connect the battery.

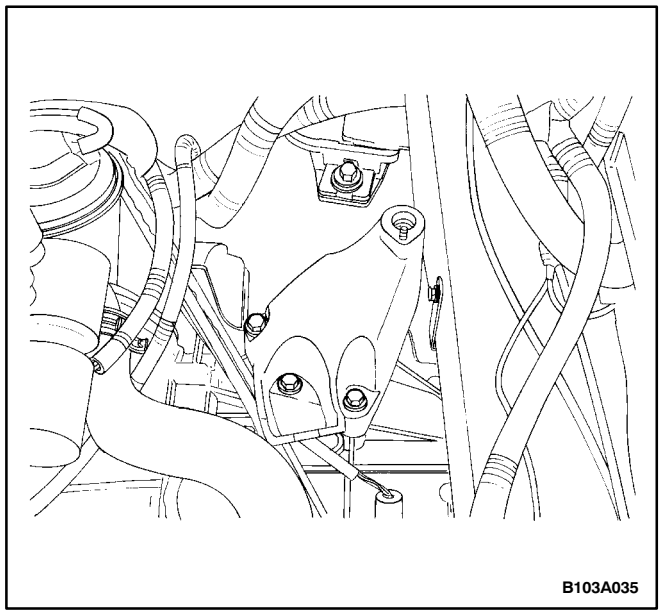

TRANSAXLE LEFT BRACKET

Removal Procedure

1. Remove the transaxle left mount. Refer to “Transaxle Left Mount” in this section.
2. Remove the bolts that connect the transaxle to the transaxle left bracket.
3. Remove the transaxle left bracket.

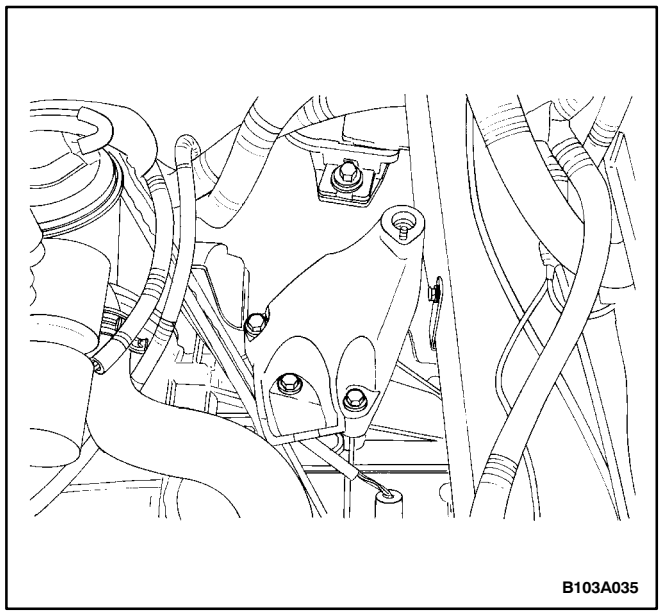

Installation Procedure

1. Install the transaxle left bracket.
2. Install the bolts that connect the transaxle left bracket to the transaxle.

   Tighten

   Tighten the transaxle left bracket connecting bolts to 48 N•m (35 lb-ft).

3. Install the transaxle left mount. Refer to “Transaxle Left Mount” in this section.

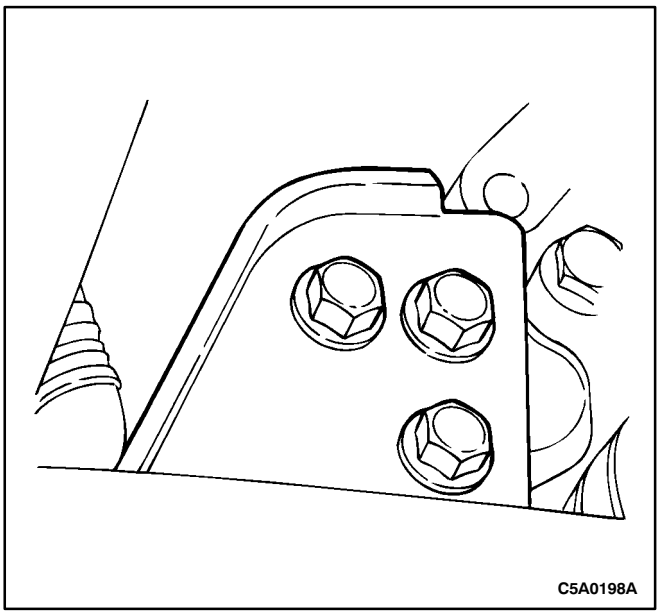

TRANSAXLE CENTER BRACKET

Removal Procedure

1. Remove the center member from the vehicle. Refer to *Section 9N, Frame and Underbody.*
2. Remove the bolts that connect the transaxle center bracket to the transaxle.
3. Remove the transaxle center bracket.

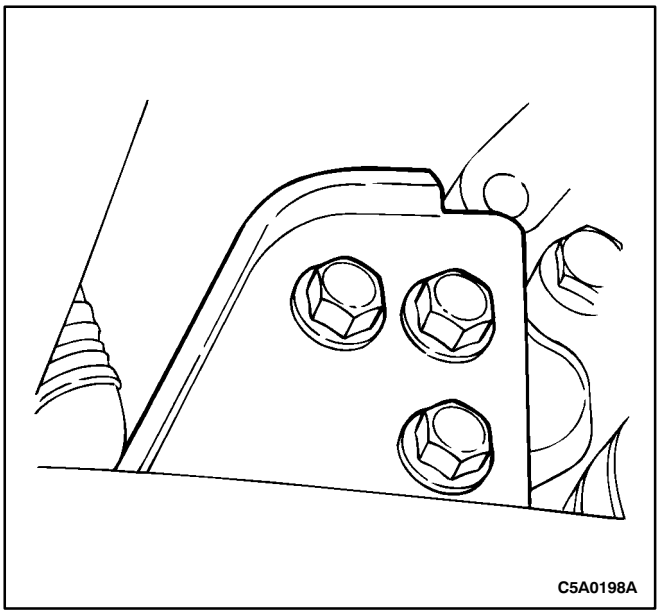

Installation Procedure

1. Install the transaxle center bracket to the transaxle with the bolts.

   Tighten

   Tighten the transaxle center bracket-to-transaxle bolts to 48 N•m (35 lb-ft).
2. Install the center member into the vehicle. Refer to *Section 9N, Frame and Underbody.*

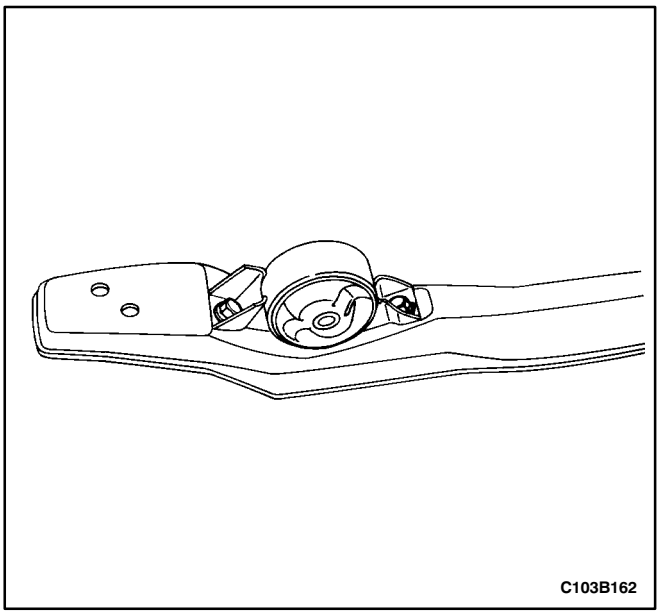

TRANSAXLE CENTER MOUNT

Removal Procedure

1. Remove the center member from the vehicle. Refer to Section 9N, Frame and Underbody.
2. Remove the transaxle center mount-to-center member bolts.
3. Remove the transaxle center mount.

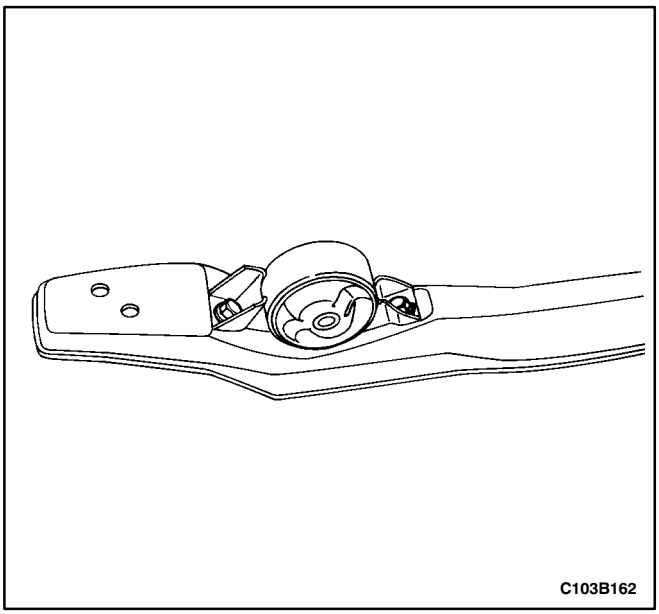

Installation Procedure

1. Install the transaxle center mount.
2. Install the transaxle center mount-to-center member bolts.

   Tighten

   Tighten the transaxle center bracket-to-transaxle bolts to 65 N•m (48 lb-ft).
3. Install the center member into the vehicle. Refer to *Section 9N, Frame and Underbody.*

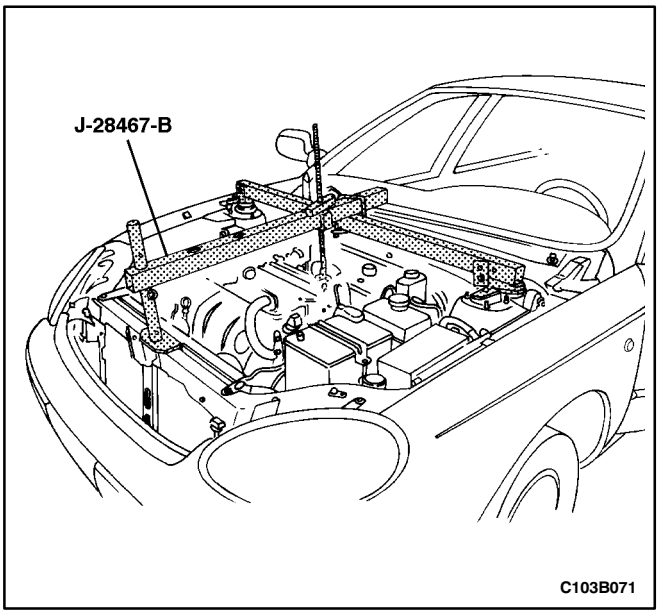

TRANSAXLE ASSEMBLY

Removal Procedure

1. Install Engine Support Fixture J-28467-B to support the engine.
2. Remove the battery and battery tray. Refer to *Section 1E, Engine Electrical.*
3. Remove the transaxle left mount. Refer to “Transaxle Left Mount” in this section.

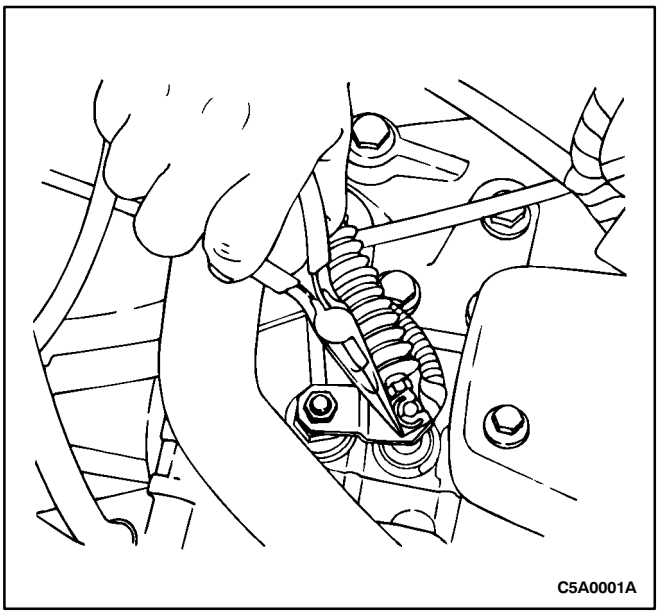

4. Remove the clip retaining the shift control cable to the park/neutral position (PNP) switch, then disconnect the cable.

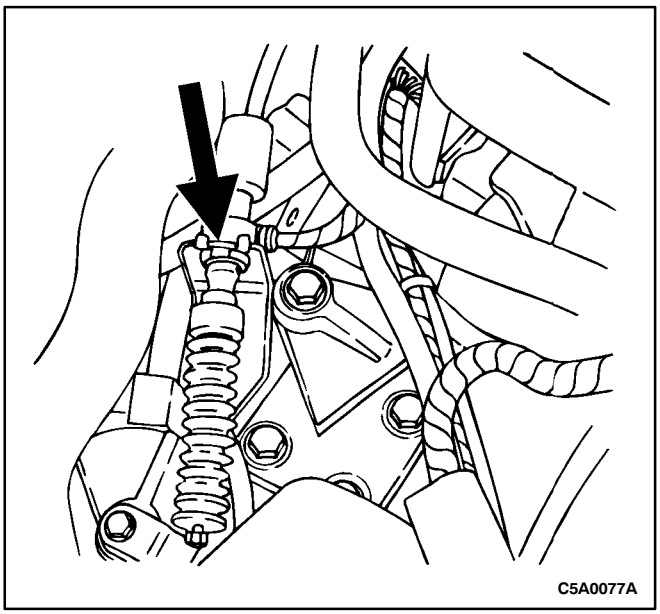

5. Remove the clip retaining the shift control cable to the bracket, then disconnect the cable and position aside.

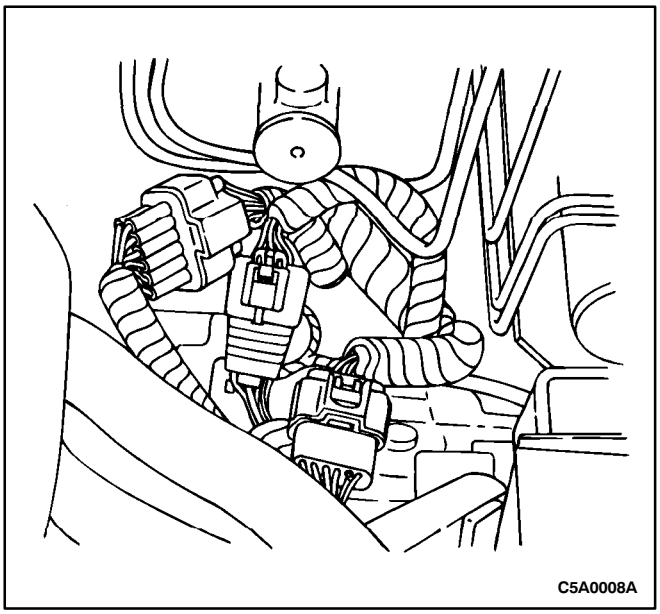

6. Disconnect the 11-pin PNP switch and 12-pin transaxle sensor electrical connectors.

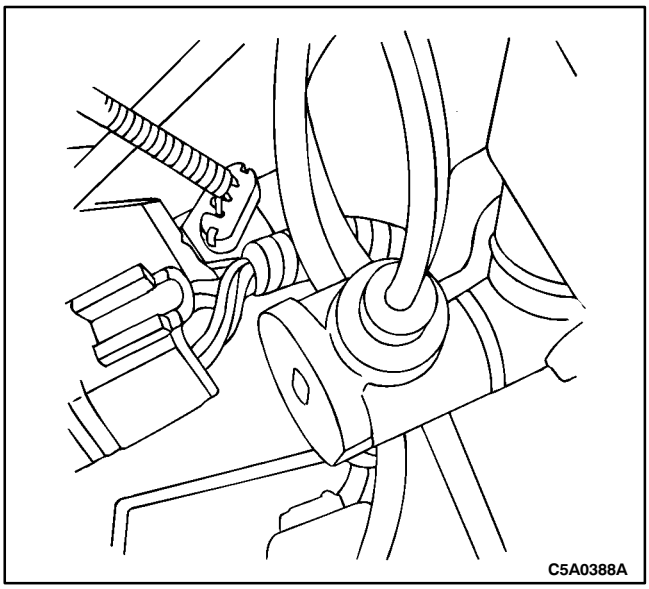

7. Disconnect the vehicle speed sensor (VSS) electrical connector.
8. Disconnect the vent tube from the top of the transaxle.
9. Remove the three upper transaxle-to-engine mounting bolts.
10. Raise and support the vehicle. Refer to *Section OB, General Information.*

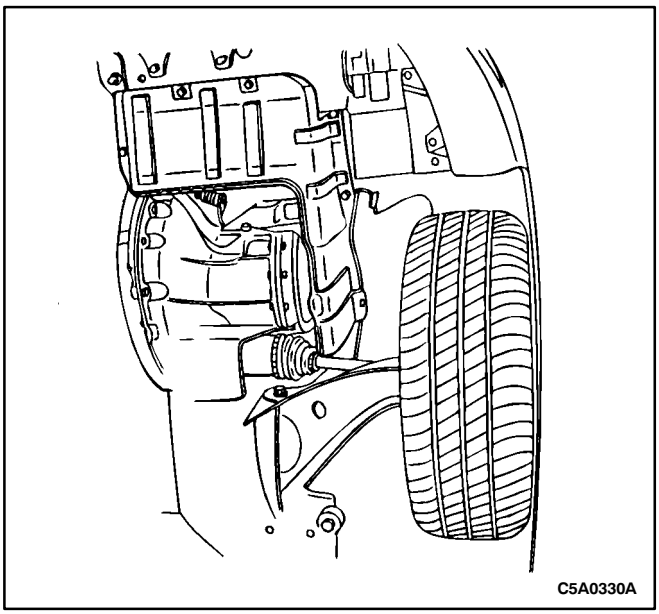

11. Remove the engine under cover.
12. Drain the transaxle fluid. Refer to “Fluid Drain Procedure” in this section.

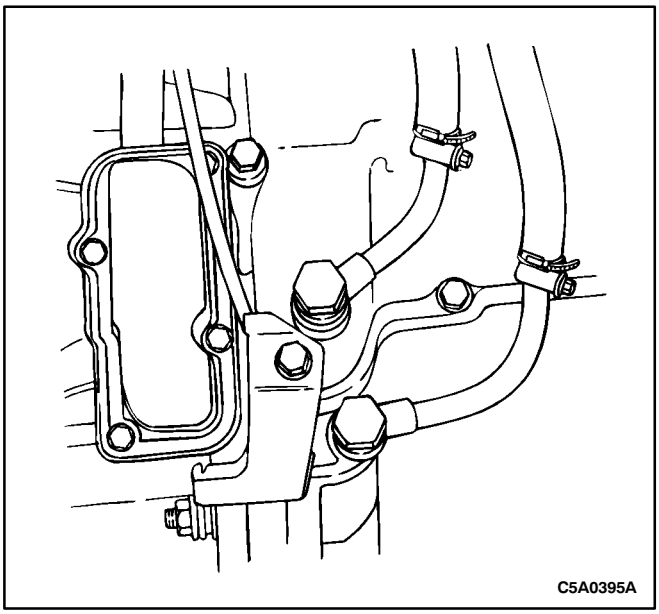

13. Disconnect the fluid cooler pipes at the valve body cover and allow the fluid to drain, then position the pipes aside.
14. Remove the left and right drive axle assemblies. Refer to *Section 3A, Automatic Transaxle Drive Axle.*
15. Remove the center member. Refer to *Section 9N, Frame and Underbody.*

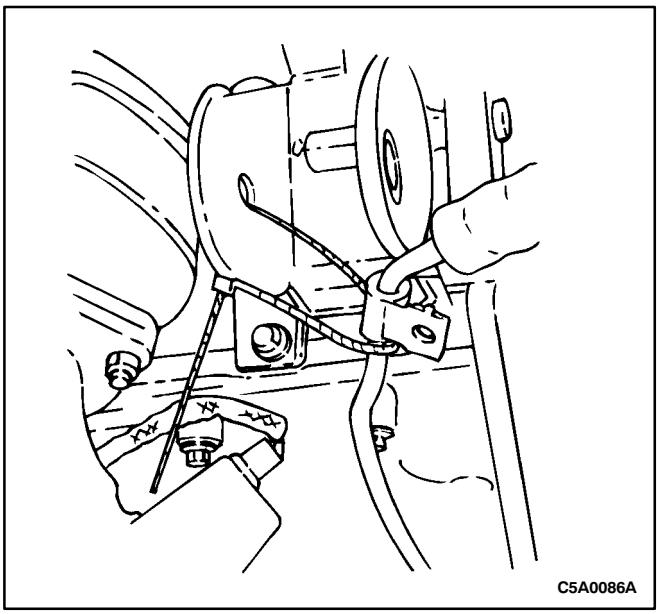

16. Position the power steering hose away from the installation area and secure it with a plastic tie strap.
17. Remove the starter motor. Refer to *Section 1E, Engine Electrical.*
18. Remove the two engine-to-transaxle retaining bolts next to the starter motor opening.

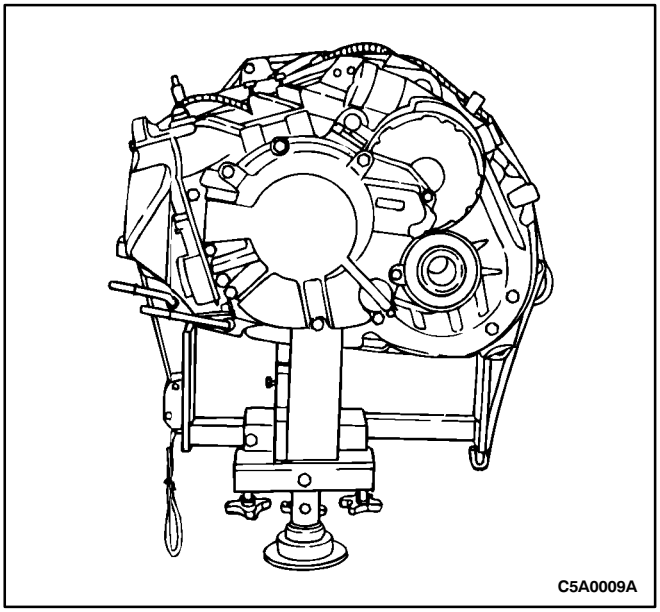

19. Secure the transaxle to a transaxle jack.

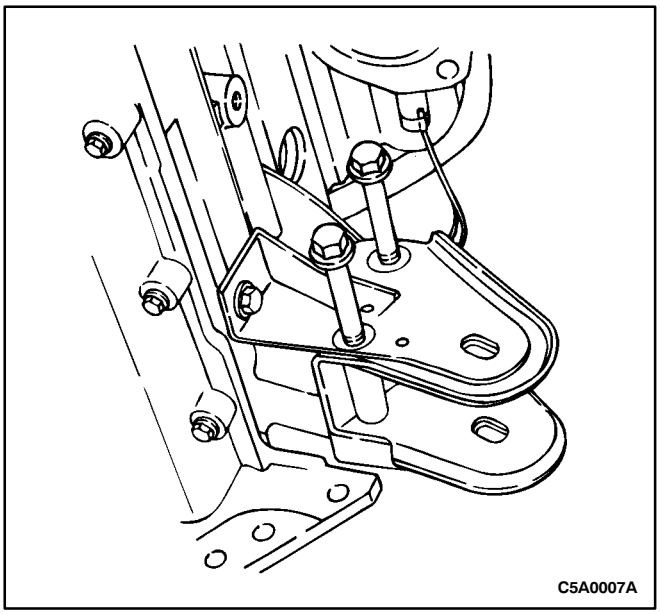

20. Remove the front engine mount bracket.

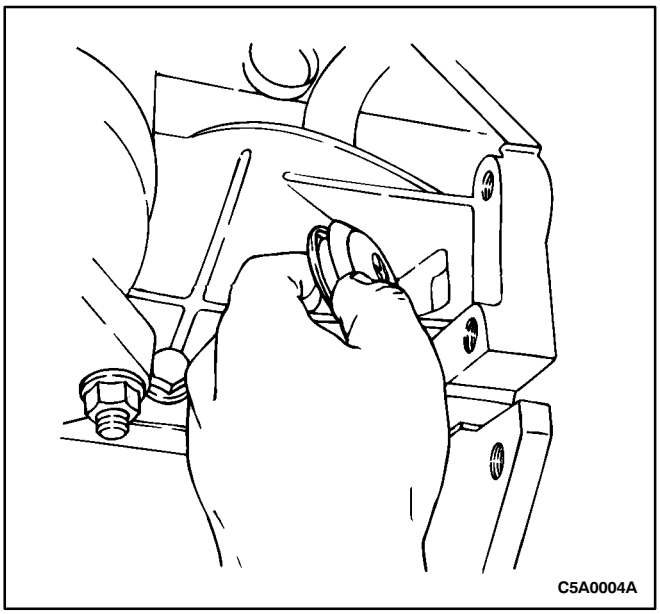

21. Remove the torque converter access cover, then remove the six torque converter-to-flex plate retaining bolts.
22. Remove the oil pan-to-transaxle case retaining bolts.
23. Carefully remove the transaxle from the engine compartment.

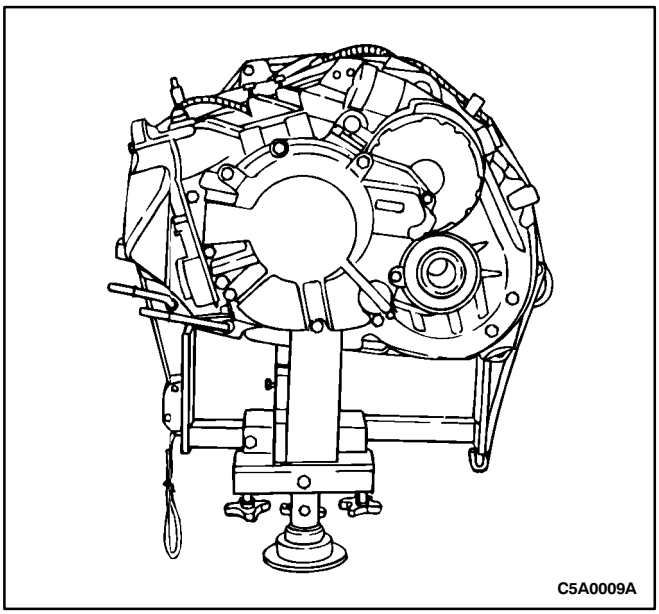

Installation Procedure

1. Secure the transaxle to the transaxle jack, then carefully position in the vehicle.

Notice: Do not tighten the retaining bolts at this time.

2. Install the oil pan-to-transaxle case retaining bolts hand tight.

Notice: Do not tighten the retaining bolts at this time.

3. Install the two engine-to-transaxle retaining bolts next to the starter motor opening hand tight.
4. Install the six torque converter-to-flex plate retaining bolts.

Tighten

Tighten the torque converter-to-flex plate retaining bolts to 60 N•m (44 lb-ft)

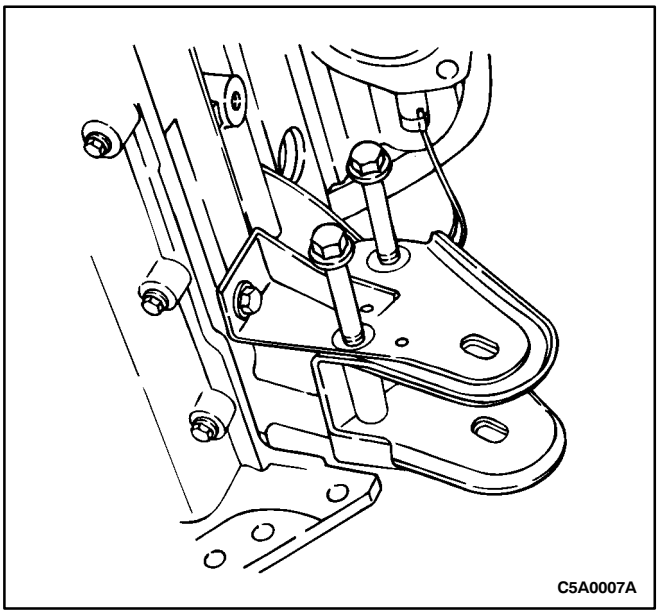

5. Install the front engine mount bracket.

Tighten

Tighten the front engine mount bracket-to-engine retaining bolts to 90 N•m (66 lb-ft).

Tighten the front engine mount bracket-to-transaxle through bolts to 90 N•m (66 lb-ft).

Tighten the oil pan-to-transaxle case retaining bolts to 40 N•m (30 lb-ft).

Tighten the two engine-to-transaxle retaining bolts next to the starter motor opening to 75 N•m (55 lb-ft).

6. Install the starter motor. Refer to *Section 1E, Engine Electrical.*
7. Remove the transaxle jack.
8. Install the center member. Refer to *Section 9N, Frame and Underbody.*

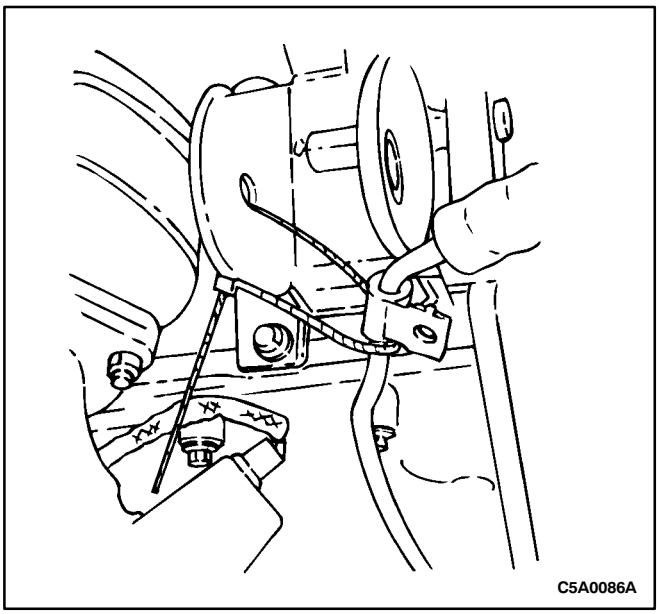

9. Cut the plastic tie strap. Position and secure the power steering hose to the center member.
10. Install the left and right drive axle assemblies. Refer to *Section 3A, Automatic Transaxle Drive Axle.*

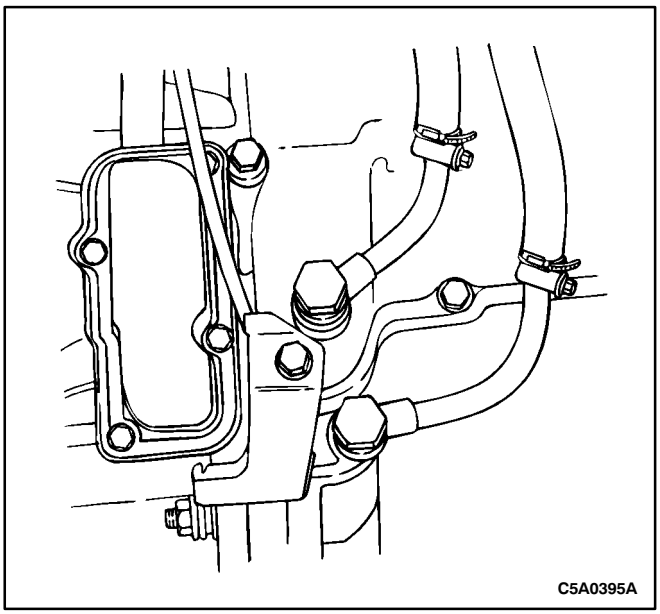

11. Connect the fluid cooler pipes at the valve body cover.

Tighten

Tighten the fluid cooler pipe bolts to 20-29 N•m (15-22 lb-ft).

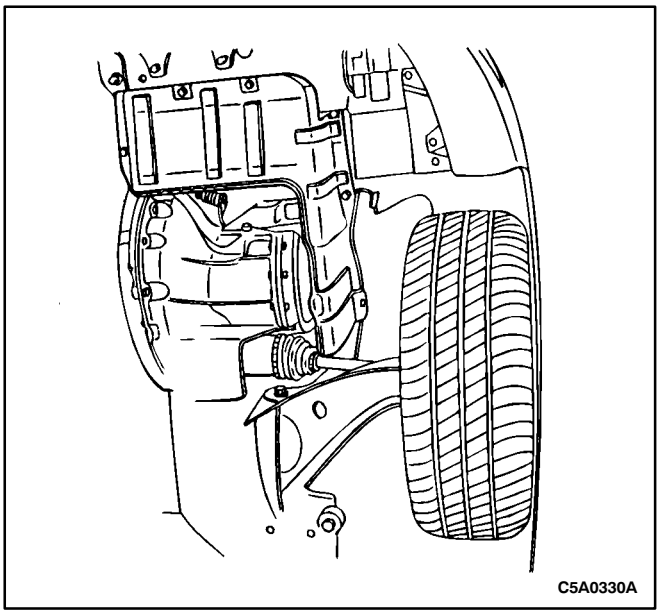

12. Install the engine under cover.
13. Lower the vehicle.
14. Install the three upper transaxle-to-engine mounting bolts.

Tighten

Tighten the three upper transaxle-to-engine mounting bolts to 75 N•m (55 lb-ft).

15. Connect the vent tube to the top of the transaxle.

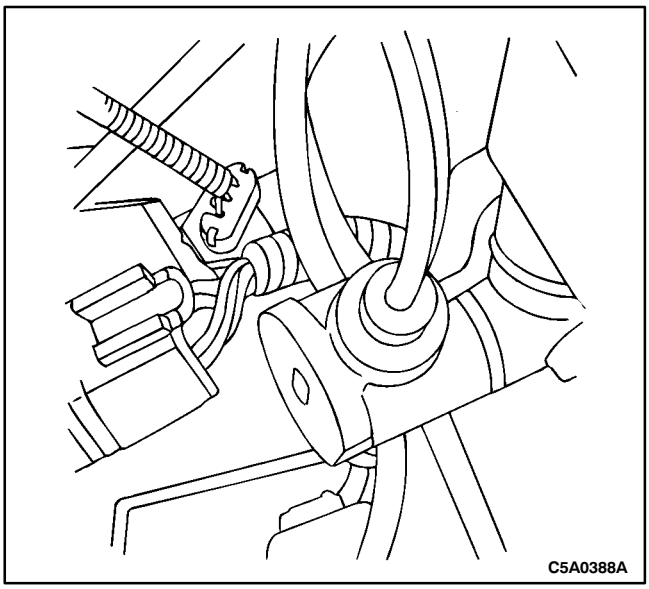

16. Connect the vehicle speed sensor (VSS) electrical connector.

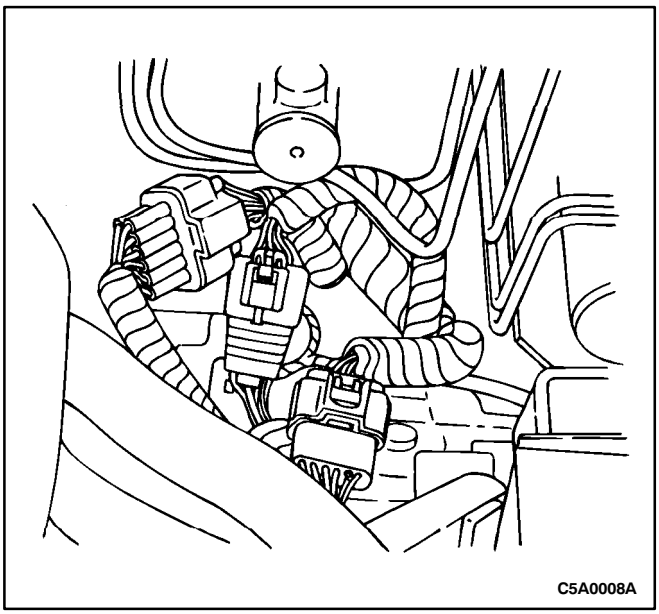

17. Connect the 11-pin PNP switch and 12-pin transaxle sensor electrical connectors.

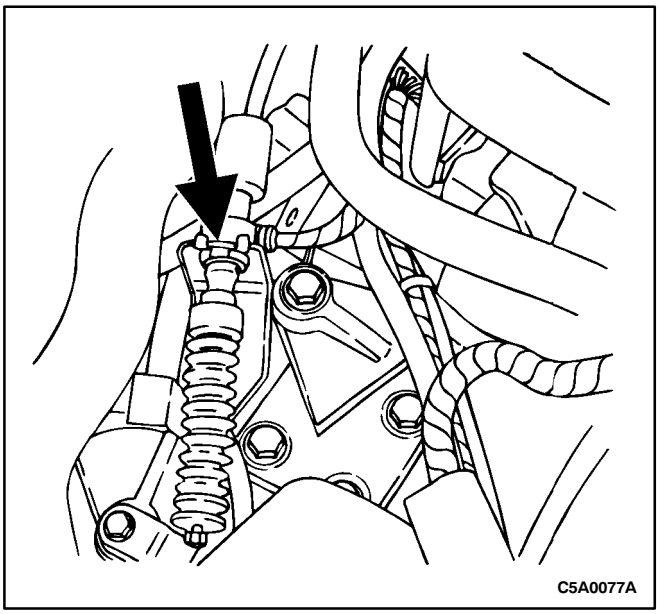

18. Position the shift control cable on the bracket, then install the retaining clip.

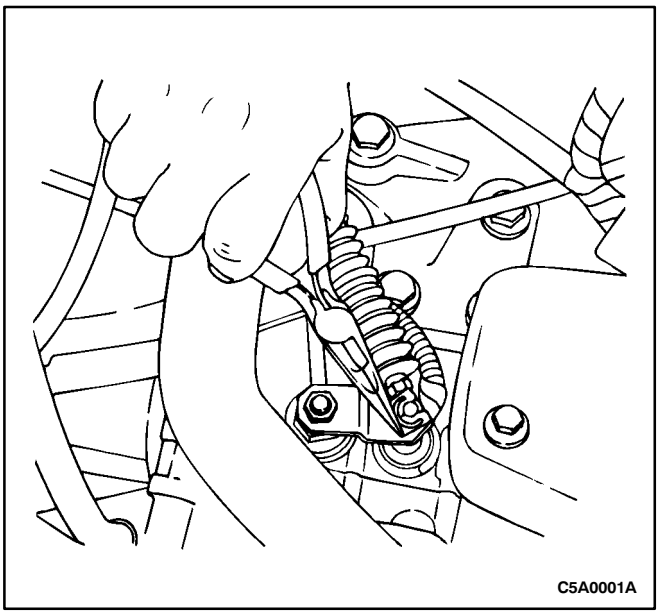

19. Connect the shift control cable to the park/neutral position (PNP) switch, then install the retaining clip.
20. Install the transaxle left mount. Refer to “Transaxle Left Mount” in this section.
21. Install the battery and battery tray. Refer to *Section 1E, Engine Electrical.*

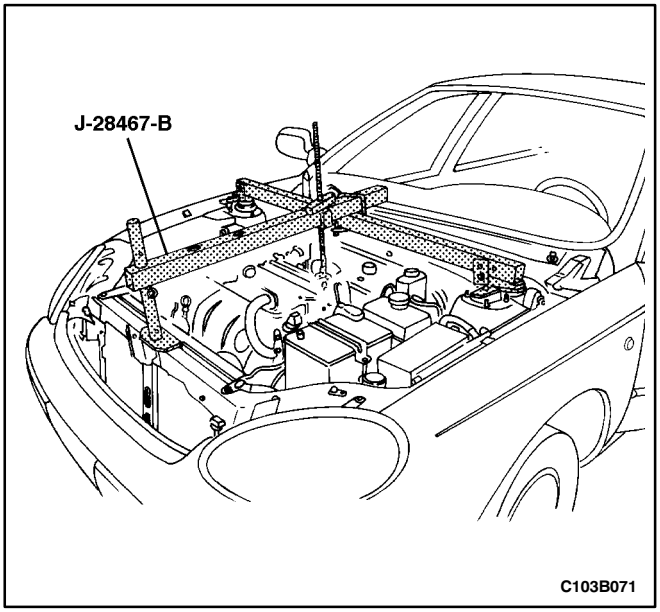

22. Remove Engine Support Fixture J-28467-B.
23. Fill the transaxle with fluid. Refer to “Fluid Drain Procedure” in this section.

UNIT REPAIR

MAJOR COMPONENT DISASSEMBLY

Tools Required

KM-210-A Bearing Puller

KM-709 Bearing Puller Adapter

Disassembly Procedure

1. Remove the torque converter.

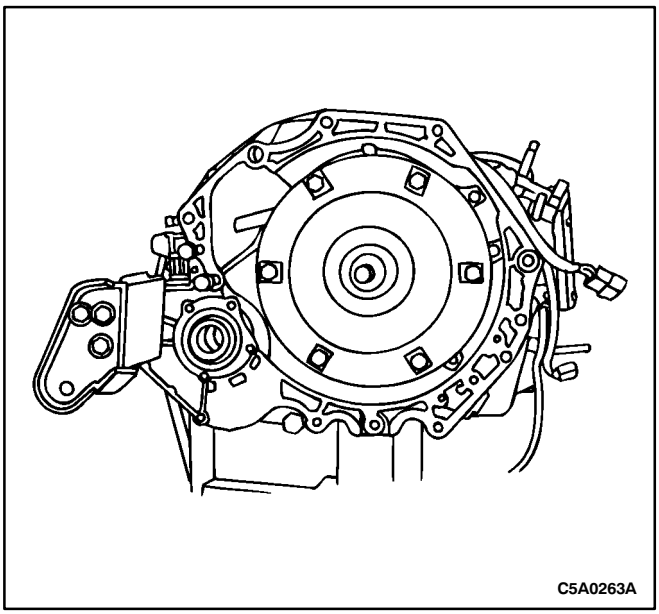

C5A0263A

Notice: Loosen the staked part of the washer before removing.

2. Remove the park/neutral position (PNP) switch nut and washer.

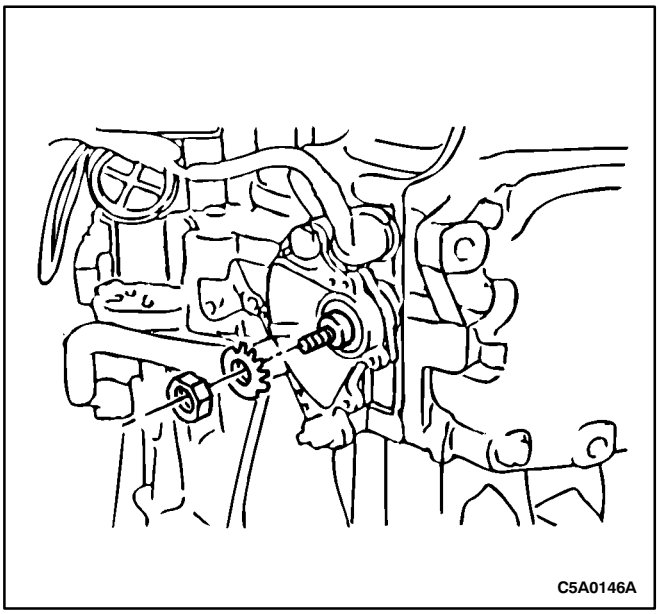

C5A0146A

3. Remove the two bolts and the PNP switch.

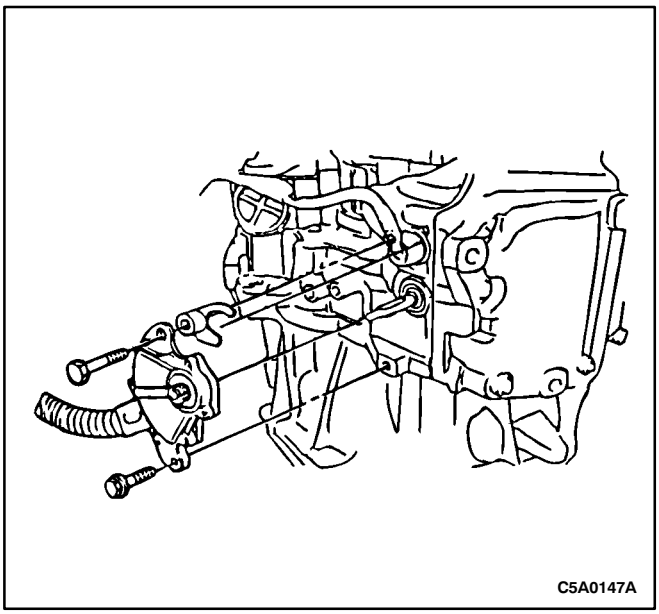

C5A0147A

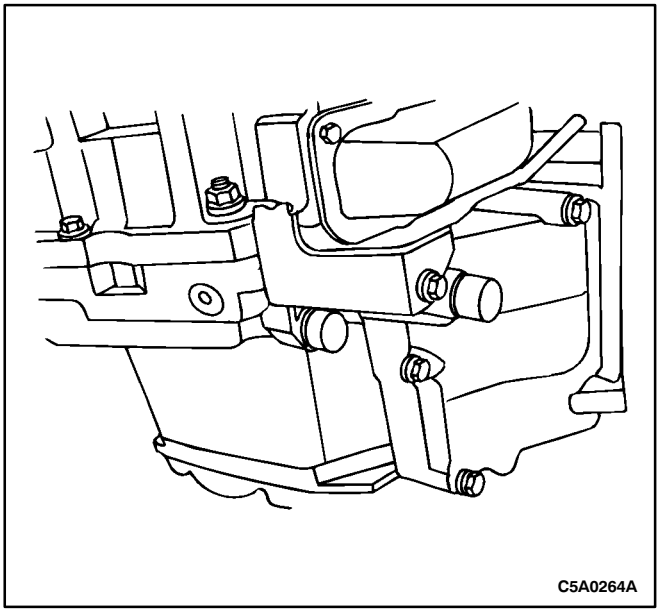

4. Remove the Transmission Fluid Temperature (TFT) sensor protector bracket.

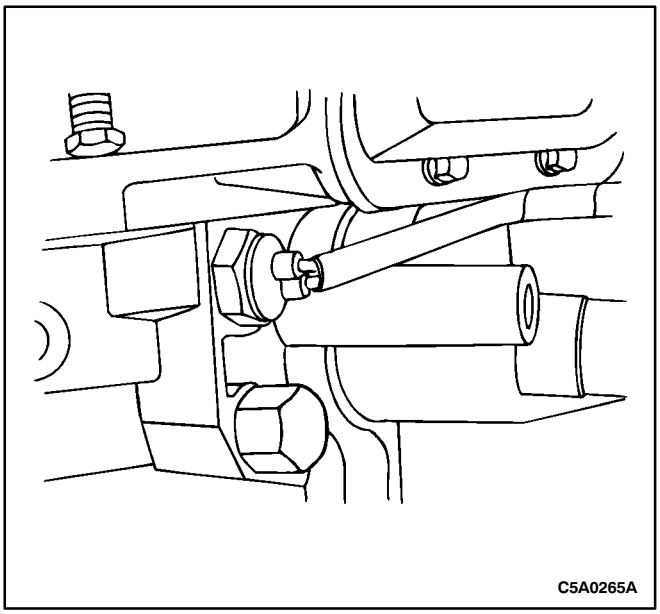

Notice: Remove and discard the O-ring.

5. Remove the Transmission Fluid Temperature (TFT) sensor.

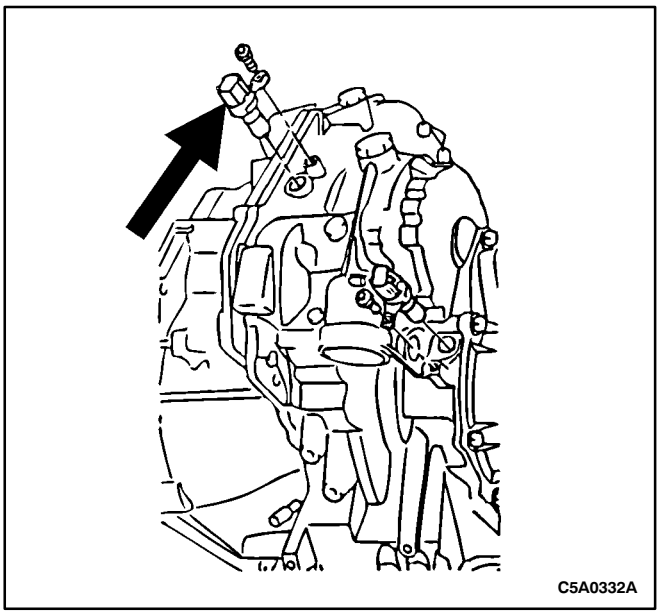

6. Remove the input shaft speed (ISS) and output shaft speed (OSS) sensors.

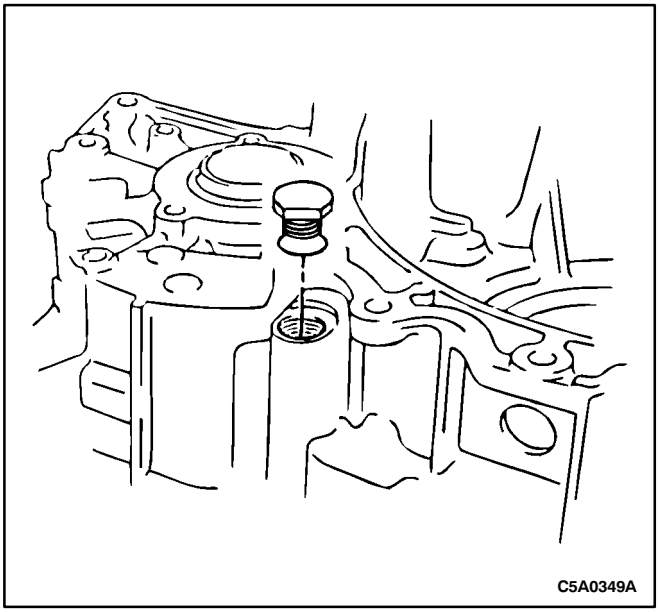

Notice: Discard the gasket.

7. Remove the drain plug and gasket.

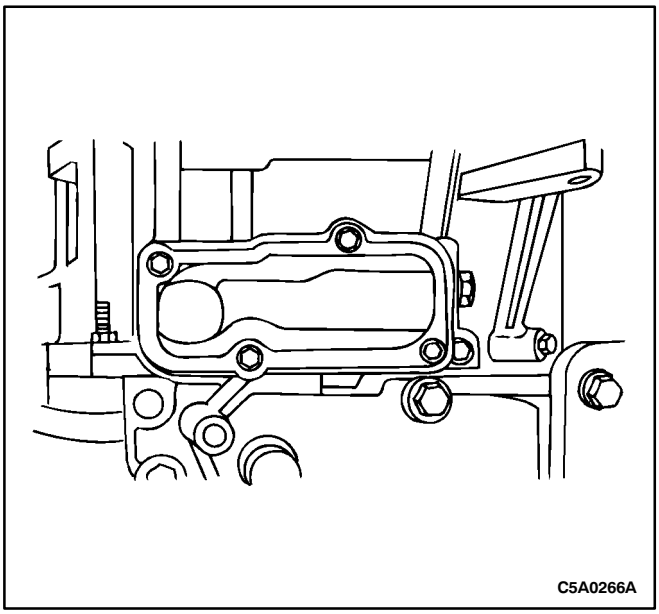

Caution: Be careful not to damage the contact surfaces of the transaxle housing.

8. Remove the transaxle housing cover.

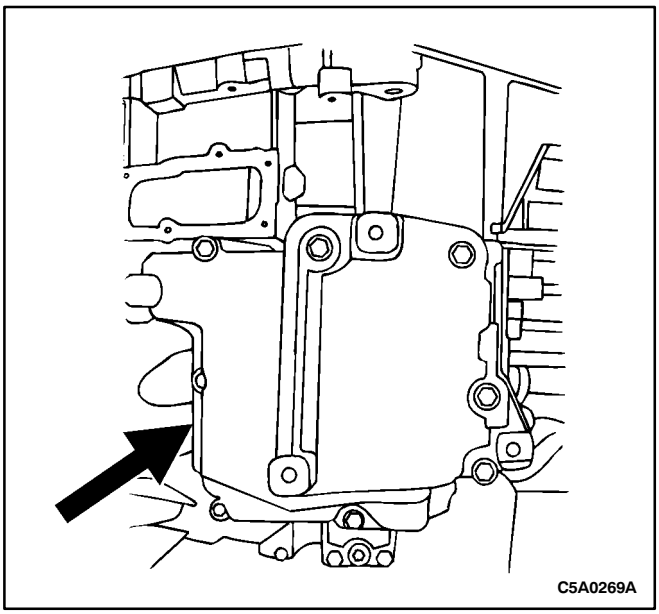

Caution: Be careful not to damage the contact surfaces of the transaxle housing.

9. Remove the valve body cover.

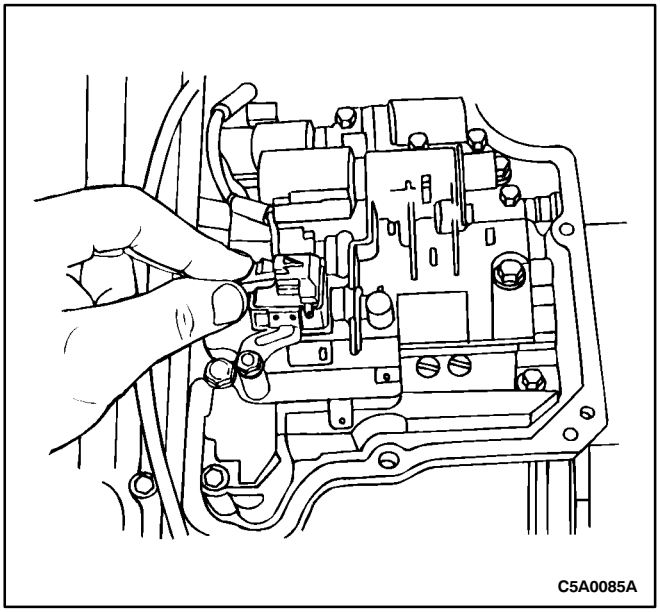

10. Disconnect the solenoid electrical connectors.

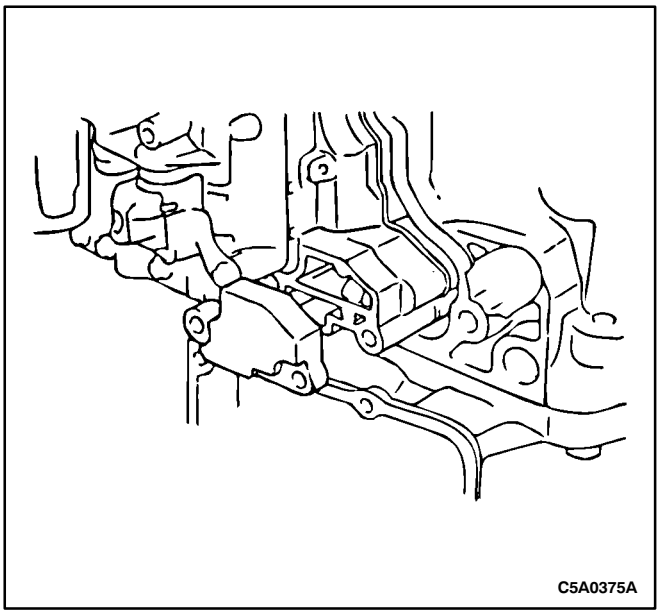

Notice: Discard the gasket.

11. Remove the suction cover and gasket.

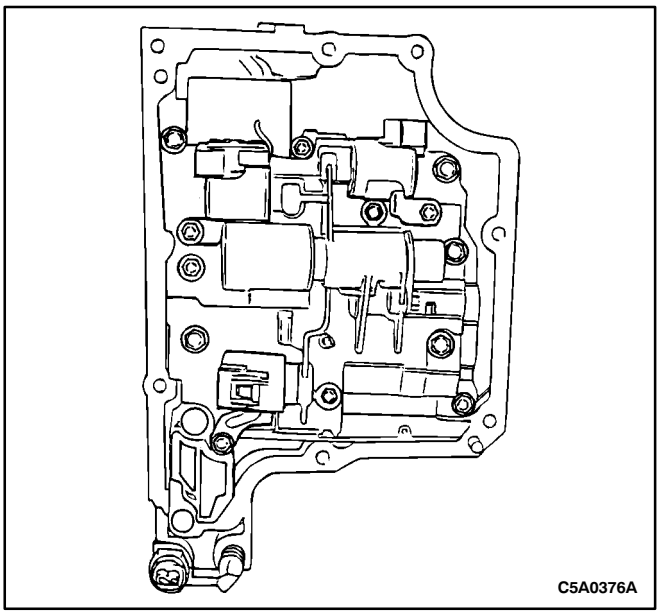

Notice: Disconnect the manual valve connecting rod from the manual valve lever.

12. Remove the seven bolts and the valve body.

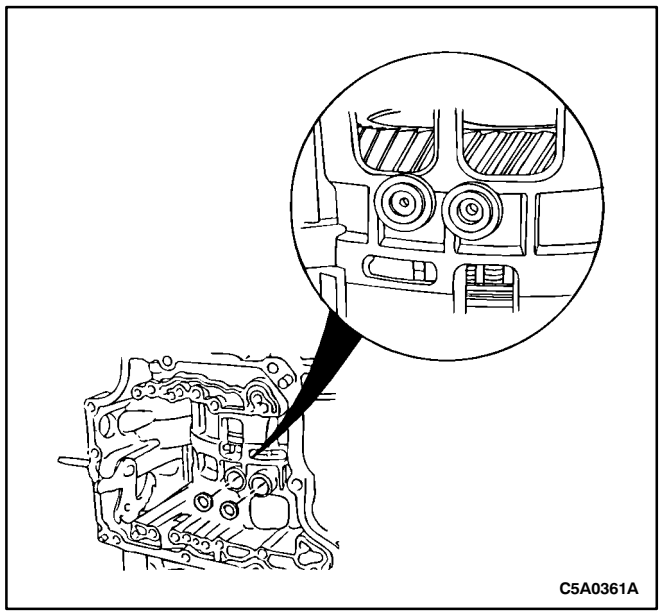

Notice: Discard the apply seals.

13. Remove the two apply seals.

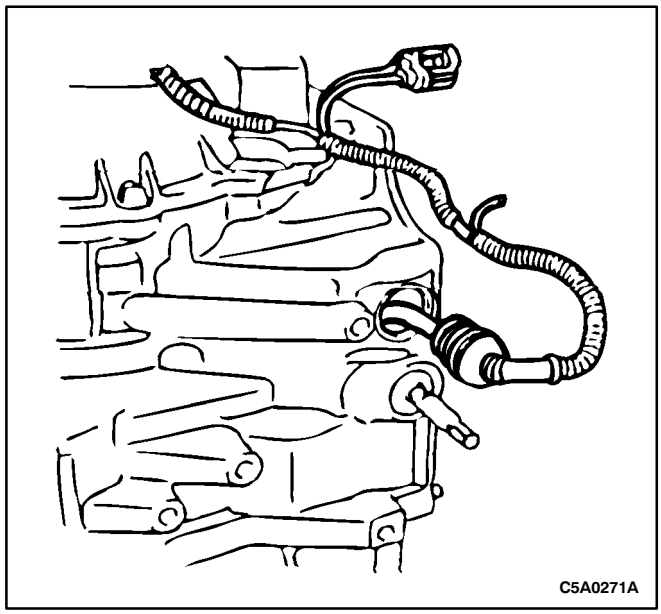

14. Remove the solenoid wire harness.

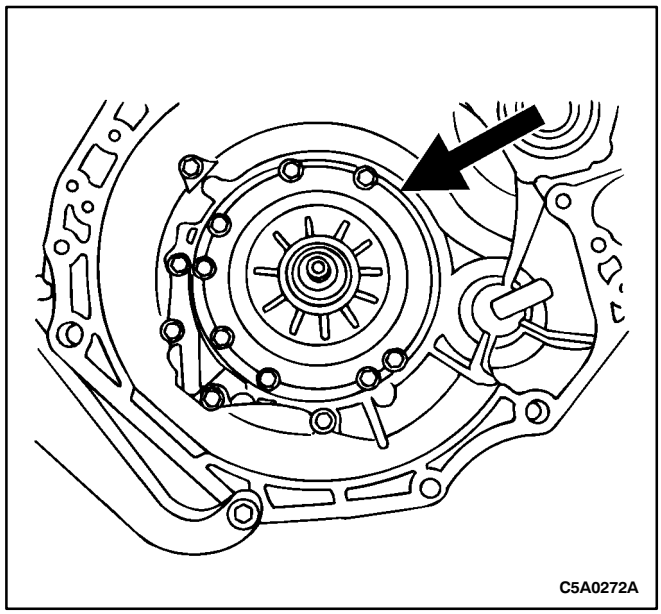

Caution: Be careful not to damage the stator shaft bushing.

Notice: Loosen the bolts evenly.

15. Remove the oil pump, second coast and second brake assembly.

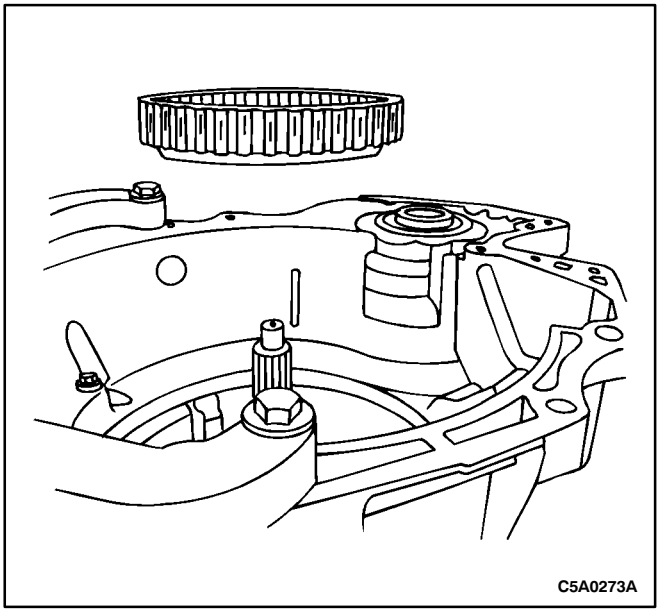

16. Remove the brake hub and one-way clutch.

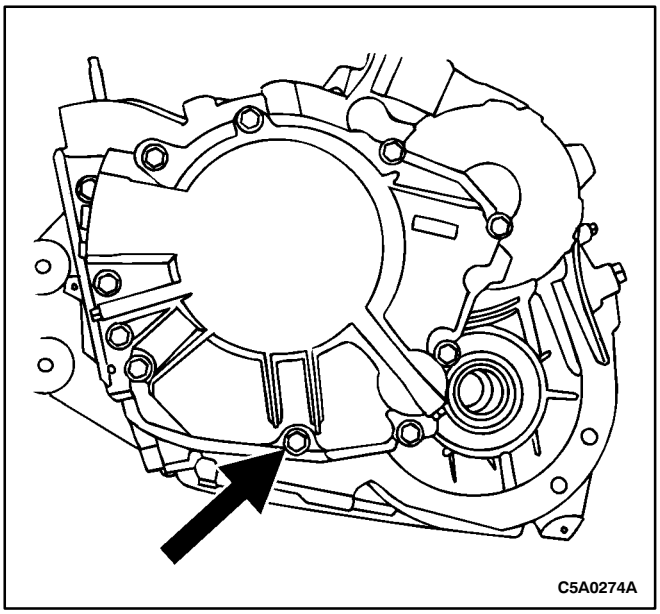

17. Remove the nine transaxle rear case bolts.

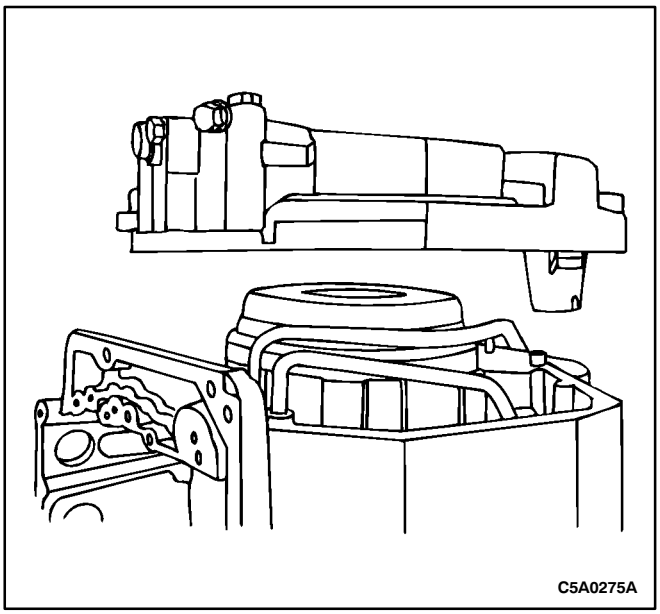

18. Remove the transaxle rear case.

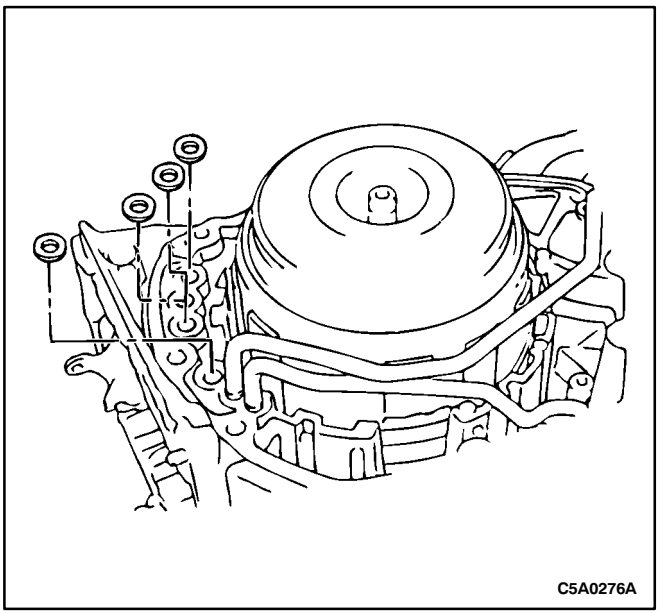

Notice: Discard the apply seals.

19. Remove the four apply seals.

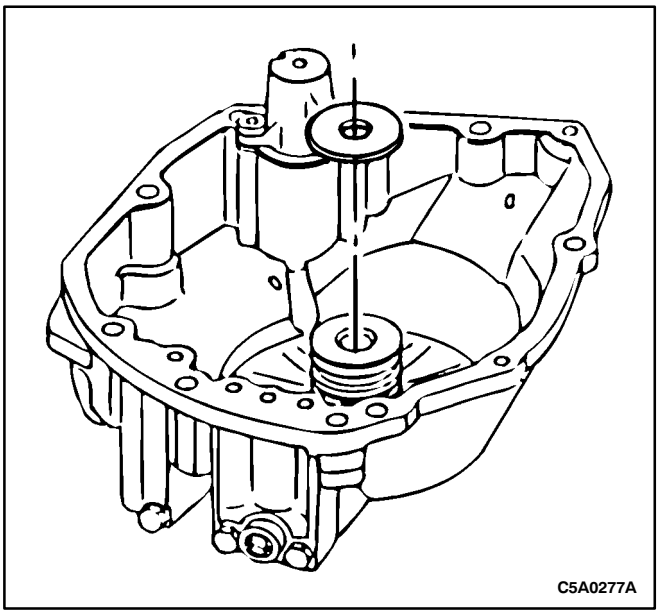

20. Remove the thrust washer from the transaxle rear case.

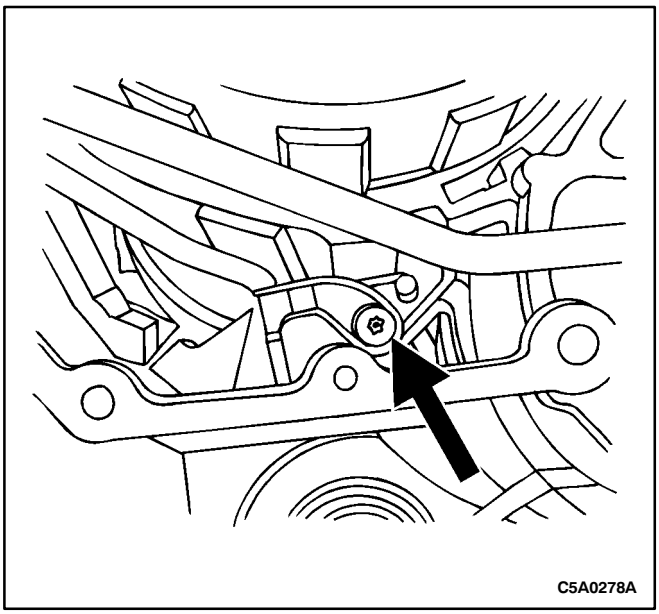

21. Remove the tube clamp bolt and the clamp.

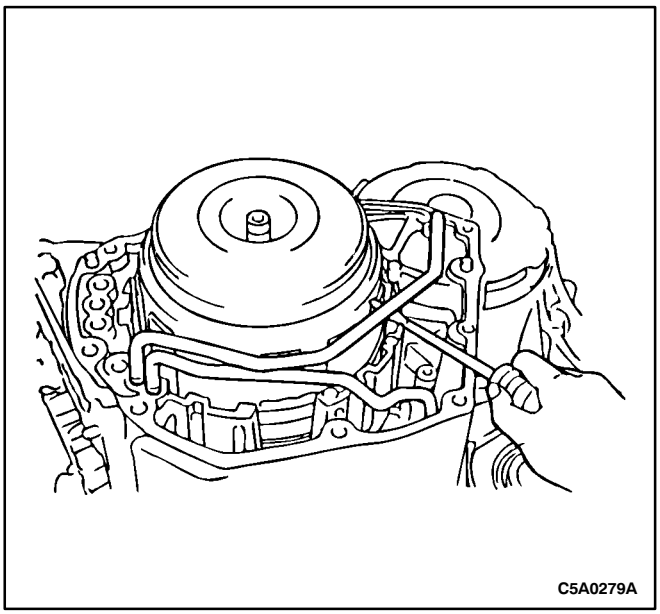

Caution: Be careful not to damage the tubes.

22. Remove the apply tubes.
    - Pry up both ends of the tube with a large screwdriver.

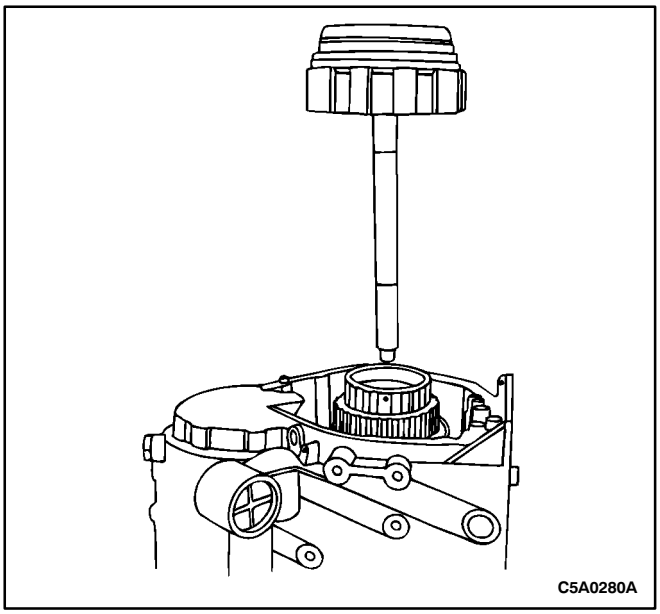

23. Remove the forward/direct clutch assembly.

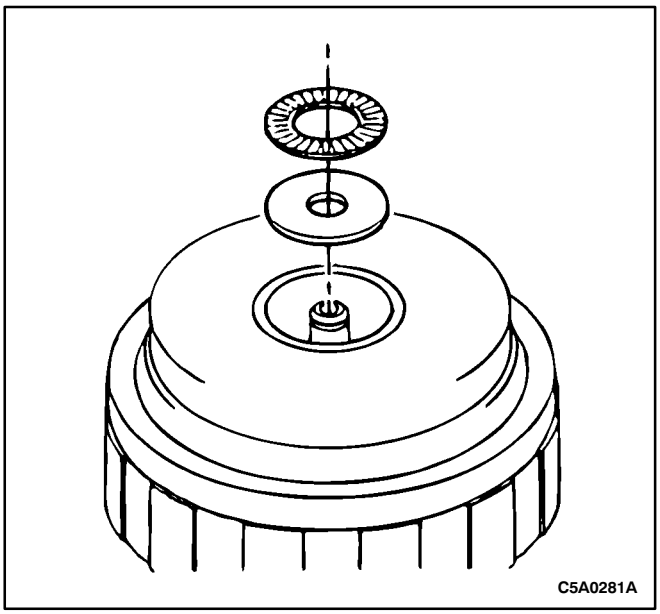

24. Remove the forward/direct clutch thrust washer and bearing.

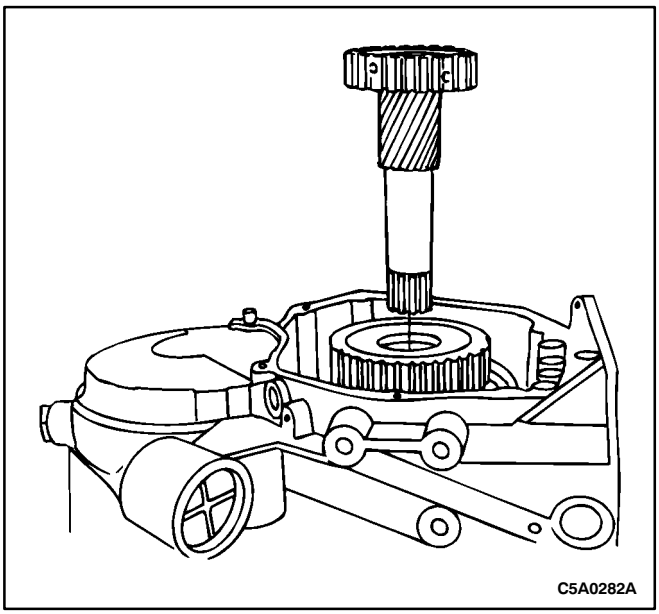

25. Remove the planetary sun gear.

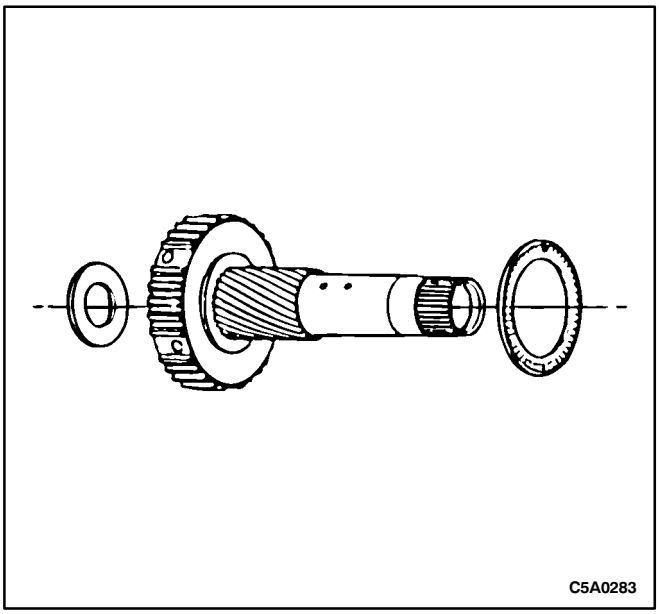

26. Remove the planetary sun gear thrust washer and bearing.

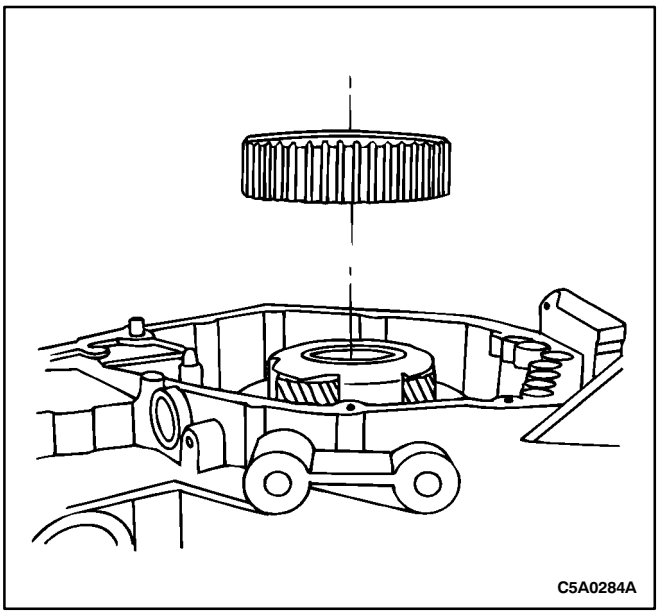

27. Remove the rear planetary ring gear.

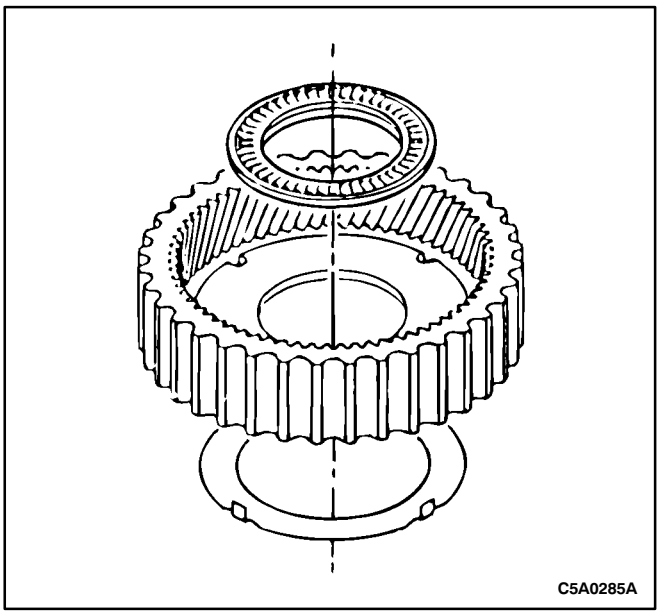

28. Remove the rear planetary ring gear thrust washer and bearing.

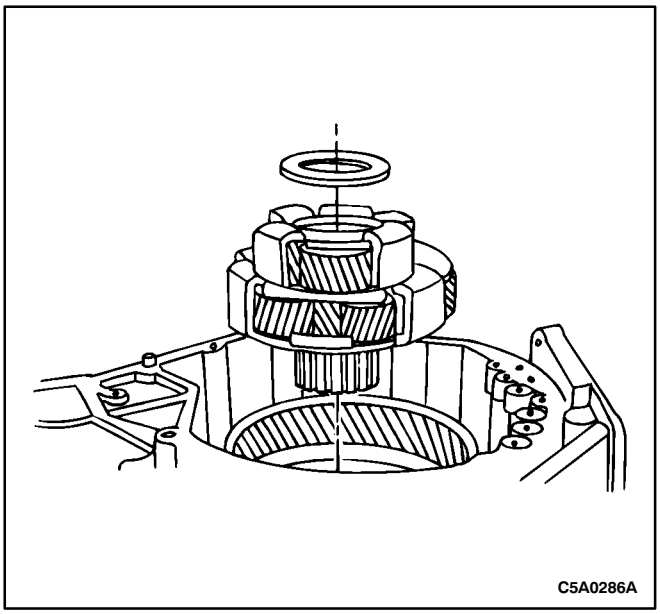

29. Remove the planetary gear and thrust washer.

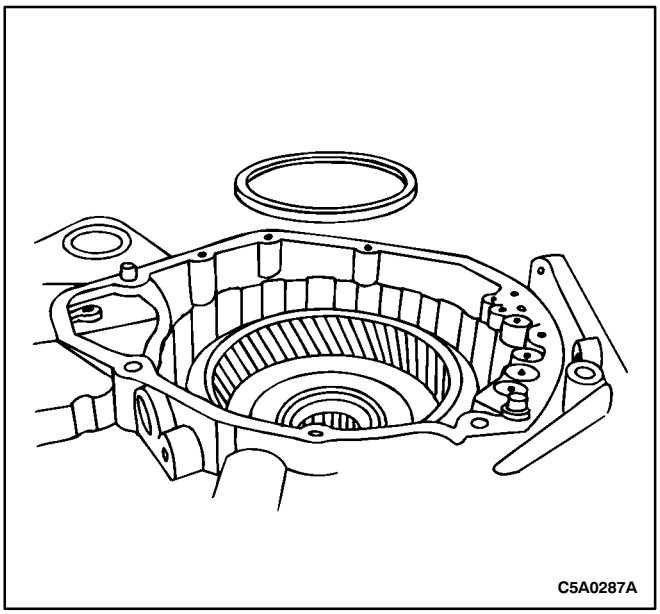

30. Remove the bearing.

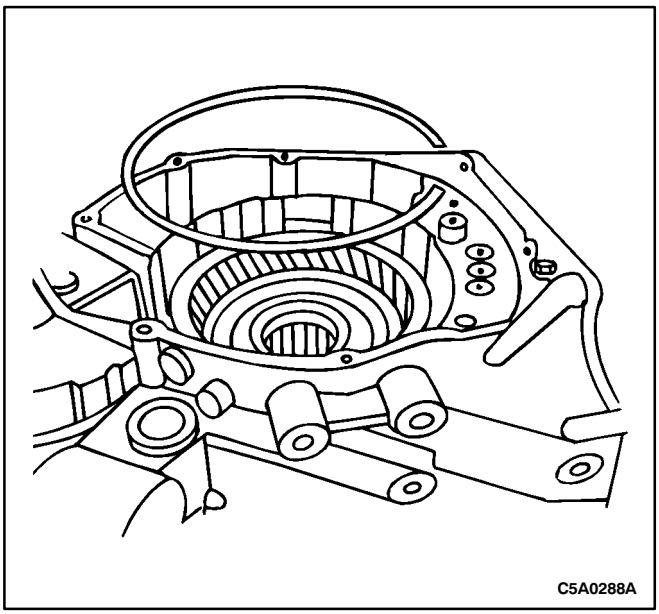

WARNING: USE CAUTION WHEN REMOVING SNAP RINGS OR PERSONAL INJURY MAY RESULT.

31. Remove the snap ring retaining the low/reverse brake clutch piston assembly, front planetary ring gear and one-way clutch.

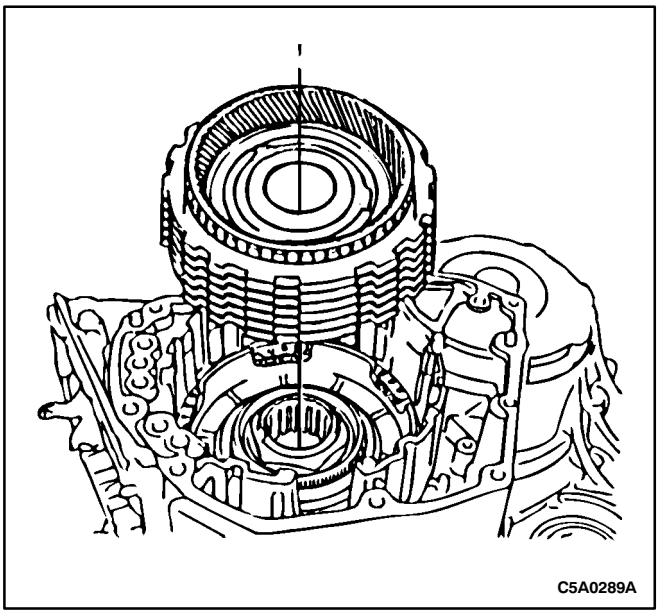

32. Remove the low/reverse brake clutch piston assembly, front planetary ring gear and one-way clutch.

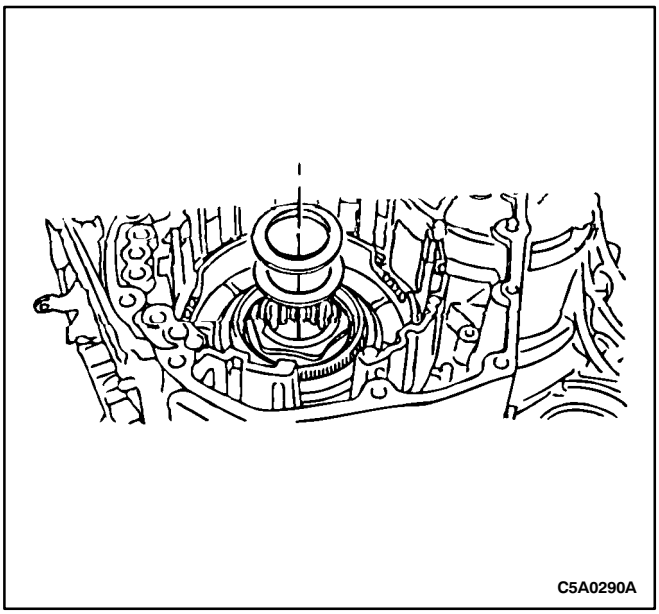

33. Remove the thrust washer and bearing.

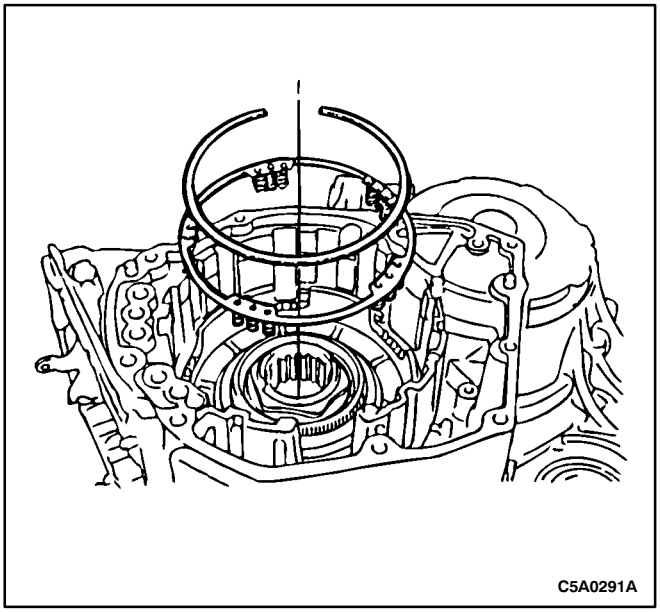

WARNING: USE CAUTION WHEN REMOVING SNAP RINGS OR PERSONAL INJURY MAY RESULT.

34. Remove the snap ring and the low/reverse return spring.

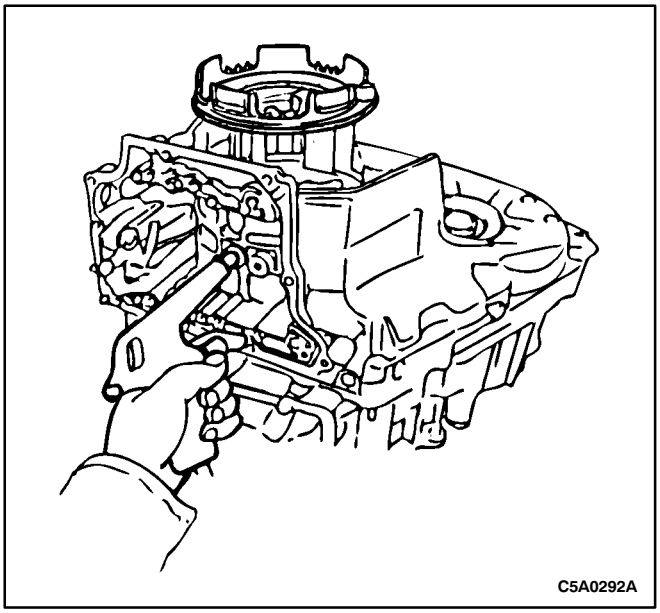

WARNING: USE CAUTION WHEN REMOVING COMPONENTS WITH COMPRESSED AIR OR PERSONAL INJURY MAY RESULT.

Notice: If the piston does not come out completely, use needlenose pliers to remove.

35. Apply 396 kPa (57 psi) of compressed air into the oil passage to remove the low/reverse brake piston.

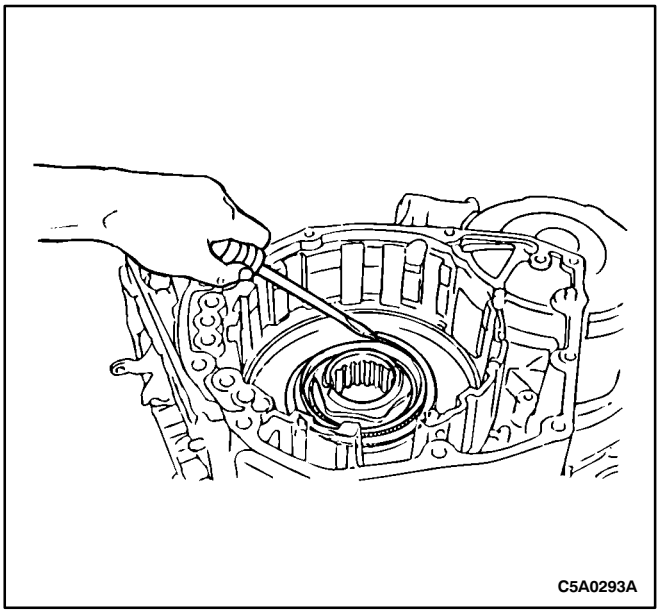

WARNING: USE CAUTION WHEN REMOVING SNAP RINGS OR PERSONAL INJURY MAY RESULT.

Notice: Rotate the transaxle on its side before removing.

36. Remove the counter drive gear snap ring.

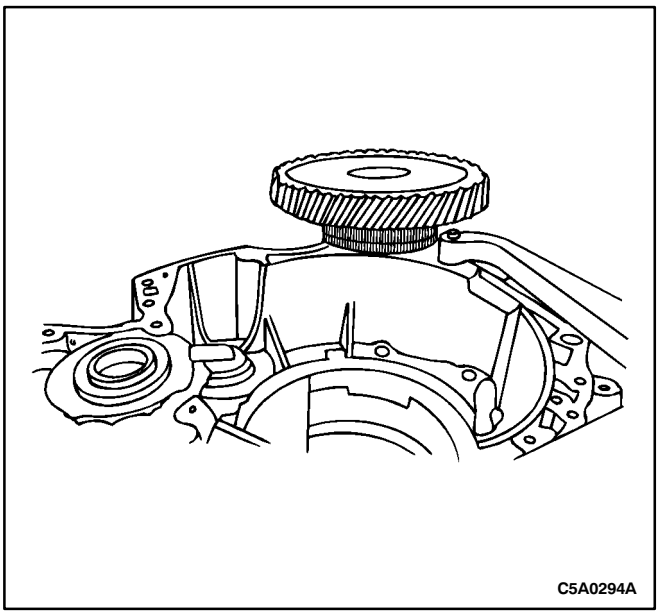

37. Remove the counter drive gear.

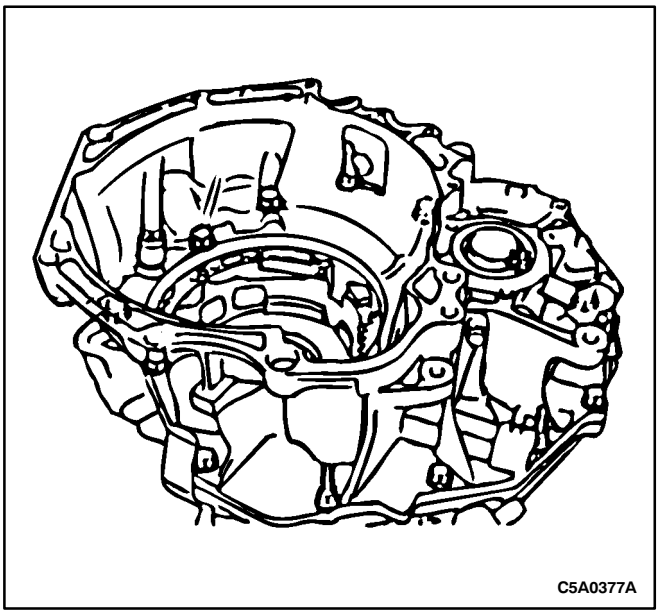

38. Remove the 15 bolts and separate the transaxle housing from the transaxle case.

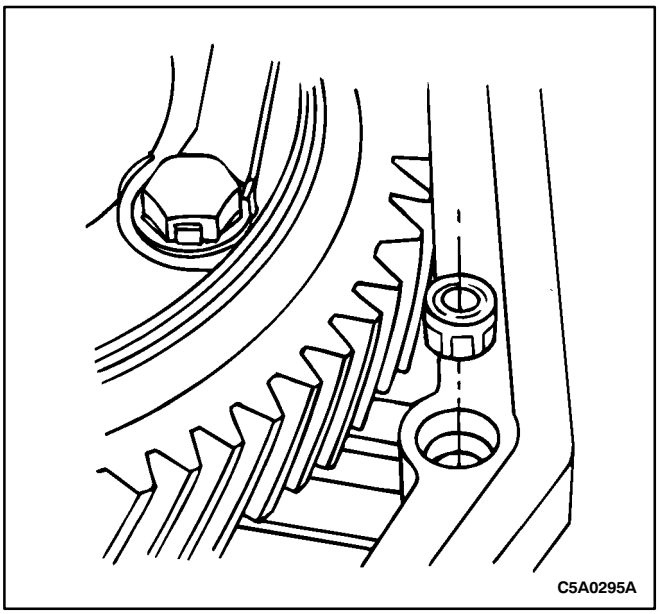

39. Remove and discard the apply seal.

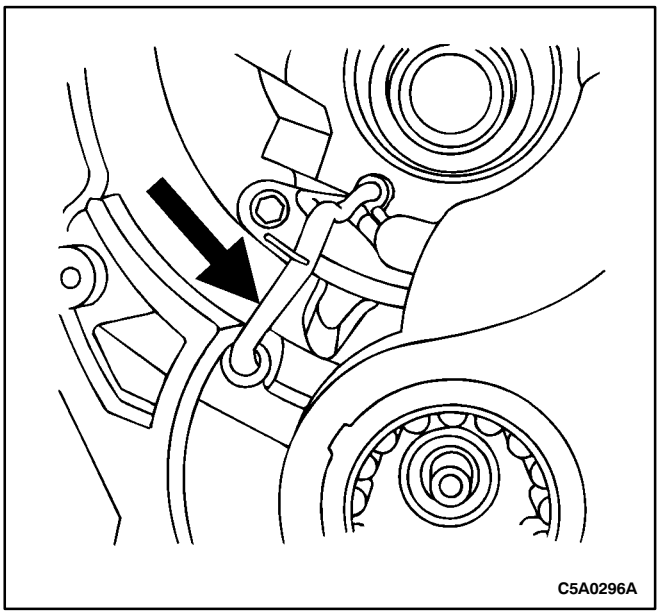

Caution: Be careful not to damage the tube.

40. Remove the differential bearing lubrication apply tube.
    - Pry up both ends of the tube with a large screwdriver.

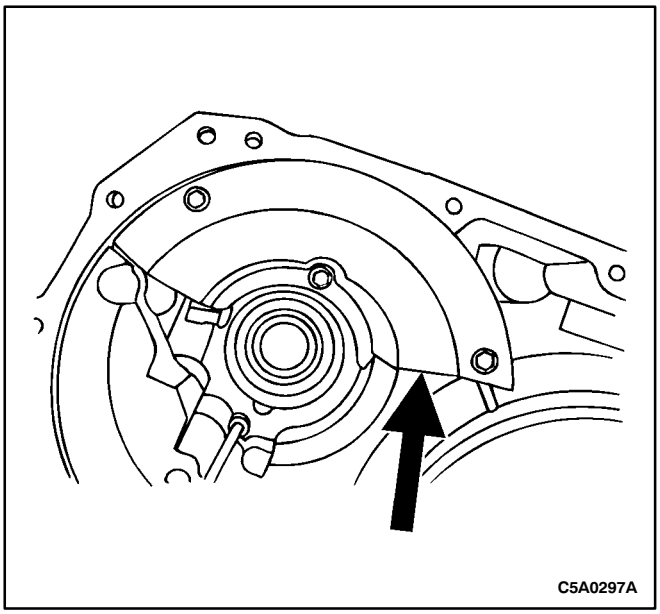

41. Remove the three bolts and the oil reserver plate.

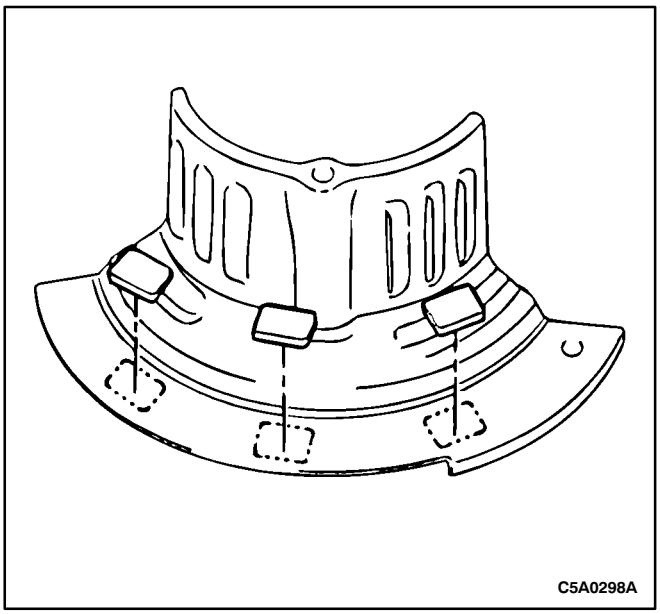

42. Remove the magnets from the oil reserver plate.

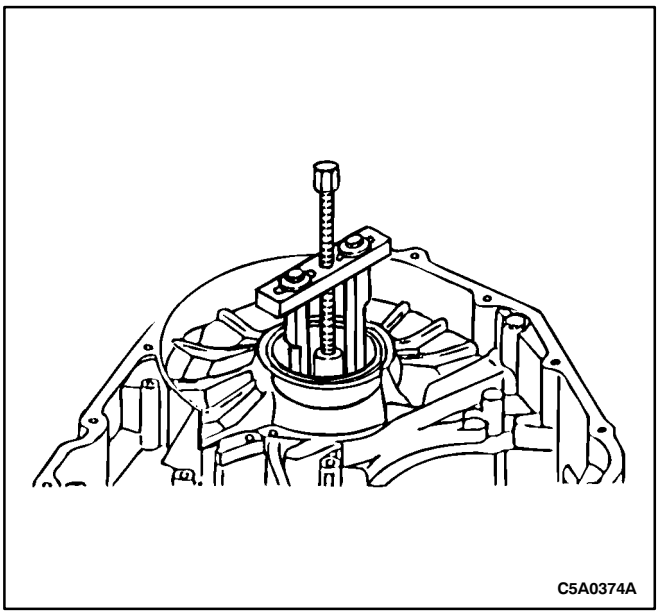

43. Using bearing puller KM–210-A and bearing puller adapter KM-709, remove the differential bearing from the transaxle housing.

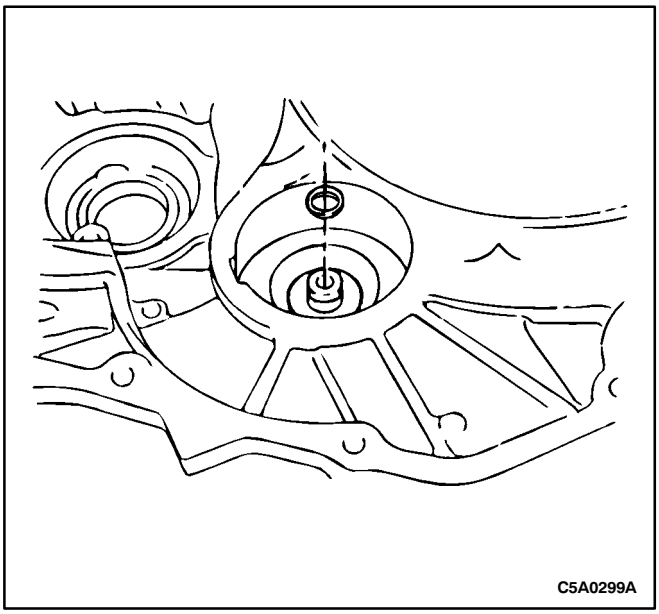

44. Remove the oil seal ring.

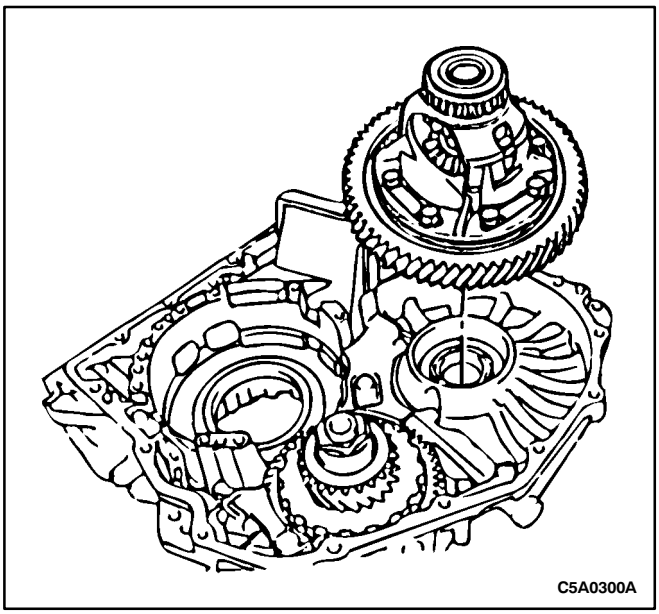

45. Remove the differential case.

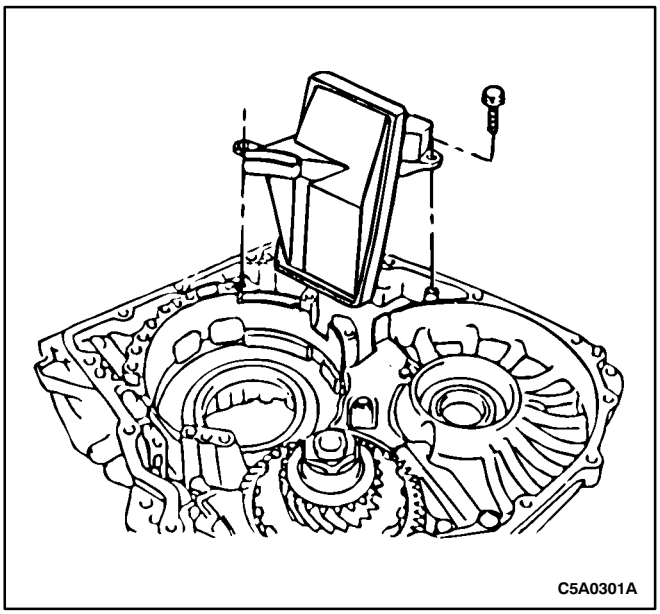

46. Remove the transaxle oil filter.

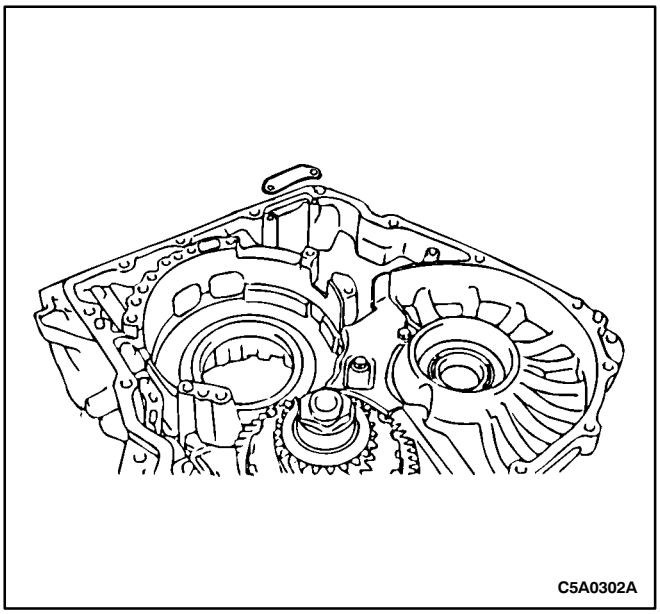

47. Remove the transaxle case plate.

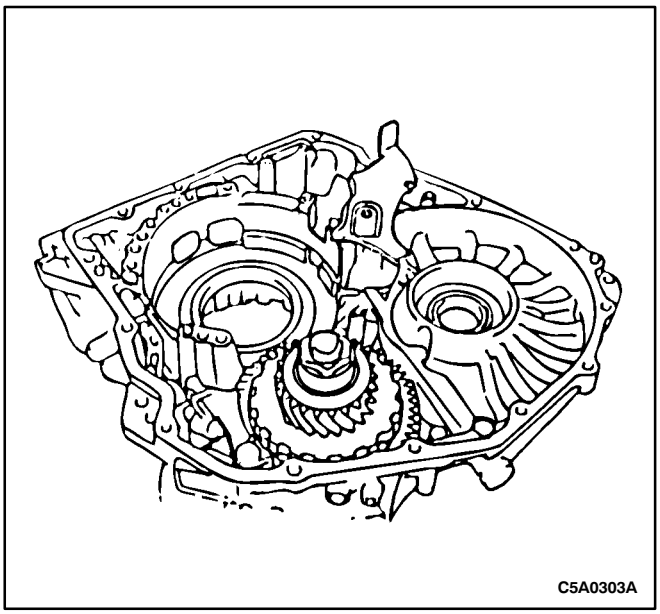

48. Remove the two bolts and the oil reserver plate.

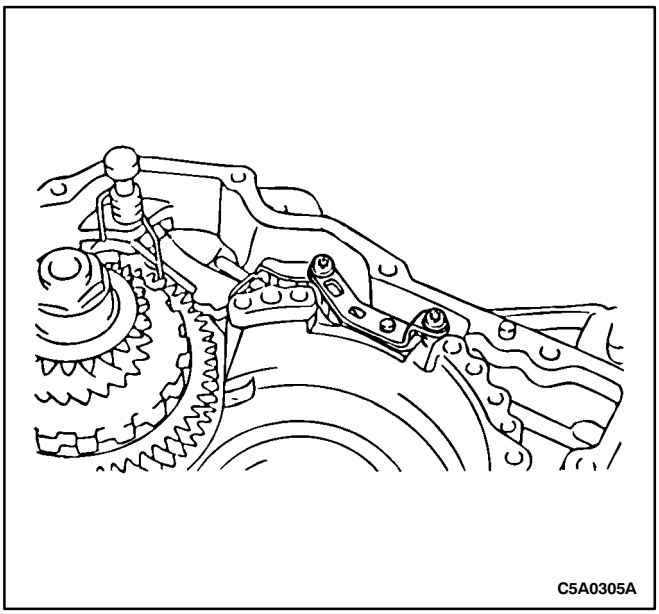

49. Remove the two cam plate bolts.

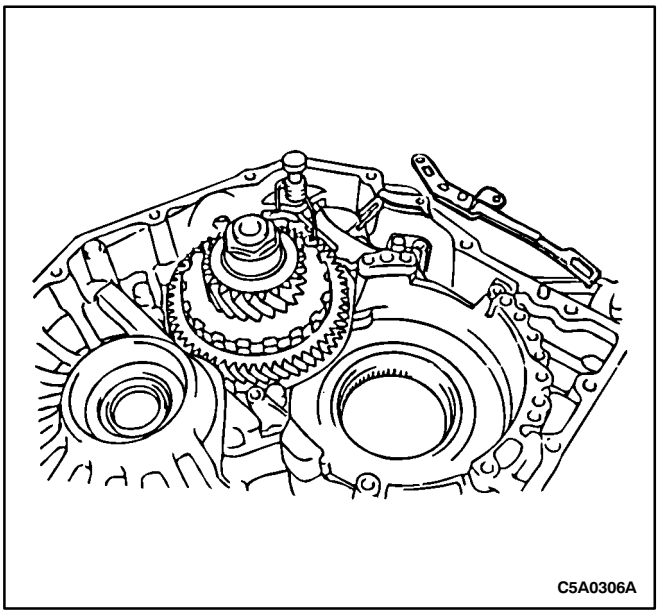

50. Remove the cam plate.

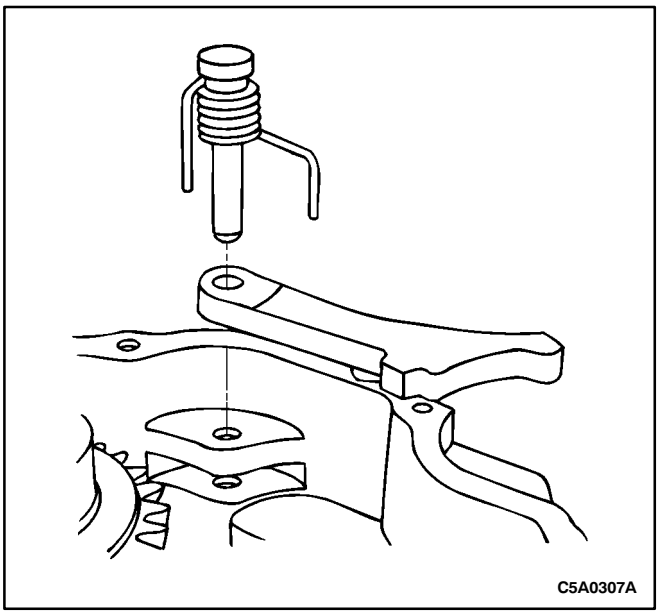

51. Remove the parking lock pawl shaft, torsion spring and the parking lock pawl.

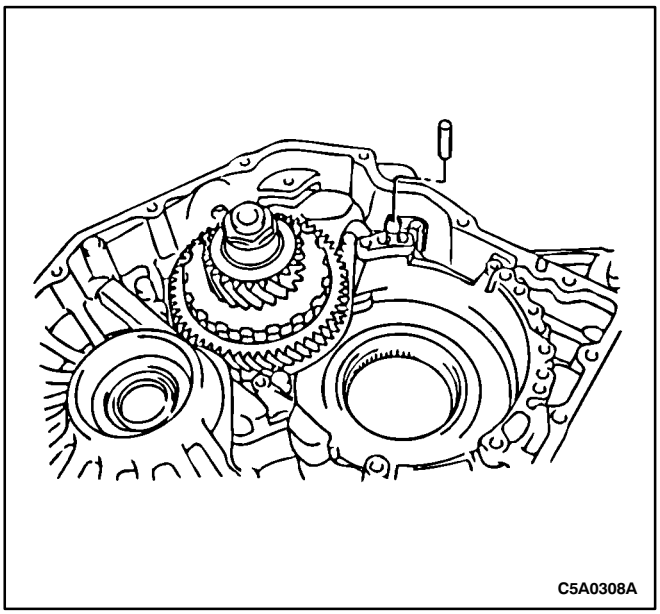

52. Remove the parking lock pin

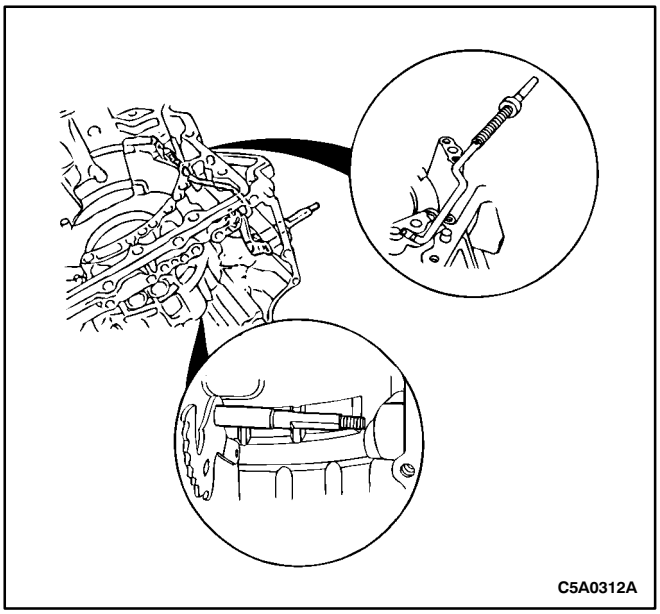

53. Disconnect the parking lock rod from the manual detent lever and remove them.

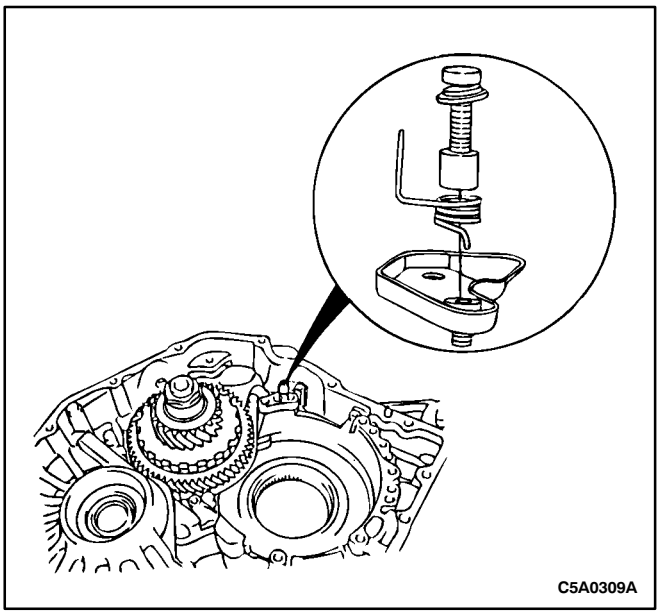

54. Remove the two bolts, the torsion spring, the spacer and the accumulator bracket.

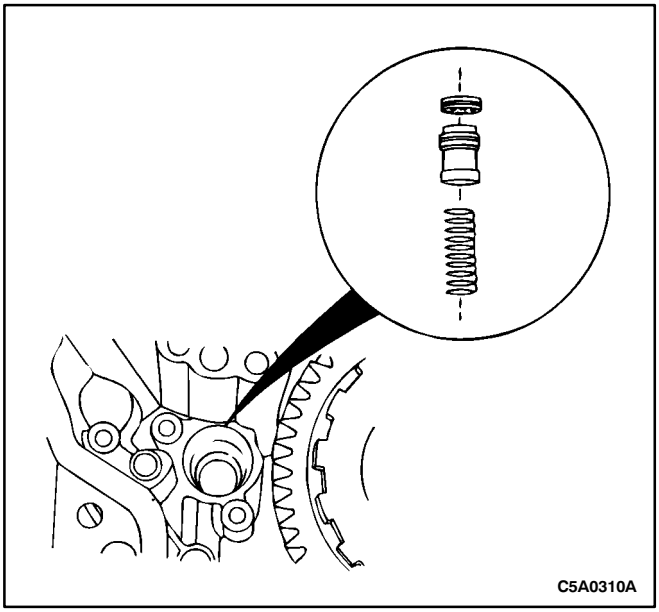

55. Remove the underdrive brake accumulator cover, piston and spring.

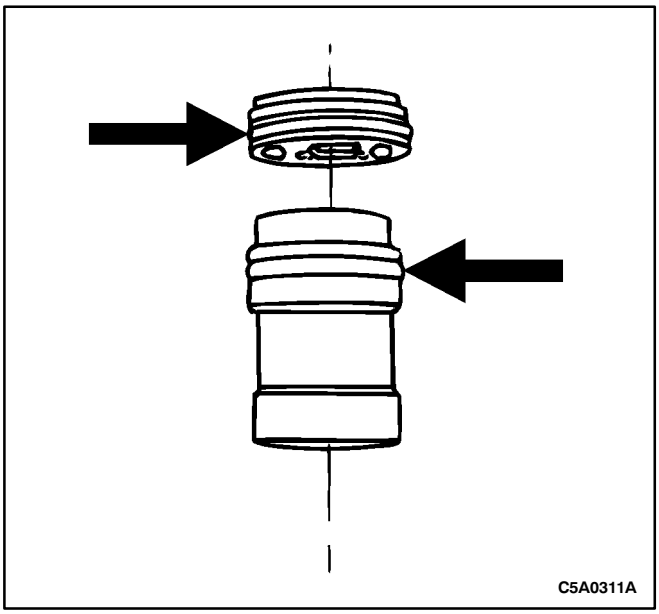

56. Remove and discard the O-rings from the accumulator cover and piston.

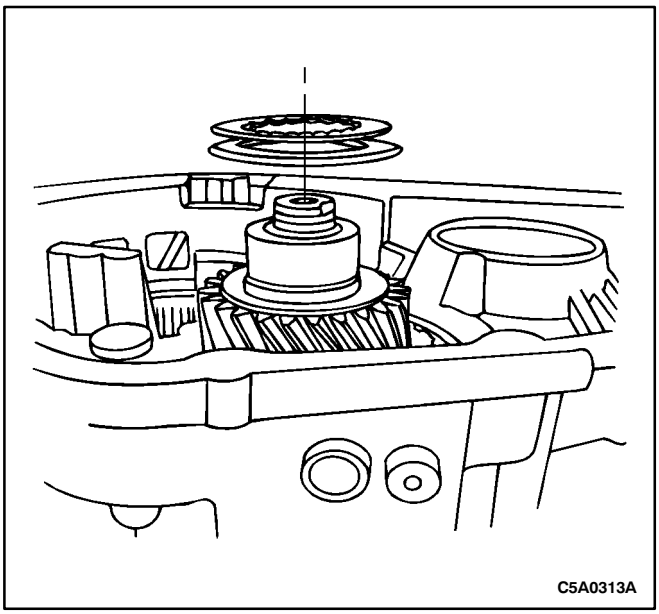

57. Remove the underdrive planetary gear thrust washer and bearing.

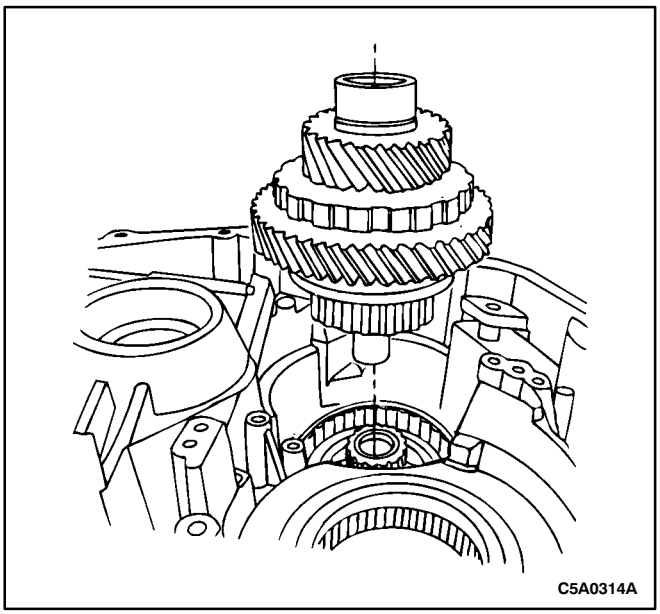

58. Remove the underdrive planetary gear.

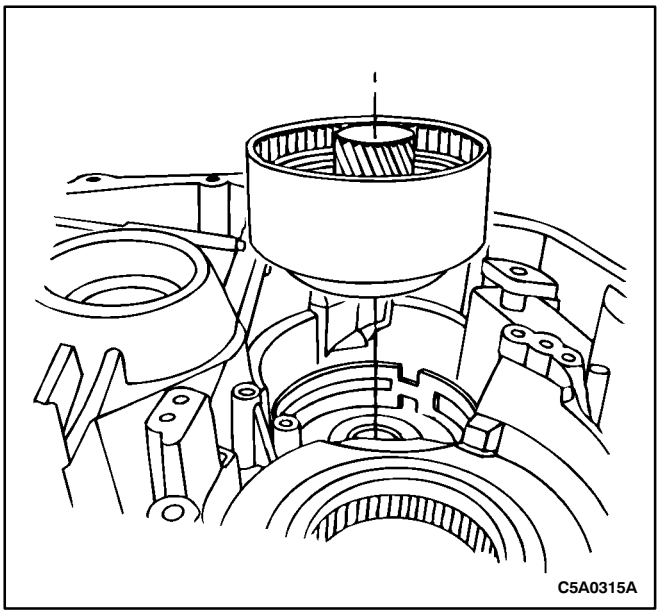

59. Remove the underdrive clutch.

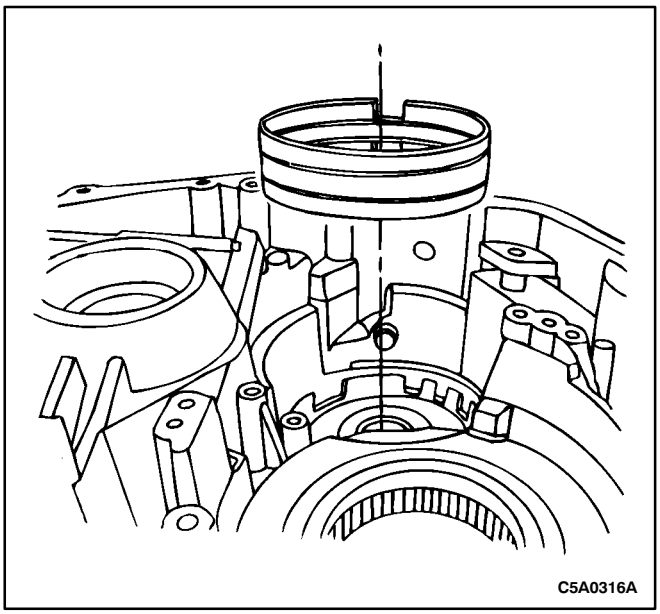

60. Remove the underdrive brake band.

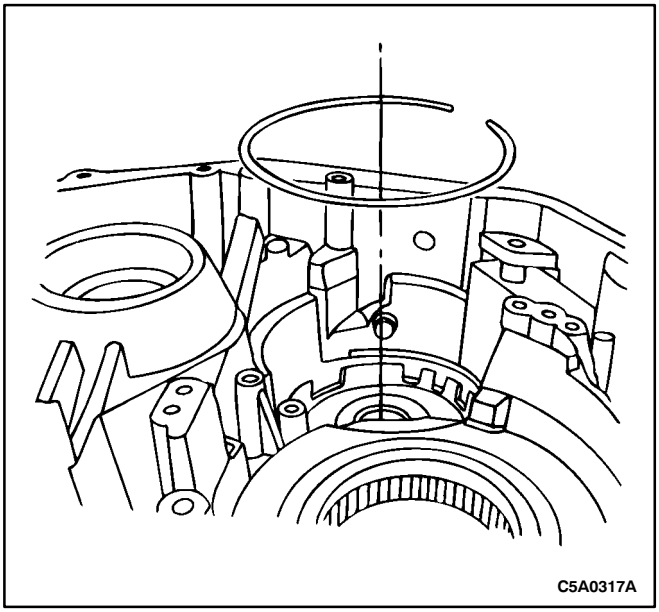

WARNING: USE CAUTION WHEN REMOVING SNAP RINGS OR PERSONAL INJURY MAY RESULT.

61. Remove the one-way clutch snap ring.

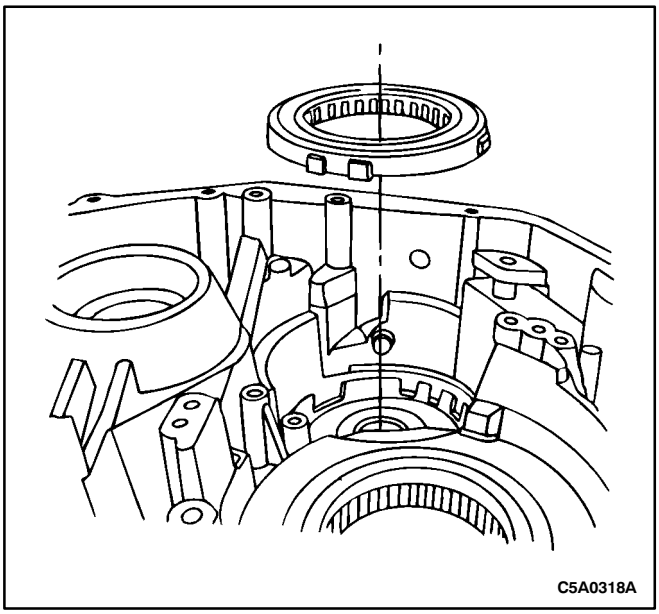

62. Remove the one-way clutch.

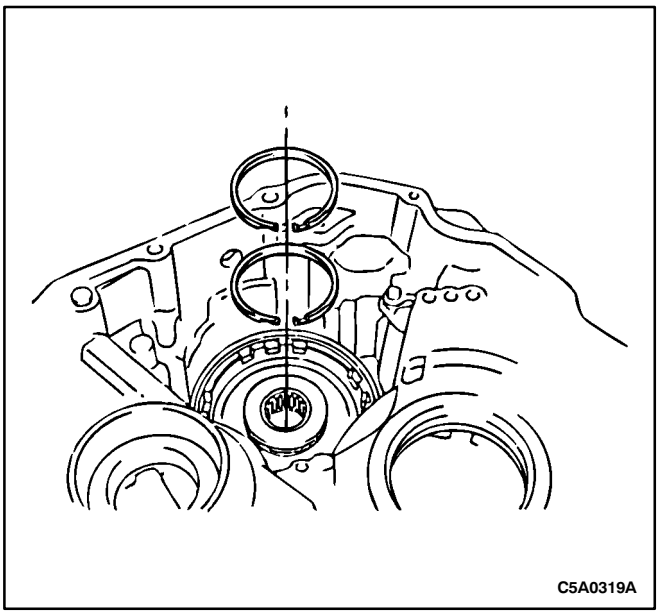

63. Remove the two seal rings.
    - Push one end of the seal ring into the groove and unhook both ends. Spread the rings apart and remove.

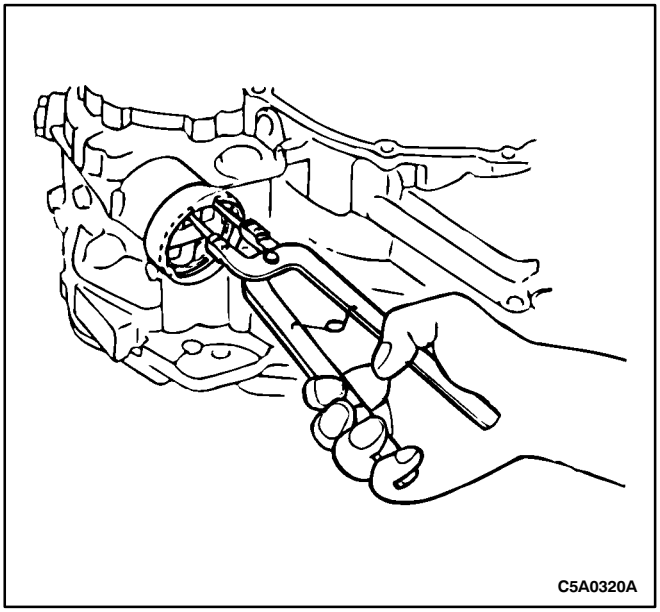

64. Remove the underdrive brake piston snap ring.

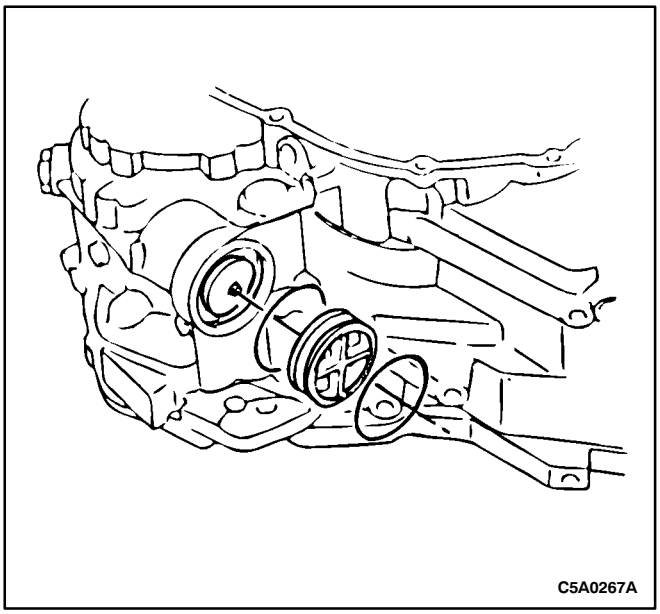

Notice: Remove and discard the cover O-rings.

65. Remove the underdrive brake piston cover.

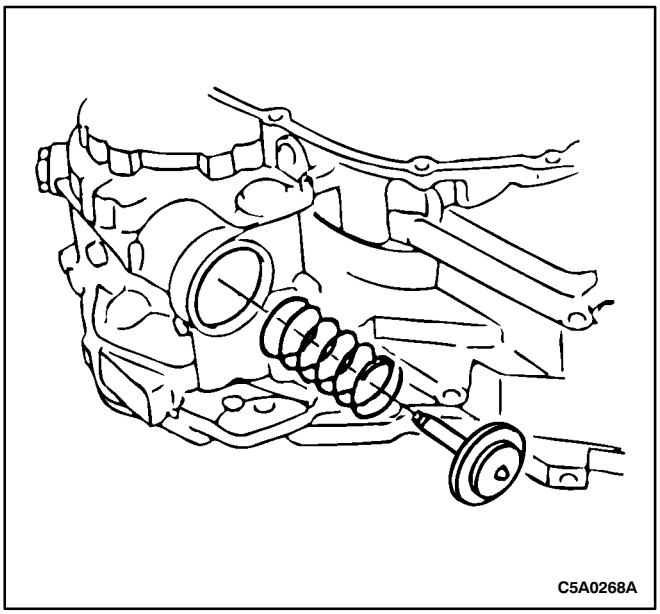

66. Remove the underdrive brake piston and spring.

OIL PUMP, SECOND COAST AND SECOND BRAKE ASSEMBLY

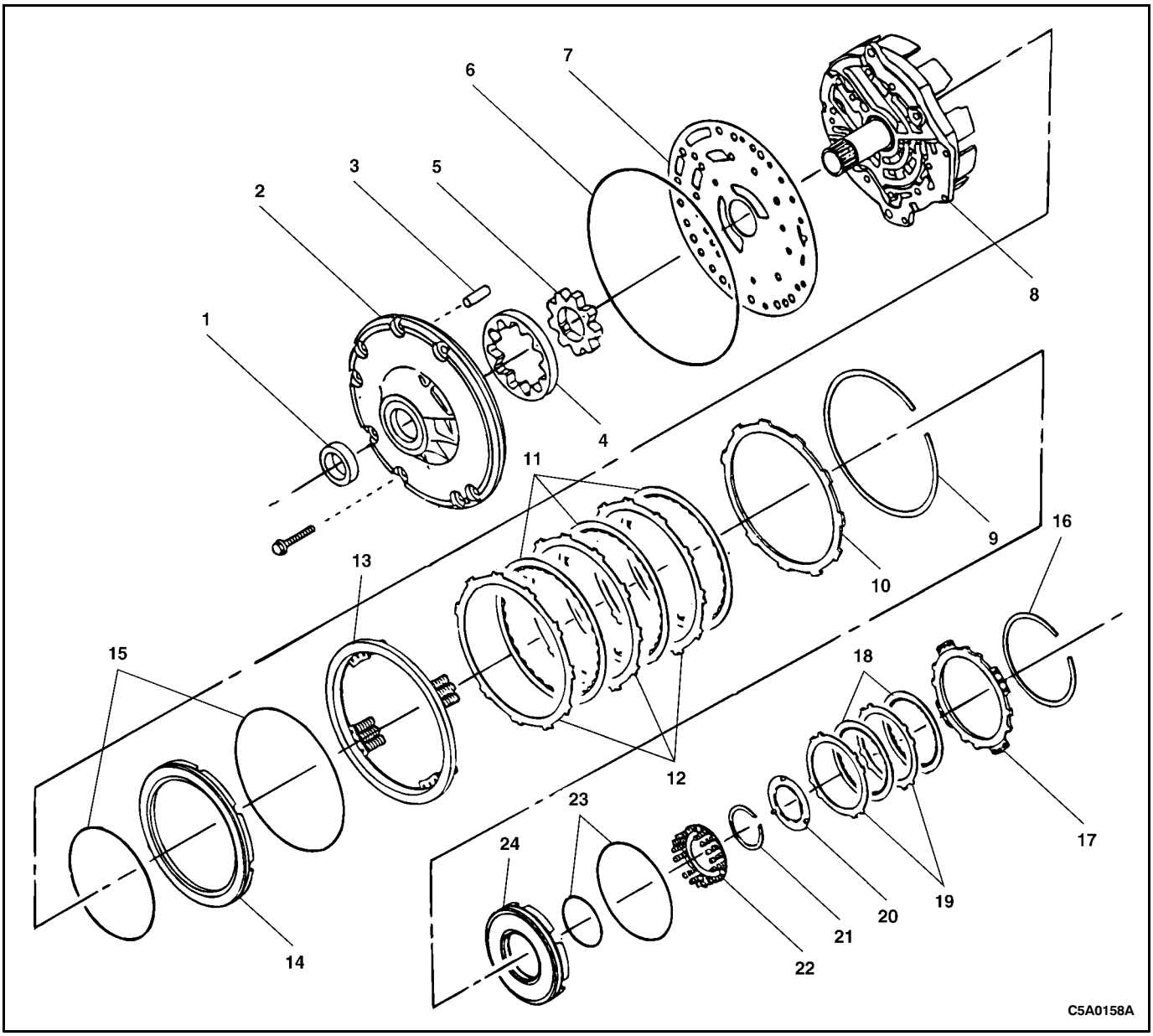

1. Oil Pump Seal
2. Oil Pump Body
3. Straight Pin
4. Pump Driven Gear
5. Pump Drive Gear
6. O-Ring
7. Oil Pump Plate
8. Stator Support
9. Snap Ring
10. Second Brake Pressure Plate
11. Second Brake Friction Plate
12. Second Brake Steel Plate
13. Second Brake Piston Return Spring
14. Second Brake Piston
15. O-Ring
16. Snap Ring
17. Coast Clutch Pressure Plate
18. Coast Clutch Friction Plate
19. Coast Clutch Steel Plate
20. Thrust Washer
21. Shaft Snap Ring
22. Second Coast Piston Return Spring
23. O-Ring
24. Second Coast Piston

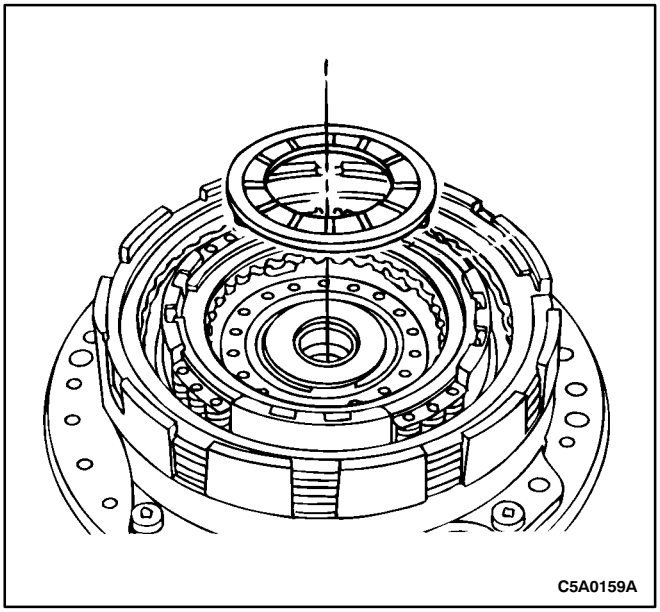

Tools Required

KM-698 Spring Compressor

KM-674 Oil Seal Installer

Disassembly Procedure

1. Remove the thrust washer.

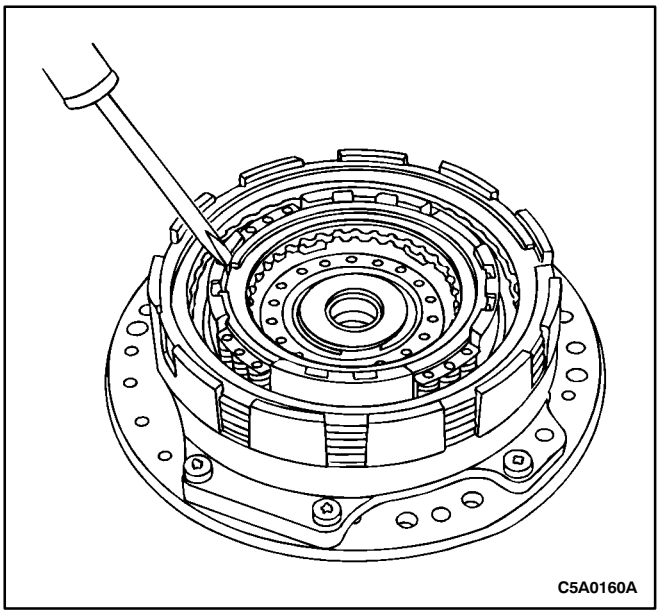

WARNING: USE CAUTION WHEN REMOVING SNAP RINGS OR PERSONAL INJURY MAY RESULT.

2. Carefully remove the snap ring.

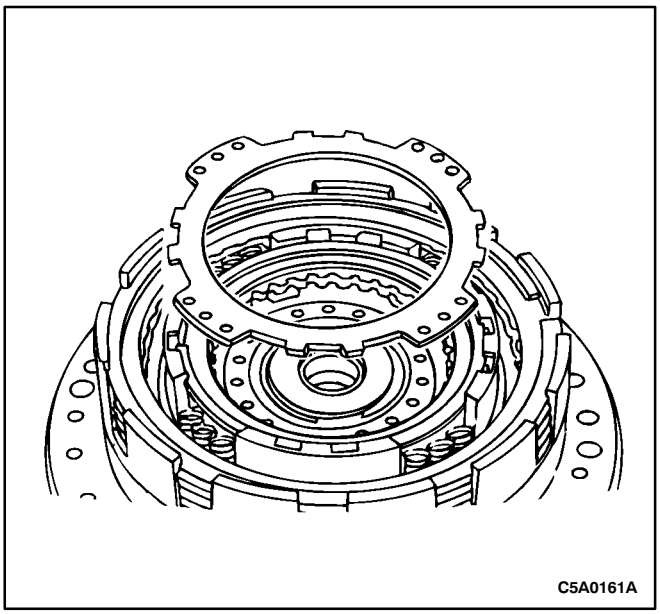

3. Remove the coast clutch pressure plate.

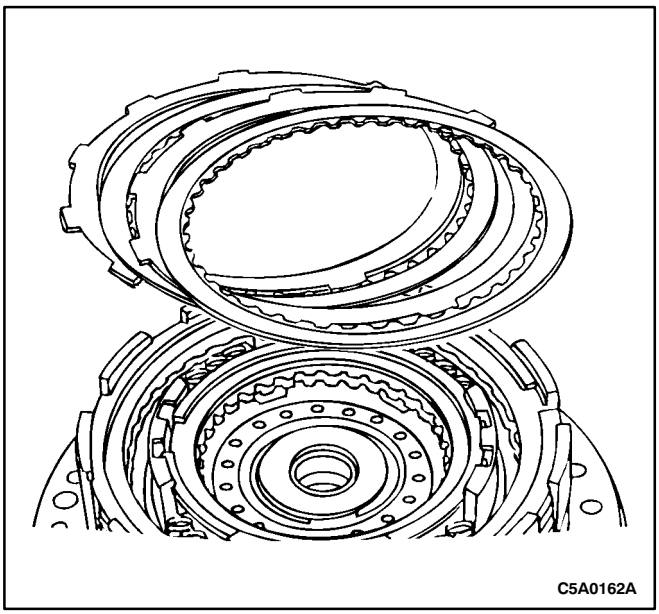

4. Remove the coast clutch disc pack.

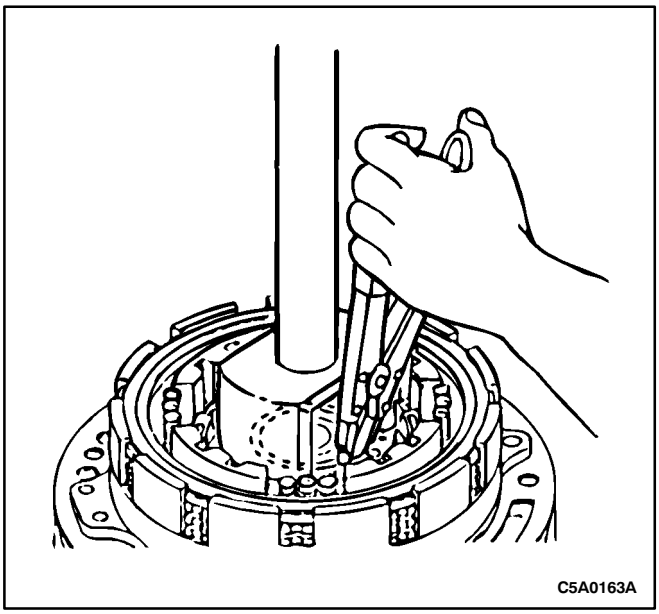

5. Position spring compressor KM-698 on the clutch piston return spring. Using a press, compress the spring, then remove the snap ring from the groove.

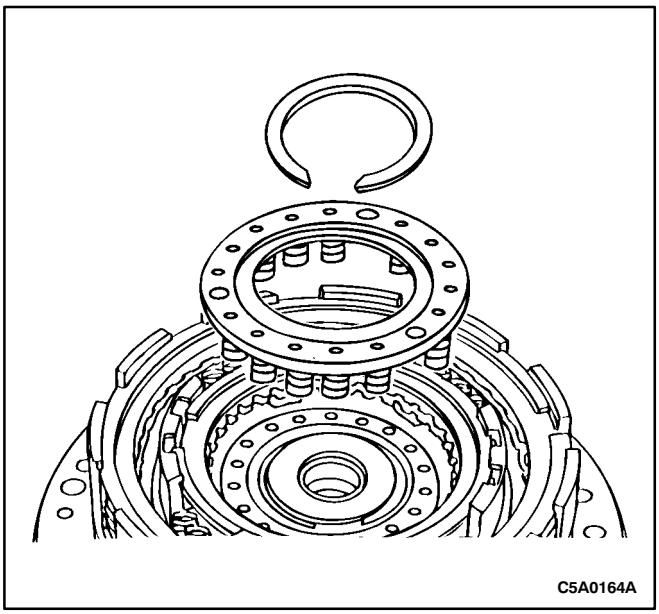

6. Remove the snap ring and the clutch piston return spring.

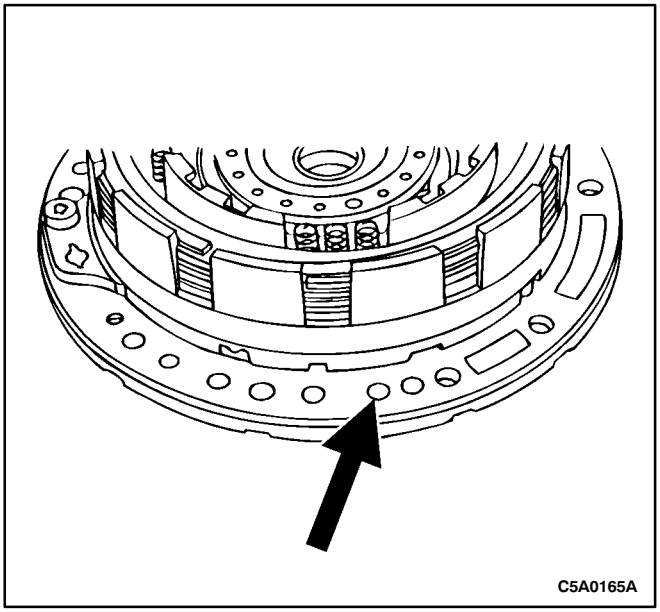

WARNING: USE CAUTION WHEN REMOVING COMPONENTS WITH COMPRESSED AIR OR PERSONAL INJURY MAY RESULT.

Notice: If the piston does not come out completely, use needlenose pliers to remove.

7. Apply 396 kPa (57 psi) of compressed air into the oil passage shown to remove the second coast piston.

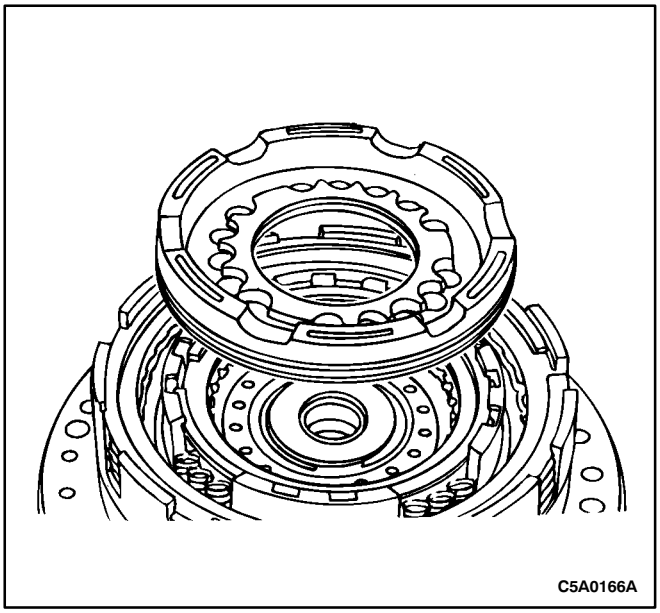

8. Remove the second coast piston.

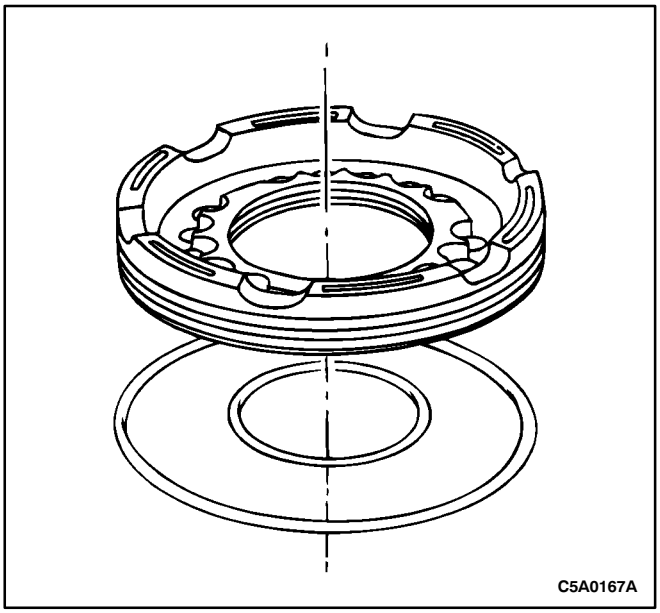

9. Remove and discard the second coast piston O-rings.

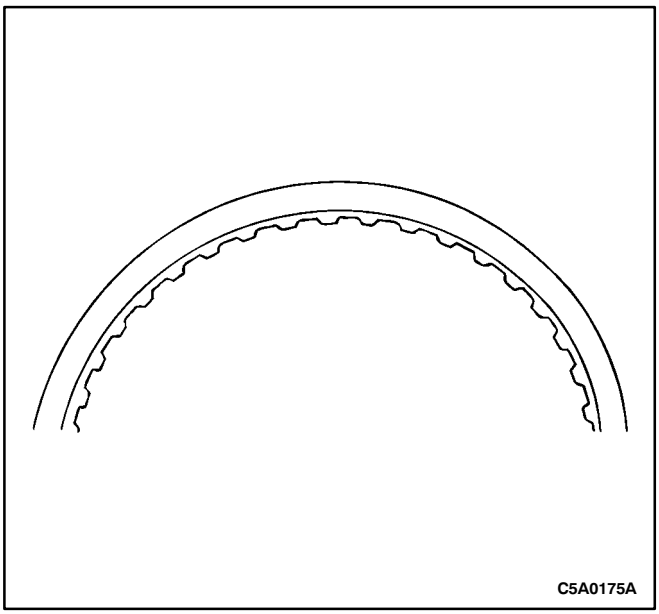

Notice: Check the steel and friction plates for wear or damage. Replace if necessary.

Notice: New clutch plates should be soaked in TOTAL FLUID HX for two hours before being assembled.

10. Inspect the coast clutch steel and friction plates.

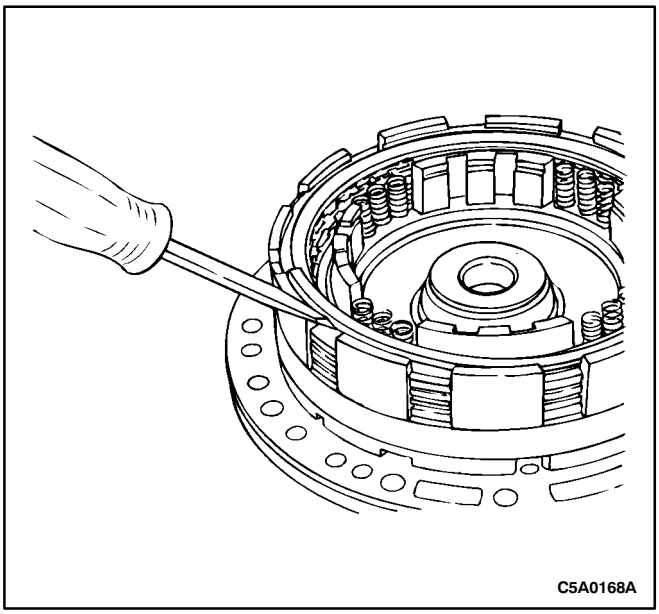

WARNING: USE CAUTION WHEN REMOVING SNAP RINGS OR PERSONAL INJURY MAY RESULT.

11. Carefully remove the snap ring.

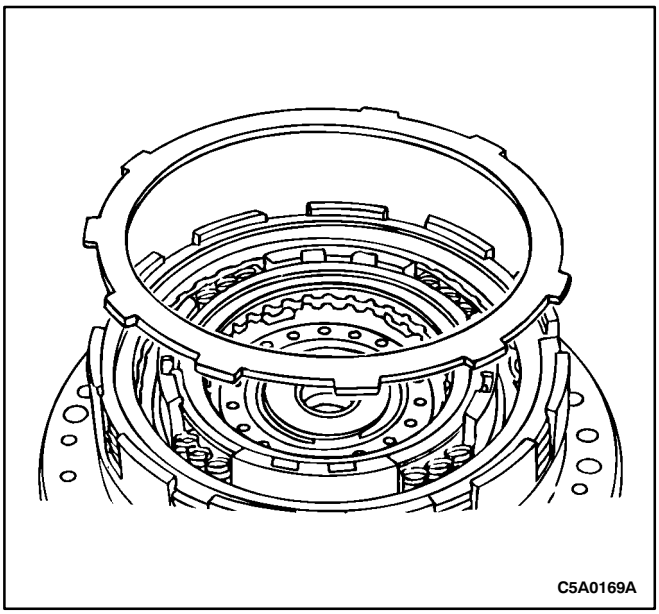

12. Remove the second brake upper flange.

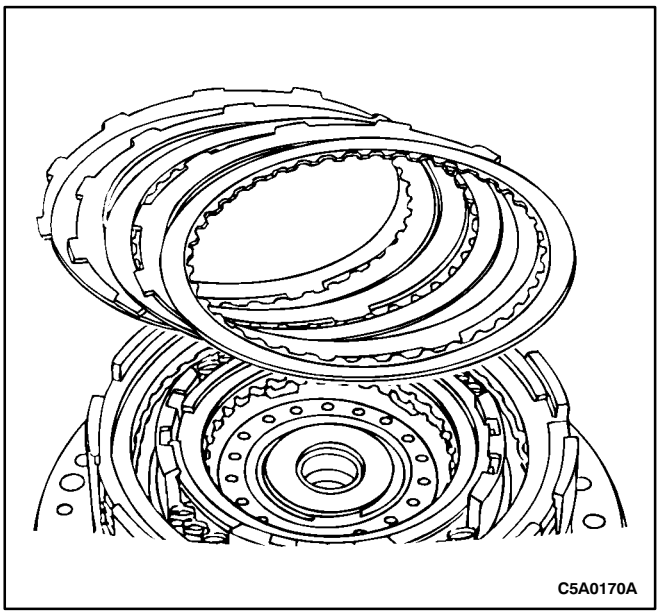

13. Remove the second brake clutch pack.

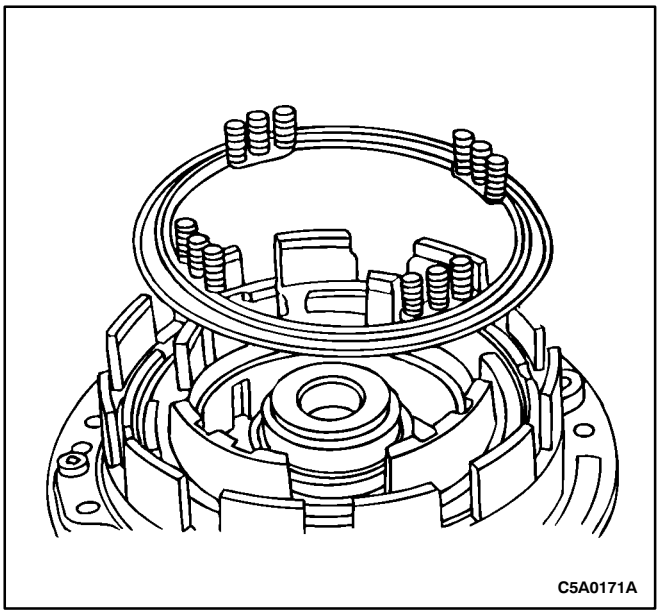

14. Remove second brake piston return spring.

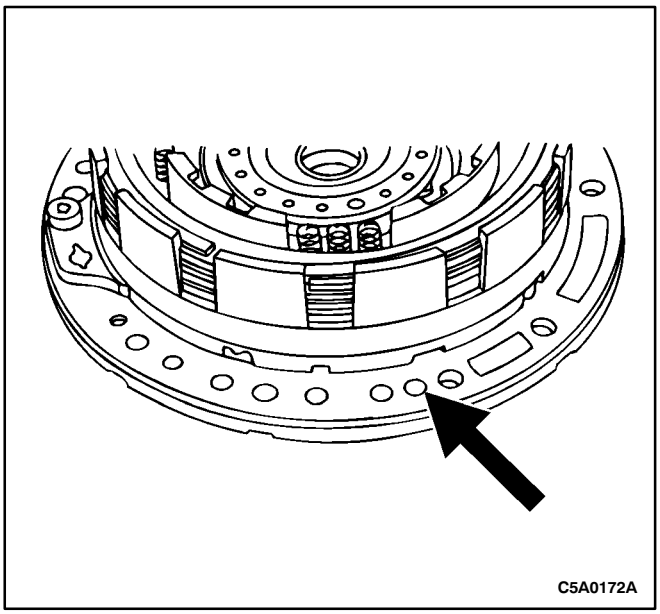

WARNING: USE CAUTION WHEN REMOVING COMPONENTS WITH COMPRESSED AIR OR PERSONAL INJURY MAY RESULT.

Notice: If the piston does not come out completely, use needle-nose pliers to remove.

15. Apply 396 kPa (57 psi) of compressed air into the oil passage shown to remove the second brake piston.

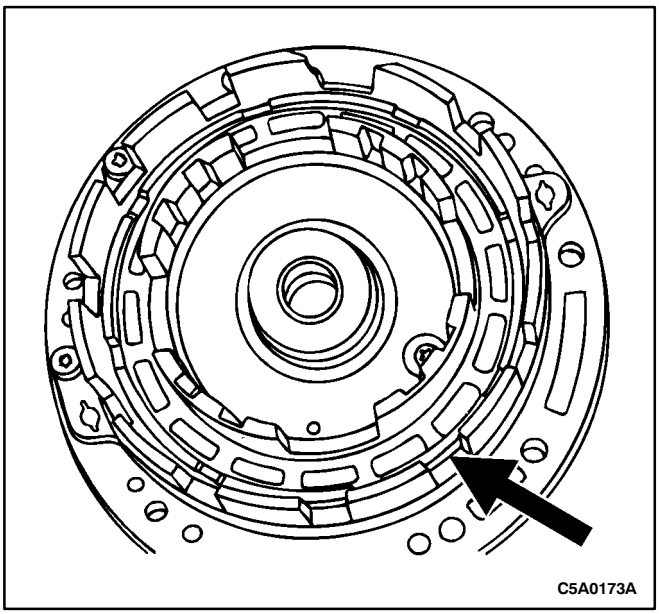

16. Remove the second brake piston.

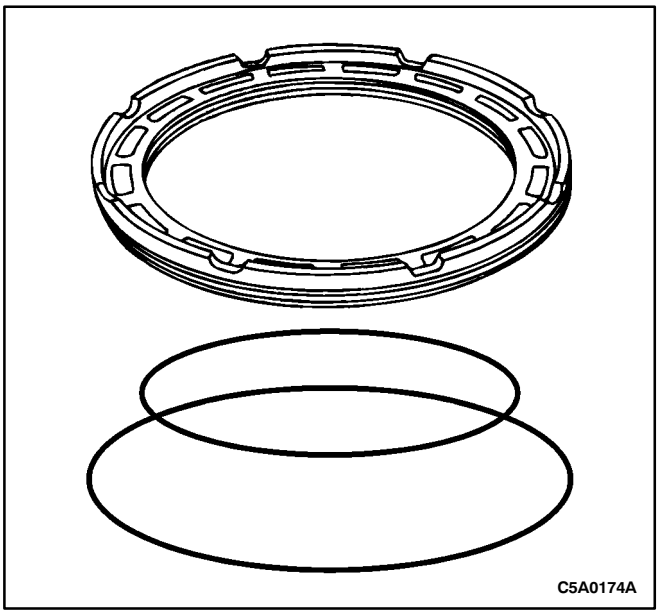

17. Remove and discard the second brake piston O-rings.

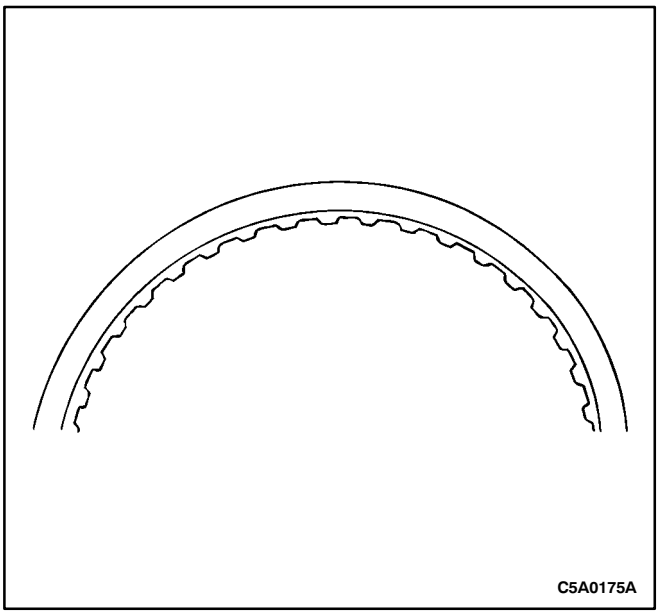

Notice: Check the steel and friction plates for wear or damage. Replace as necessary.

Notice: New clutch plates should be soaked in TOTAL FLUID HX for two hours before being assembled.

18. Inspect the second brake flange, steel and friction plates.

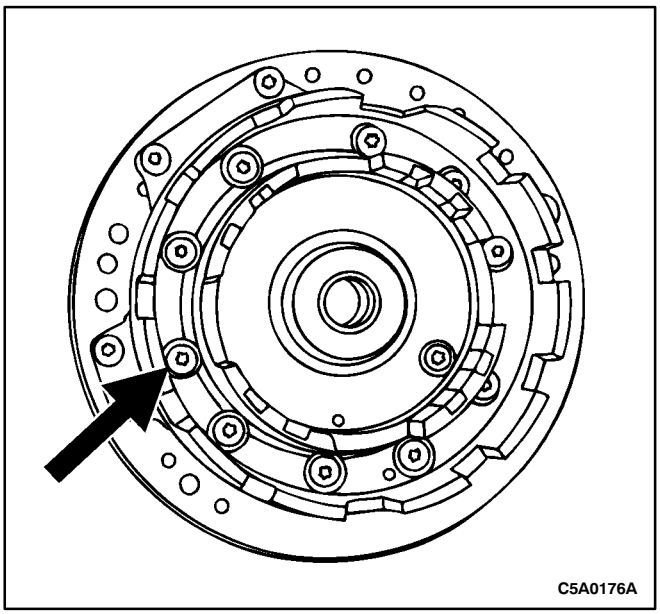

19. Remove the stator support to oil pump body bolts.

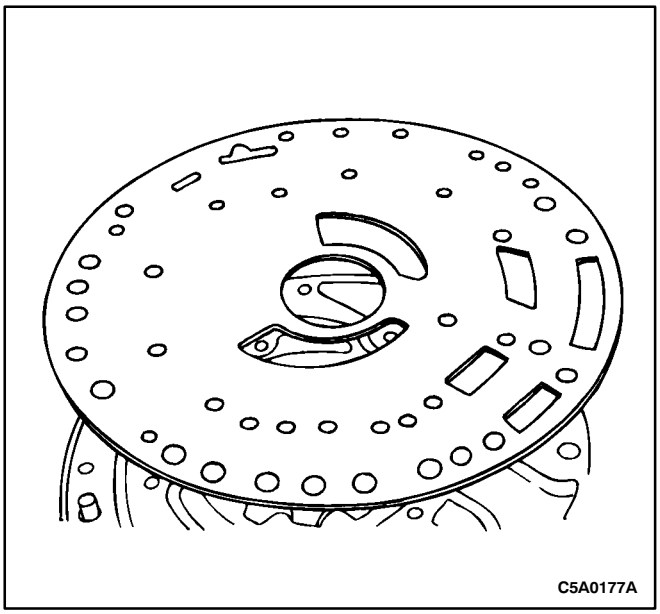

Notice: Replace the oil pump plate if the gear face contact surface is scratched or worn.

20. Remove the oil pump plate.

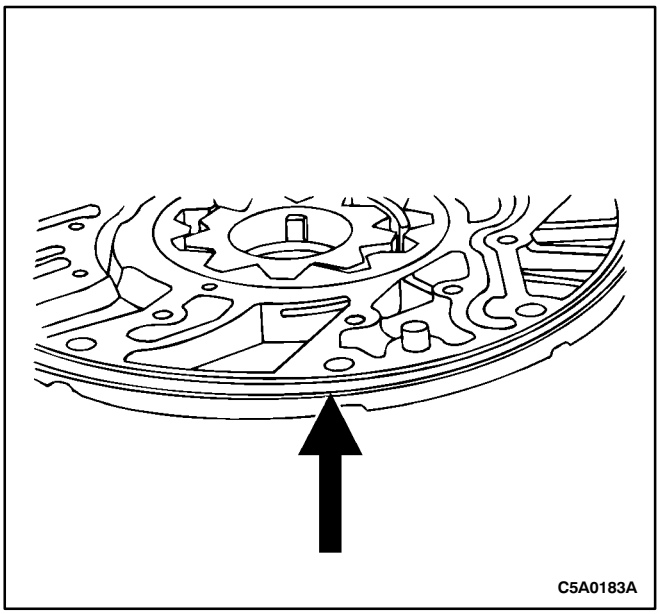

21. Remove and discard the oil pump body O-ring.

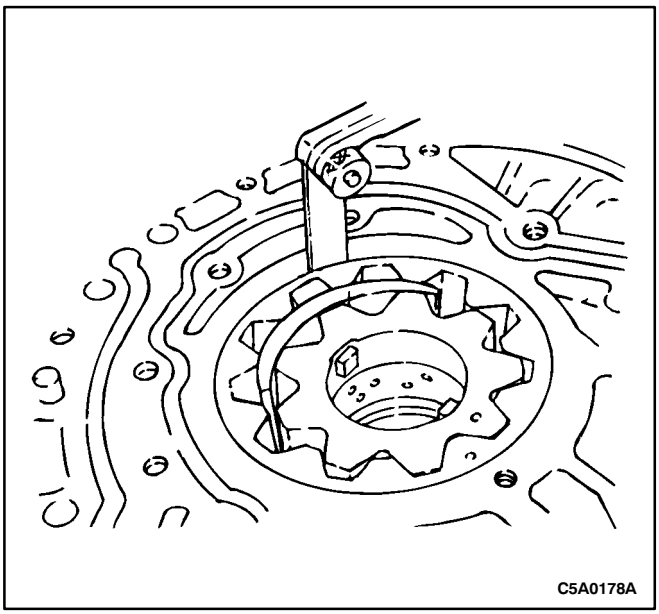

22. Measure the clearance between the pump driven gear and the oil pump body. If not as specified, replace the gears.

Standard Clearance	0.075-0.150 mm (0.003-0.006 in)
Maximum	0.20 mm (0.008 in)

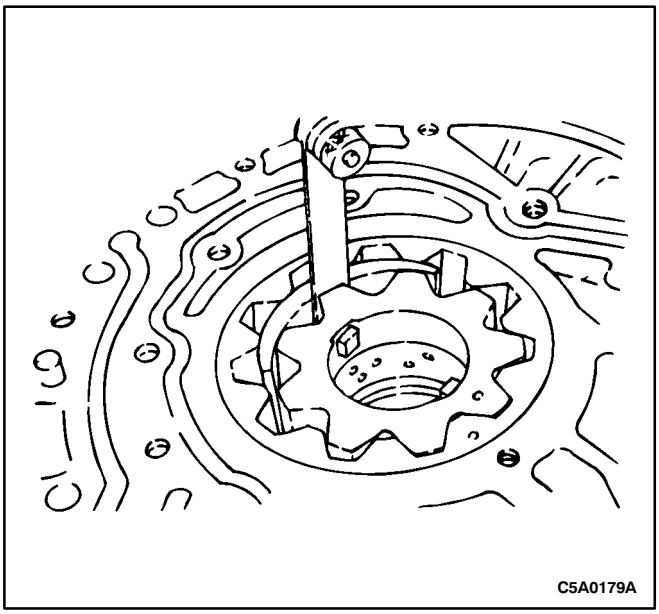

23. Measure the clearance between the pump drive gear and the oil pump body boss. If not as specified, replace the oil pump body and gears.

Standard Clearance	0.004-0.248 mm (0.0001-0.010 in)
Maximum	0.298 mm (0.012 in)

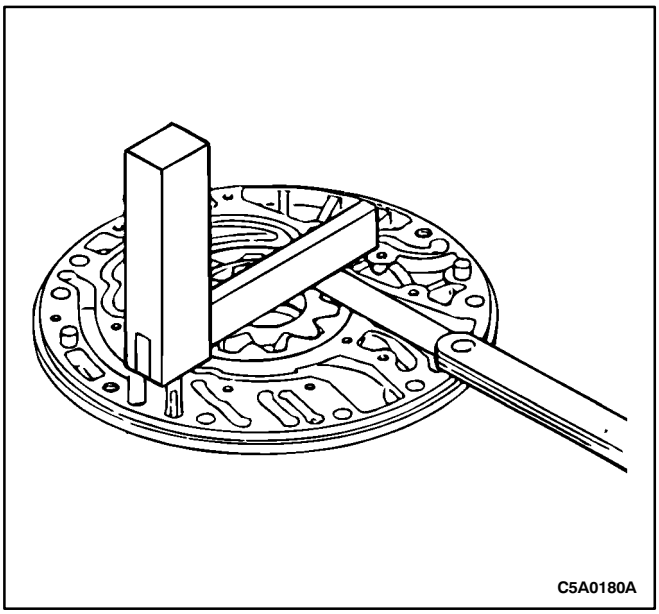

24. Measure the clearance between the pump drive gear, driven gear and the oil pump body. If not as specified, replace the oil pump body and gears.

Standard Clearance	0.030-0.050 mm (0.001-0.002 in)
Maximum	0.100 mm (0.004 in)

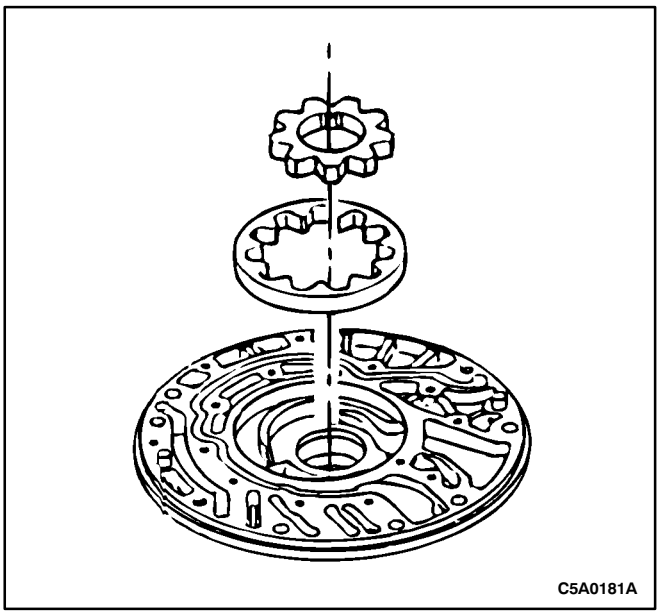

Notice: Check the pump driven gear and drive gear for wear or damage. Replace as necessary.

25. Remove the pump driven gear and pump drive gear.

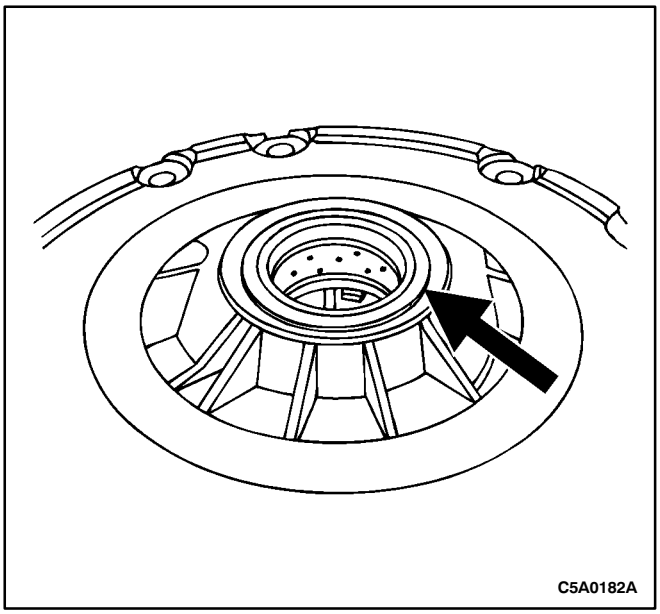

Notice: Be careful not to damage the oil pump body bushing.

26. Remove and discard the oil pump seal.

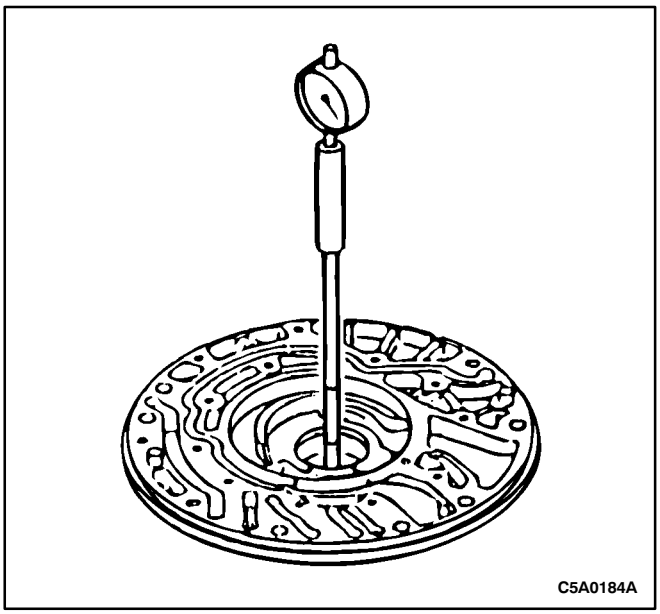

27. Inspect the oil pump body bushing.
- Using a dial indicator, measure the inner diameter of the oil pump body bushing. Measure the bushing at three different places and calculate the average. If it is greater than the maximum, replace the oil pump body.

Standard	38.113-38.138 mm (1.500-1.501 in)
Maximum	38.180 mm (1.503 in)

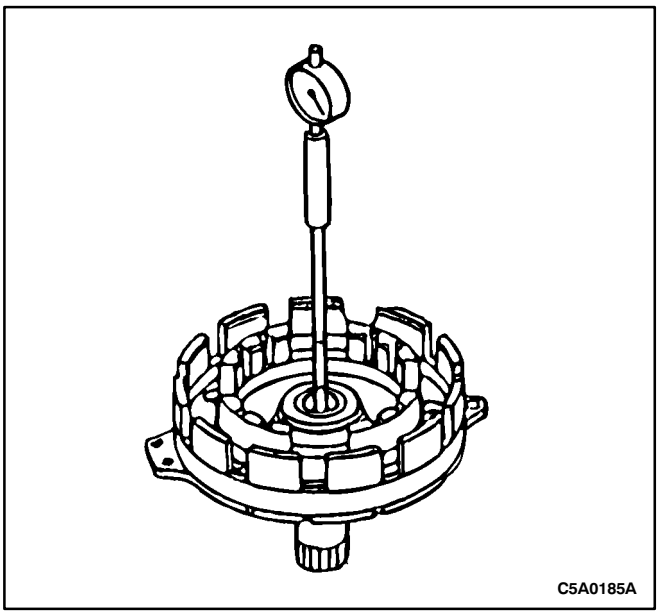

28. Inspect the stator support shaft bushing.
    - Using a dial indicator, measure the inner diameter of the stator support shaft bushing. Measure the bushing at three different places and calculate the average. If it is greater than the maximum, replace the stator support.

Standard	21.510-21.527 mm (.846-.847 in)
Maximum	21.570 mm (.849 in)

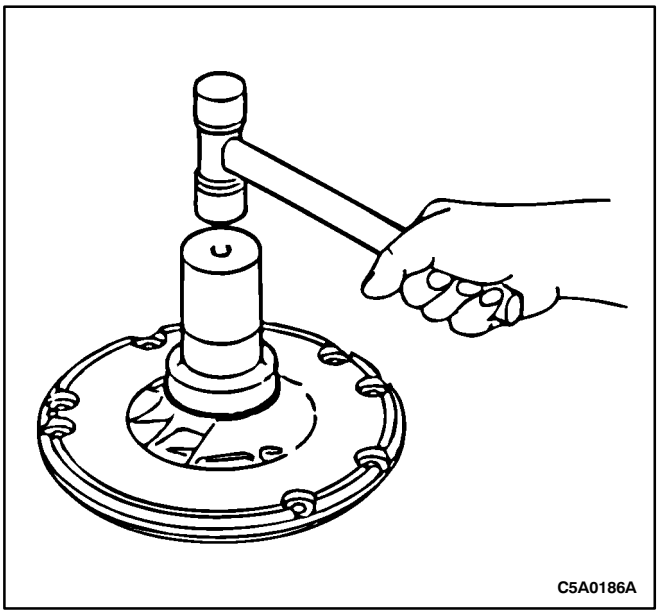

Assembly Procedure

1. Clean the components using a clean, high-quality parts cleaning solvent and use compressed air to dry all parts. Inspect all parts for damage or wear.

Notice: Apply automatic transmission fluid to the inner surface of the oil pump body.

Notice: Apply Transjel Assembly Lubricant J-36850 or equivalent to the oil lip seal.

Notice: The seal should be flush with the outer edge of the oil pump body.

2. Install a new oil pump seal using oil seal installer KM-674.

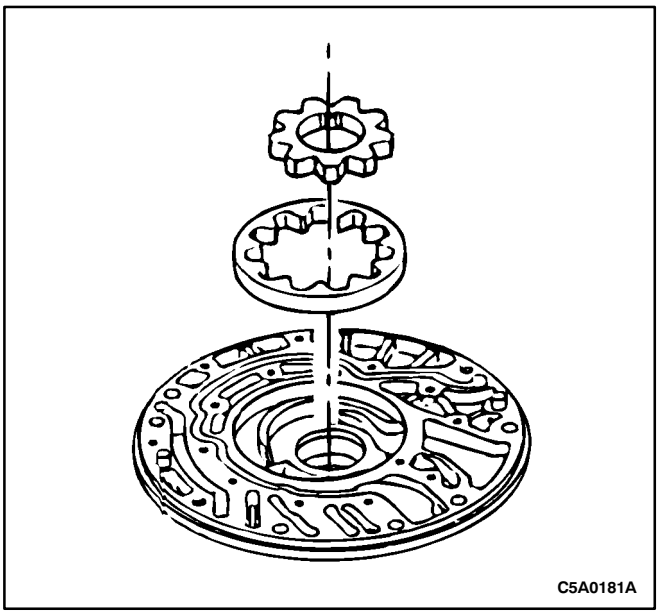

3. Install the pump driven gear and pump drive gear.
    - Align the marks on the gears.
    - Apply TOTAL FLUID HX into the gear cavity

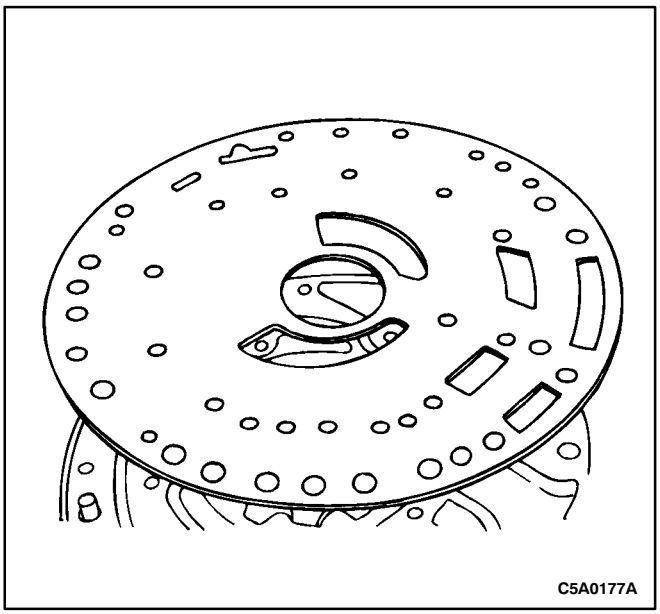

Notice: Align the oil pump plate hole with the dowel pin in the oil pump body.

4. Install the oil pump plate.

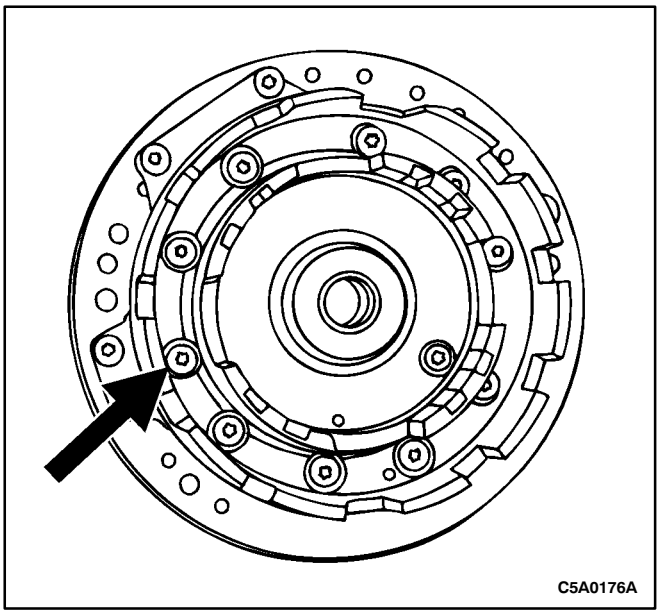

Caution: Tighten the bolts evenly and gradually.

5. Install the stator support.
   - Align the stator support with each bolt hole in the oil pump body and temporarily tighten the bolts evenly and gradually.

Tighten

Tighten the M5 bolts to 6-7 N•m (53-62 lb-in) and the M6 bolts to 10-14 N•m (89-124 lb-in).

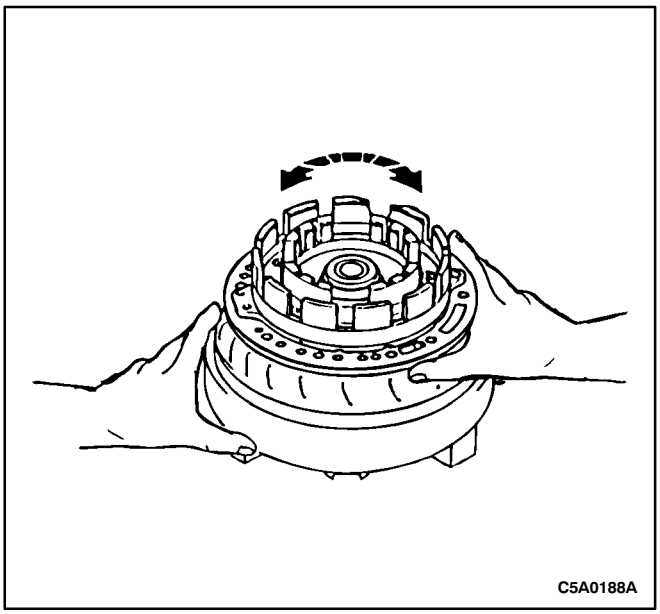

6. Check the pump drive gear rotation.
   - Install the pump assembly into the torque converter to verify smooth operation.

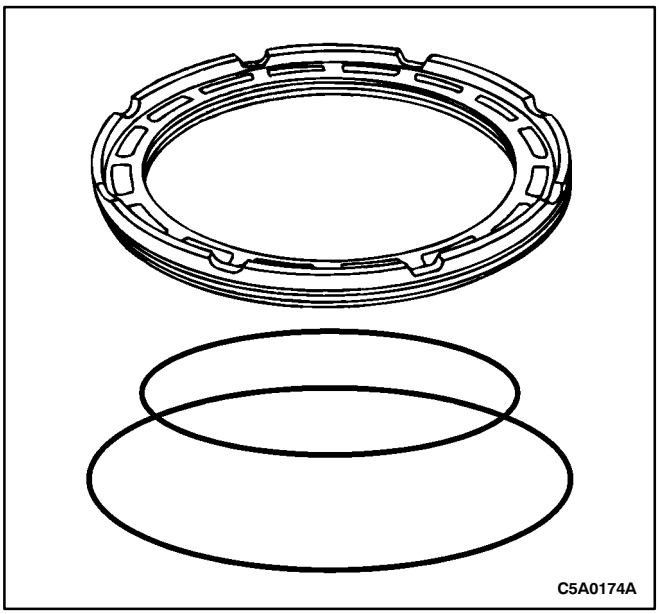

7. Install new second brake piston O-rings.

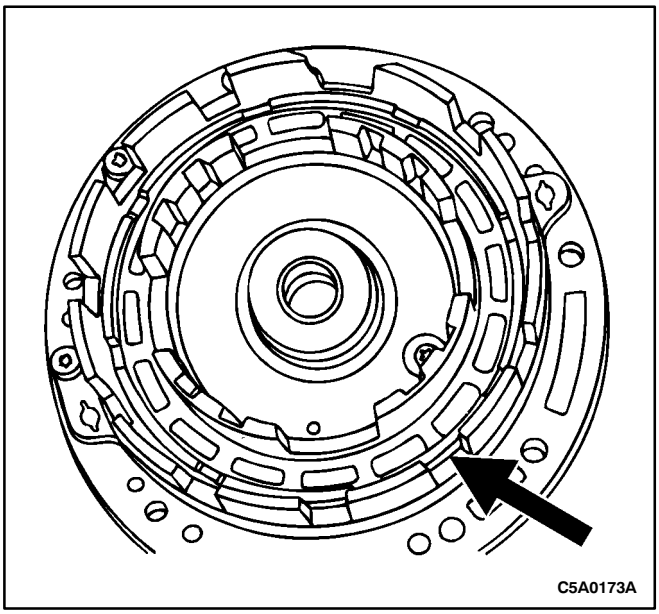

Notice: Apply TOTAL FLUID HX to the new second brake piston O-rings and the stator support seal area.

Notice: Seat the piston by pushing evenly around the circumference of the piston, being careful not to damage the outer seal.

8. Install the second brake piston.

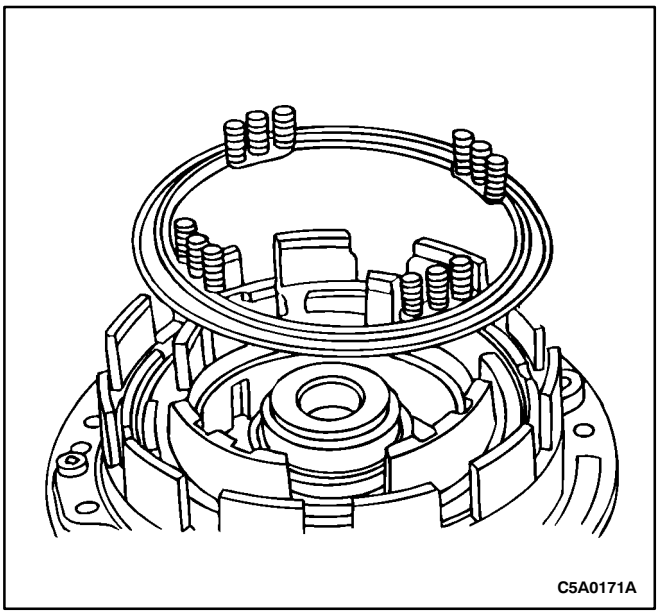

9. Install the second brake piston return spring.

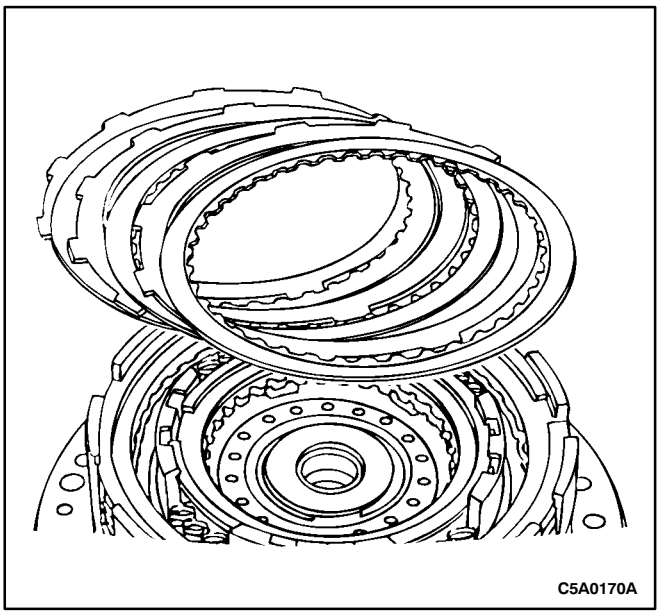

Notice: The flanges are thicker than the steels.

10. Install the second brake clutch pack.
    - The installation order is: flange-friction-steel-friction-steel-friction.

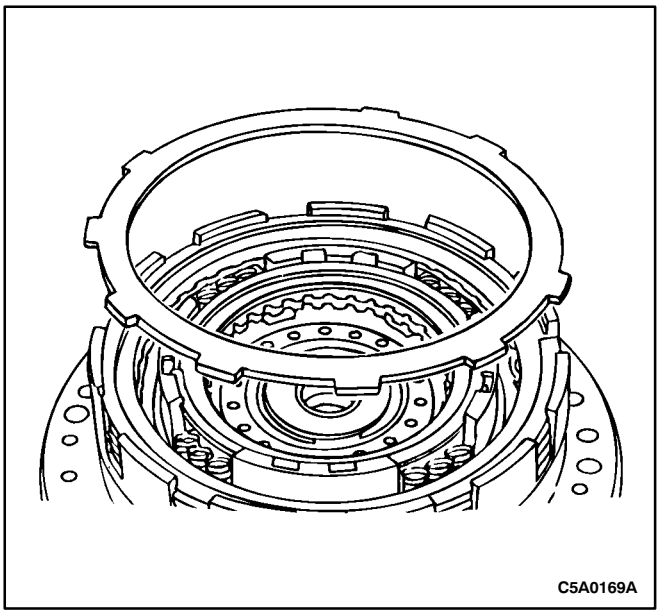

Notice: The flanges are thicker than the steels.

11. Install the second brake top flange.

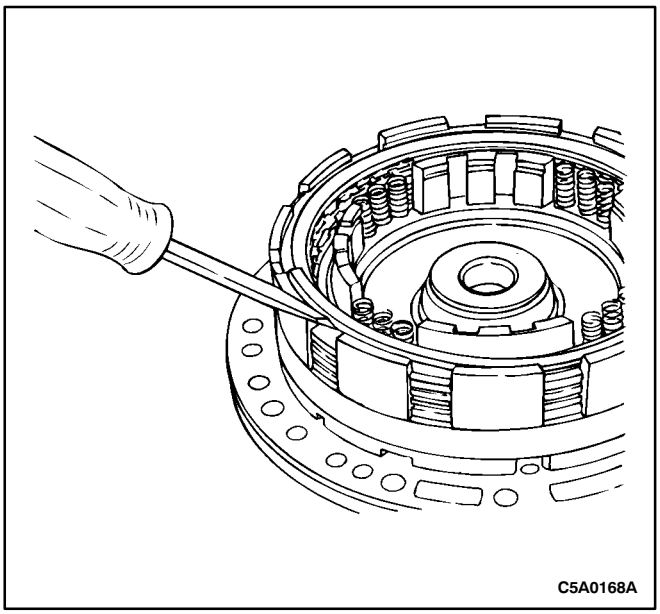

Notice: Be sure the snap ring end gap is not aligned with one of the stator support cutouts.

12. Install the snap ring.

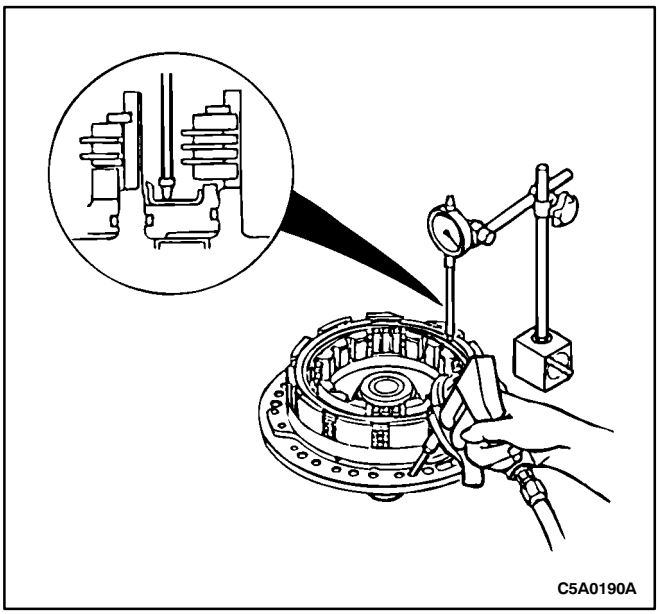

WARNING: USE CAUTION WHEN CHECKING COMPONENTS WITH COMPRESSED AIR OR PERSONAL INJURY MAY RESULT.

13. Check the second brake clutch operation.
    - Install a dial indicator.
    - Apply 396 kPa (57 psi) of compressed air into the oil passage shown and measure the second brake clutch piston stroke. The piston stroke is 1.14-1.860 mm (0.045-0.073 in). The clutch should make a solid apply sound, with no whistle or sign of leaks.

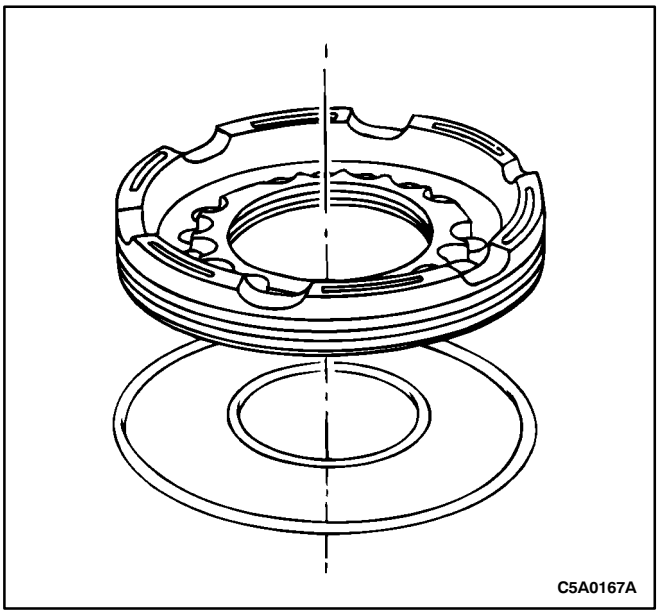

14. Install new second coast piston O-rings.

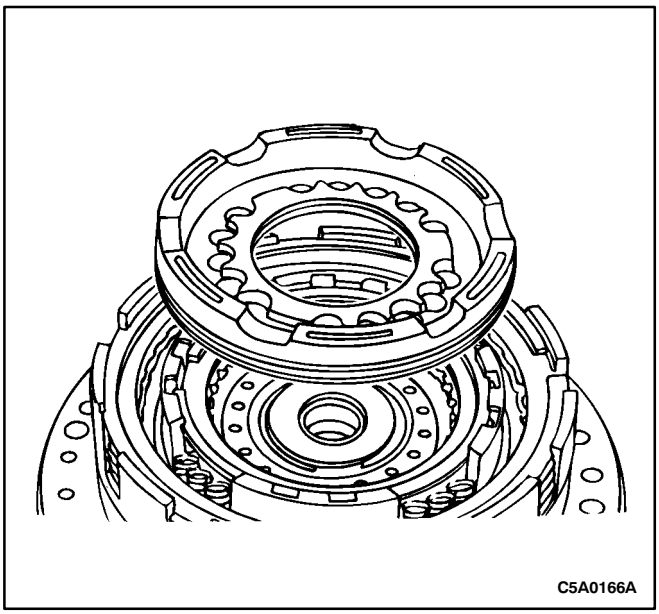

Notice: Apply TOTAL FLUID HX to the new second coast piston O-rings and the stator support seal area.

Notice: Seat the piston by pushing evenly around the circumference of the piston, being careful not to damage the outer seal.

15. Install the second coast piston.

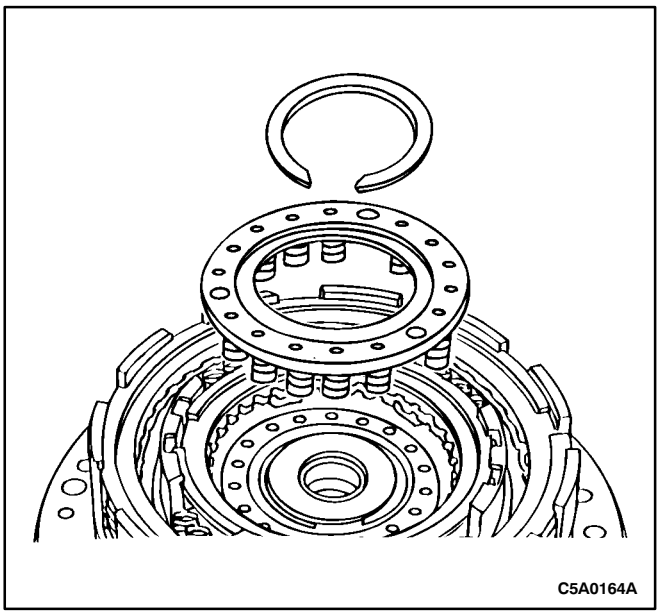

16. Install the second coast piston return spring. Position spring compressor KM-698 on the clutch piston return spring. Using a press, compress the spring, then install the snap ring in the groove.

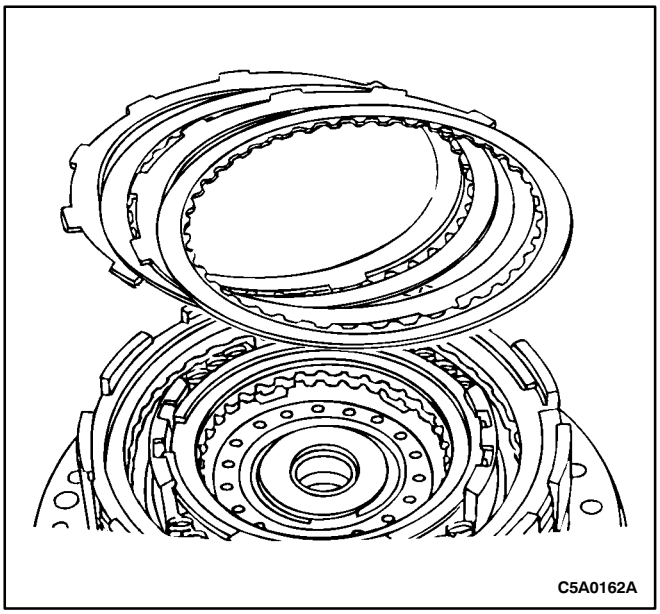

17. Install the coast clutch disc pack.
    - The installation order is: steel-friction-steel-friction.

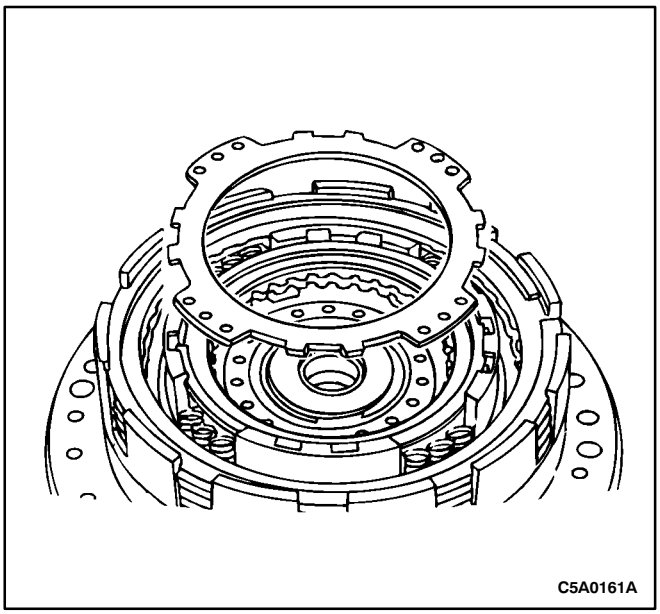

18. Install the coast clutch pressure plate.

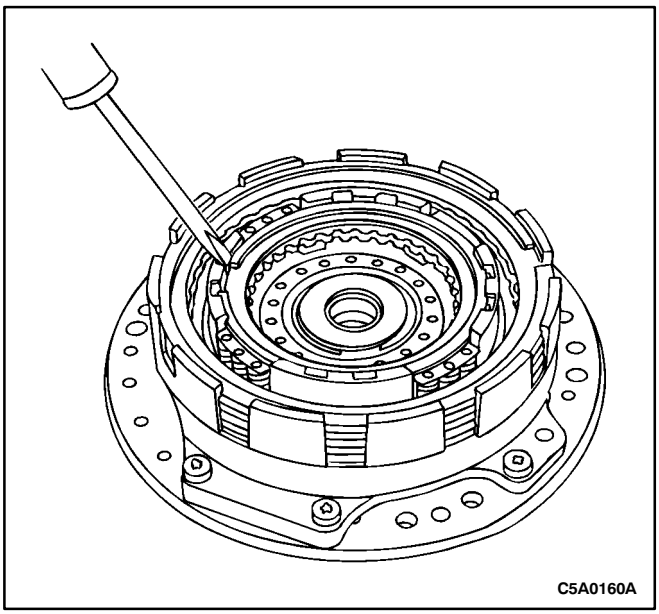

19. Install the snap ring.

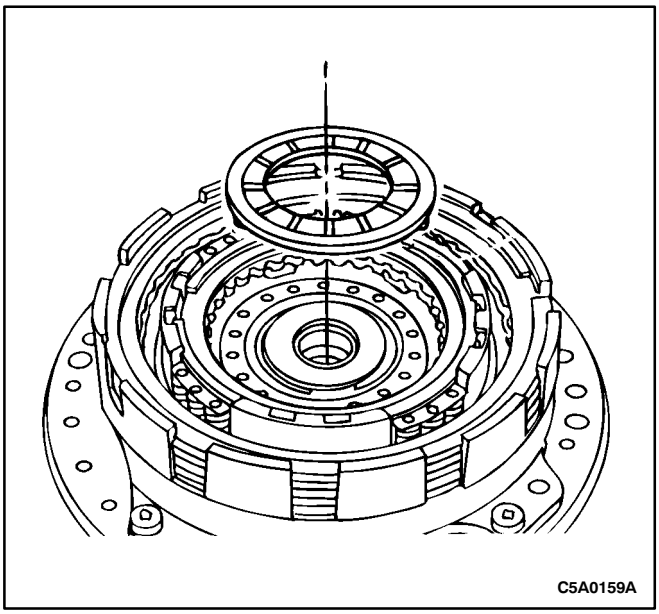

Caution: Make sure the lugs of the thrust washer align with the second coast piston return spring.

20. Install the thrust washer.

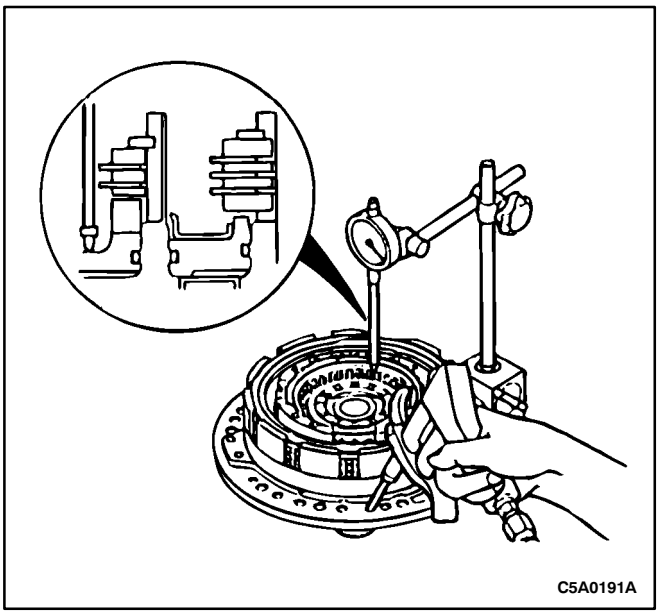

WARNING: USE CAUTION WHEN CHECKING COMPONENTS WITH COMPRESSED AIR OR PERSONAL INJURY MAY RESULT.

21. Check the second coast clutch operation.
    - Install a dial indicator.
    - Apply 396 kPa (57 psi), of compressed air into the oil passage and measure the second coast clutch piston stroke. The piston stroke is 0.760-1.440 mm (0.029-0.056 in). The clutch should make a solid apply sound, with no whistle or sign of leaks.

SECOND COAST, SECOND BRAKE HUB AND ONE-WAY CLUTCH

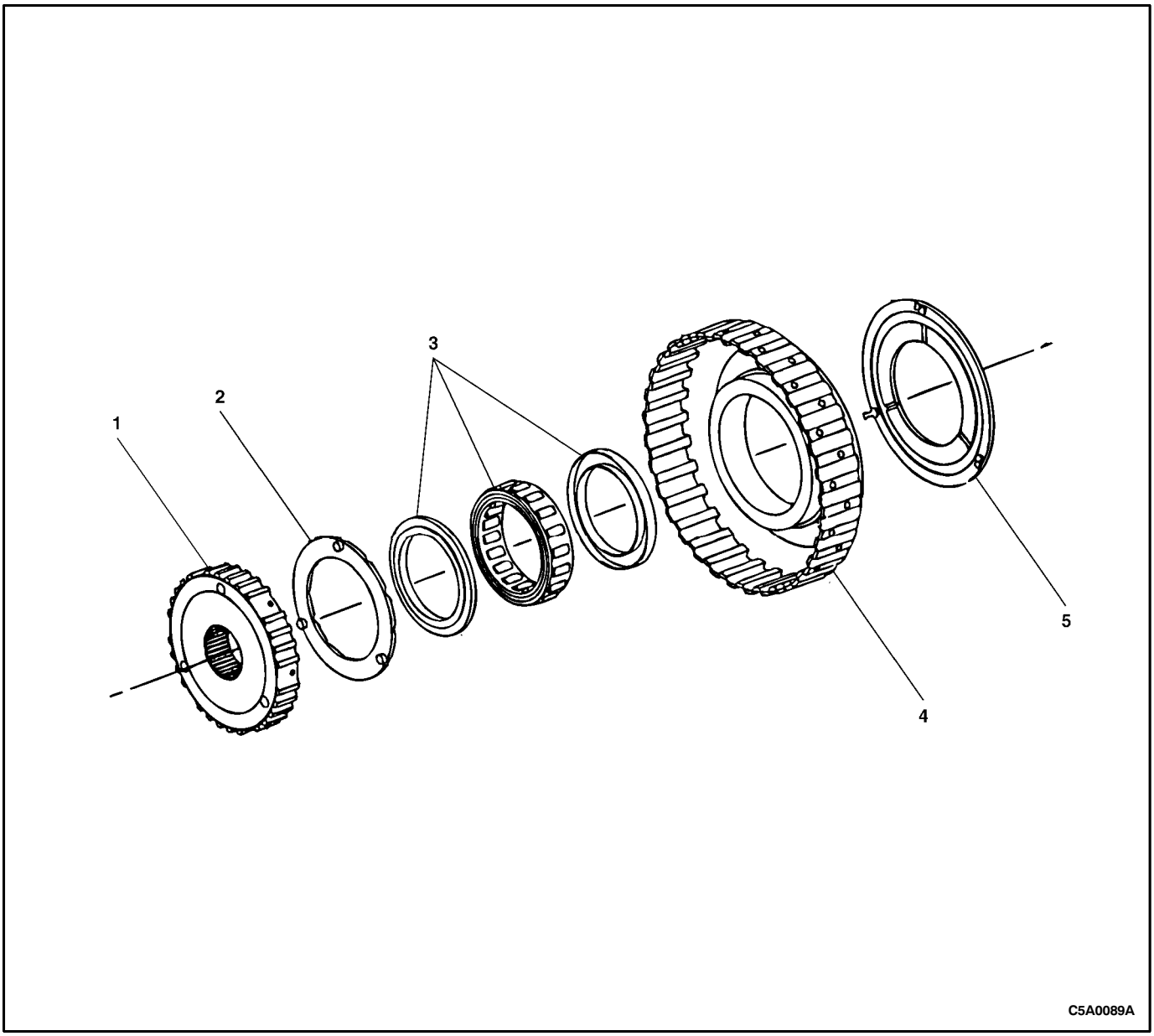

1. Second Coast Brake Hub (Inner Race)
2. Thrust Washer
3. one-way Clutch
4. Second Brake Hub (Outer Race)
5. Rear Thrust Washer

Disassembly Procedure

1. Remove the rear thrust washer.

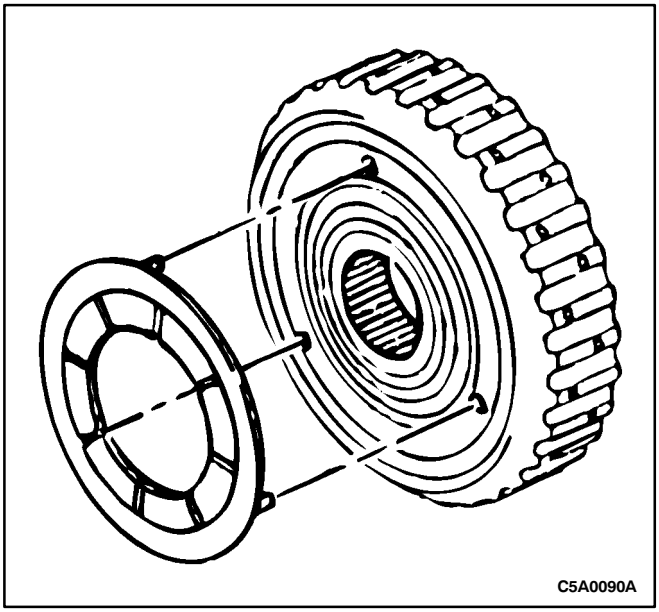

2. Remove the second coast brake hub from the second brake hub. Separate the thrust washer from the inner race.

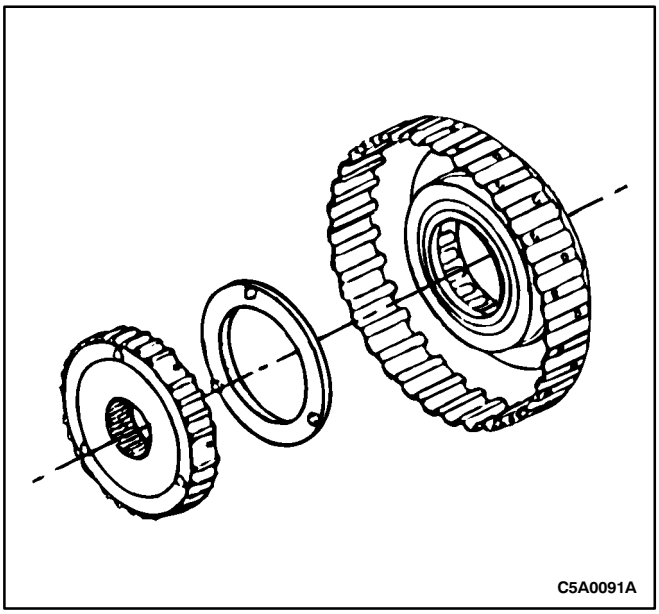

3. Remove the one-way clutch from the second brake hub.

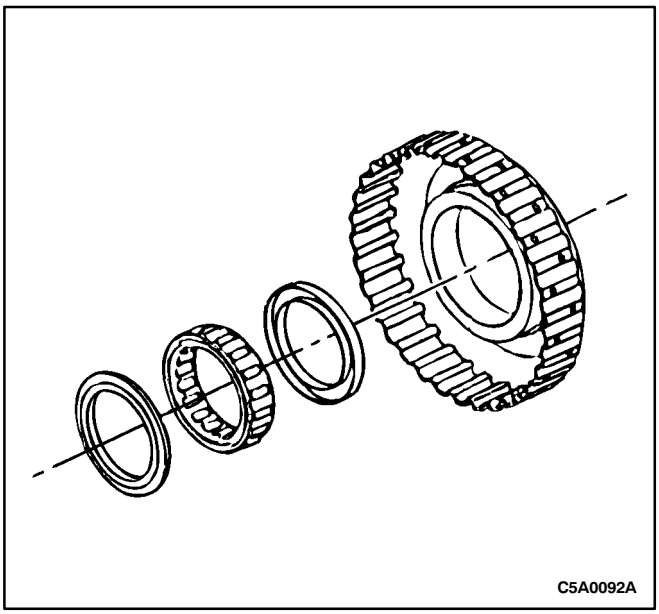

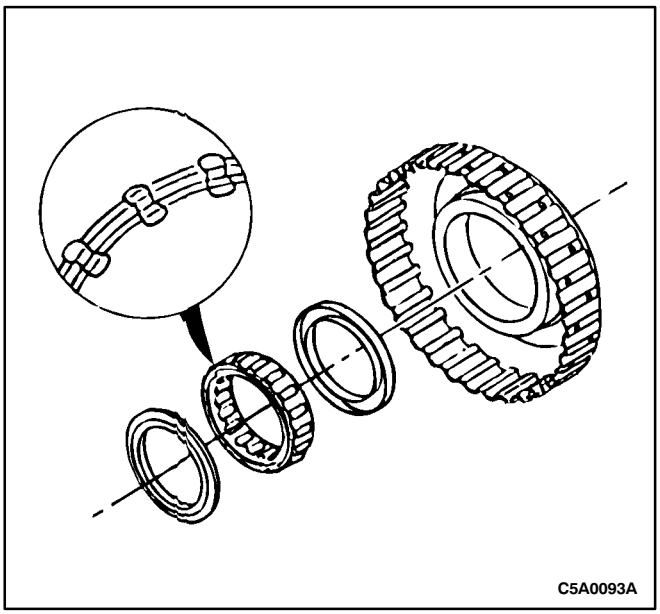

Assembly Procedure

1. Clean the components using a clean, high-quality parts cleaning solvent and use compressed air to dry all parts. Inspect all parts for damage or wear.
2. Install the one-way clutch into the outer race.

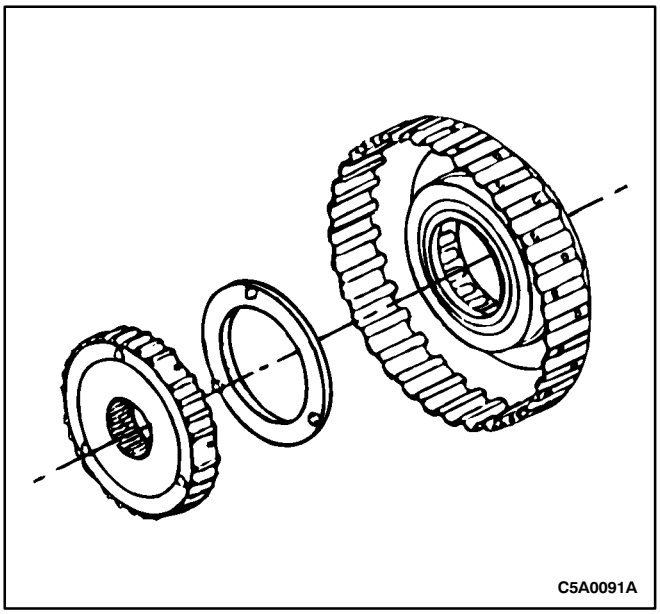

Notice: Apply Transjel Assembly Lubricant J-36850 or equivalent to the thrust washer.

Notice: While turning the inner race, slide it onto the outer race.

3. Position the thrust washer onto the inner race. Install the second coast brake hub into the second brake hub.

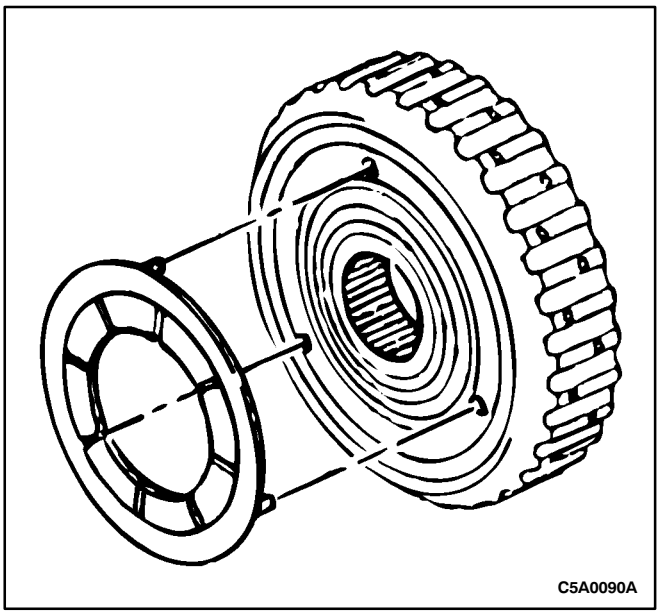

Notice: Apply Transjel Assembly Lubricant J-36850 or equivalent to the thrust washer.

4. Install the rear thrust washer.

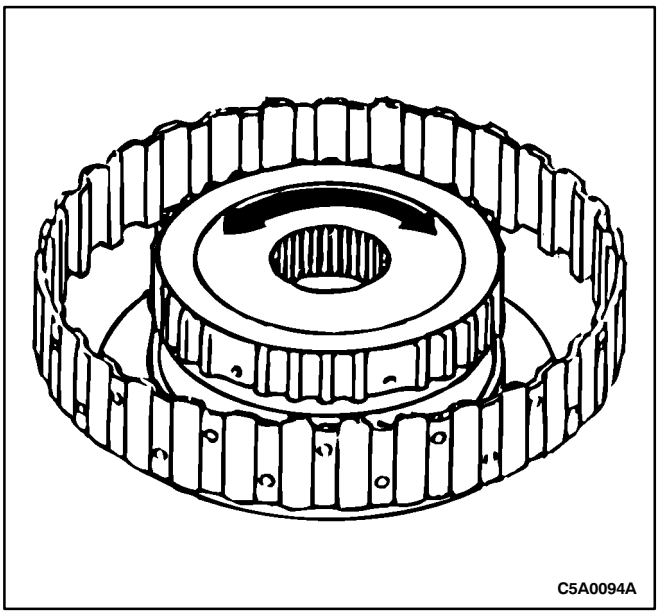

5. Verify the operation of the one-way clutch. While holding the outer race, turn the inner race. The inner race should rotate smoothly when turned clockwise, and lock when turned counterclockwise.

FORWARD AND DIRECT CLUTCH

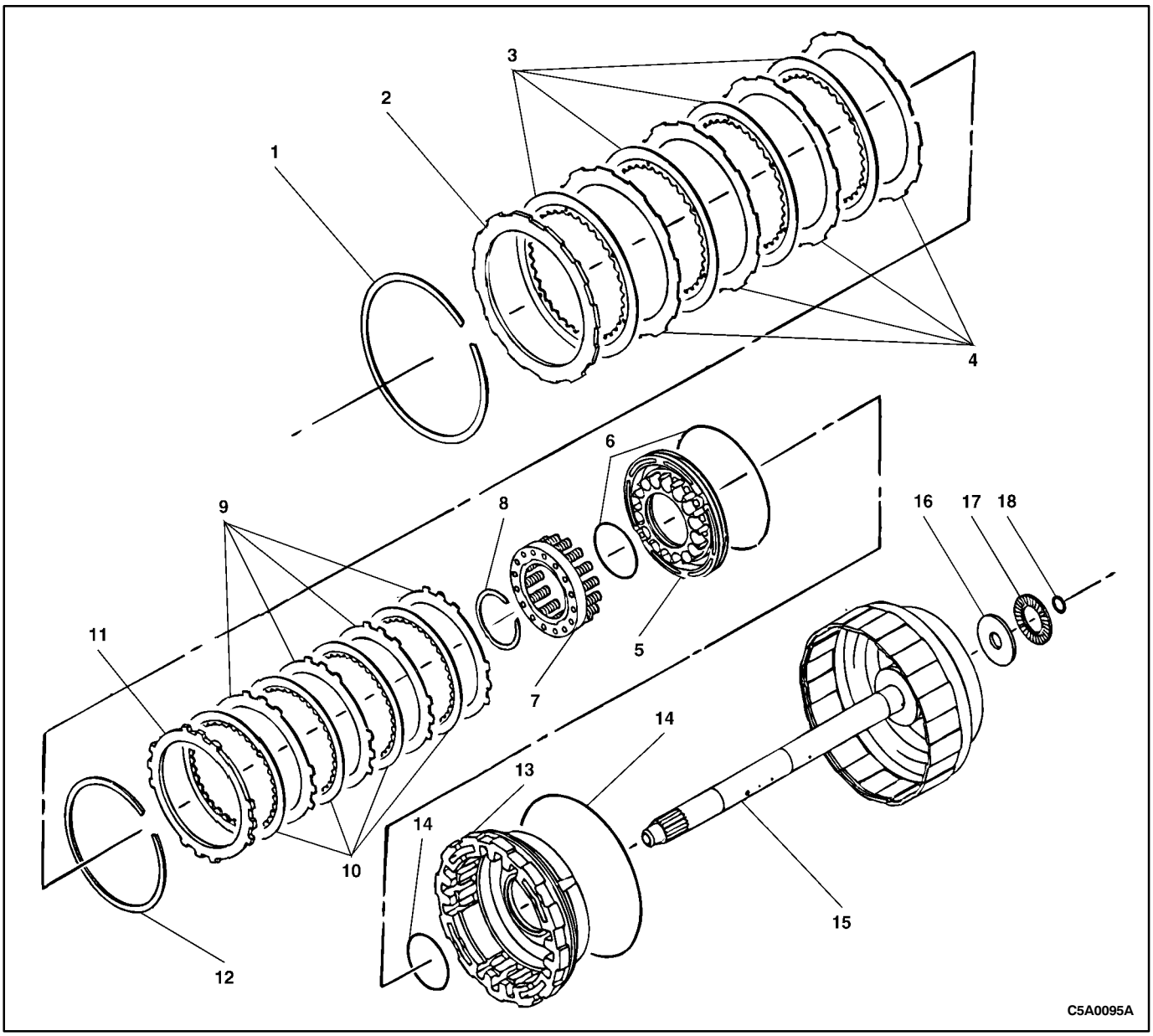

1. Snap Ring
2. Forward Clutch Pressure Plate
3. Forward Clutch Friction Plate
4. Forward Clutch Steel Plate
5. Direct Clutch Piston
6. O-Rings
7. Clutch Piston Return Spring
8. Snap Ring
9. Direct Clutch Steel Plate
10. Direct Clutch Friction Plate
11. Direct Clutch Pressure Plate
12. Snap Ring
13. Forward Clutch Piston
14. O-Rings
15. Input Shaft
16. Thrust Bearing Race
17. Thrust Bearing
18. Seal Ring

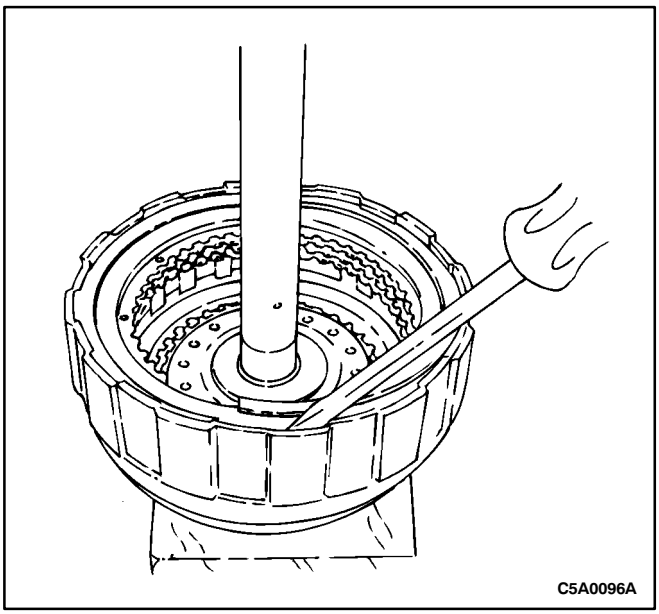

Tools Required

KM-698 Spring Compressor

Disassembly Procedure

WARNING: USE CAUTION WHEN REMOVING SNAP RINGS OR PERSONAL INJURY MAY RESULT.

1. Carefully remove the snap ring.

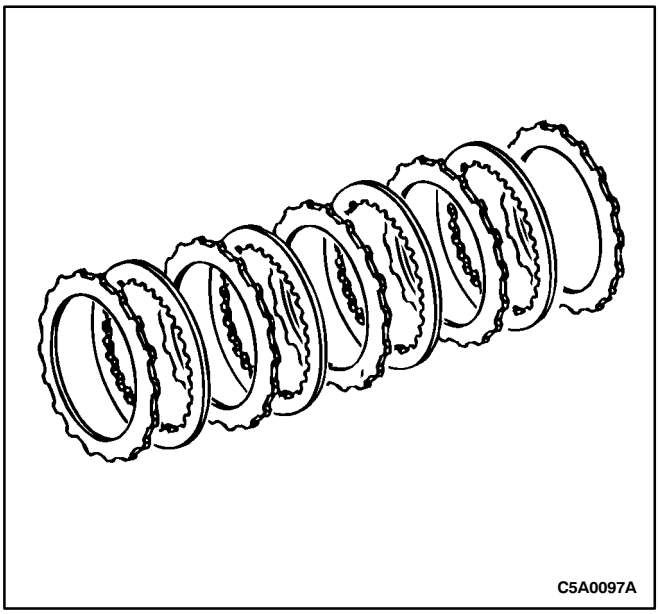

2. Remove the forward clutch pressure plate and the forward clutch disc pack.

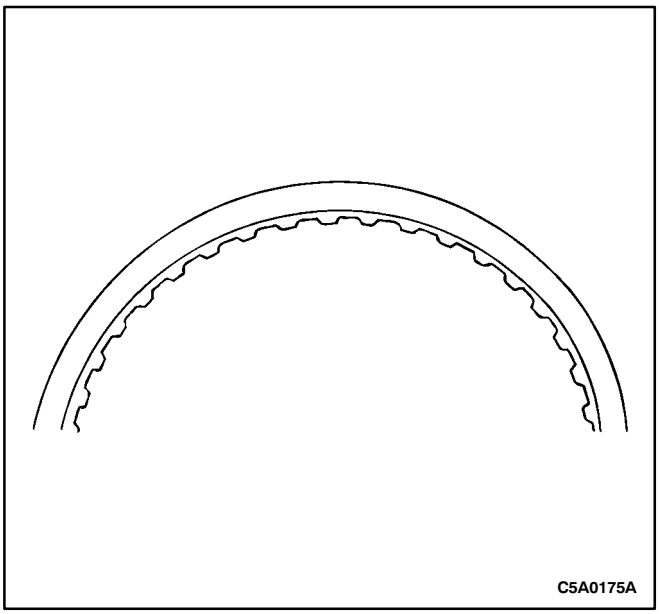

Notice: Check the steel and friction plates for wear or damage. Replace as necessary.

Notice: New clutch plates should be soaked in TOTAL FLUID HX for two hours before being assembled.

3. Inspect the forward clutch steel and friction plates.

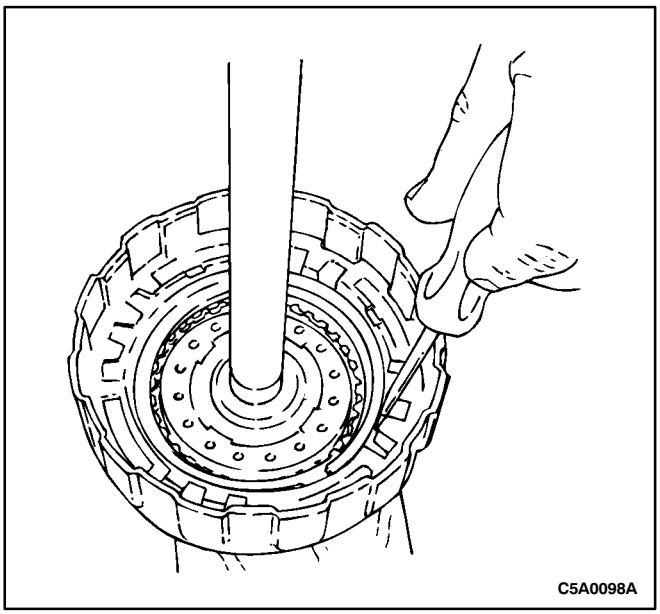

WARNING: USE CAUTION WHEN REMOVING SNAP RINGS OR PERSONAL INJURY MAY RESULT.

4. Carefully remove the snap ring.

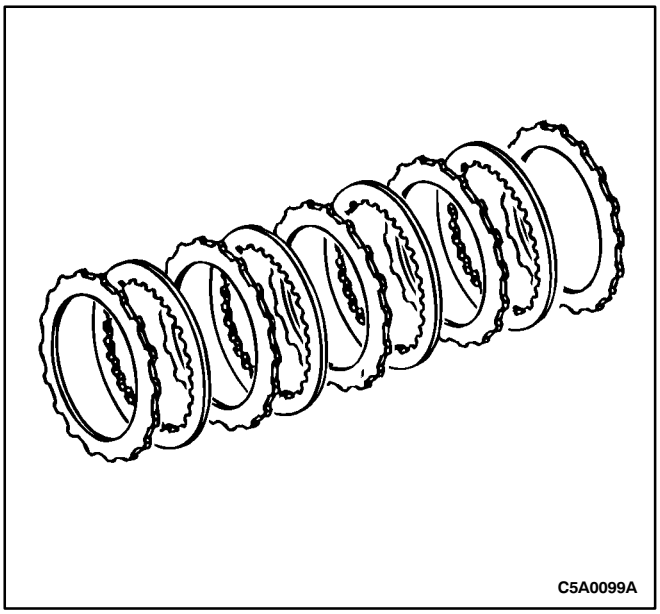

5. Remove the direct clutch pressure plate and the direct clutch disc pack.

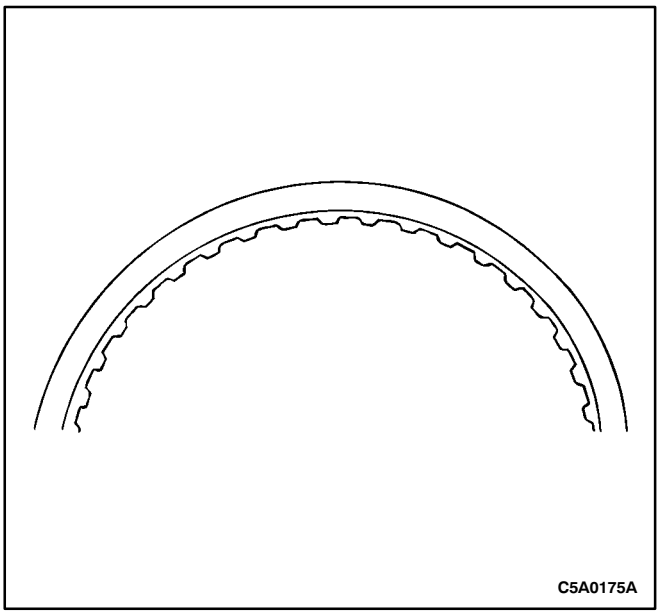

Notice: Check the steel and friction plates for wear or damage. Replace as necessary.

Notice: New clutch plates should be soaked in TOTAL FLUID HX for two hours before being assembled.

6. Inspect the direct clutch steel and friction plates.

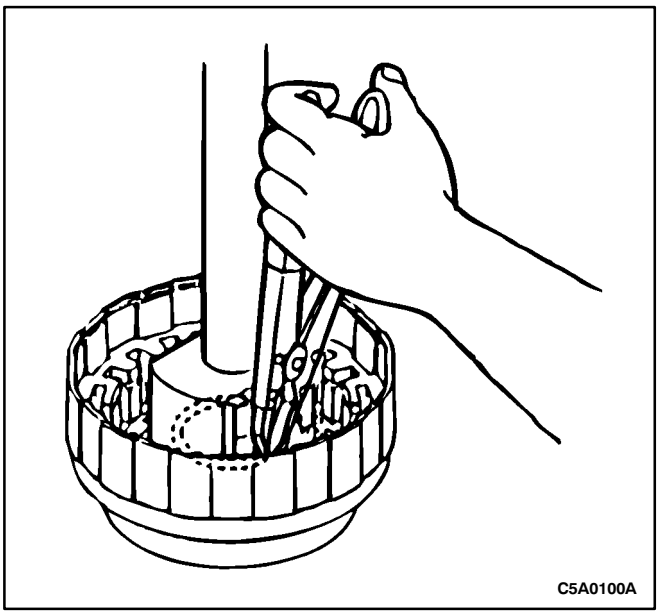

7. Position spring compressor KM 698 on the clutch piston return spring. Using a press, compress the springs, then remove the snap ring from the groove.

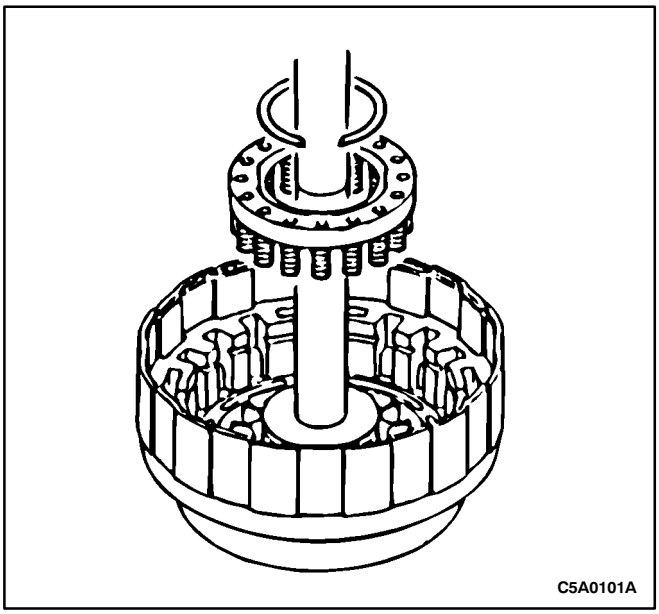

8. Remove the snap ring and the clutch piston return spring.

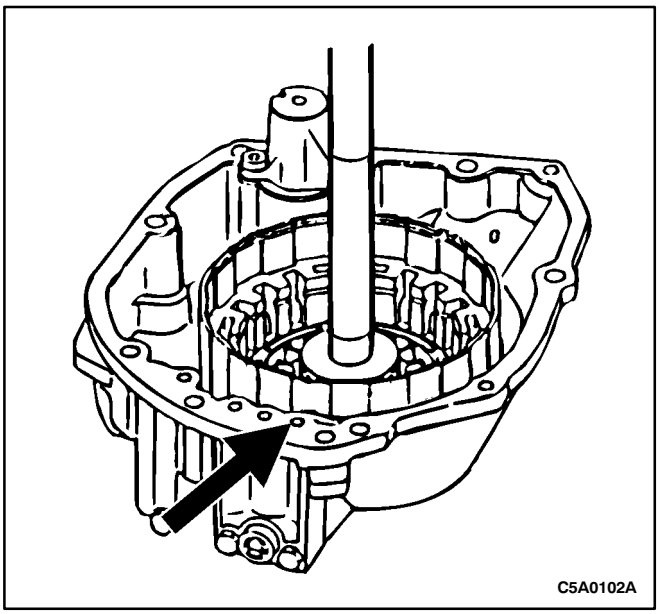

WARNING: USE CAUTION WHEN REMOVING COMPONENTS WITH COMPRESSED AIR OR PERSONAL INJURY MAY RESULT.

Notice: If the piston does not come out completely, use needlenose pliers to remove.

9. Install the input shaft into the rear case. Apply 396 kPa (57 psi) of compressed air into the oil passage shown to remove the direct clutch piston.

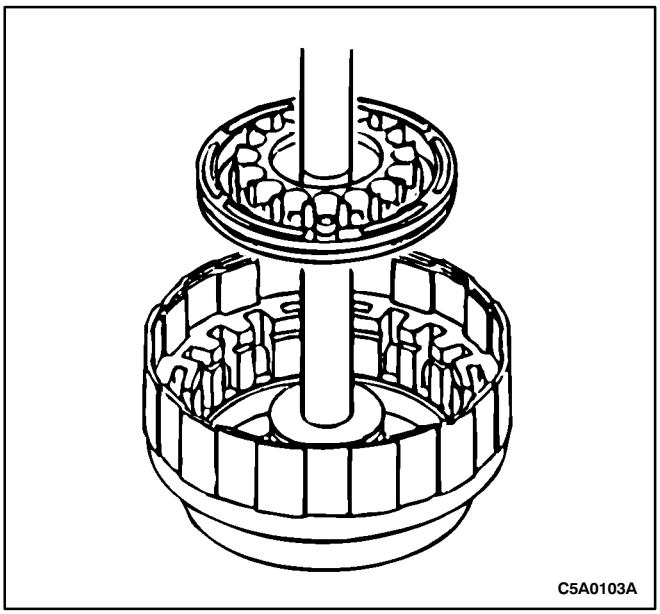

10. Remove the direct clutch piston.

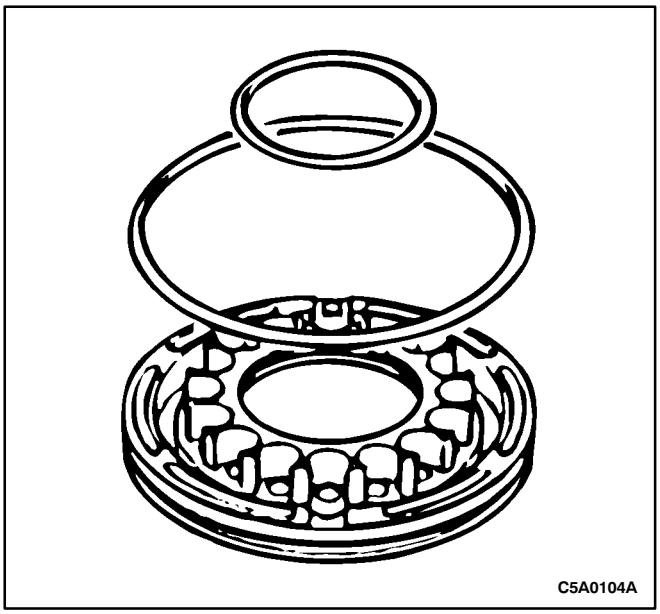

11. Remove and discard the direct clutch piston O-rings.

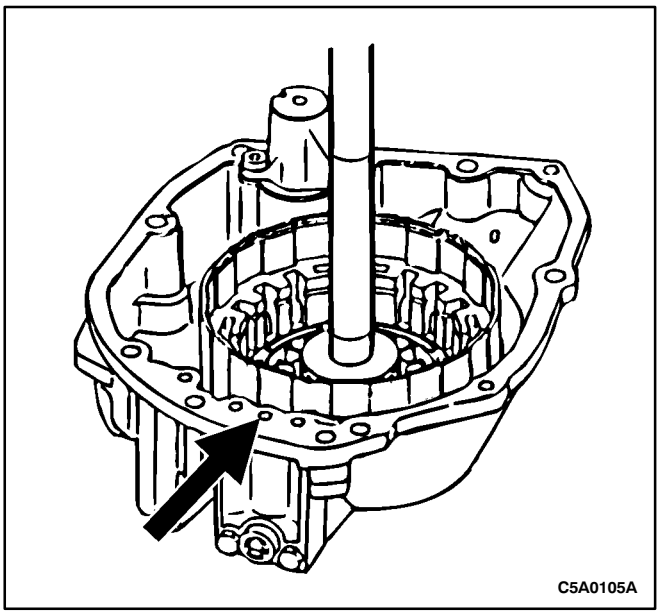

WARNING: USE CAUTION WHEN REMOVING COMPONENTS WITH COMPRESSED AIR OR PERSONAL INJURY MAY RESULT.

Notice: If the piston does not come out completely, use needlenose pliers to remove.

12. Install the input shaft into the rear case. Apply 396 kPa (57 psi) of compressed air into the oil passage shown to remove the forward clutch piston.

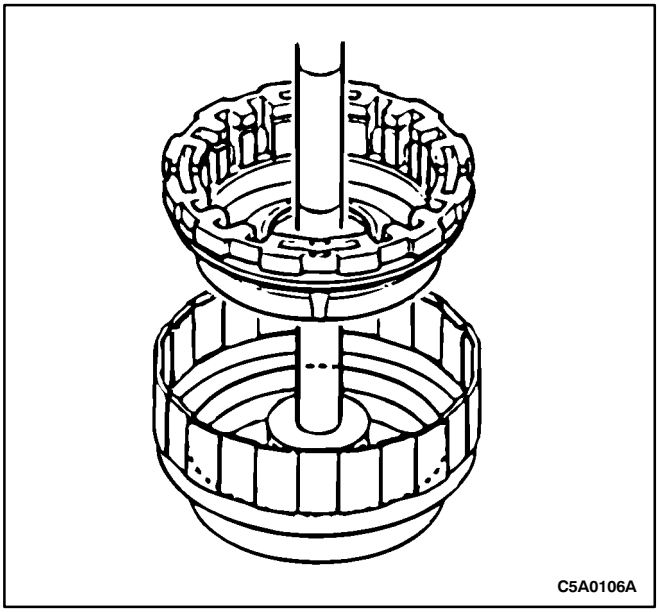

13. Remove the forward clutch piston.

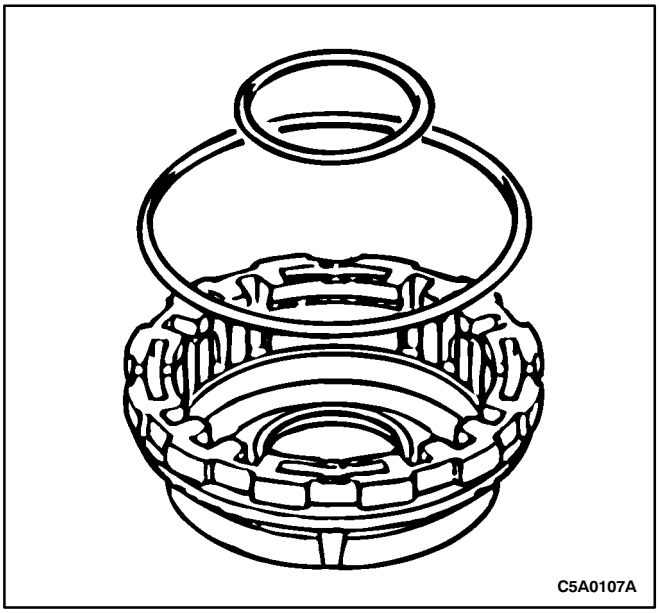

14. Remove and discard the forward clutch piston O-rings.

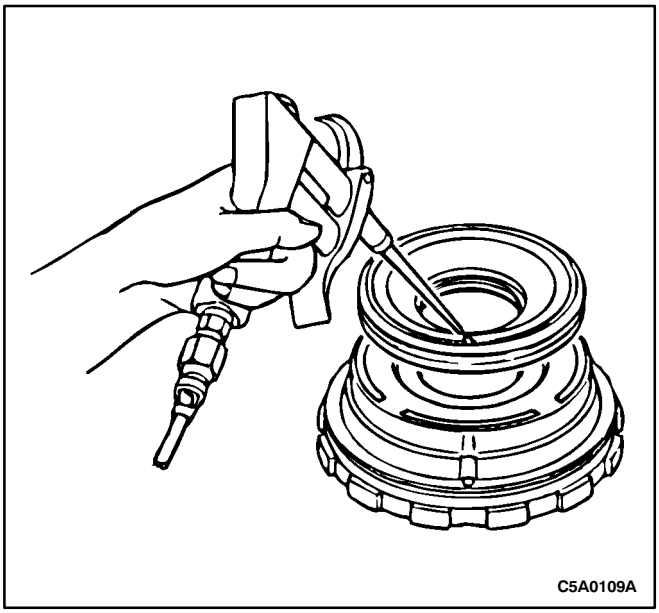

WARNING: USE CAUTION WHEN CHECKING COMPONENTS WITH COMPRESSED AIR OR PERSONAL INJURY MAY RESULT.

15. Inspect the forward and direct clutch piston.
    - Check that the valve does not leak by applying low-pressure compressed air.

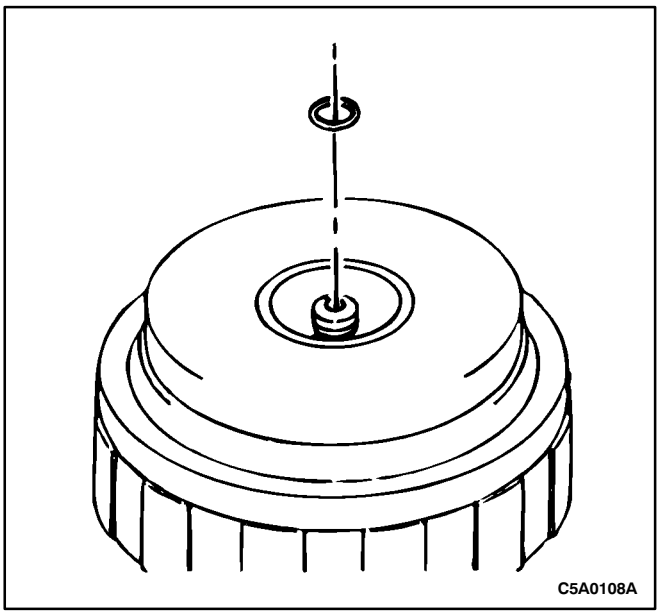

16. Remove the seal ring.

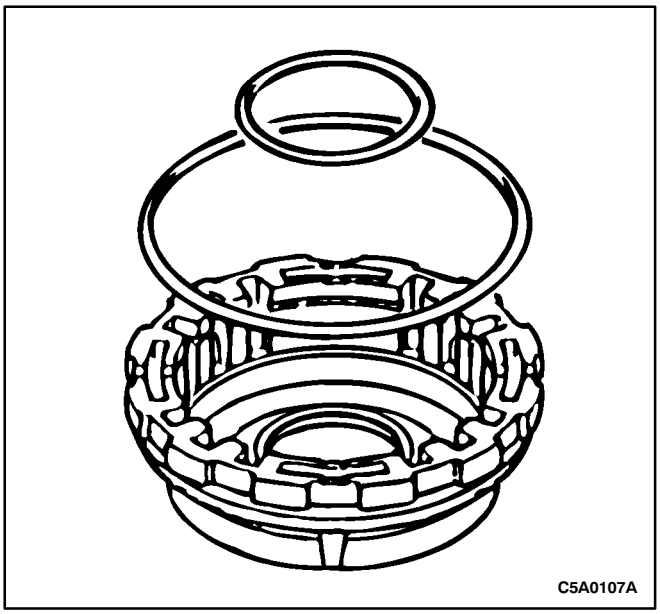

Assembly Procedure

1. Clean the components using a clean, high-quality parts cleaning solvent and use compressed air to dry all parts. Inspect all parts for damage or wear.
2. Install new forward clutch piston O-rings.

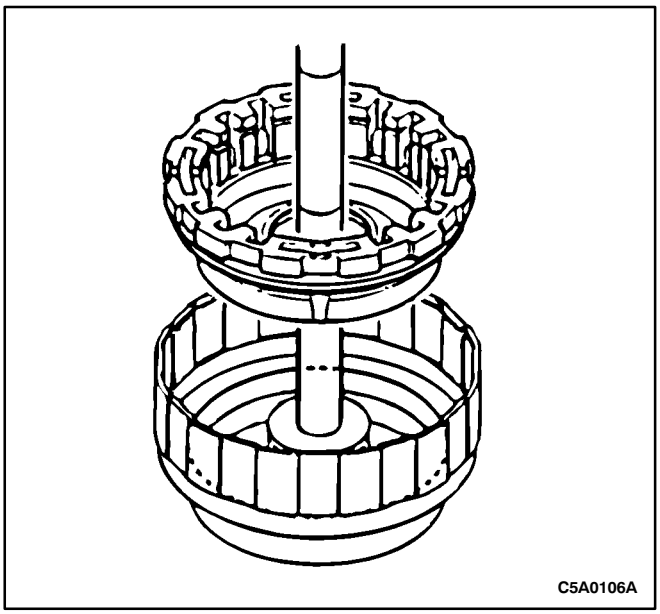

Notice: Apply TOTAL FLUID HX to the new forward clutch piston O-rings and the input shaft seal area.

Notice: Seat the piston by pushing evenly around the circumference of the piston, being careful not to damage the outer seal.

3. Install the forward clutch piston.

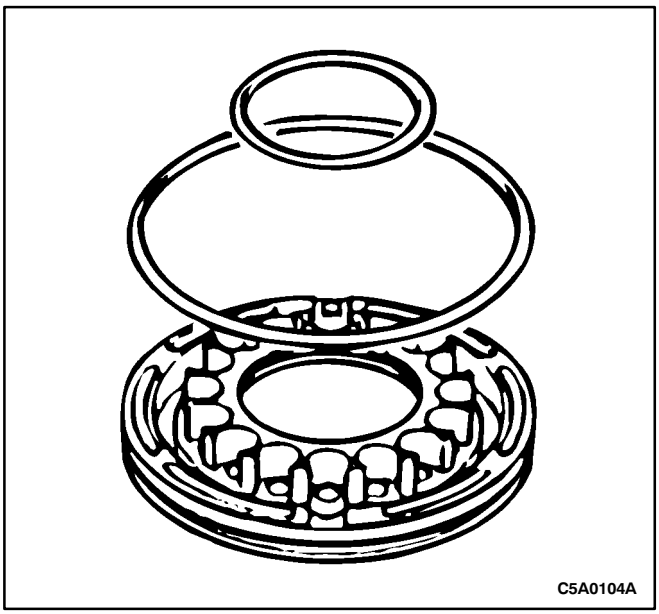

4. Install new direct clutch piston O-rings.

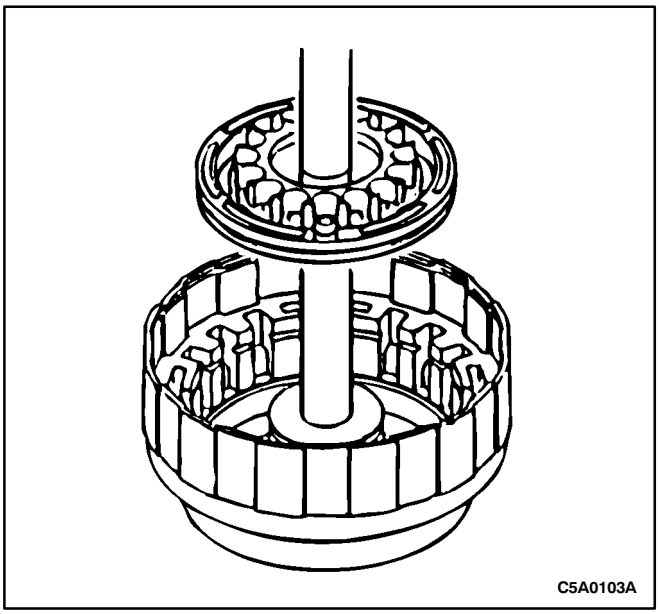

Notice: Apply TOTAL FLUID HX to the new direct clutch piston O-rings and the input shaft seal area.

Notice: Seat the piston by pushing evenly around the circumference of the piston, being careful not to damage the outer seal.

5. Install the direct clutch piston.

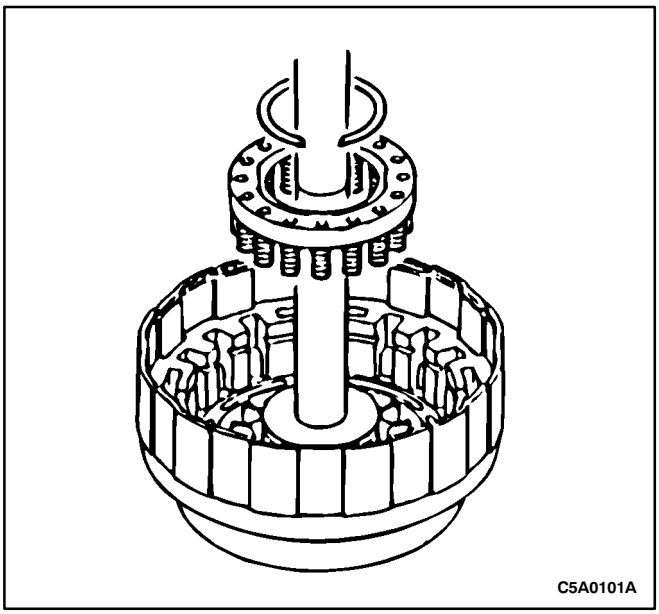

6. Install the clutch piston return spring on the direct clutch piston.

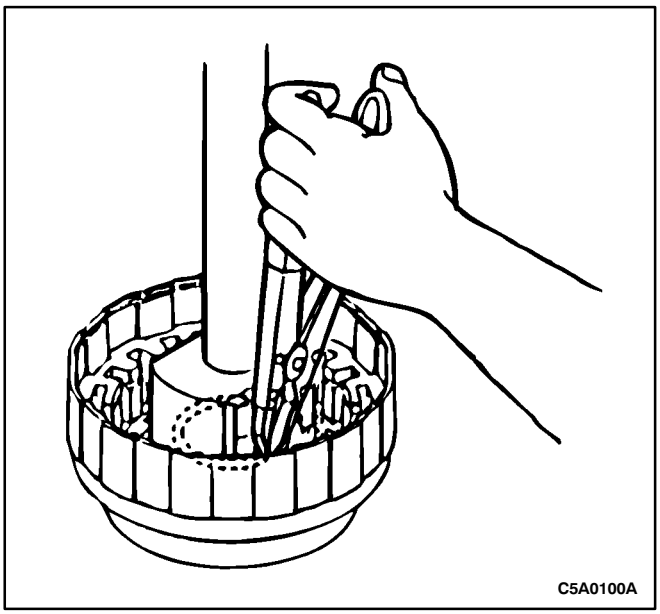

7. Install the clutch piston return spring. Position spring compressor KM-698 on the clutch piston return spring. Using a press, compress the spring, then install the snap ring into the groove.

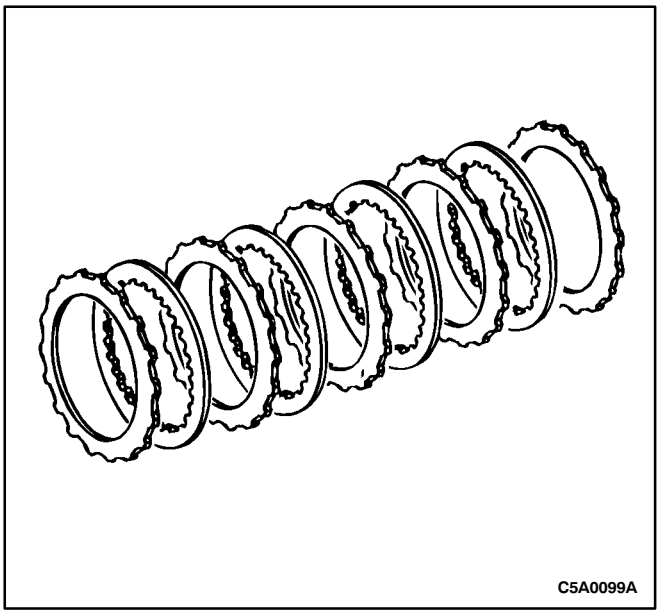

8. Install the direct clutch disc pack and direct clutch pressure plate.
   - The installation order is: steel-friction-steel-friction-steel-friction-steel-friction-pressure plate.

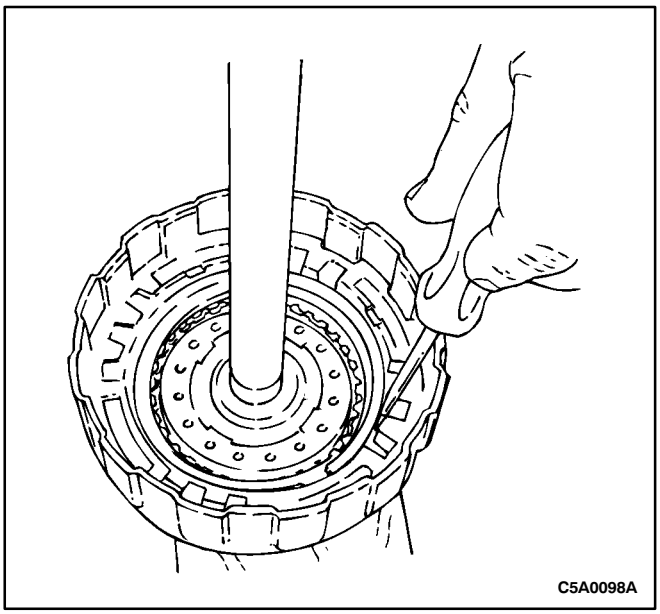

9. Install the snap ring.

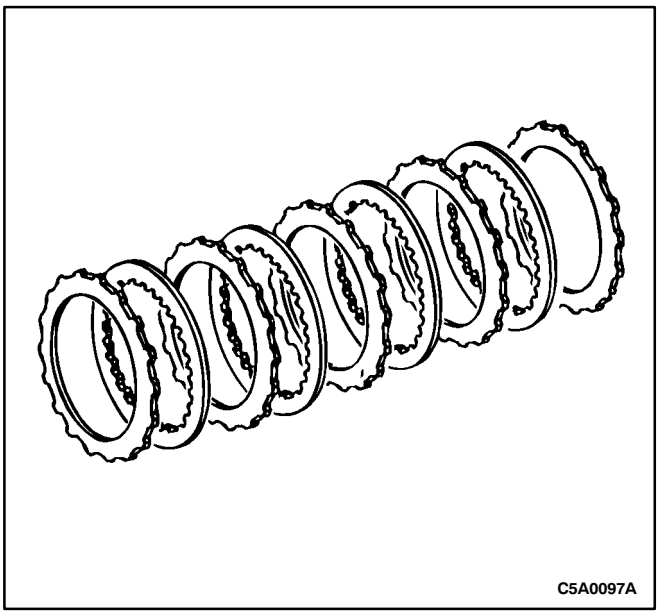

10. Install the forward clutch disc pack and forward clutch pressure plate.
    - The installation order is: steel-friction-steel-friction-steel-friction-steel-friction-pressure plate.

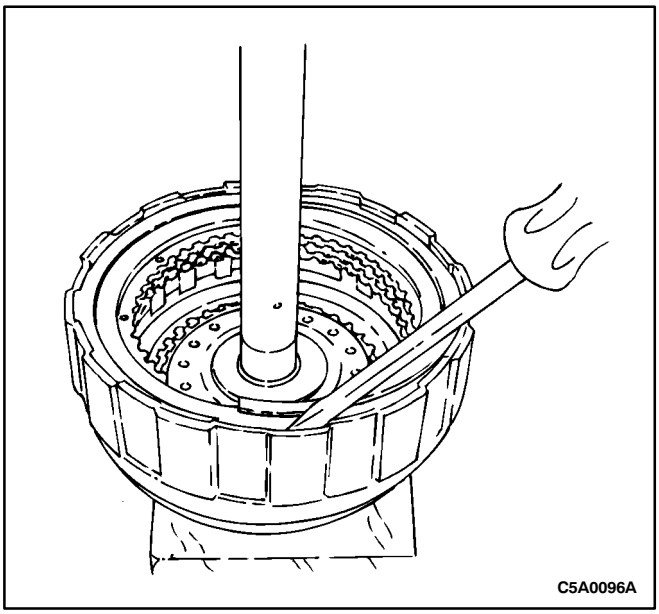

11. Install the snap ring.

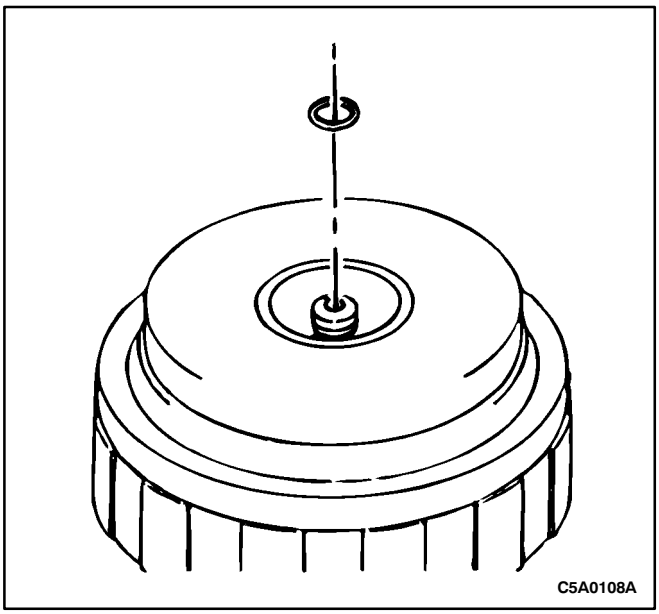

Notice: Apply TOTAL FLUID HX to the seal ring. Spread the seal ring apart and install it into the groove.

12. Install the seal ring.

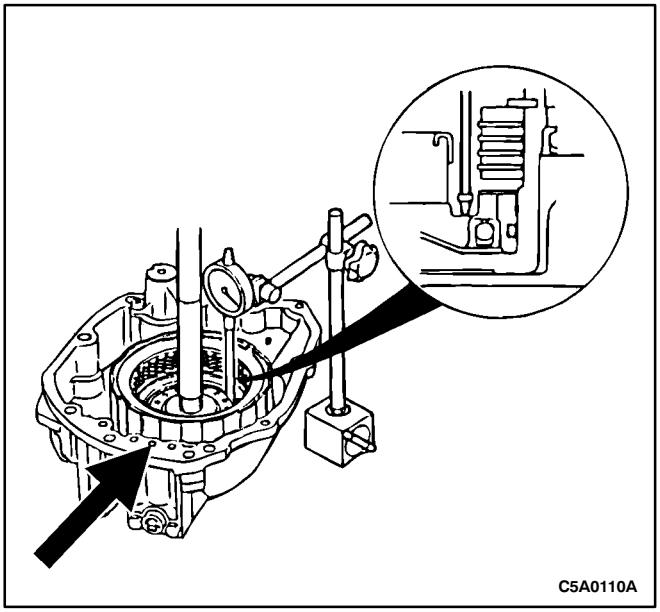

WARNING: USE CAUTION WHEN CHECKING COMPONENTS WITH COMPRESSED AIR OR PERSONAL INJURY MAY RESULT.

13. Check the direct clutch operation.
    - Install the forward and direct clutch assembly into the rear cover. Install a dial indicator.
    - Apply 396 kPa (57 psi) of compressed air into the oil passage and measure the direct clutch piston stroke. The piston stroke is 1.520-1.890 mm (0.059-0.074 in). The clutch should make a solid apply sound, with no whistle or sign of leaks.

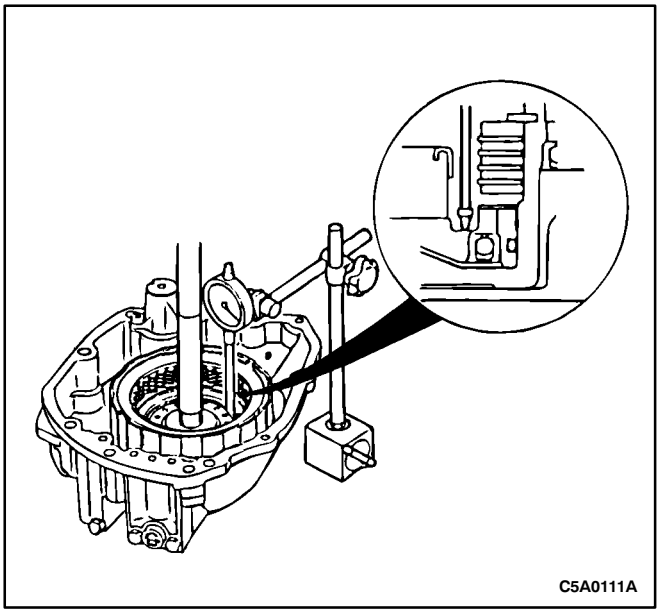

WARNING: USE CAUTION WHEN CHECKING COMPONENTS WITH COMPRESSED AIR OR PERSONAL INJURY MAY RESULT.

14. Check the forward clutch operation.
    - Install the forward and direct clutch assembly into the rear cover. Install a dial indicator.
    - Apply 396 kPa (57 psi) of compressed air into the oil passage and measure the direct clutch piston stroke. The piston stroke is 1.520-1.890 mm (0.059-0.074 in). The clutch should make a solid apply sound, with no whistle or sign of leaks.

PLANETARY GEAR AND PLANETARY SUN GEAR

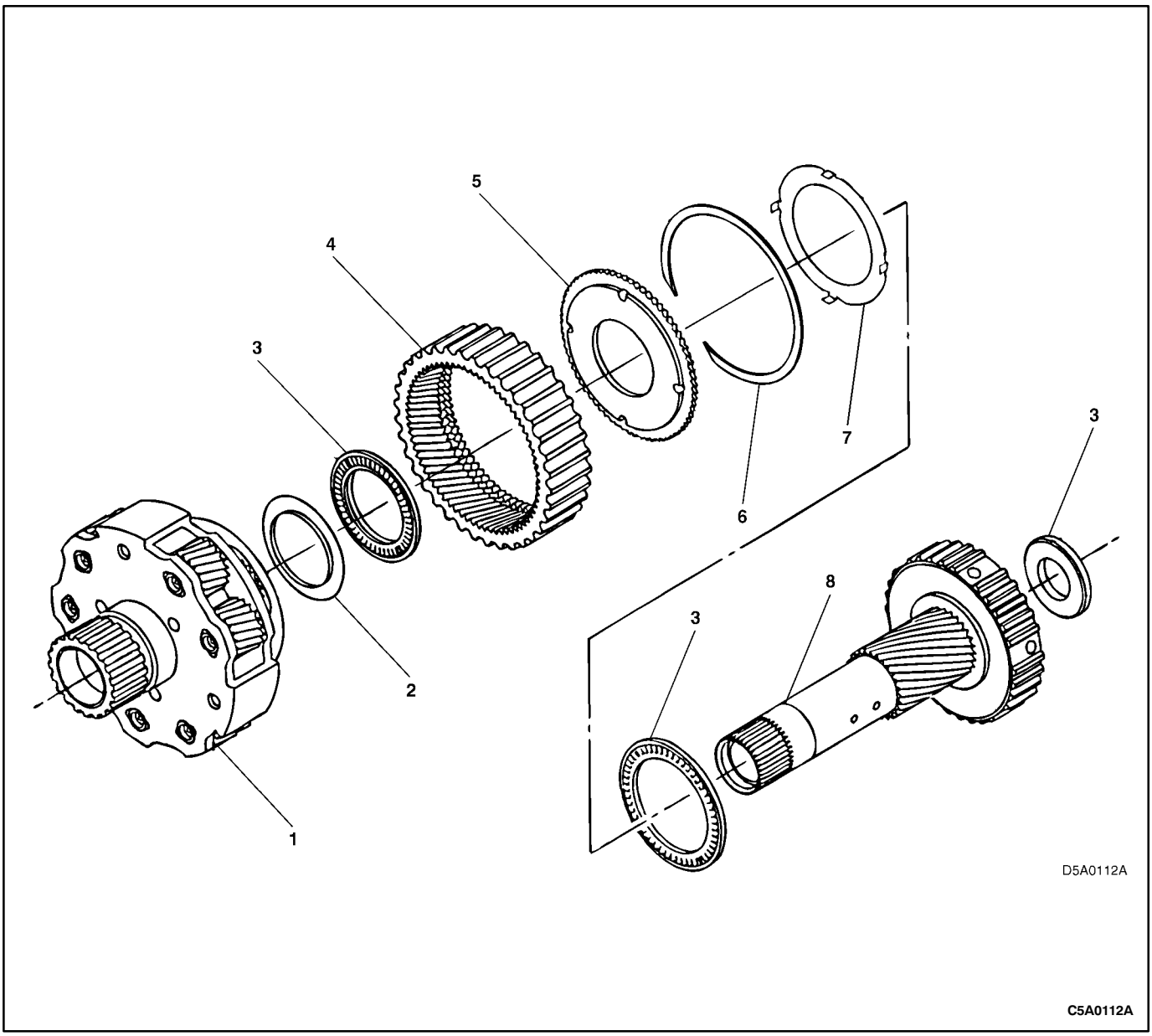

1. Planetary Gear Assembly
2. Thrust Bearing Race
3. Thrust Bearing
4. Rear Planetary Ring Gear
5. Rear Planetary Ring Gear Flange
6. Snap Ring
7. Thrust Bearing Race (Tabbed)
8. Planetary Sun Gear

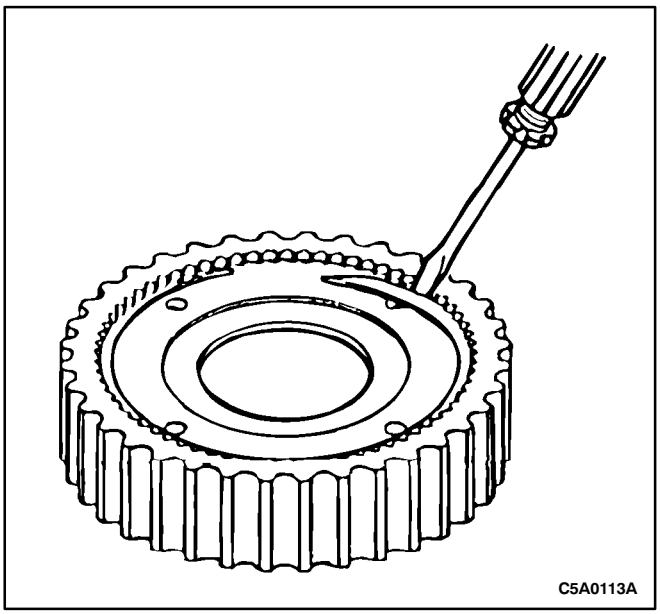

Disassembly Procedure

WARNING: USE CAUTION WHEN REMOVING SNAP RINGS OR PERSONAL INJURY MAY RESULT.

1. Carefully remove the snap ring.

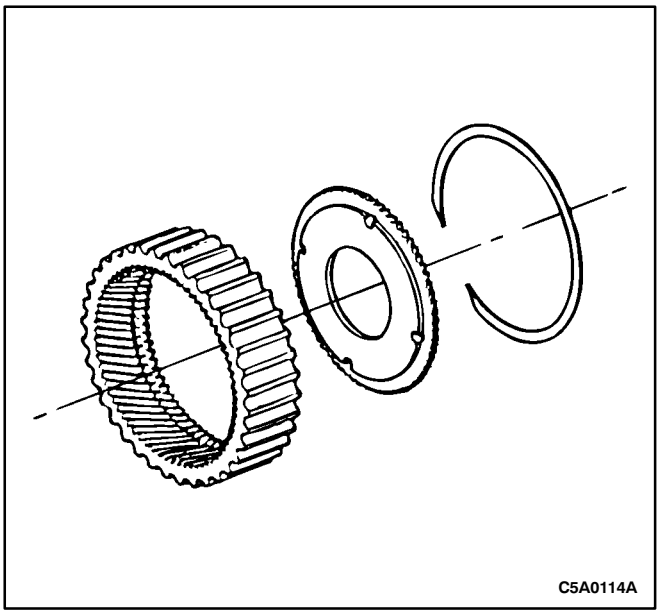

2. Remove the rear planetary ring gear flange.

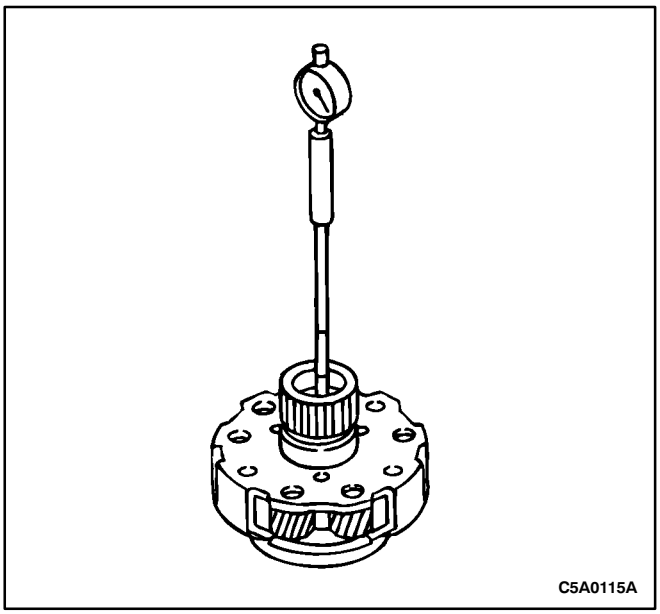

3. Inspect the planetary gear assembly.
   - Using a dial indicator, measure the inner diameter of the planetary gear bushing. Measure the bushing at three different places and calculate the average. If it is greater than the maximum, replace the planetary gear assembly.

Standard	30.00-30.030 mm (1.181-1.182 in)
Maximum	30.080 mm (1.184 in)

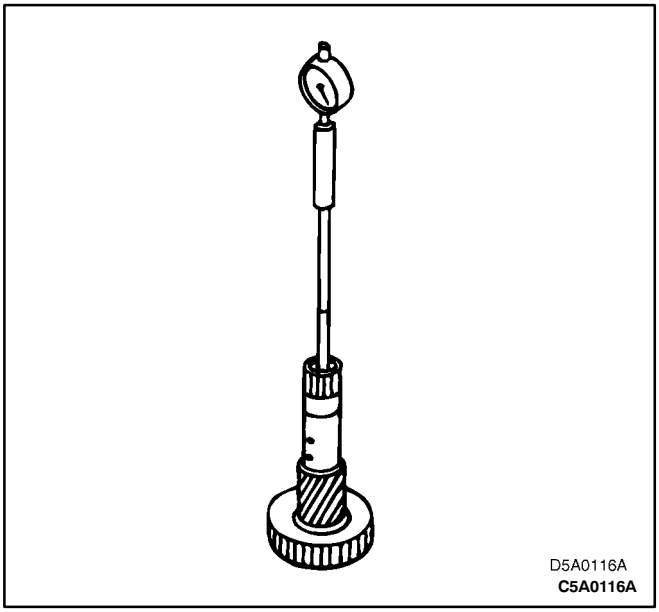

4. Inspect the planetary sun gear.
   - Using a dial indicator, measure the inner diameter of the planetary sun gear bushing. Measure the bushing at three different places and calculate the average. If it is greater than the maximum, replace the planetary sun gear.

Standard	21.50-21.530 mm (0.846-0.847 in)
Maximum	21.580 mm (0.849 in)

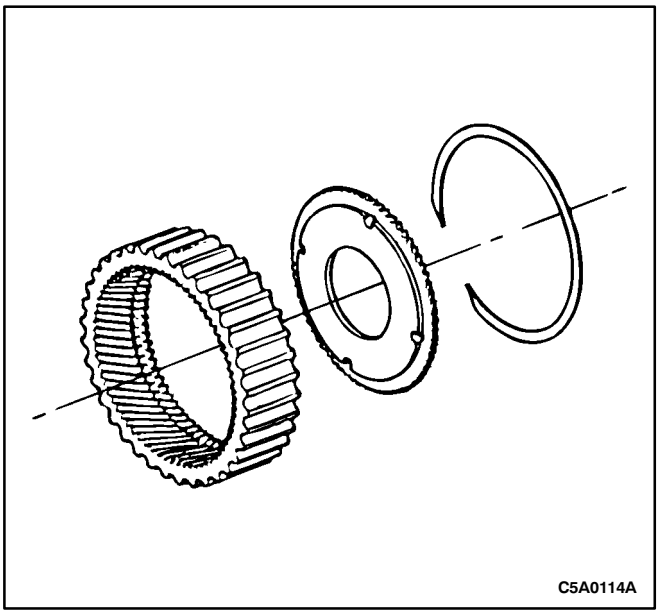

Assembly Procedure

1. Clean the components using a clean, high-quality parts cleaning solvent and use compressed air to dry all parts. Inspect all parts for damage or wear.
2. Install the rear planetary ring gear flange.

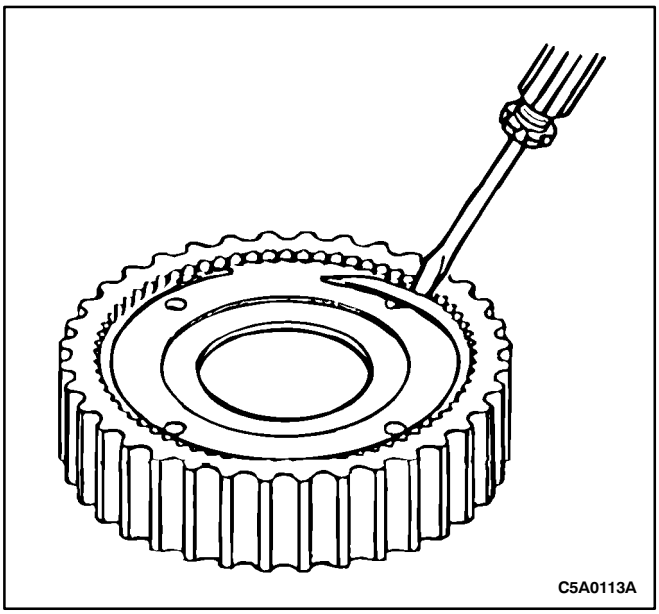

3. Install the snap ring.

LOW/REVERSE BRAKE CLUTCH PISTON ASSEMBLY, FRONT PLANETARY RING GEAR AND ONE-WAY CLUTCH

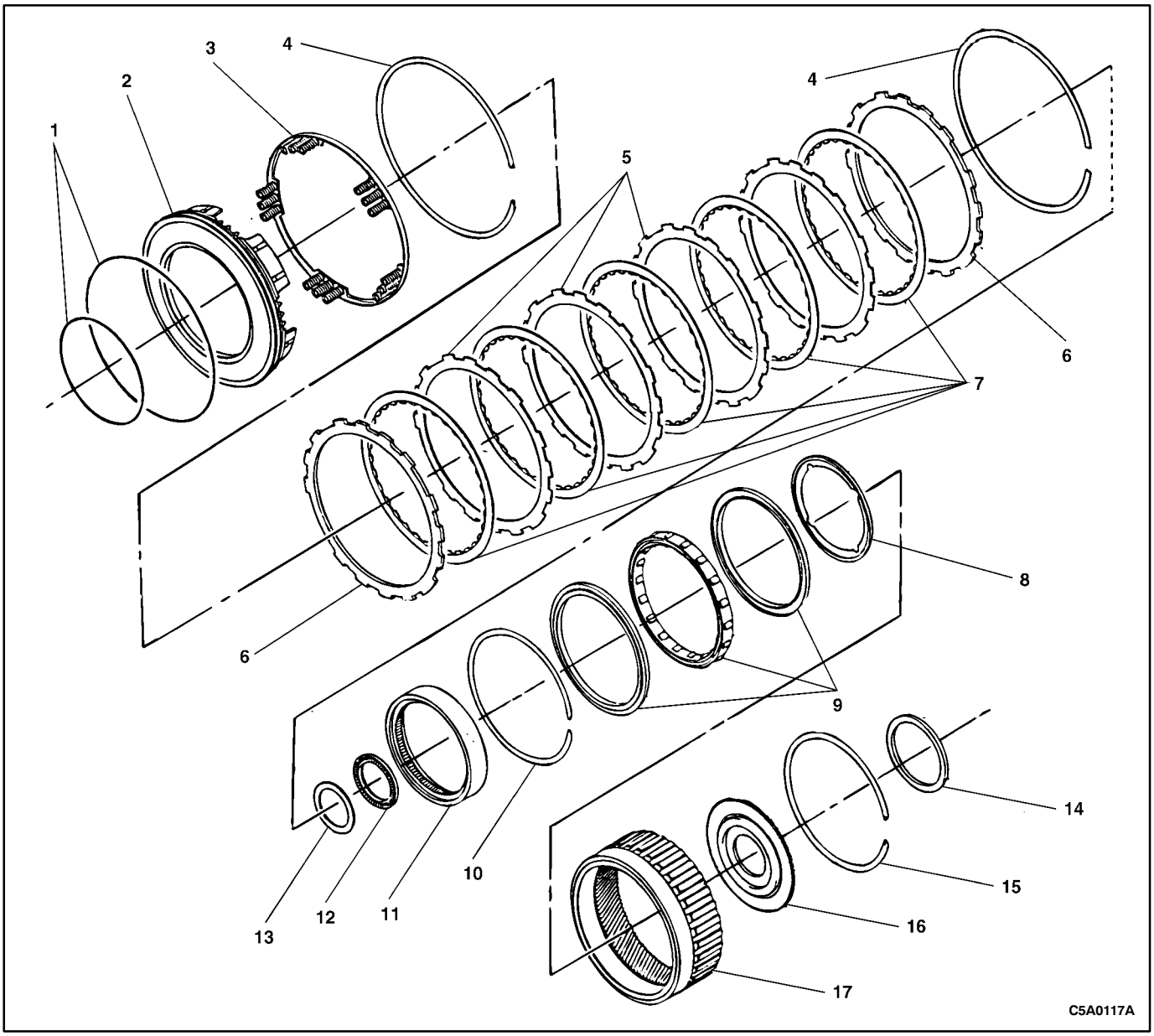

1. O-Ring
2. Low/Reverse Brake Piston
3. Brake Piston Return Spring
4. Snap Ring
5. Clutch Steel Plate
6. Clutch Pressure Plate
7. Clutch Friction Plate
8. Thrust Washer
9. One-Way Clutch
10. Snap Ring
11. One-Way Clutch Inner Race
12. Thrust Bearing
13. Thrust Bearing Race
14. Thrust Bearing
15. Snap Ring
16. Front Planetary Ring Gear Flange
17. Low/Reverse Planetary Ring Gear

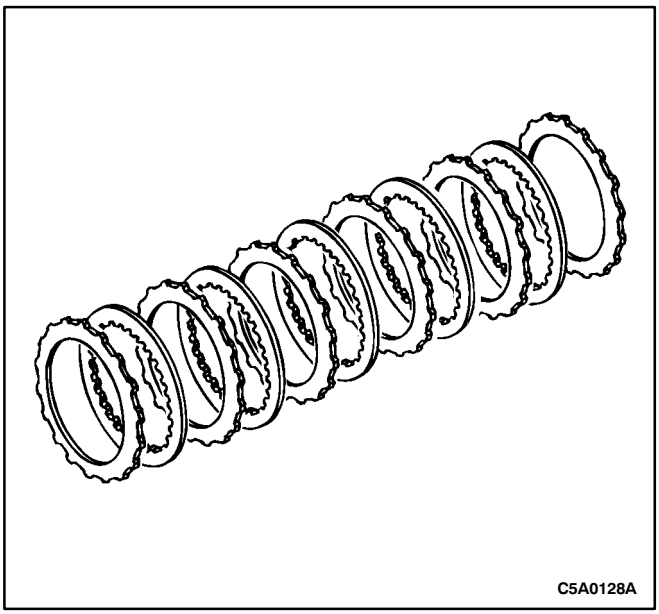

Disassembly Procedure

1. Remove the low/reverse clutch pack and the clutch pressure plates from the planetary ring gear.

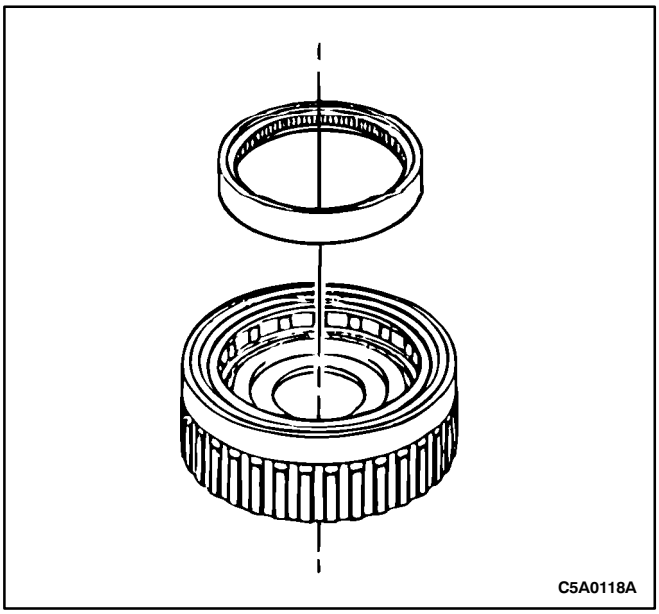

2. Remove the one-way clutch inner race.

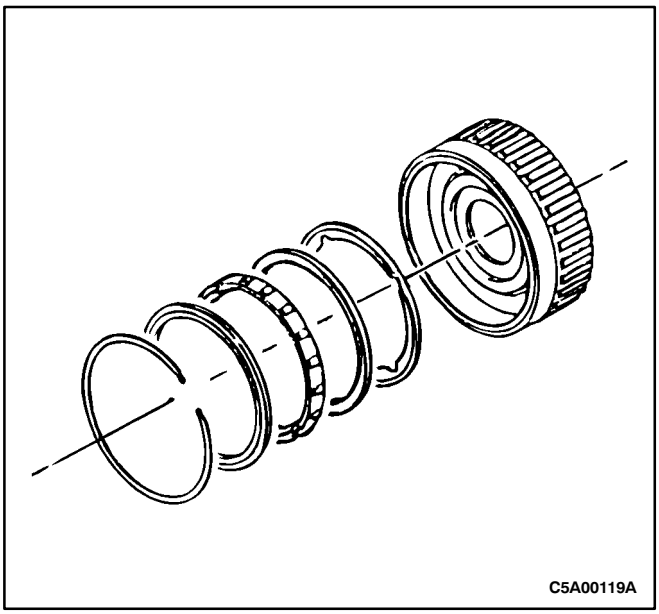

3. Remove the snap ring, one-way clutch and thrust washer.

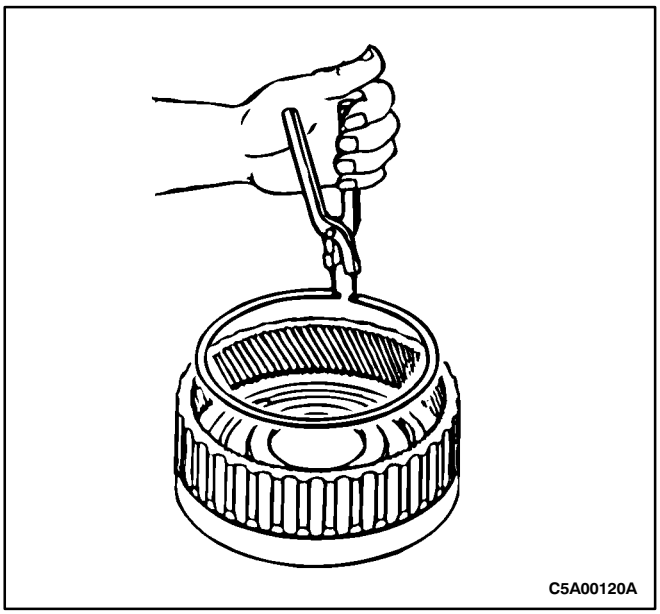

4. Remove the snap ring.

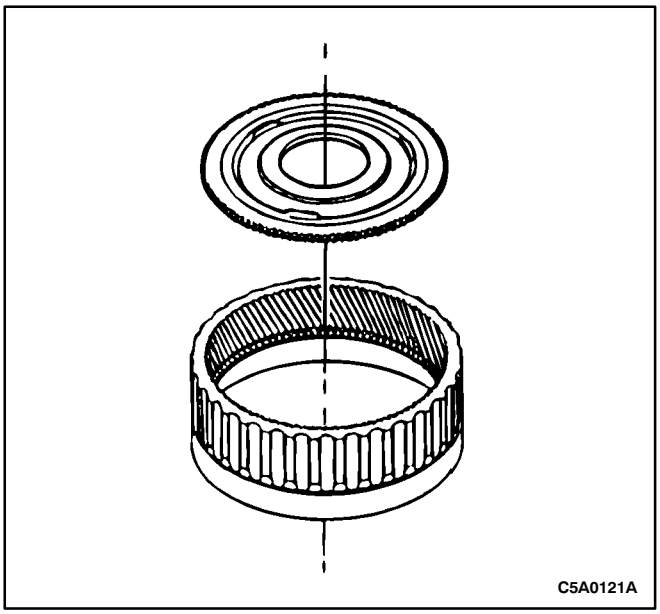

5. Remove the front planetary ring gear flange.

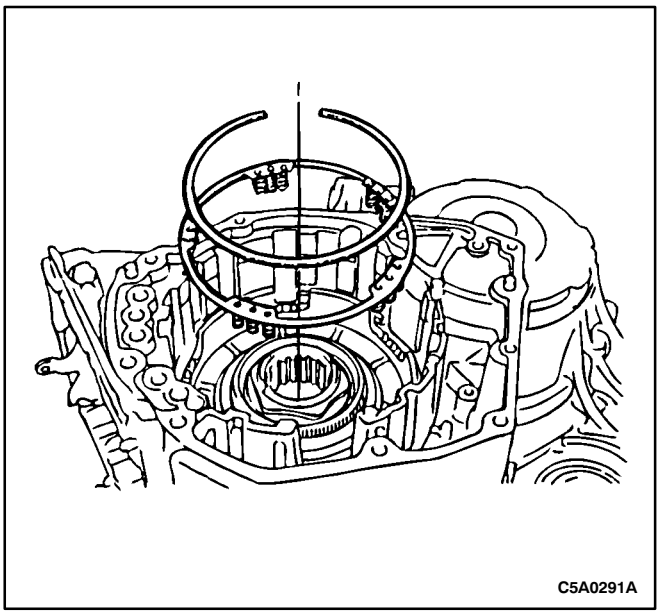

WARNING: USE CAUTION WHEN REMOVING SNAP RINGS OR PERSONAL INJURY MAY RESULT.

6. Remove the snap ring and the brake piston return spring.

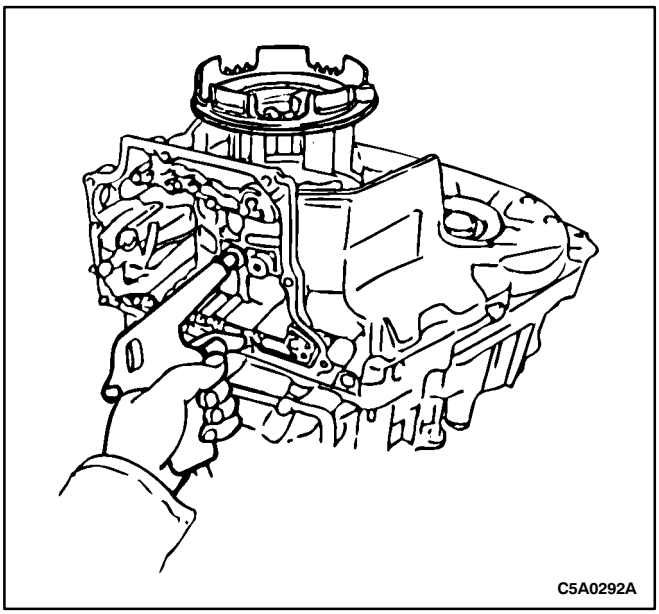

WARNING: USE CAUTION WHEN REMOVING COMPONENTS WITH COMPRESSED AIR OR PERSONAL INJURY MAY RESULT.

Notice: If the piston does not come out completely, use needlenose pliers to remove.

7. Apply 396 kPa (57 psi) of compressed air into the oil passage to remove the low/reverse brake piston.

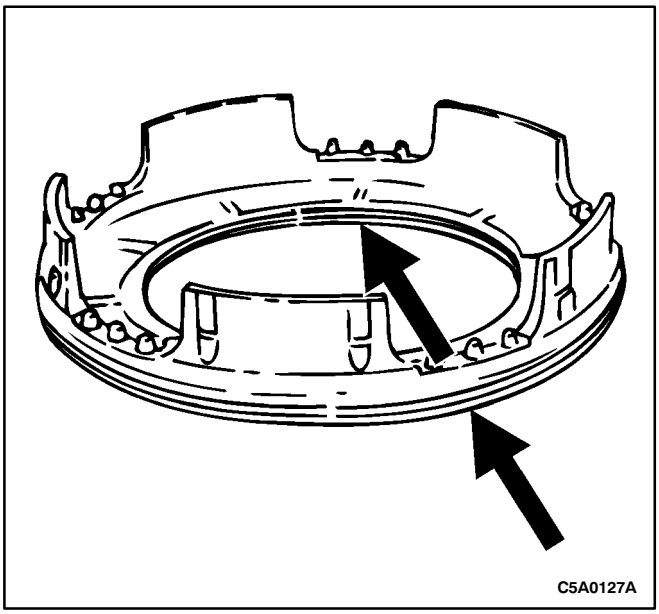

8. Remove and discard the low/reverse brake piston O-rings.

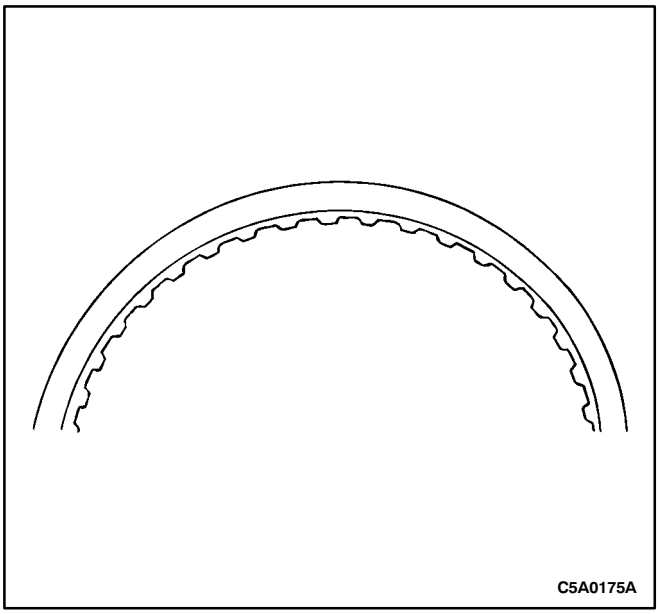

Notice: Check the steel and friction plates for wear or damage. Replace as necessary.

Notice: New clutch plates should be soaked in TOTAL FLUID HX for two hours before being assembled.

9. Inspect the clutch steel and friction plate surfaces.

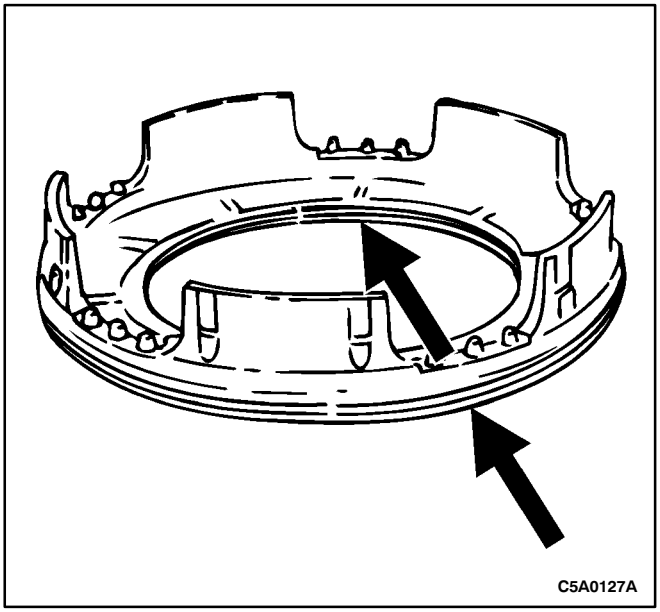

Assembly Procedure

Notice: Inspect the transaxle case for damage or wear.

Notice: Inspect all parts for damage or wear.

Notice: Check the low/reverse clutch piston and transaxle case seal area for burrs or damage.

1. Clean the components using a clean, high-quality parts cleaning solvent and use compressed air to dry all parts and clean the fluid passages.
2. Install new low/reverse brake piston O-rings.

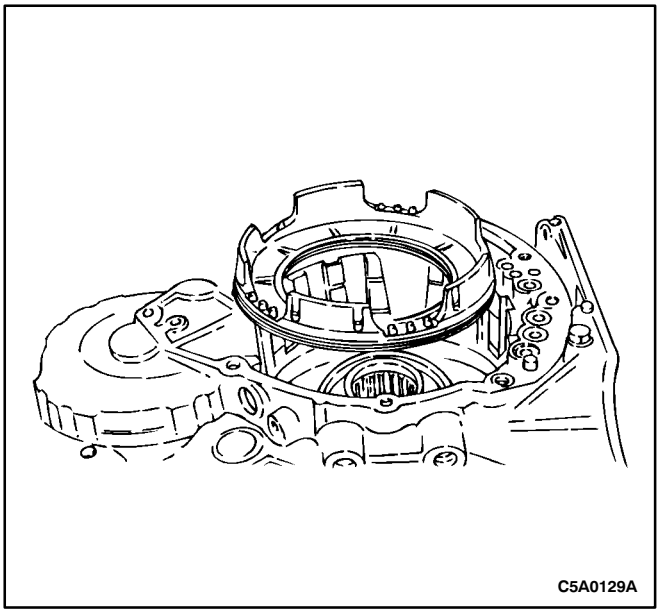

Notice: Apply TOTAL FLUID HX to the new low/reverse brake piston O-rings and the transaxle seal area.

Notice: Seat the piston by pushing evenly around the circumference of the piston, being careful not to damage the outer seal.

3. Install the low/reverse brake piston into the case.

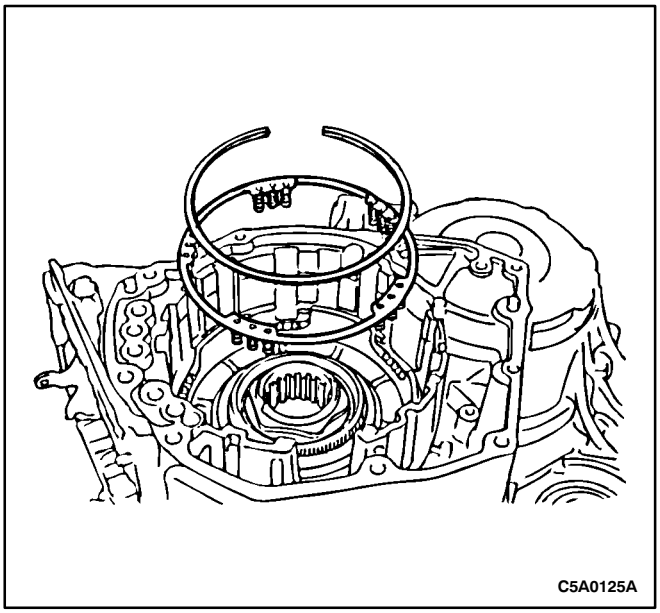

4. Install the brake piston return spring and snap ring into the case.
   - Compress the brake piston return spring by hand and install the snap ring into the groove with a screwdriver.
   - Be sure the end gap of the snap ring is not aligned with one of the case cutouts.

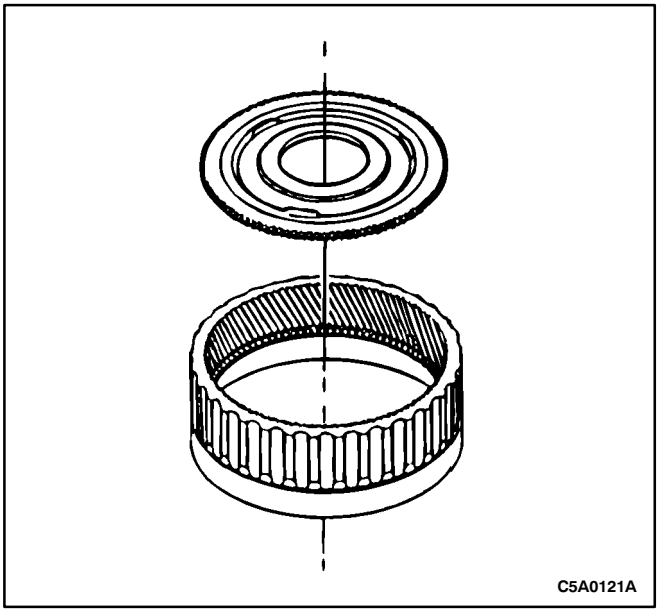

5. Install the front planetary ring gear flange.

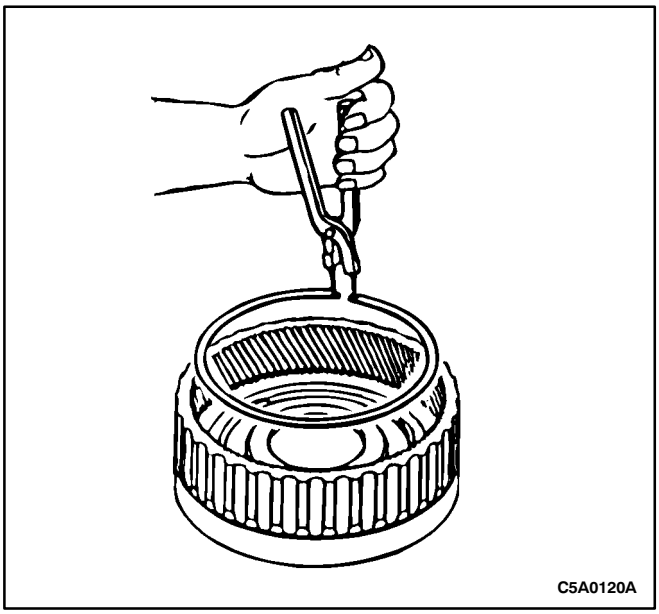

6. Install the snap ring.

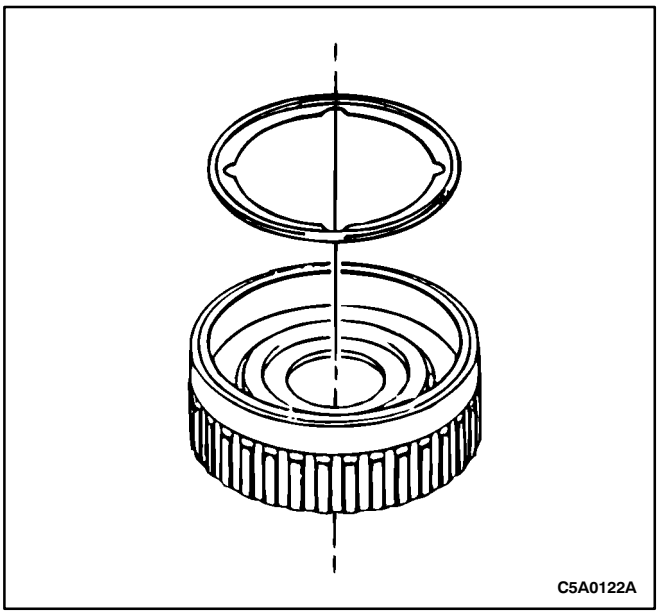

Notice: Install the flat surface of the thrust washer toward the flange.

7. Install the thrust washer.

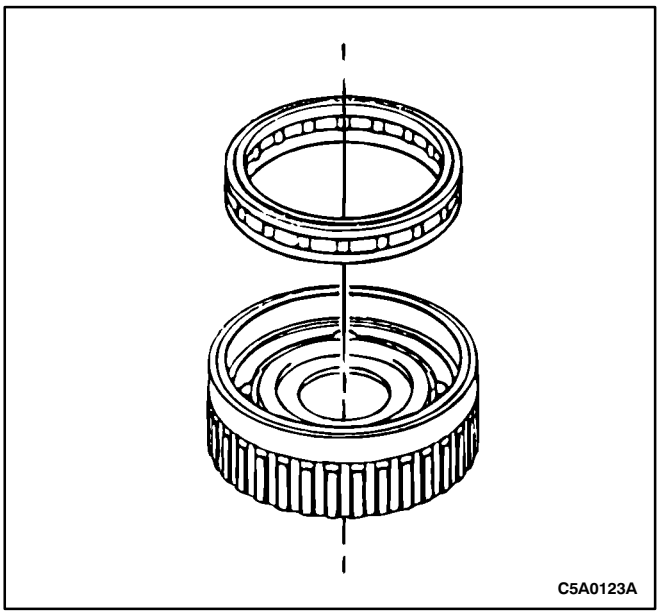

Notice: Apply TOTAL FLUID HX to the one-way clutch.

8. Install the one-way clutch.

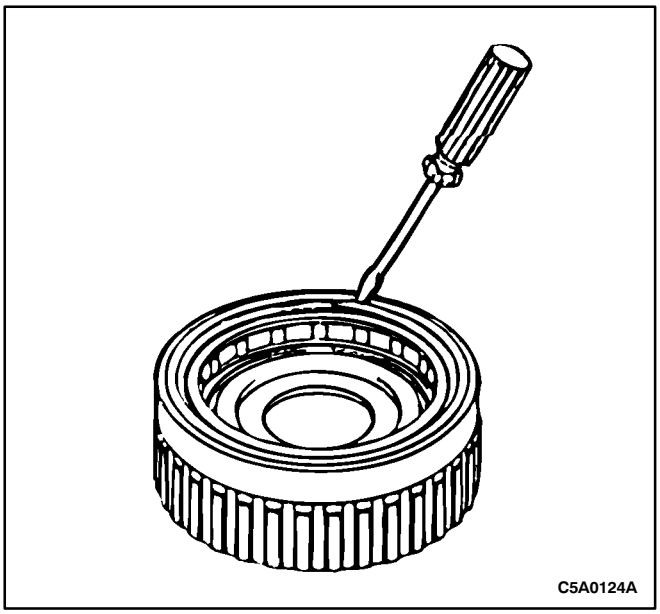

9. Install the snap ring.

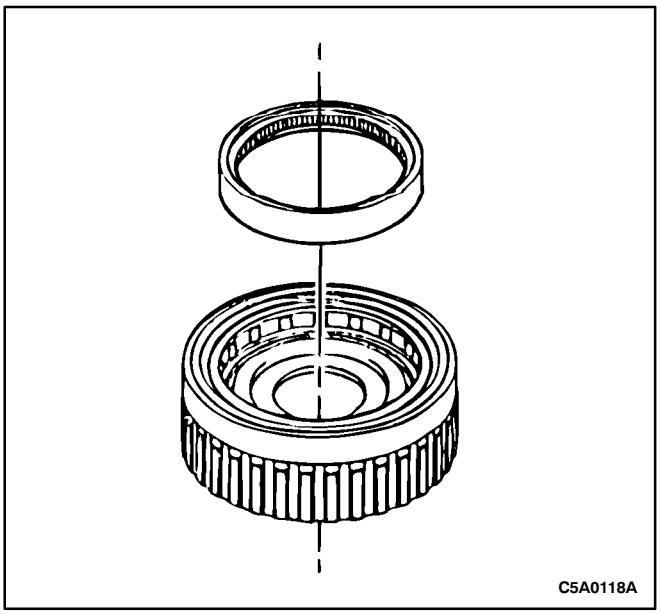

Notice: Apply TOTAL FLUID HX to the one-way clutch inner race.

10. Install the one-way clutch inner race.
11. Verify the operation of the one-way clutch. While holding the front ring gear, verify that the inner race rotates smoothly when turned counterclockwise and locks when turned clockwise.

UNDERDRIVE CLUTCH

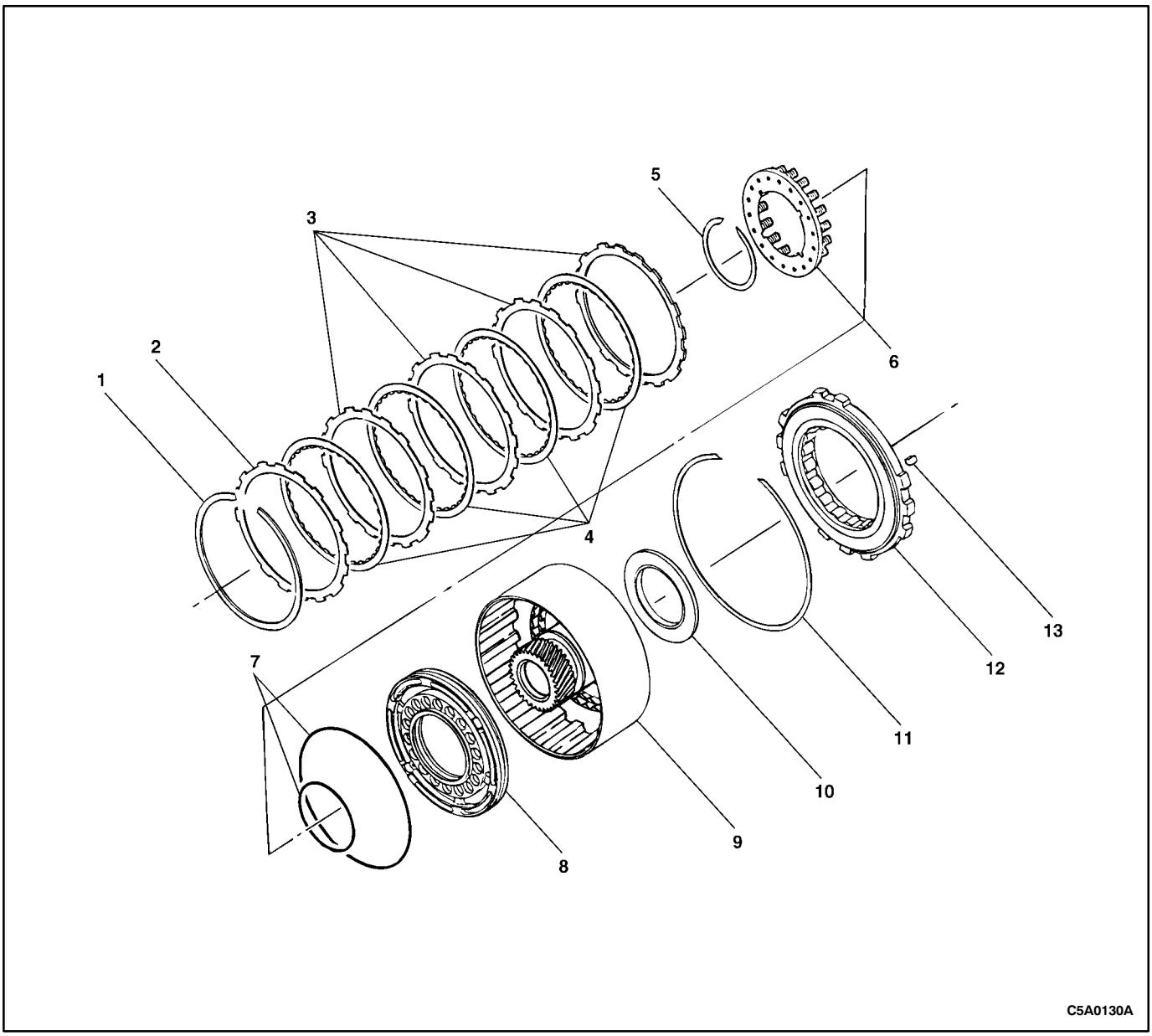

1. Snap Ring
2. Clutch Pressure Plate
3. Clutch Steel Plates
4. Clutch Friction Plates
5. Shaft Snap Ring
6. Clutch Piston Return Spring
7. O-Rings
8. Underdrive Clutch Piston
9. Underdrive Drum
10. Thrust Bearing
11. Snap Ring
12. Underdrive One-Way Clutch
13. Outer Race Retainer

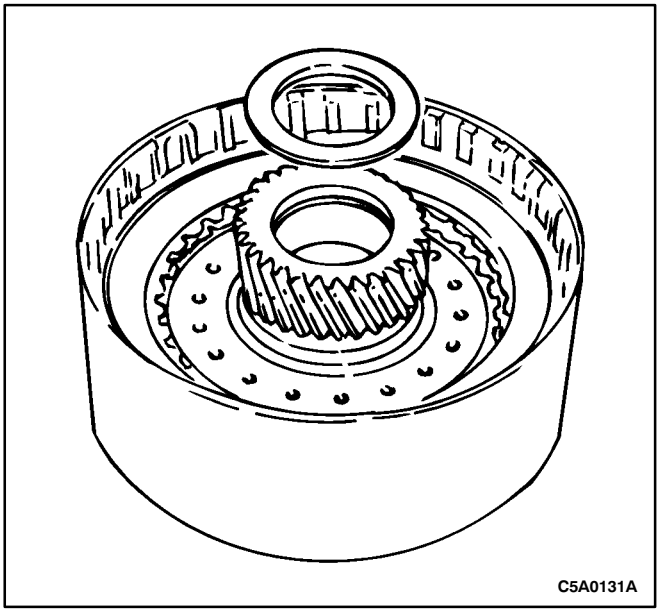

Tools Required

KM-698 Spring Compressor

Disassembly Procedure

1. Remove the thrust washer.

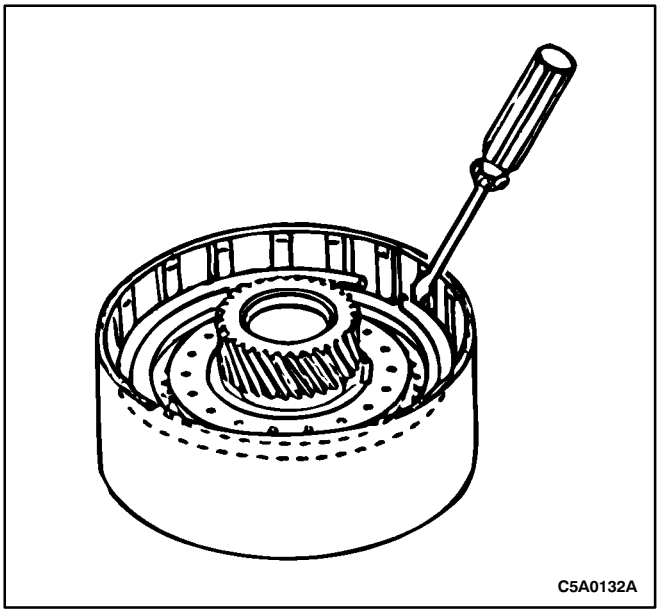

WARNING: USE CAUTION WHEN REMOVING SNAP RINGS OR PERSONAL INJURY MAY RESULT.

2. Carefully remove the snap ring.

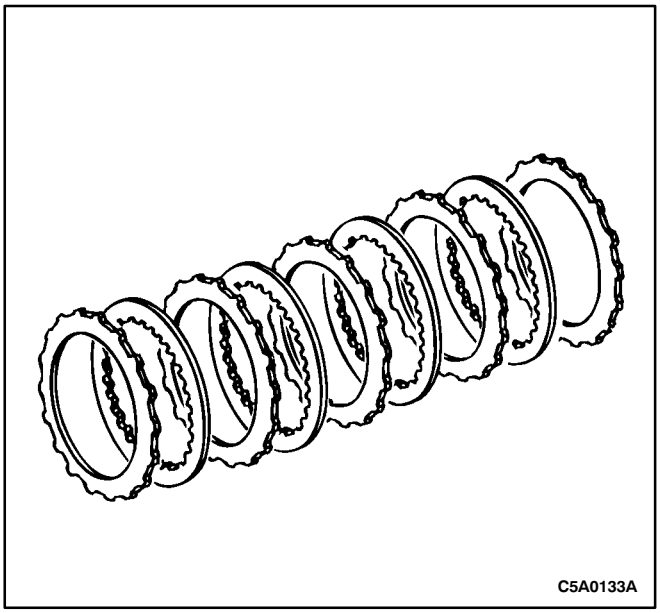

3. Remove the underdrive clutch pack.

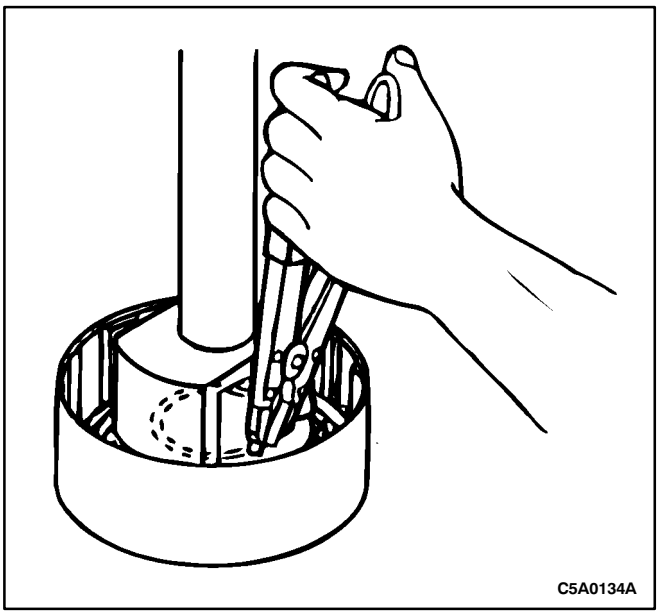

4. Position spring compressor KM-698 on the clutch piston return spring. Using a press, compress the springs, then remove the snap ring from the groove.

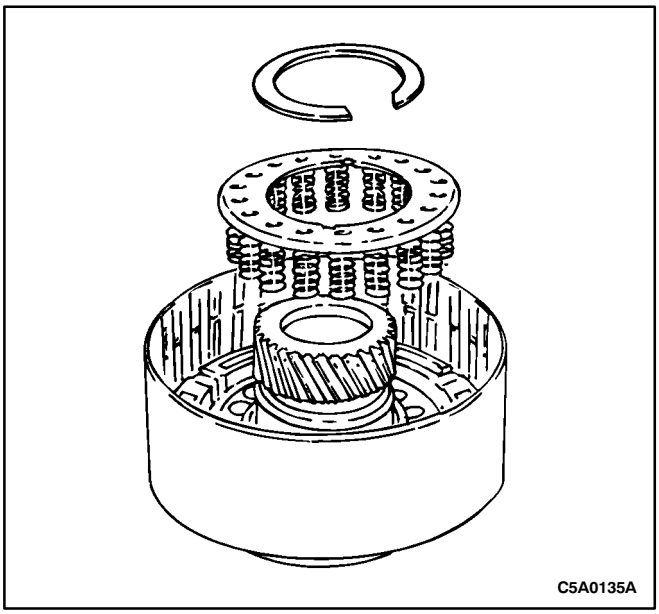

5. Remove the snap ring and the clutch piston return spring.

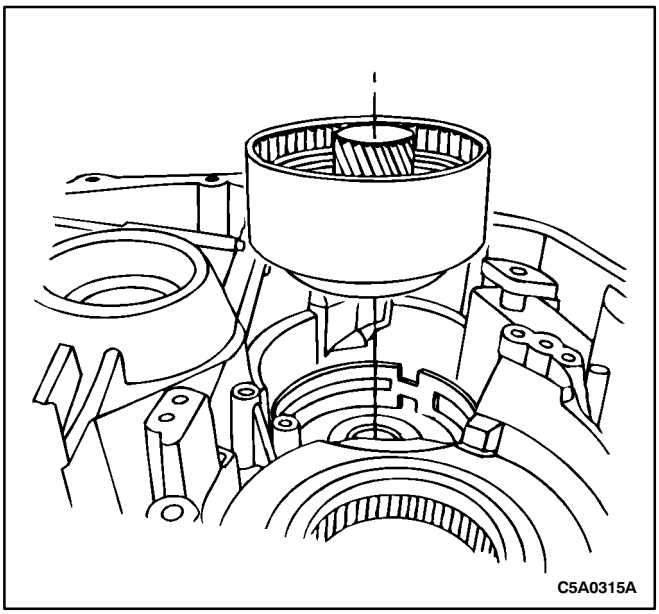

6. Install the underdrive drum into the transaxle case.

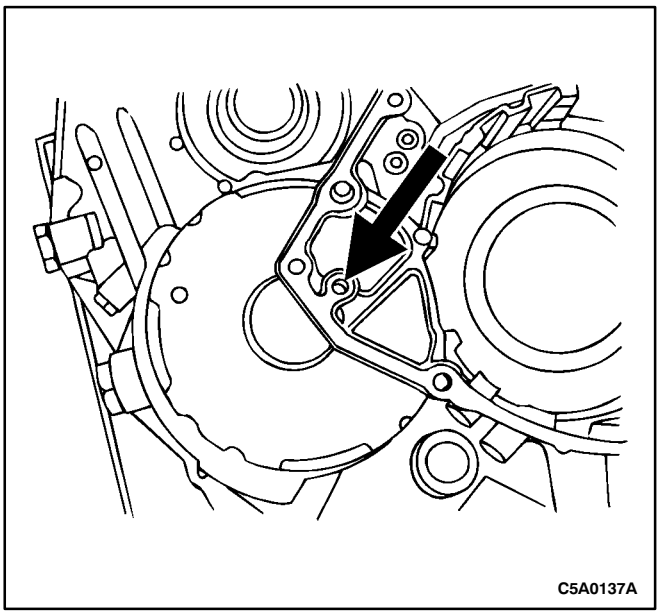

WARNING: USE CAUTION WHEN REMOVING COMPONENTS WITH COMPRESSED AIR OR PERSONAL INJURY MAY RESULT.

Notice: If the piston does not come out completely, use needlenose pliers to remove.

7. Apply 396 kPa (57 psi) of compressed air into the oil passage to remove the underdrive clutch piston.

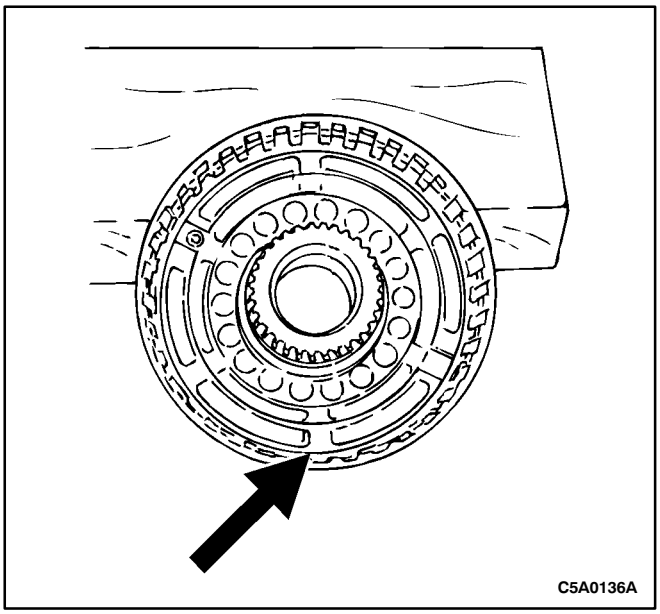

8. Remove the underdrive clutch piston.

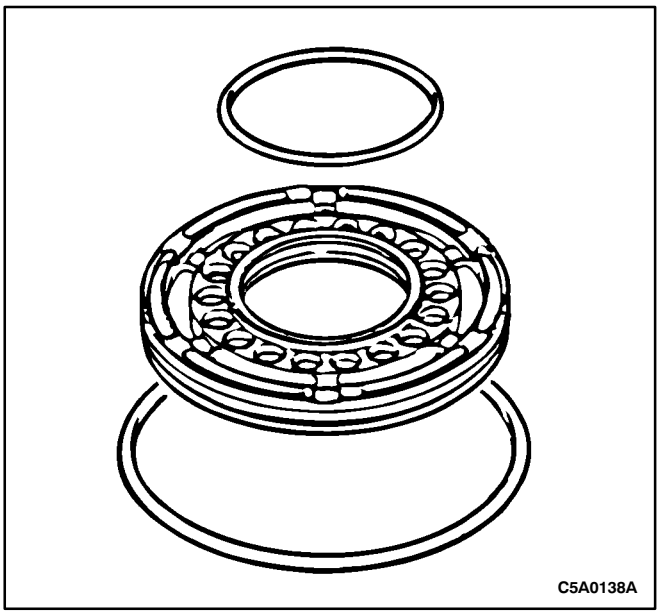

9. Remove and discard the underdrive clutch piston O-rings.

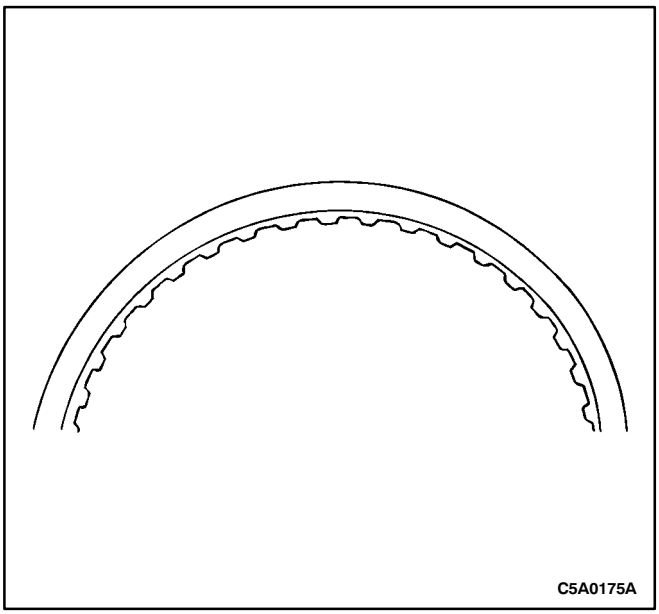

Notice: Check the steel and friction plates for wear or damage. Replace as necessary.

Notice: New clutch plates should be soaked in TOTAL FLUID HX for two hours before being assembled.

10. Inspect the clutch steel and friction plate surfaces.

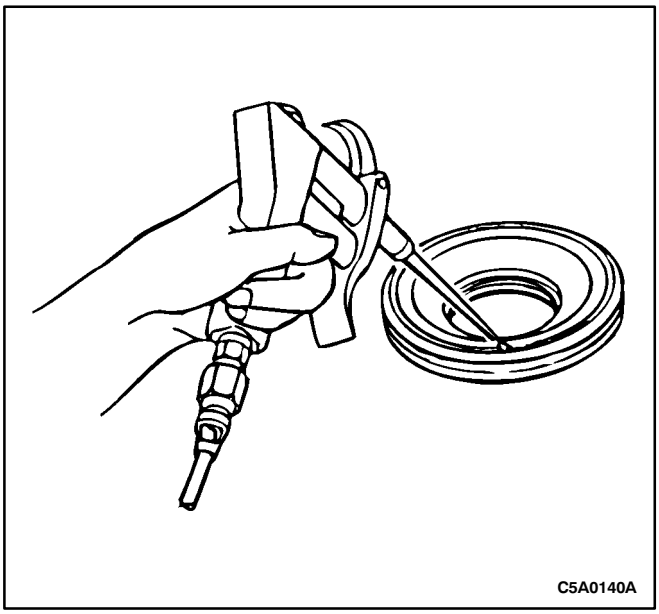

WARNING: USE CAUTION WHEN CHECKING COMPONENTS WITH COMPRESSED AIR OR PERSONAL INJURY MAY RESULT.

11. Inspect the underdrive clutch piston.
    - Check that the valve does not leak by applying low-pressure compressed air.

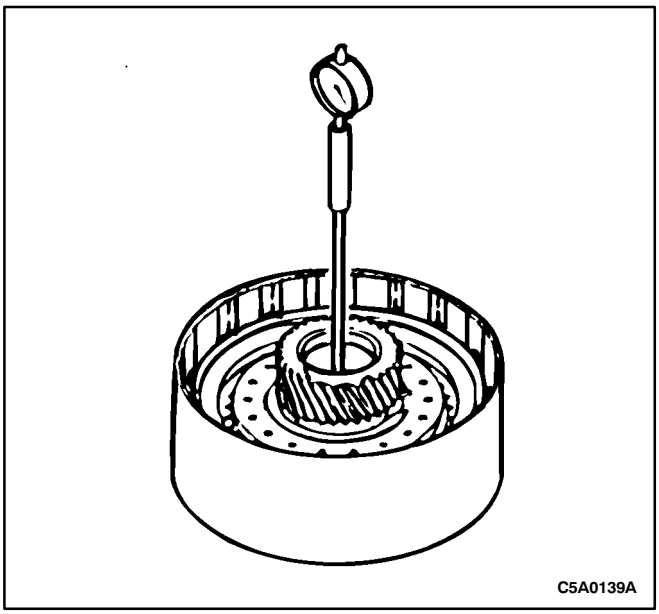

12. Inspect the underdrive drum.
    - Using a dial indicator, measure the inner diameter of the underdrive drum bushing. Measure the bushing at three different places and calculate the average. If it is greater than the maximum, replace the underdrive drum.

	Standard	Maximum
Front	28.5-28.525 mm (1.122-1.123 in)	28.570 mm (1.124 in)
Rear	28.5-28.525 mm (1.122-1.123 in)	28.570 mm (1.124 in)

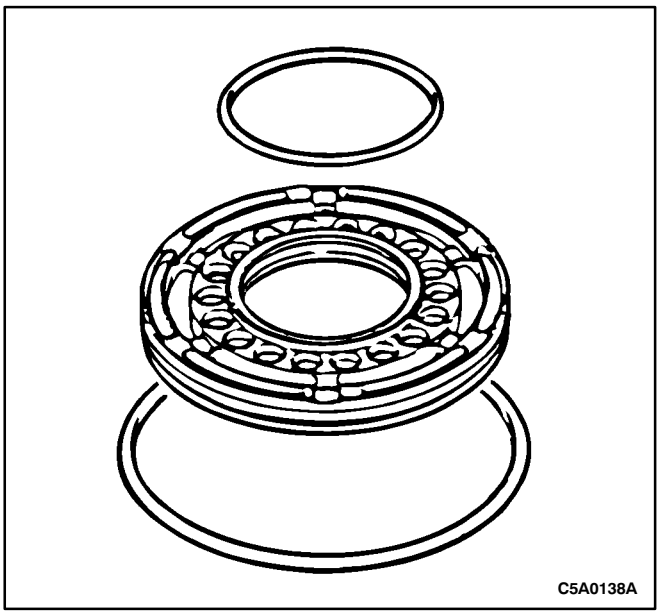

Assembly Procedure

1. Clean the components using a clean, high-quality parts cleaning solvent and use compressed air to dry all parts. Inspect all parts for damage or wear.
2. Install new underdrive clutch piston O-rings.

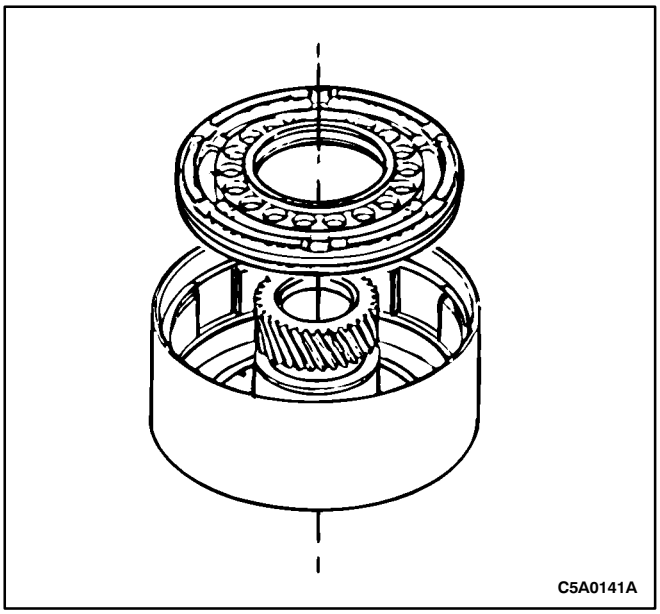

Notice: Apply TOTAL FLUID HX to the new underdrive clutch piston O-rings and the drum seal area.

Notice: Seat the piston by pushing evenly around the circumference of the piston, being careful not to damage the outer seal.

3. Install the underdrive clutch piston into the underdrive drum.

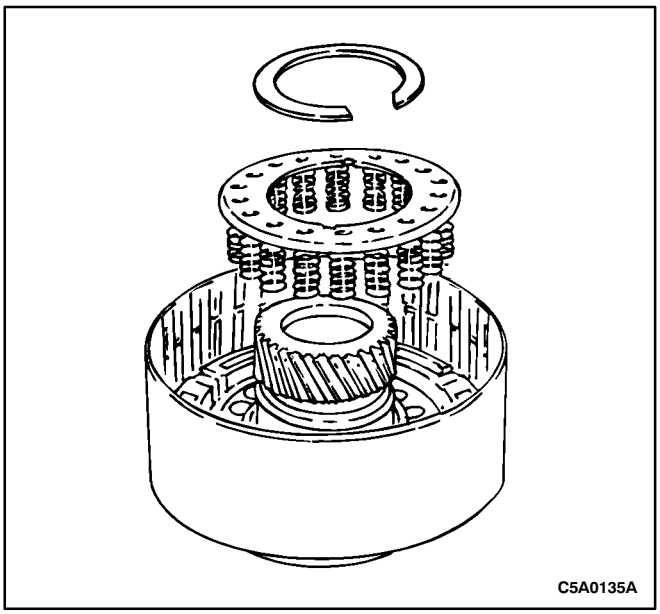

4. Install the clutch piston return spring on the underdrive piston.

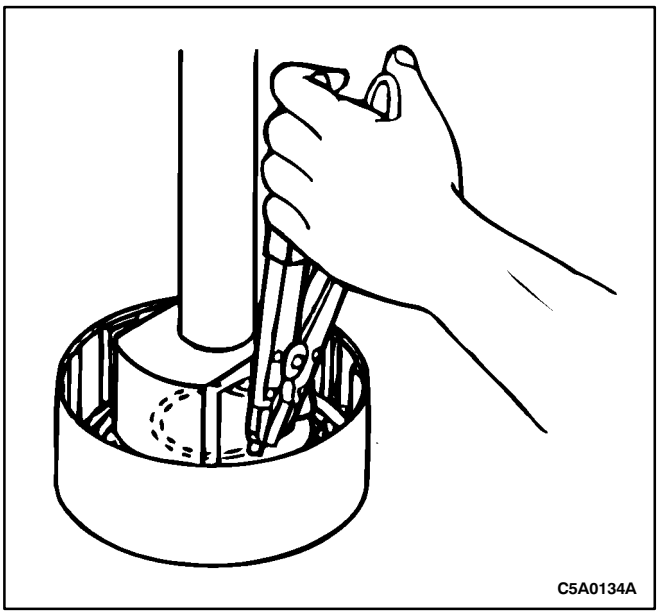

5. Position spring compressor KM-698 on the clutch piston return spring. Using a press, compress the springs, then install the snap ring into the groove.

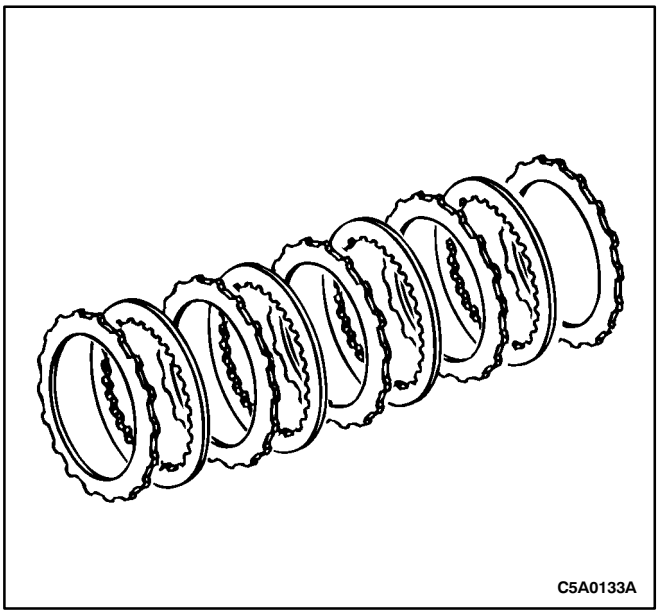

6. Install the underdrive clutch pack and the clutch pressure plate.
   - The installation order is: steel-friction-steel-friction-steel-friction-steel-friction
   - Install the pressure plate with the flat end facing upward.

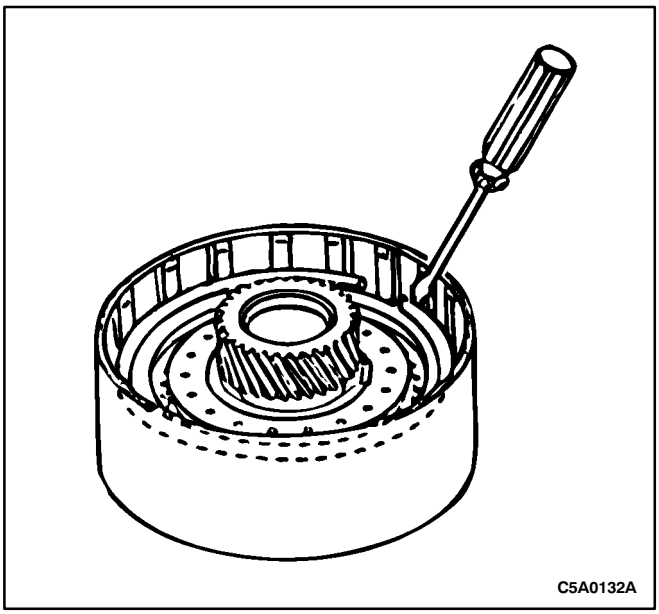

7. Install the snap ring into the groove.

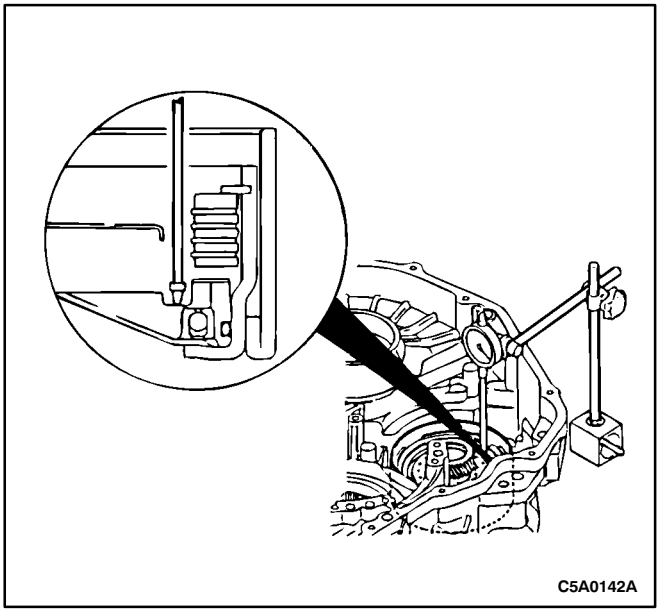

8. Check the underdrive clutch operation.
   - Install the underdrive clutch assembly into the transaxle case.
   - Install a dial indicator.

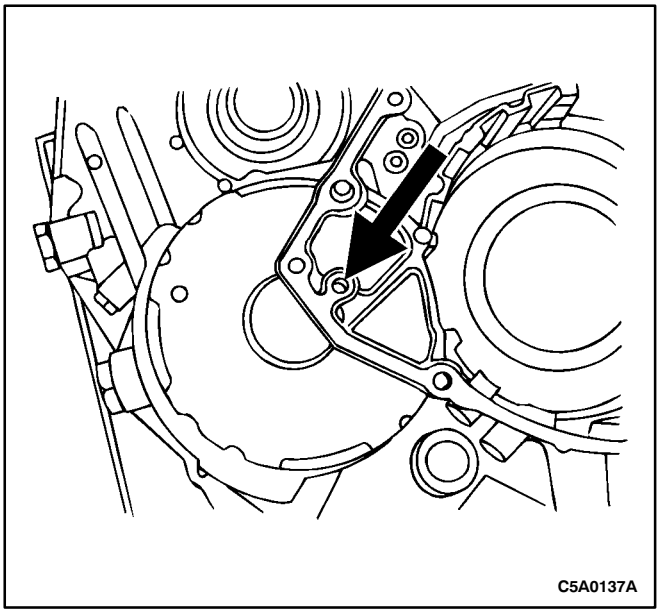

WARNING: USE CAUTION WHEN CHECKING COMPONENTS WITH COMPRESSED AIR OR PERSONAL INJURY MAY RESULT.

9. Apply 396 kPa (57 psi) of compressed air into the oil passage shown. Measure the underdrive clutch piston stroke.
   - The piston stroke is 1.52-1.890 mm (.060-.074 in). The clutch should make a solid apply sound, with no whistle or sign of leaks.

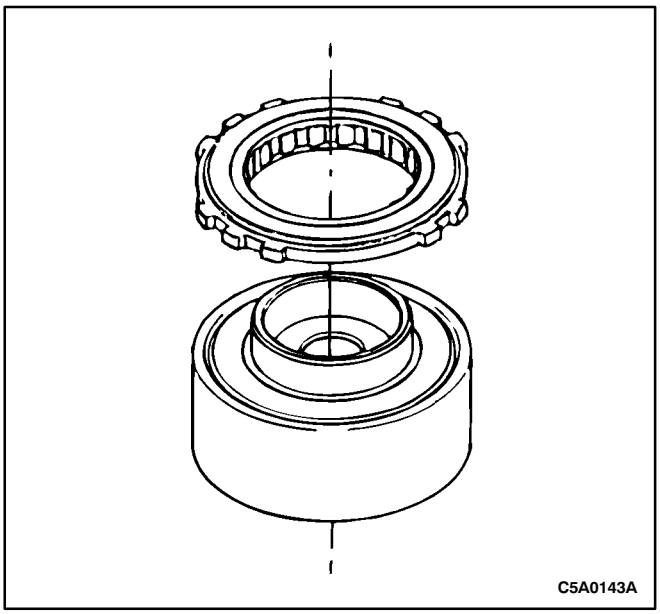

10. Install the one-way clutch onto the underdrive clutch drum.

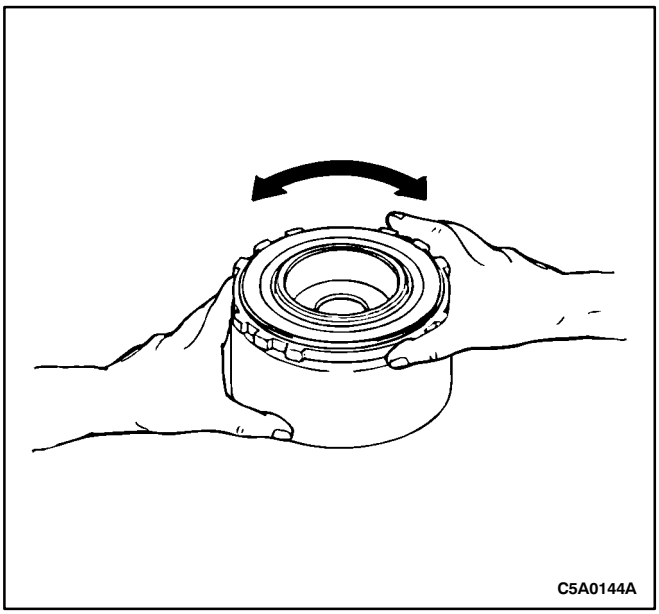

11. Verify the operation of the one-way clutch. While holding the outer race, turn the underdrive clutch. The underdrive clutch should rotate smoothly when turned counterclockwise and locks when turned clockwise.

UNDERDRIVE BRAKE

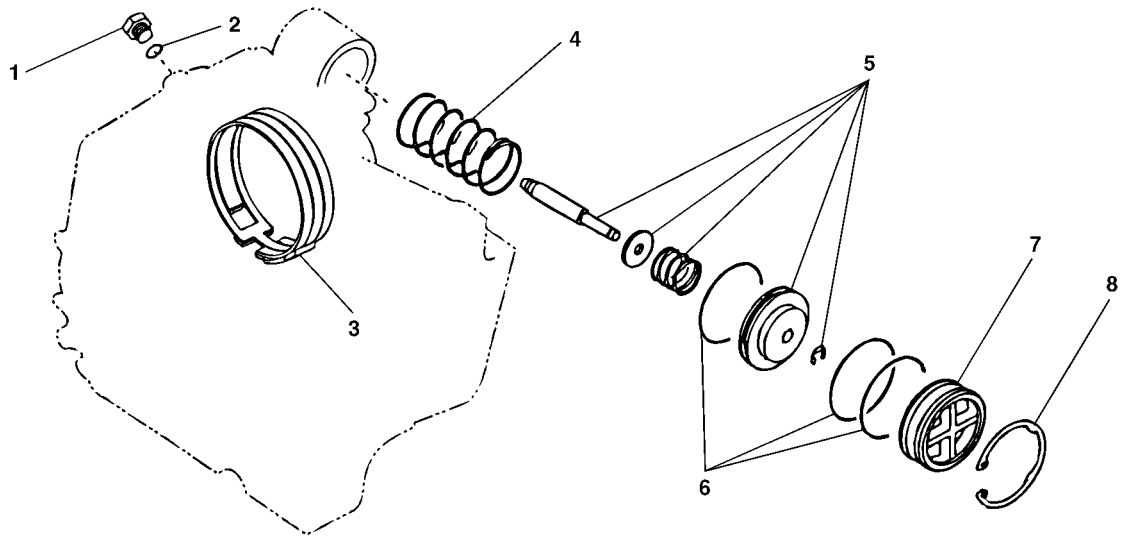

1. Underdrive Brake Bolt
2. Underdrive Brake Bolt O-Ring
3. Underdrive Brake Band
4. Underdrive Brake Spring
5. Underdrive Brake Piston
6. O-Rings
7. Underdrive Brake Cover
8. Snap Ring

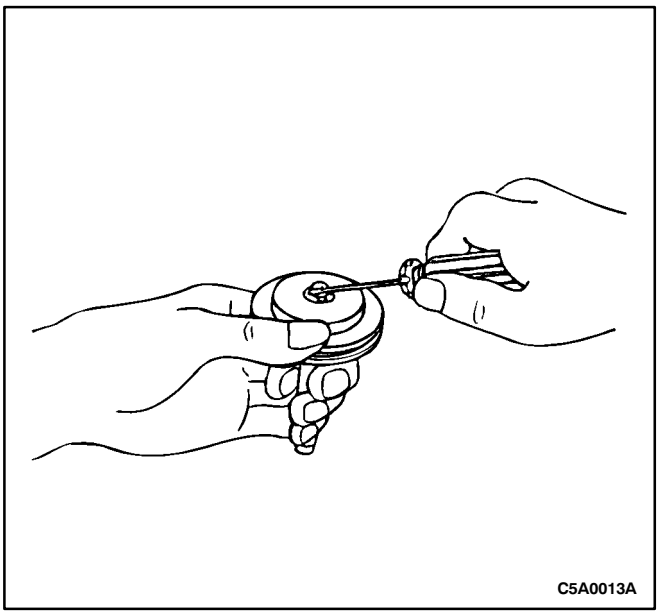

Disassembly Procedure

1. Remove and discard the snap ring from the underdrive brake piston assembly. Separate the spring, washer and piston rod.

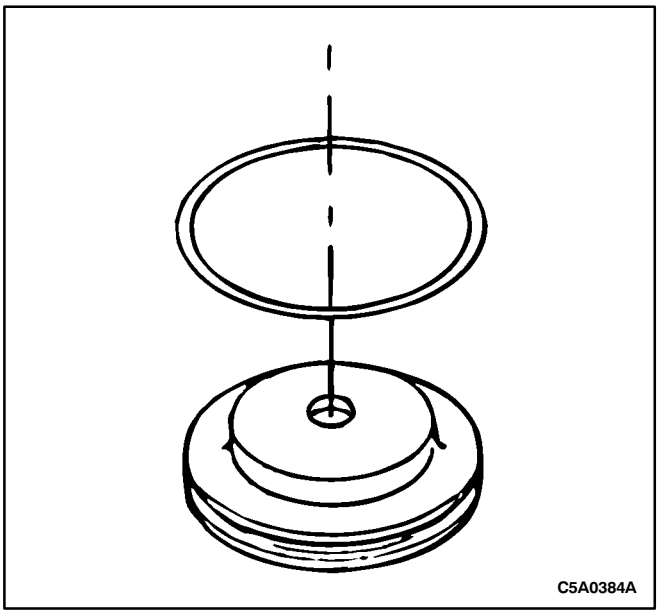

2. Remove and discard the underdrive brake piston O-ring.

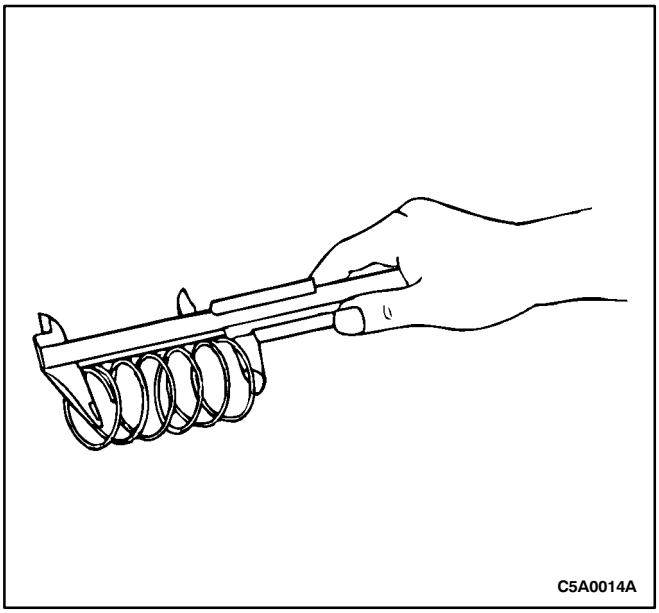

3. Inspect the underdrive brake spring.
   - Using vernier calipers, measure the free length and outer diameter of the spring. If it does not meet specifications, replace it.

	Free length	Outer Diameter
Inner	17.500 mm (0.68 in)	19.500 mm (0.77 in)
Outer	63.200 mm (2.49 in)	29.700 mm (1.17 in)

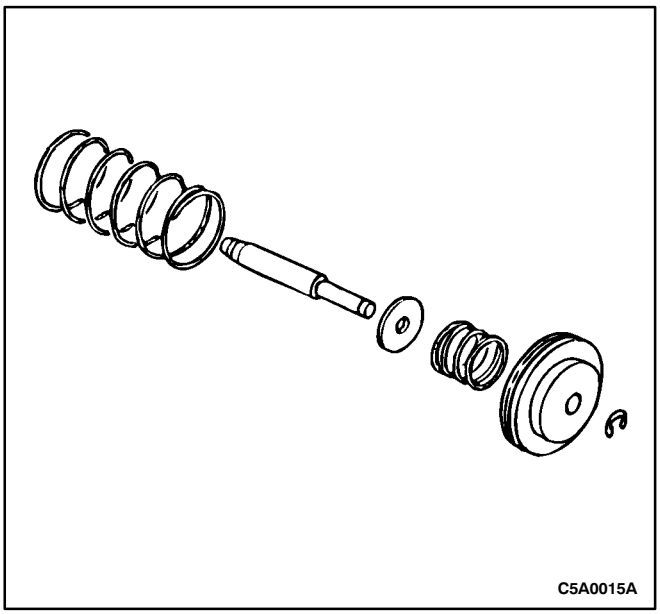

Assembly Procedure

1. Clean the components using a clean, high-quality parts cleaning solvent and use compressed air to dry all parts. Inspect all parts for damage or wear.
2. Assemble the piston rod, washer and compression spring to the piston.

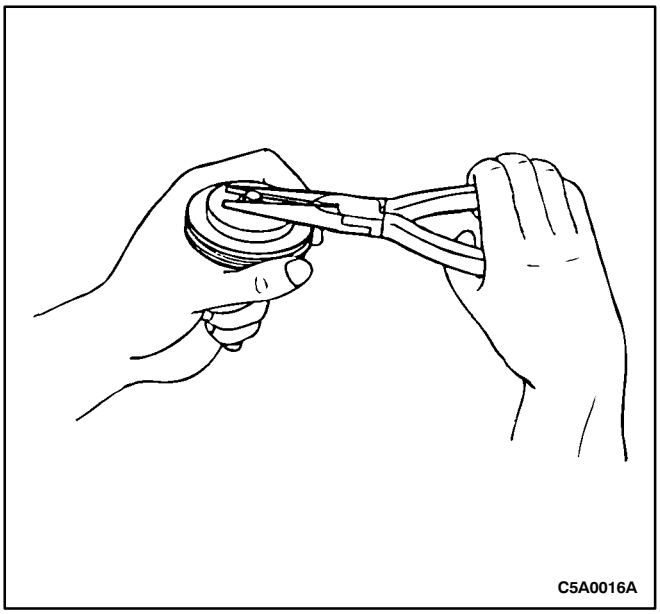

3. Install a new snap ring.

COUNTER DRIVE GEAR

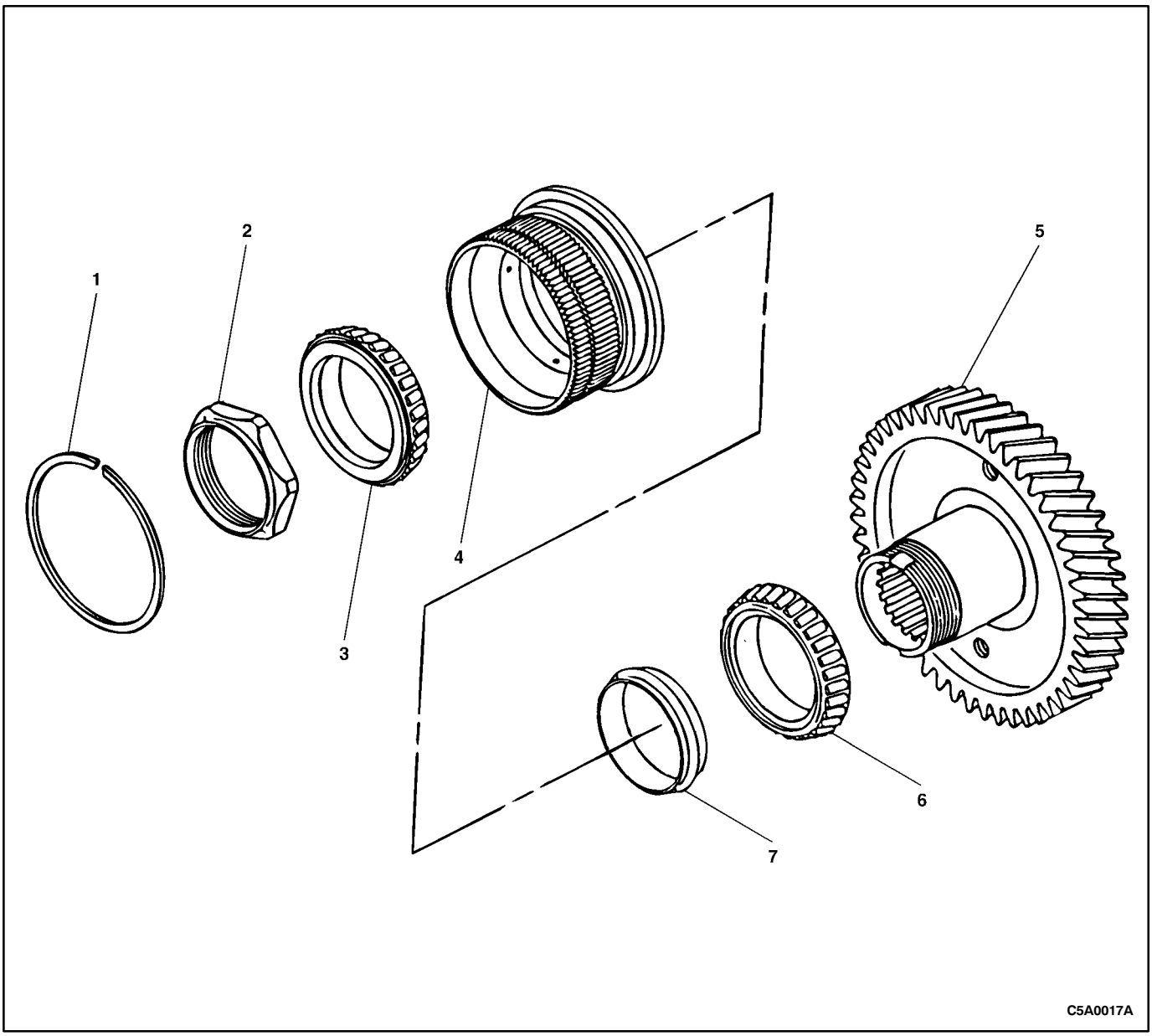

1. Snap Ring (Tapered)
2. locknut
3. Bearing
4. Bearing race
5. Counter Drive Gear
6. Bearing
7. Spacer
8. Snap Ring

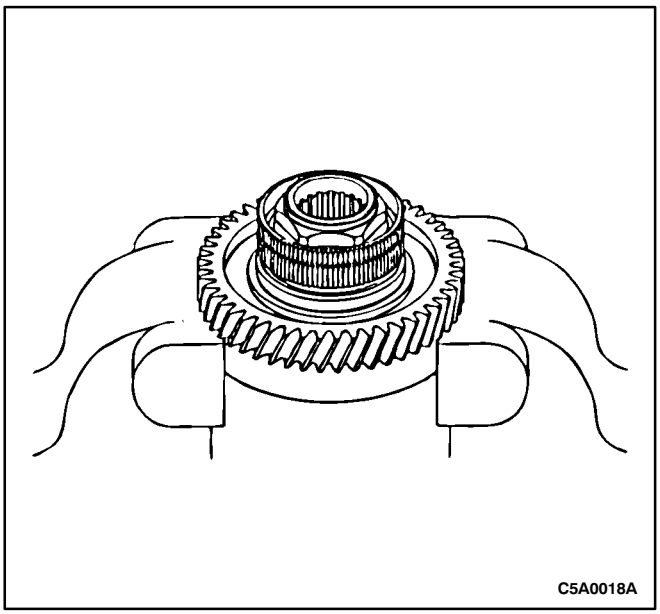

Disassembly Procedure

Caution: Use wood blocks or a brass jaw vise to prevent damage to the counter drive gear.

1. Install the counter drive gear into a vise.

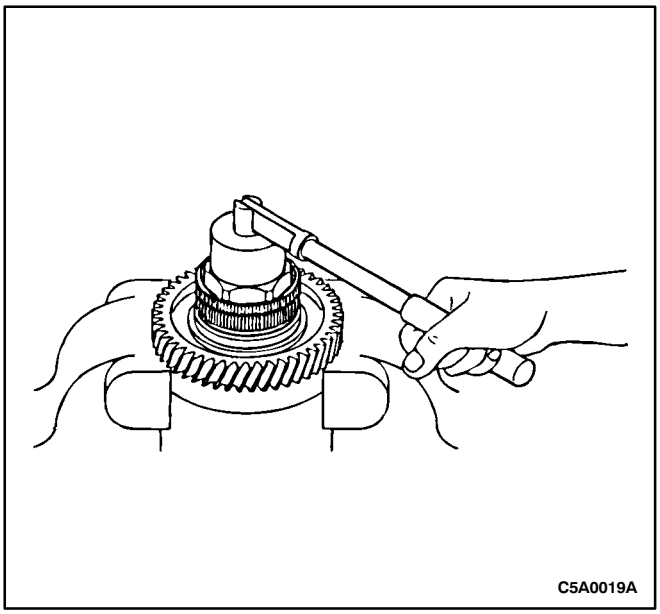

2. Remove and discard the locknut.

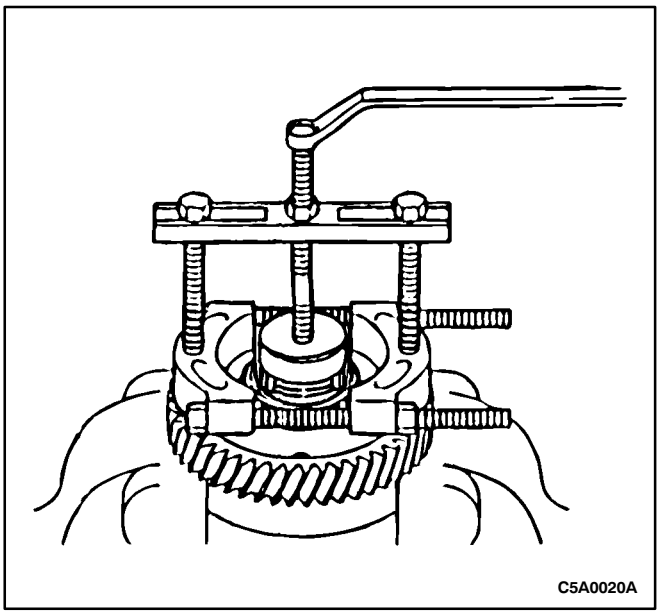

3. Using a suitable bearing puller, remove the bearing.

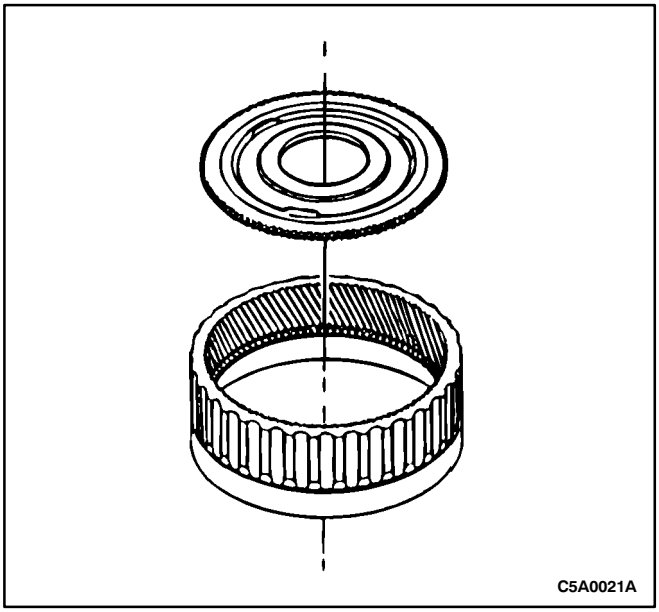

4. Remove bearing race and the spacer.

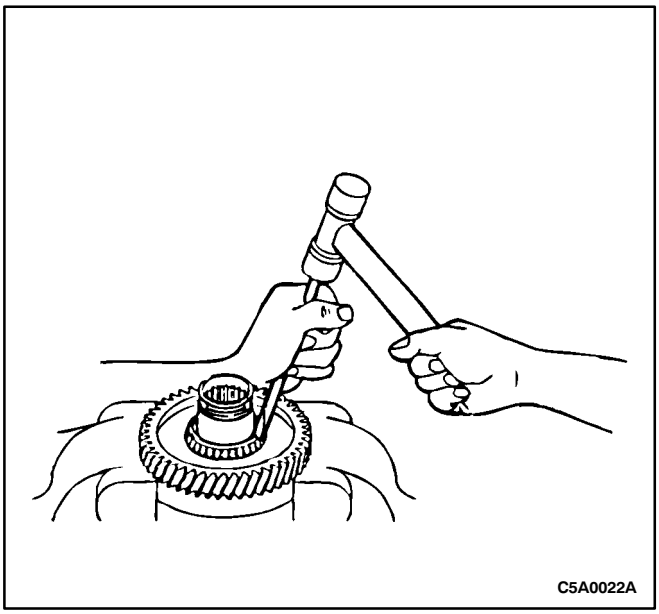

WARNING: USE CAUTION WHEN USING A CHISEL TO REMOVE COMPONENTS OR PERSONAL INJURY MAY RESULT.

5. Using a chisel, carefully remove the bearing cage and rollers.

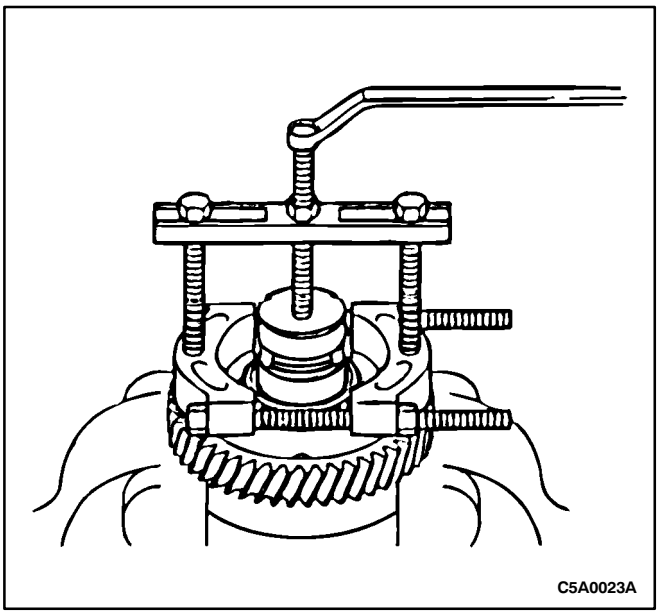

6. Using a suitable bearing puller, remove the bearing race.

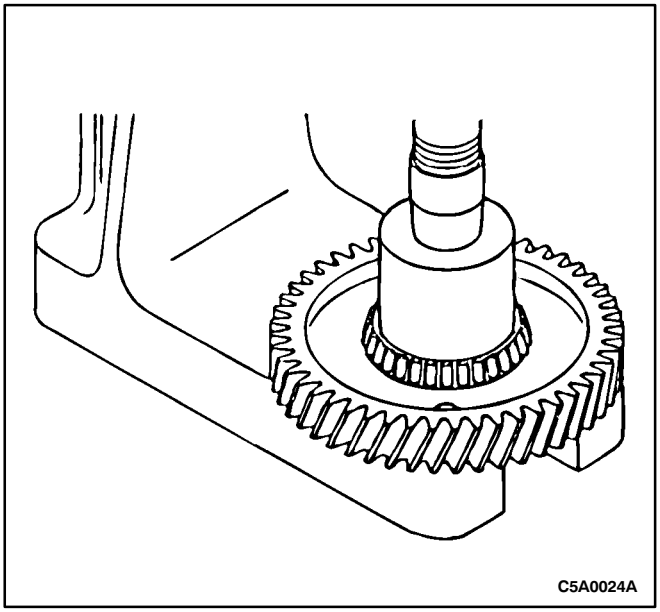

Assembly Procedure

1. Clean the components using a clean, high-quality parts cleaning solvent and use compressed air to dry all parts. Inspect all parts for damage or wear.
2. Using a press, install a new inner bearing on the counter drive gear.

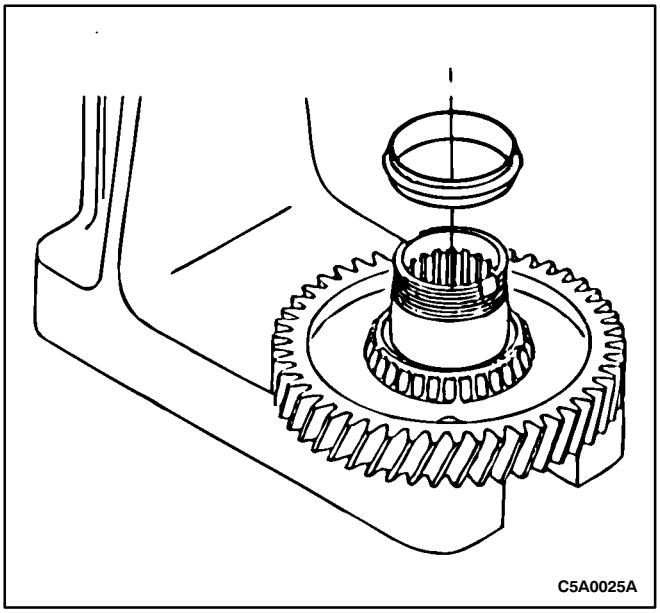

3. Install a new spacer.

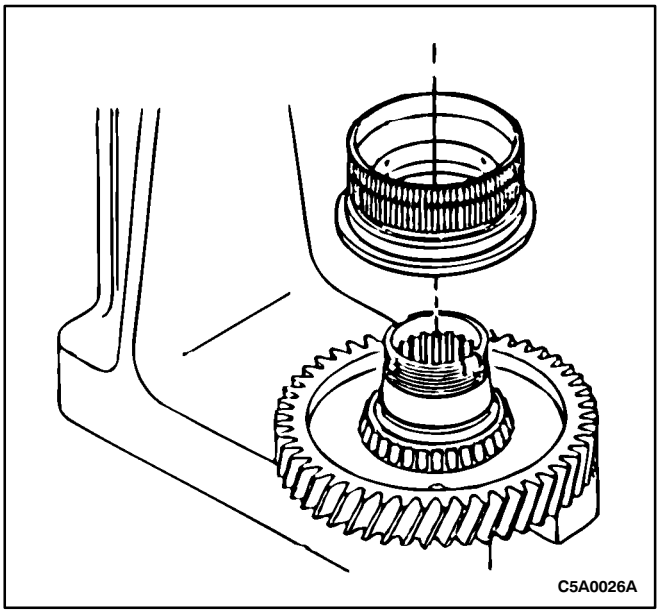

4. Install the bearing race.

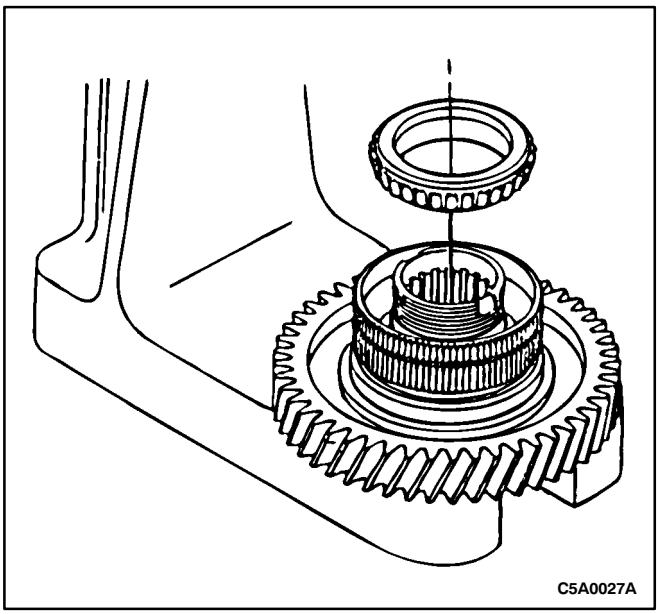

5. Using a press, install a new bearing until the bearing touches the spacer.

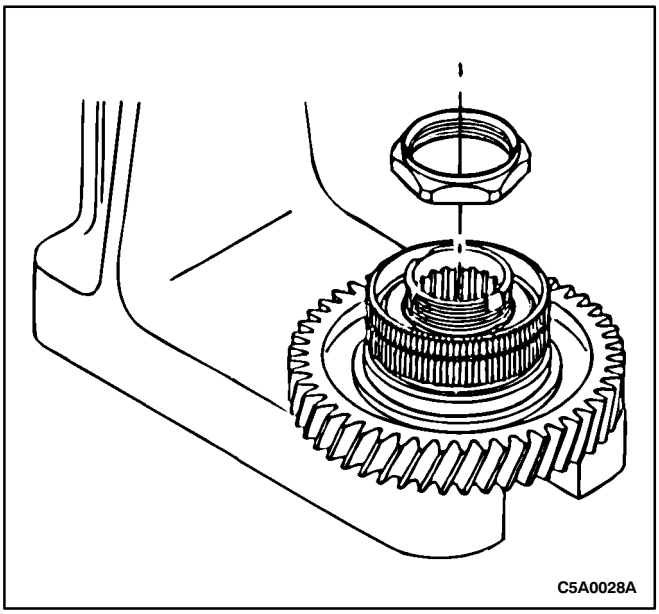

6. Install a new locknut. Do not tighten at this time.

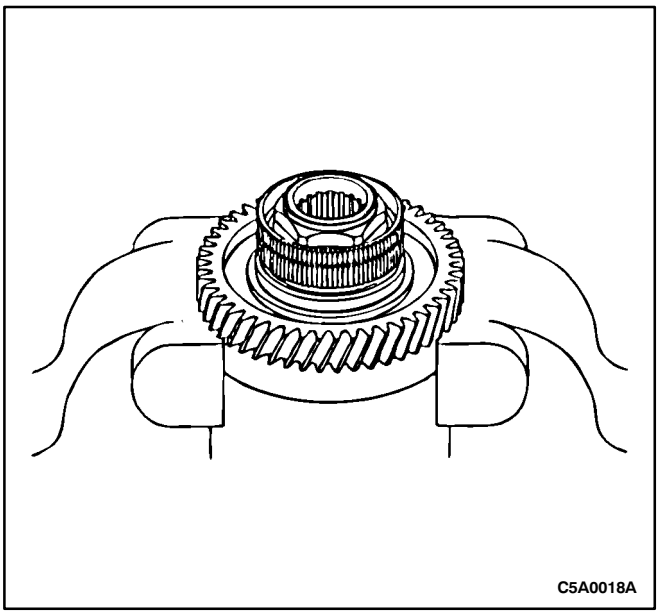

Caution: Use wood blocks or a brass jaw vise to prevent damage to the counter drive gear.

7. Install the counter drive gear into a vise.

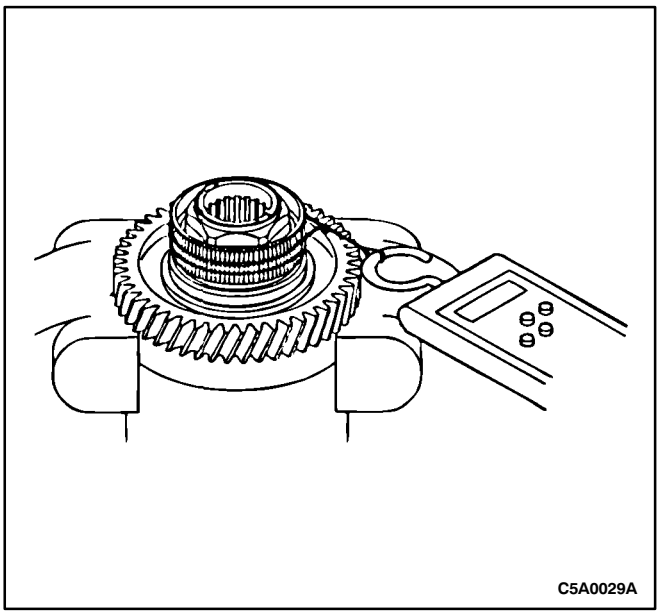

Notice: Seat the bearing by turning the counter drive gear in both directions before measuring the torque.

Notice: Measure the starting torque three times and calculate the average. If the torque is not within specification, replace the spacer.

8. Tighten the locknut until the starting torque is .294-.784 N•m (3-7 lb-in).

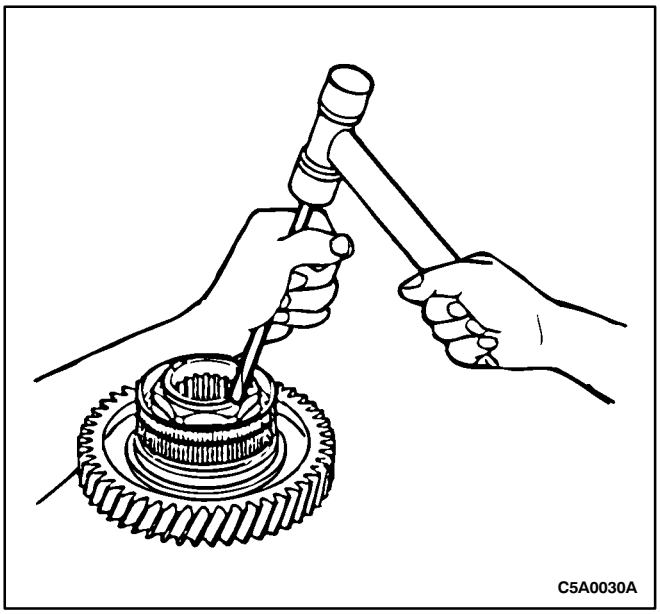

WARNING: USE CAUTION WHEN STAKING COMPONENTS WITH A CHISEL OR PERSONAL INJURY MAY RESULT.

9. Using a chisel, stake the locknut into the groove in two spots.

UNDERDRIVE PLANETARY GEAR AND DIFFERENTIAL DRIVE PINION GEAR

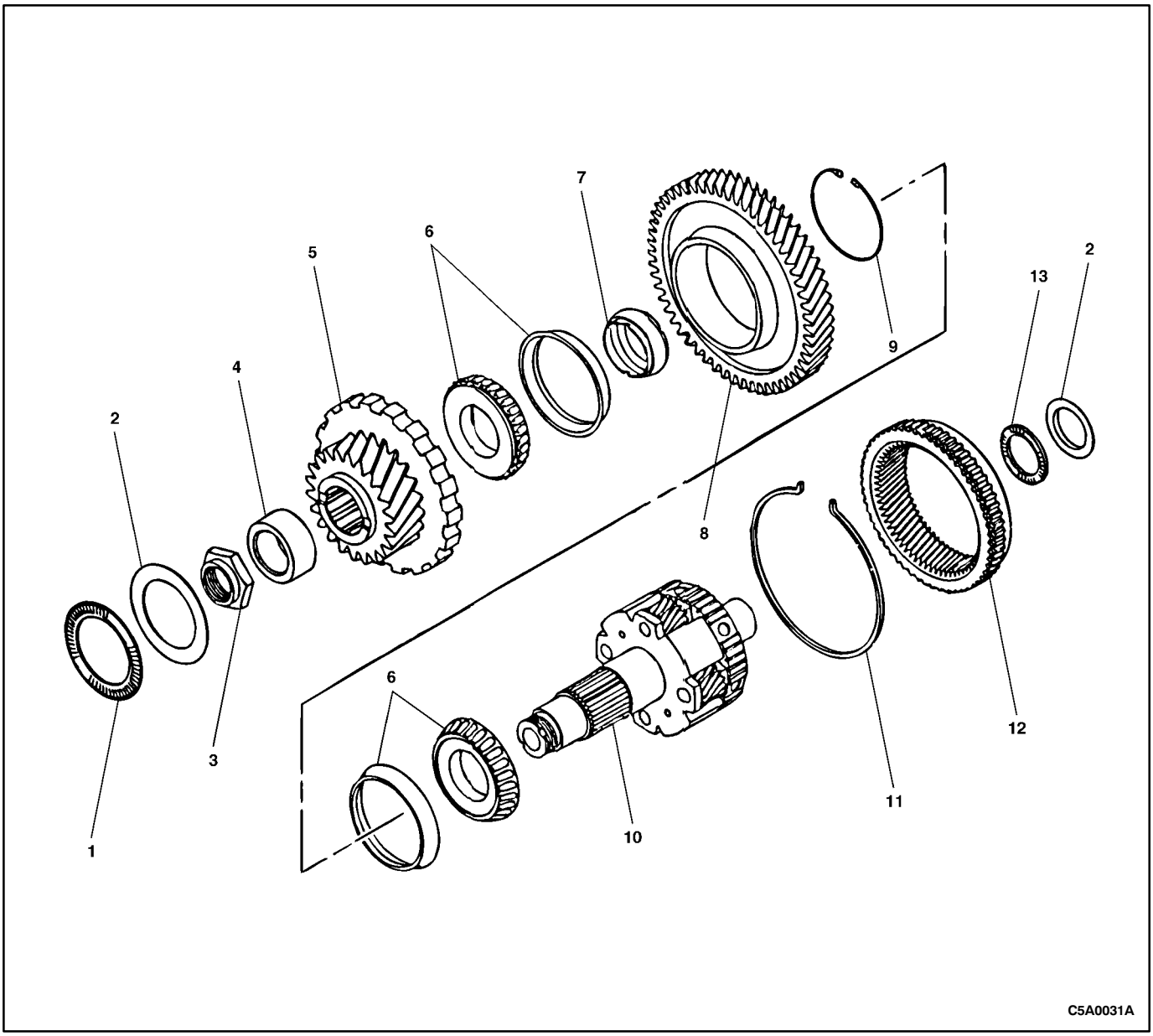

1. Thrust Bearing
2. Thrust Washer
3. locknut
4. Drive Pinion Gear Inner Bearing
5. Differential Drive Pinion Gear
6. Bearing and Race (Tapered)
7. Spacer
8. Counter Driven Gear
9. Snap Ring
10. Underdrive Planetary Gear
11. Snap Ring
12. Underdrive Planetary Ring Gear
13. Thrust Bearing

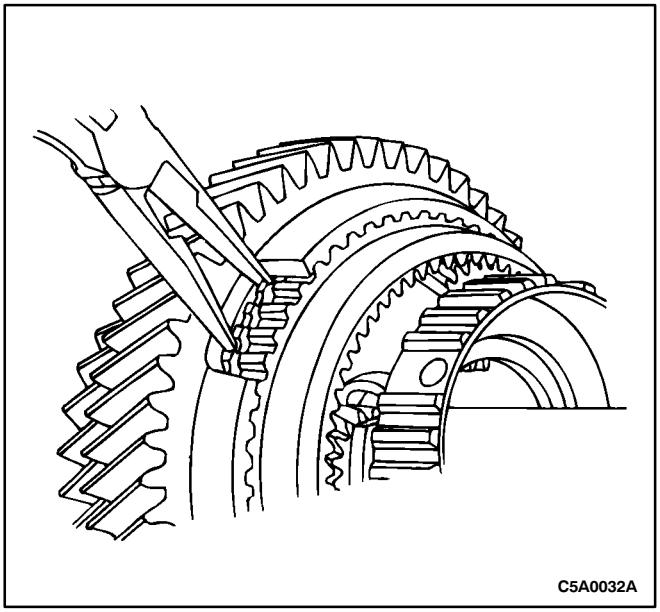

Tools Required

KM-696 Gear Holder

KM-697 Bearing Installer

KM-695 Bearing Installer

Disassembly Procedure

1. Compress the snap ring and remove the underdrive planetary ring gear.

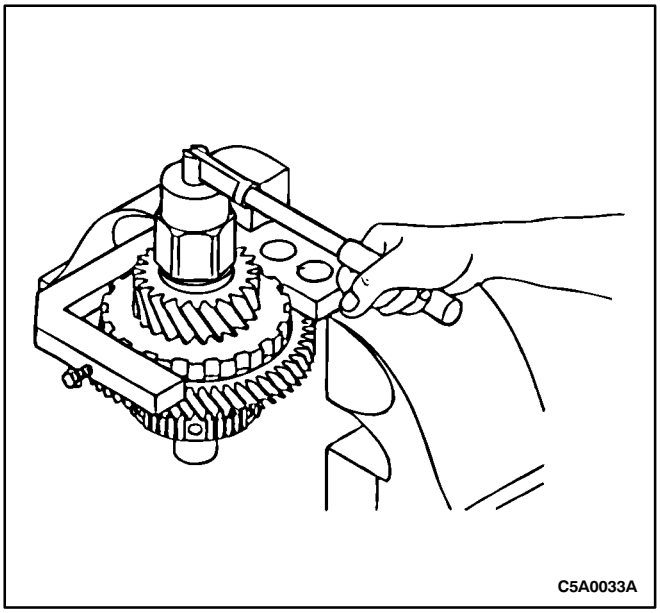

2. Using gear holder KM-696, install the gear assembly and gear holder in a vise. Remove and discard the locknut.

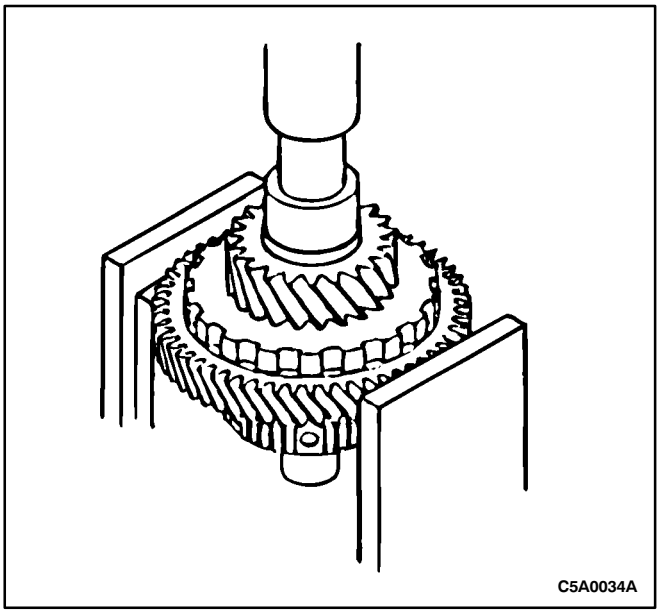

3. Install the gear assembly on a press.

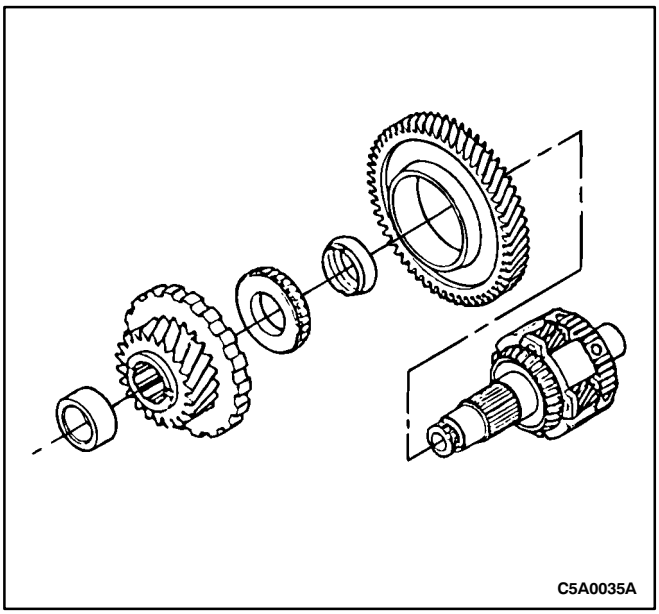

4. Press out the drive pinion gear inner bearing, differential drive pinion gear, bearing, spacer and counter driven gear.

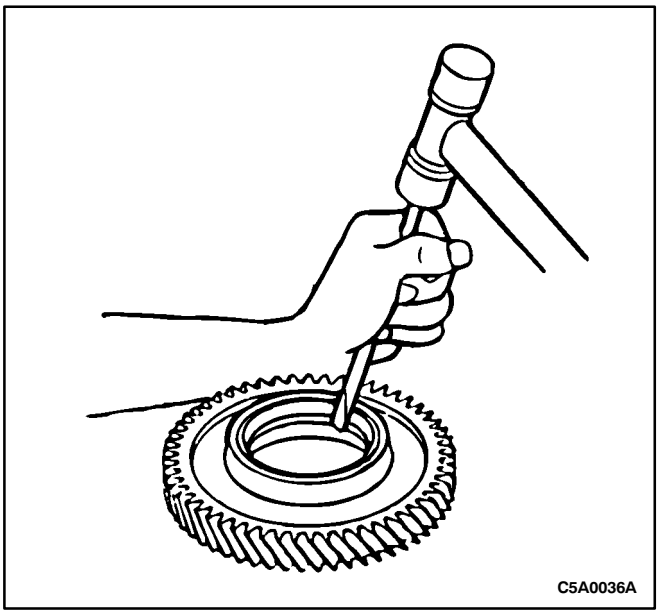

5. Remove the bearing races from the counter driven gear.

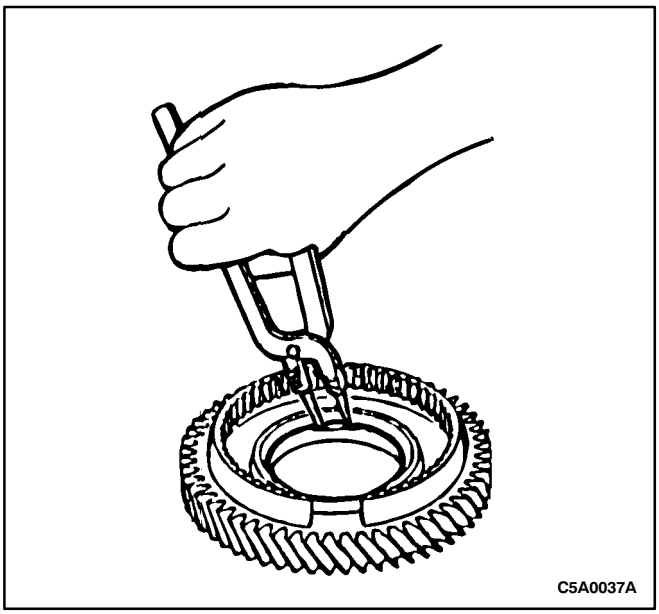

6. Remove the snap ring.

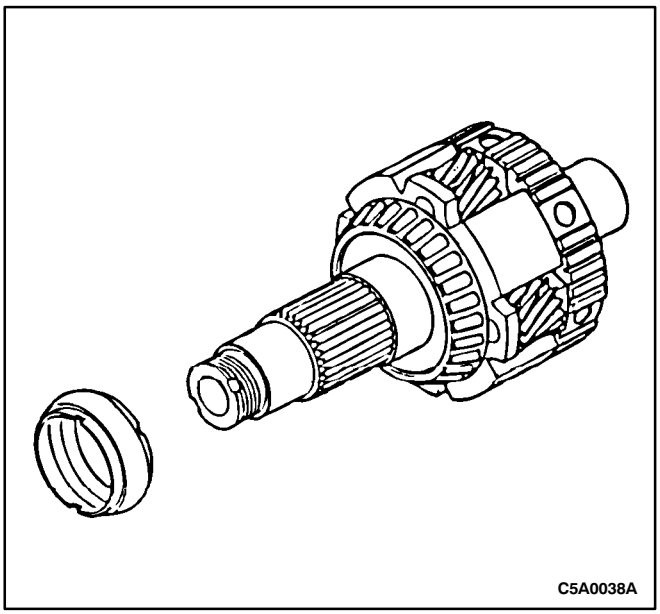

7. Remove the spacer.

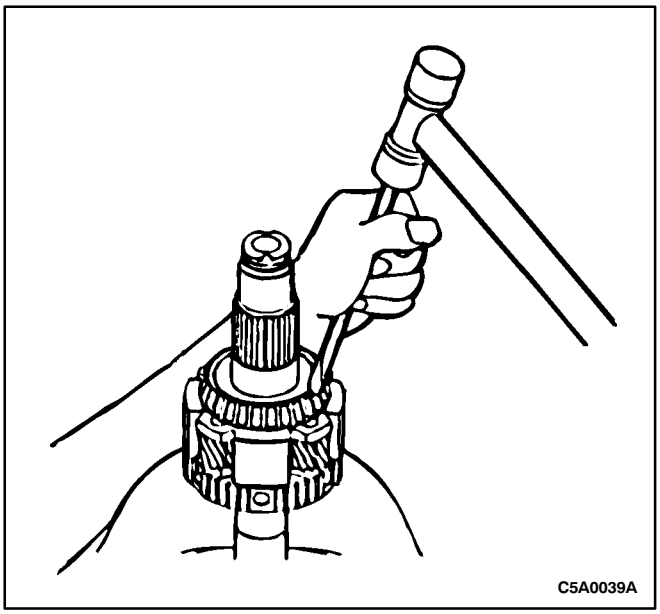

WARNING: USE CAUTION WHEN USING A CHISEL TO REMOVE COMPONENTS OR PERSONAL INJURY MAY RESULT.

8. Using a chisel and hammer, carefully remove the bearing cage and rollers.
   - Be careful not to damage the underdrive planetary gear.

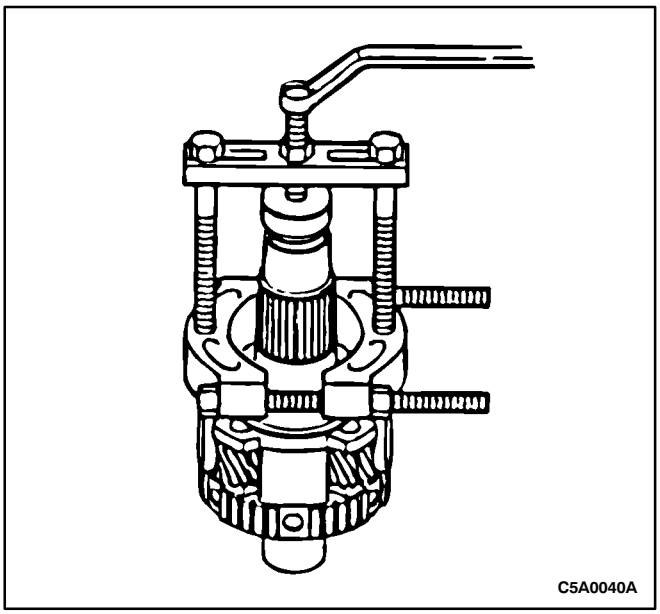

9. Using a suitable bearing puller, remove the bearing race from the underdrive planetary gear.

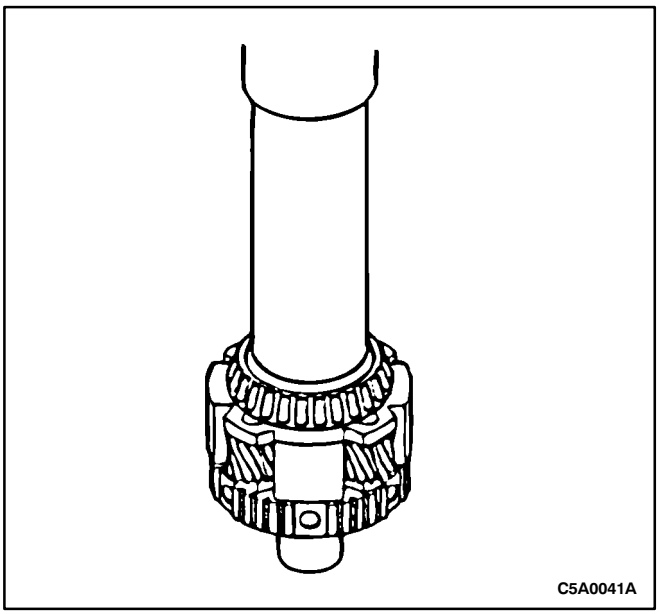

Assembly Procedure

Notice: Press the bearing until it touches the shaft

1. Clean the components using a clean, high-quality parts cleaning solvent and use compressed air to dry all parts. Inspect all parts for damage or wear.
2. Using bearing installer KM-697, press a new bearing on the rear of the underdrive planetary gear.

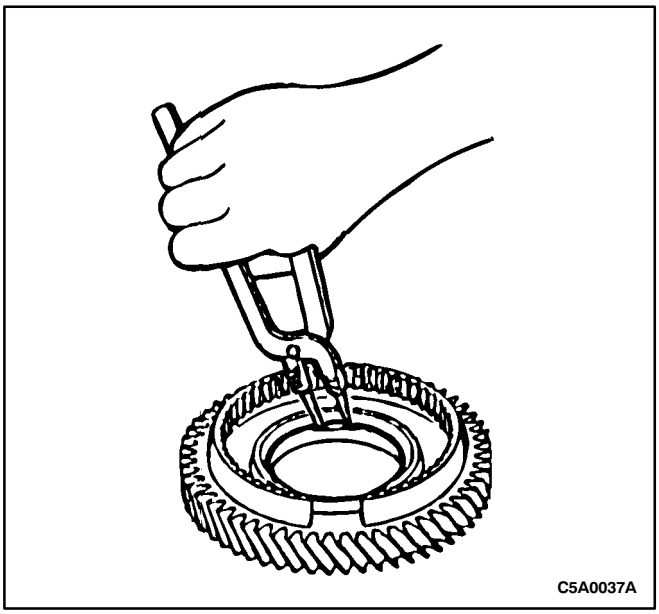

3. Install the snap ring into the counter driven gear.

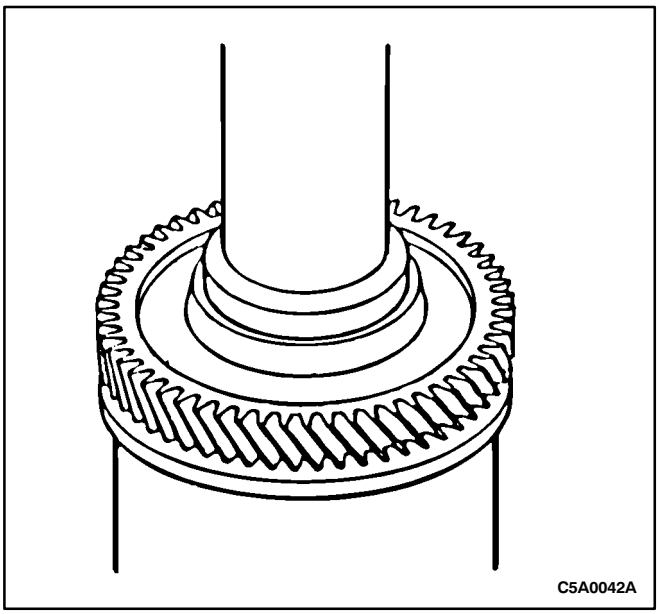

Notice: Press the bearing races into the counter driven gear until they touch the snap ring.

4. Using bearing installers KM-697 and KM-695, press the bearing races into the counter driven gear.

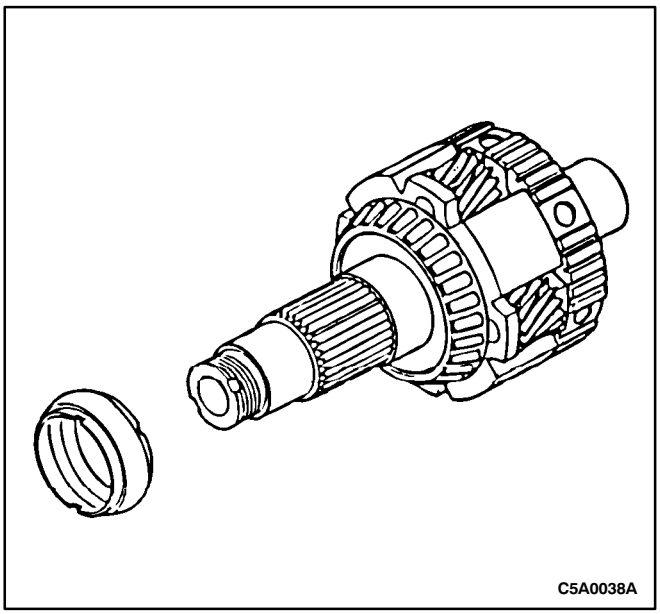

5. Install the spacer.
6. Install the counter driven gear.

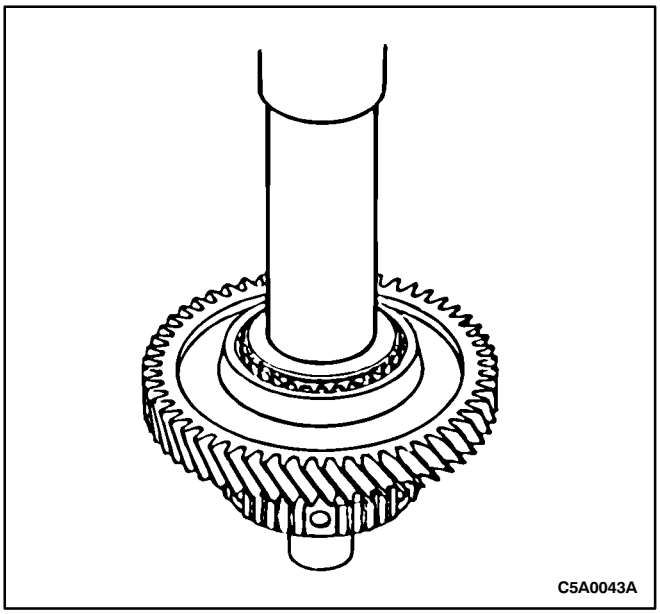

Notice: Press the new bearing until it touches the underdrive planetary gear.

7. Using bearing installer KM-697, press a new bearing onto the front of the underdrive planetary gear.

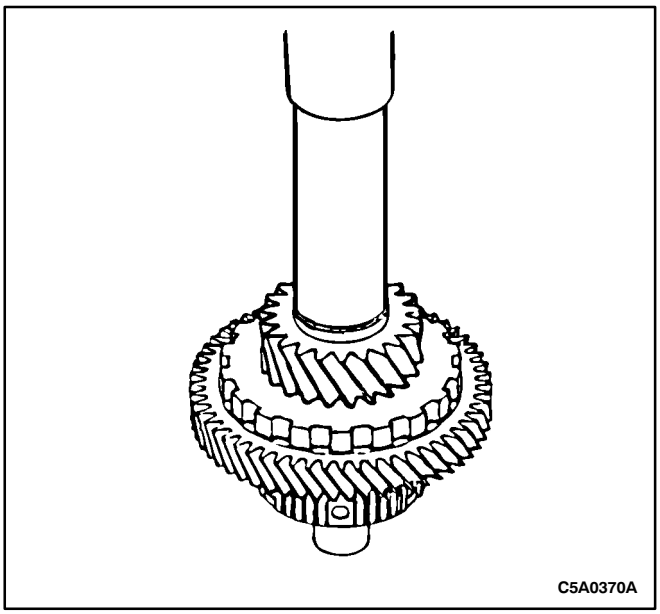

Notice: Press the differential drive pinion gear until it touches the underdrive planetary gear.

8. Using bearing installer KM-697, press the differential drive pinion gear onto the underdrive planetary gear.

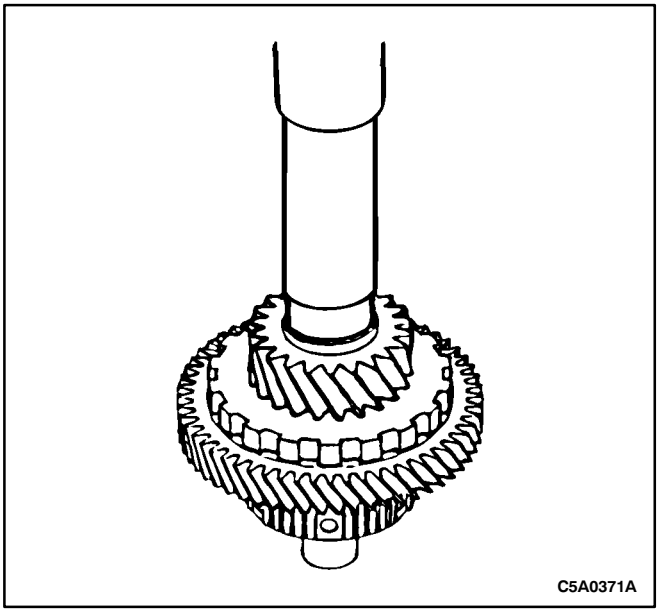

Notice: Press the drive pinion gear inner bearing until it touches the differential drive pinion gear.

9. Using bearing installer KM-697, press on the drive pinion gear inner bearing.

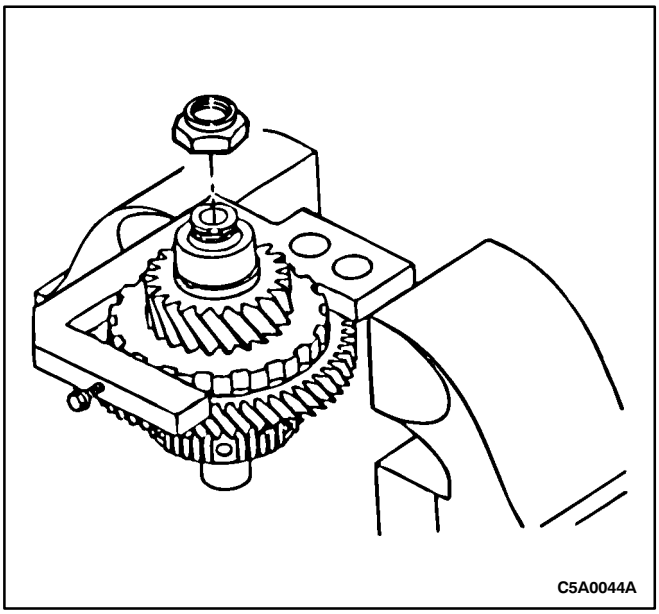

10. Install a new locknut. Do not tighten at this time.

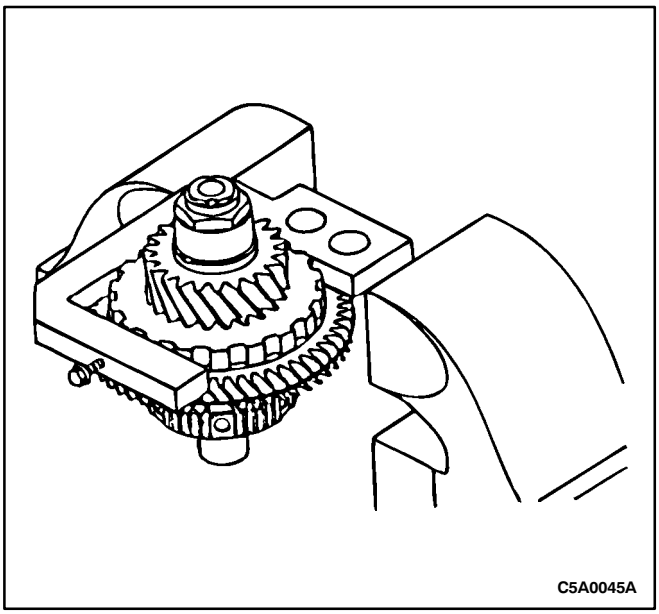

11. Install the gear assembly and gear holder KM-696 in a vise.

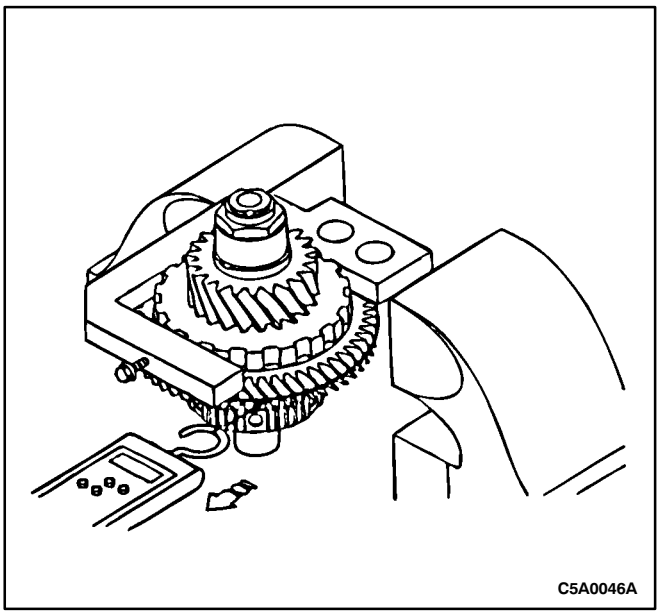

Notice: Seat the bearing by turning the counter drive gear in both directions before measuring the torque.

Notice: Measure the starting torque three times and calculate the average. If the torque is not within specification, replace the spacer.

12. Tighten the locknut until the starting torque is 0.54-1.32 N•m (5-12 lb-in).

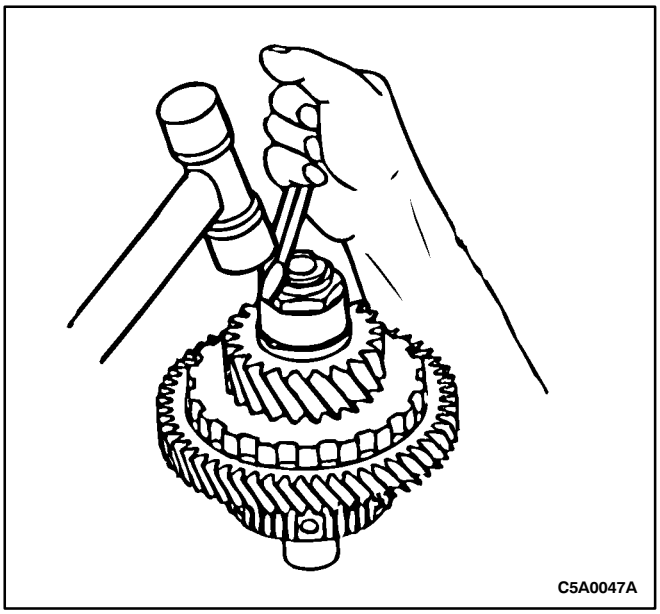

WARNING: USE CAUTION WHEN STAKING COMPONENTS WITH A CHISEL OR PERSONAL INJURY MAY RESULT.

13. Using a chisel, stake the locknut into the groove in two spots.

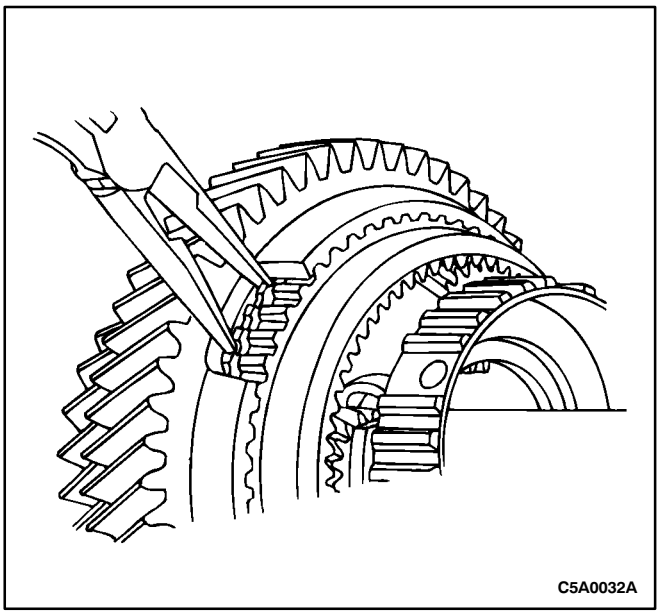

14. Install the snap ring and the underdrive planetary ring gear.

TRANSAXLE REAR CASE AND C-1 ACCUMULATOR PISTON

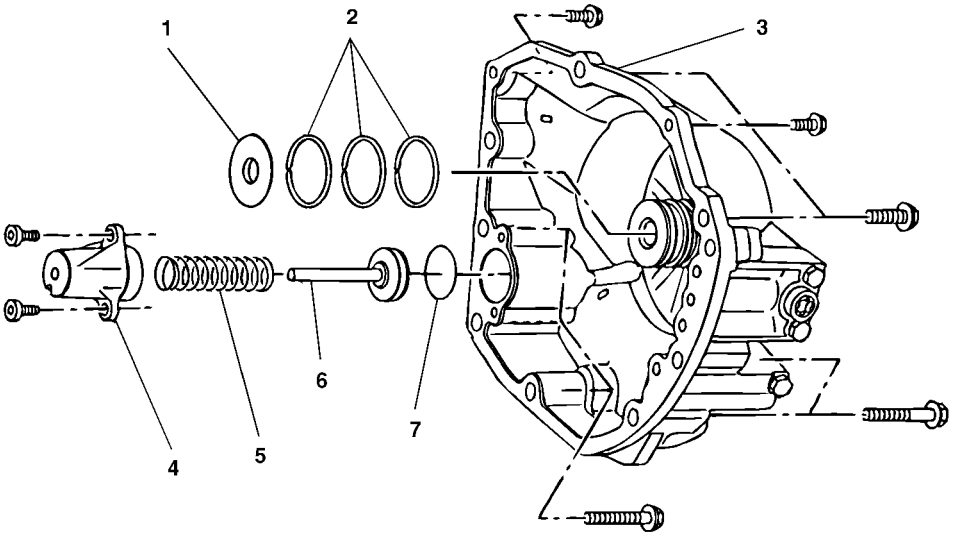

C5A0048A

1. Thrust Washer
2. Seal Rings
3. Transaxle Case
4. C-1 Accumulator Cover
5. Spring
6. C-1 Accumulator Piston
7. O-Ring

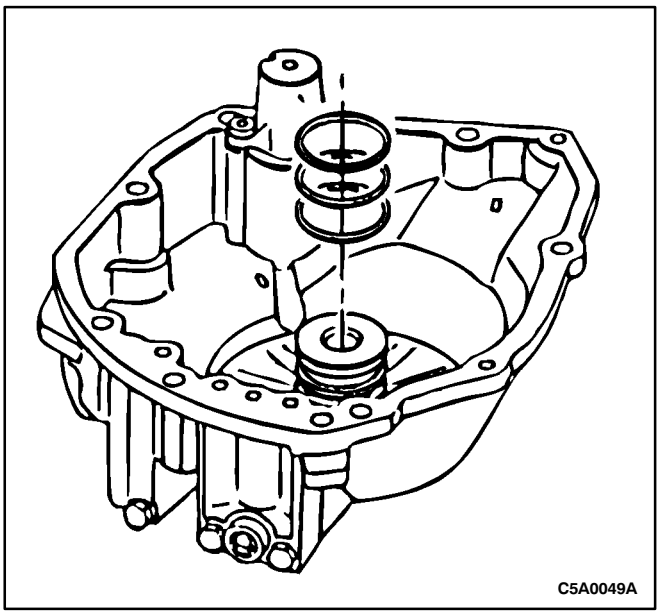

Disassembly Procedure

Notice: Do not spread the seal rings ends more than necessary.

1. Remove the seal rings.

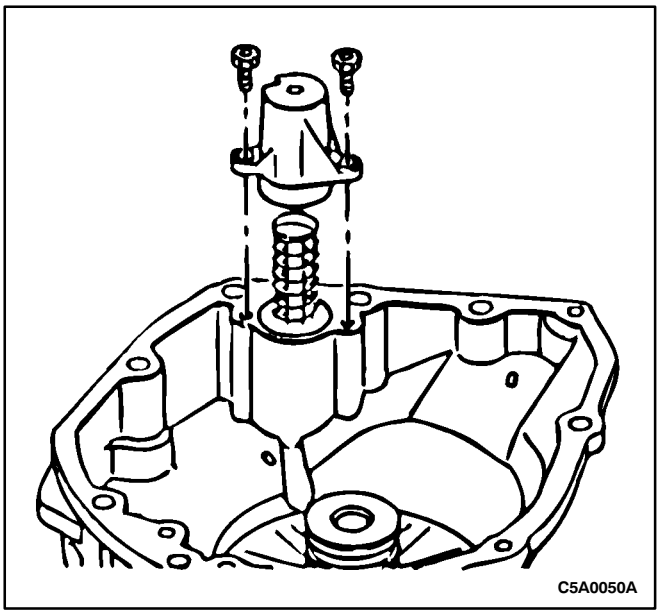

2. Remove the C-1 accumulator cover.

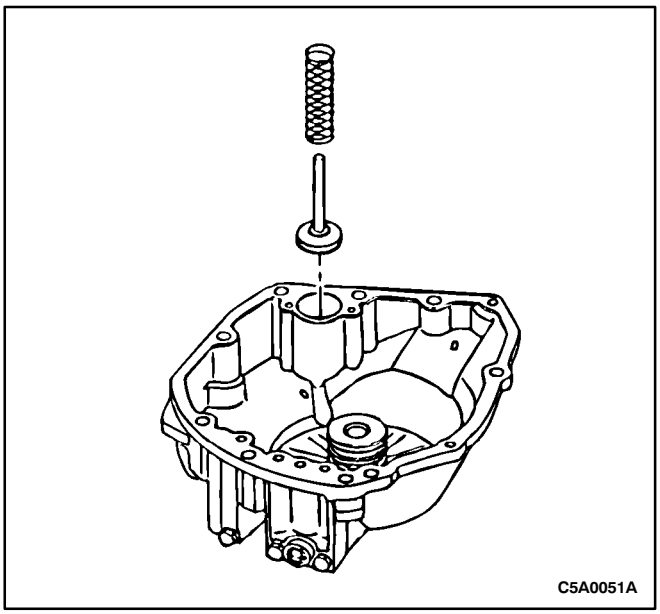

3. Remove the spring and the C-1 accumulator piston.

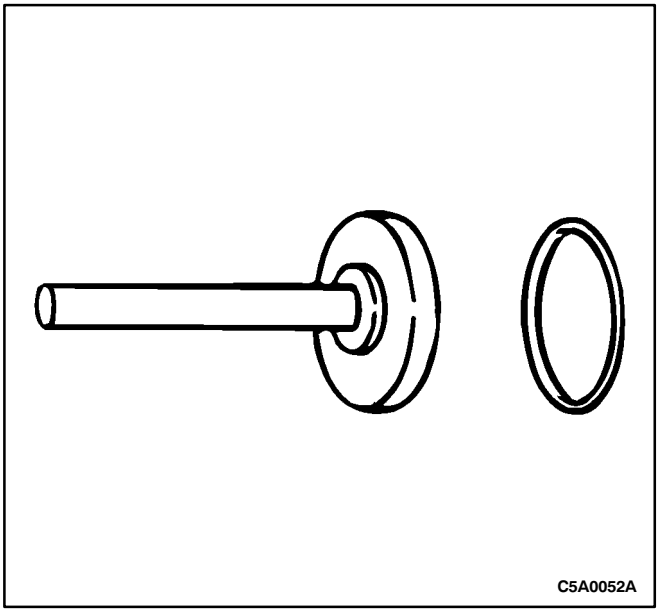

4. Remove and discard the O-ring from the C-1 accumulator piston.

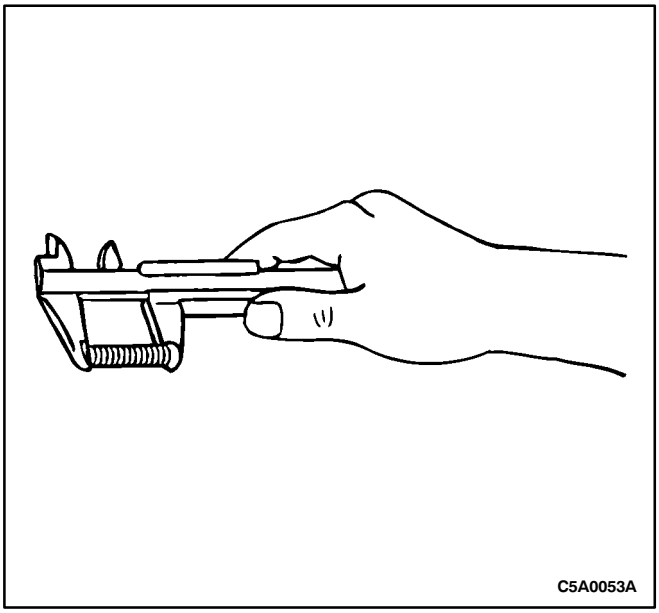

5. Inspect the spring.
   - Using vernier calipers, measure the free length and outer diameter of the spring. If it does not meet specifications, replace it.

Free Length	Outer Diameter
78.100 mm (3.07 in)	20.700 mm (0.815 in)

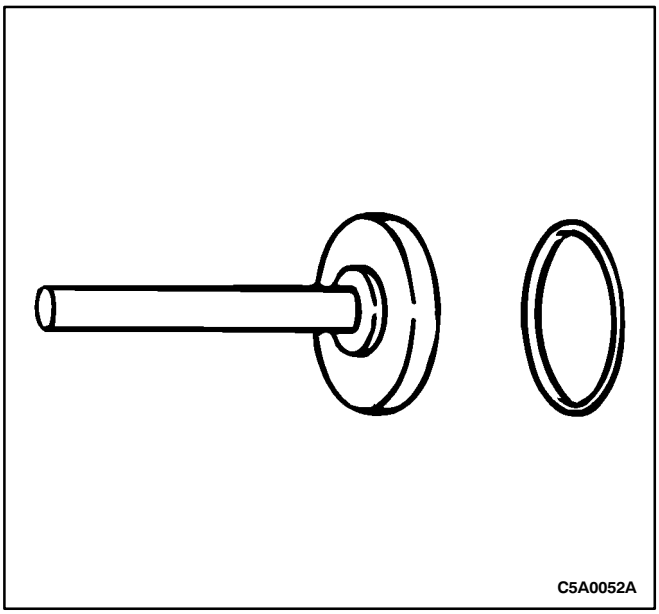

Assembly Procedure

1. Clean the components using a clean, high-quality parts cleaning solvent and use compressed air to dry all parts. Inspect all parts for damage or wear.

Notice: Apply TOTAL FLUID HX to the O-ring and the C-1 accumulator piston cavity.

2. Install a new O-ring on the C-1 accumulator piston.

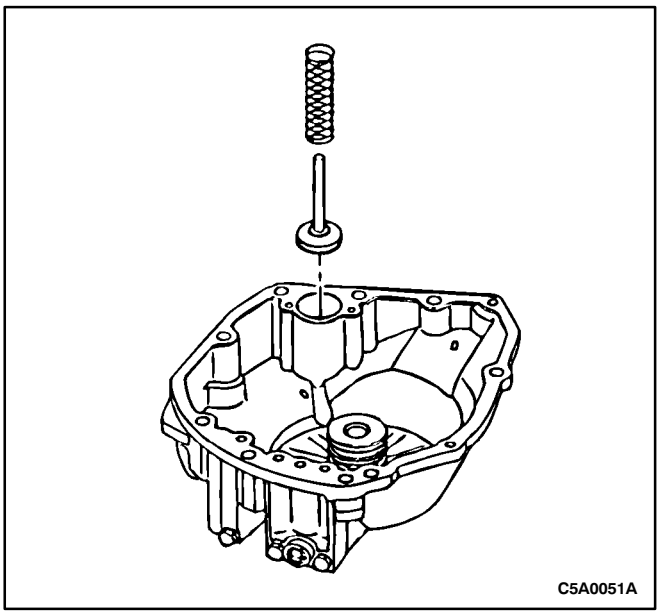

3. Install the C-1 accumulator piston and the spring.

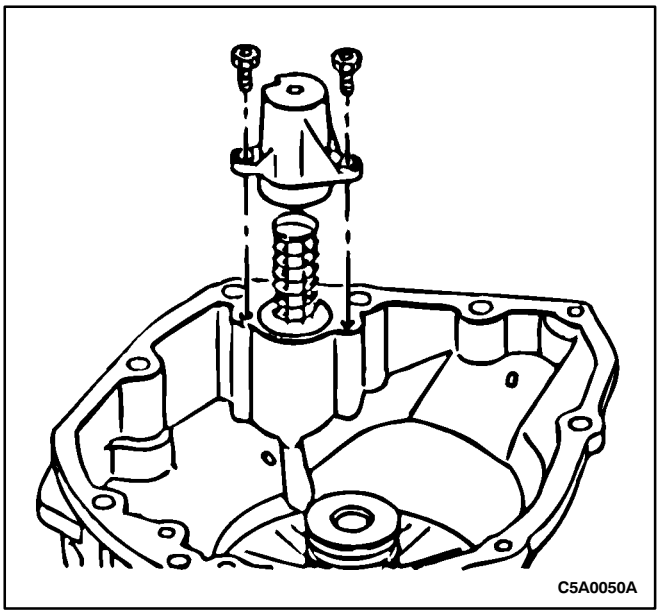

4. Install the C-1 accumulator cover.

Tighten

Tighten the bolts to 8-12 N•m (71-106 lb-in).

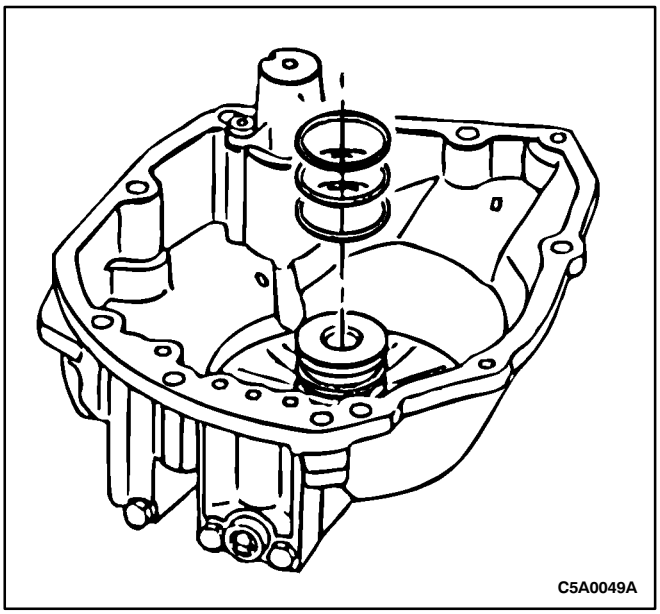

Notice: Apply TOTAL FLUID HX to the seal rings. Do not spread the seal rings ends more than necessary.

5. Install the seal rings.

DIFFERENTIAL

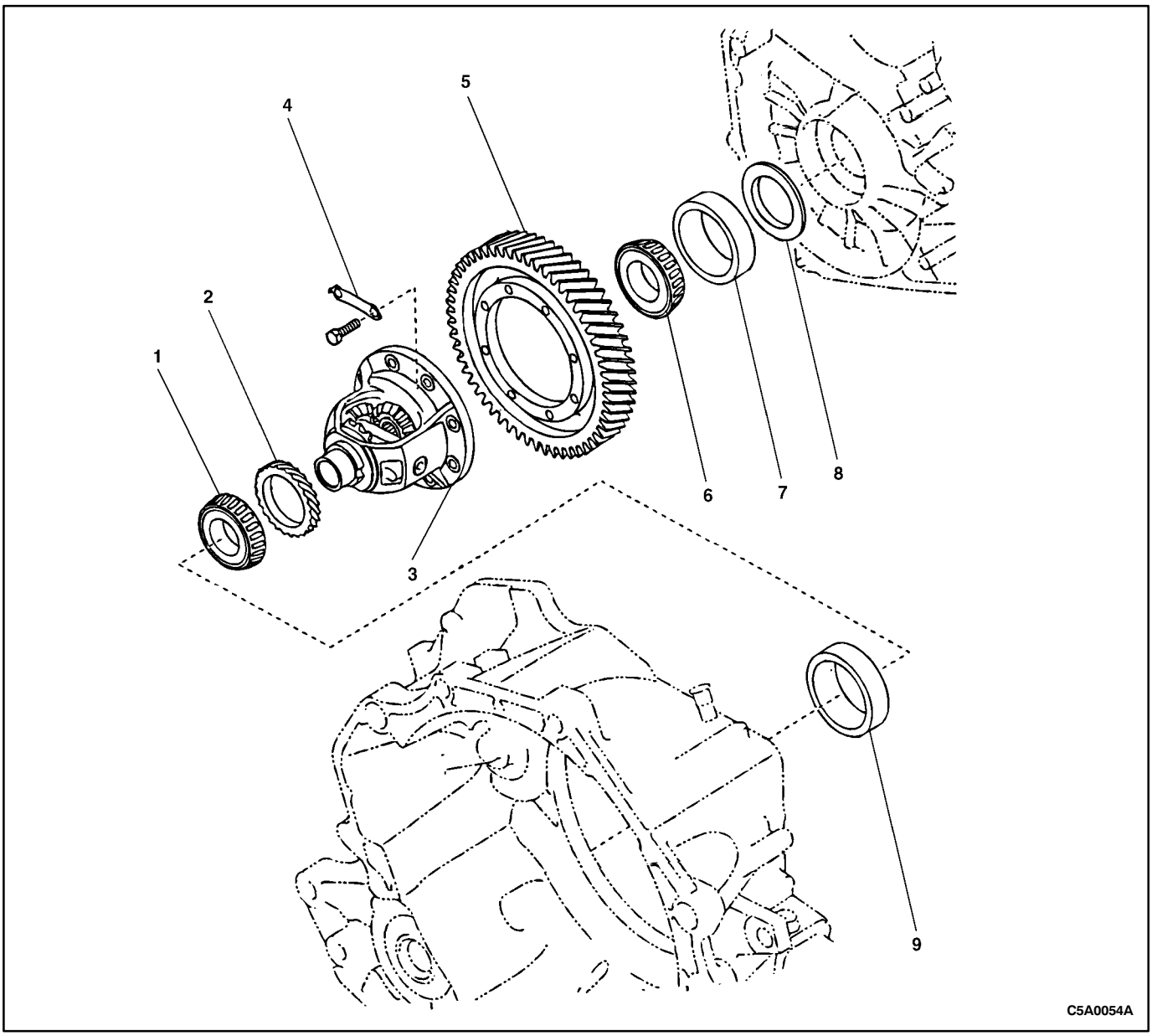

1. Inner Bearing (Differential Case Side)
2. Speedometer Drive Gear
3. Differential Case
4. Differential Ring Gear Bolt Lock Plate
5. Differential Ring Gear
6. Outer Bearing (Ring Gear Side)
7. Outer Bearing Race
8. Shim
9. Inner Bearing Race

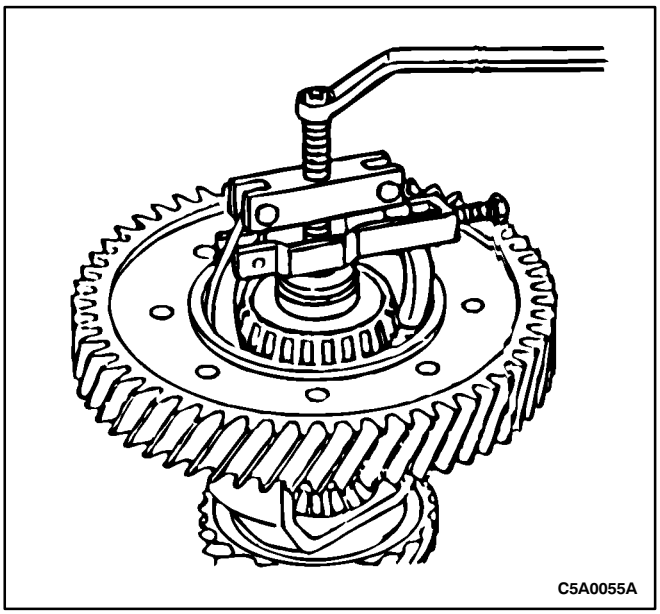

Tools Required

KM-709 Bearing Puller Adapter

KM-695 Bearing Installer

KM-J 28544 Adapter

KM-674 Oil Seal Installer

KM-210-A Bearing Puller

Disassembly Procedure

Notice: Install the bearing puller to the cut out portion of the differential case.

1. Using a bearing puller, remove the outer bearing.

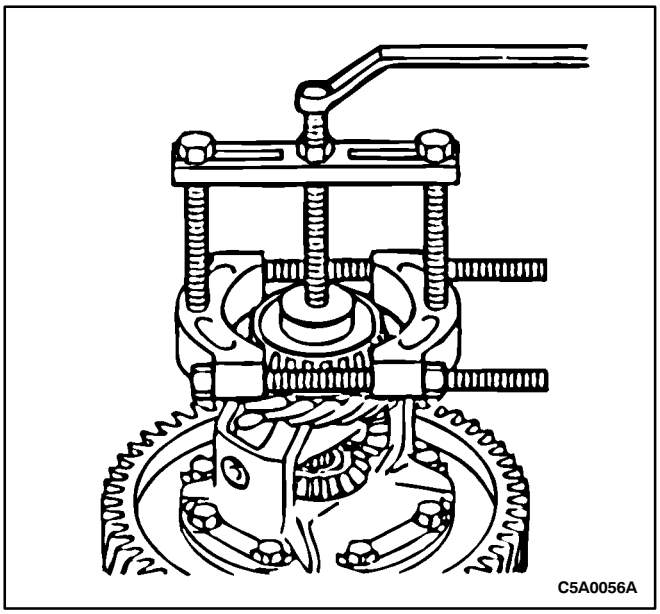

2. Using a suitable bearing puller, remove the inner bearing.

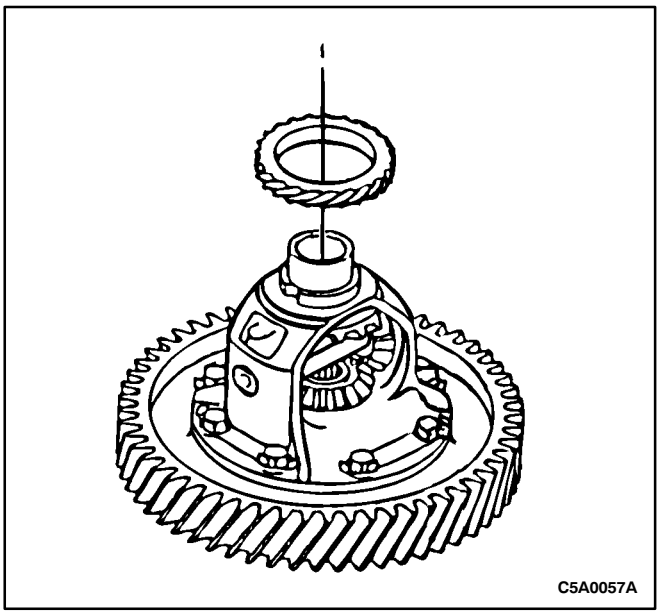

WARNING: USE CAUTION WHEN REMOVING THE SPEEDOMETER DRIVE GEAR OR PERSONAL INJURY MAY RESULT.

3. Remove the speedometer drive gear.

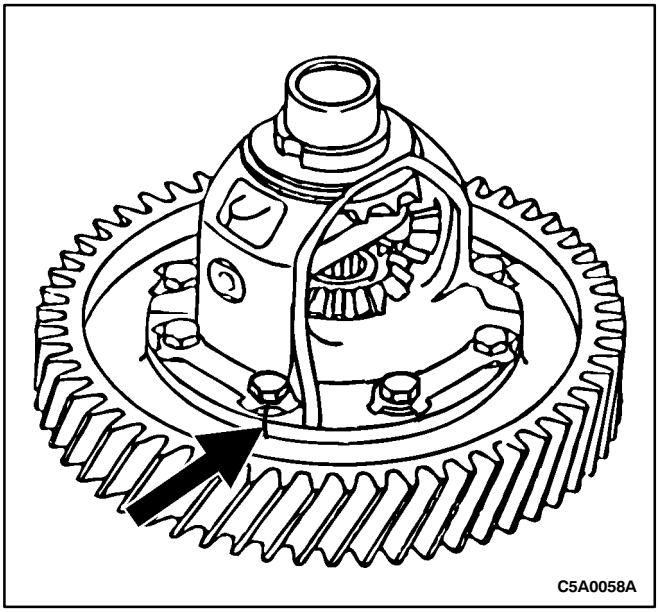

4. Index mark the differential ring gear and the differential case using a scribe.

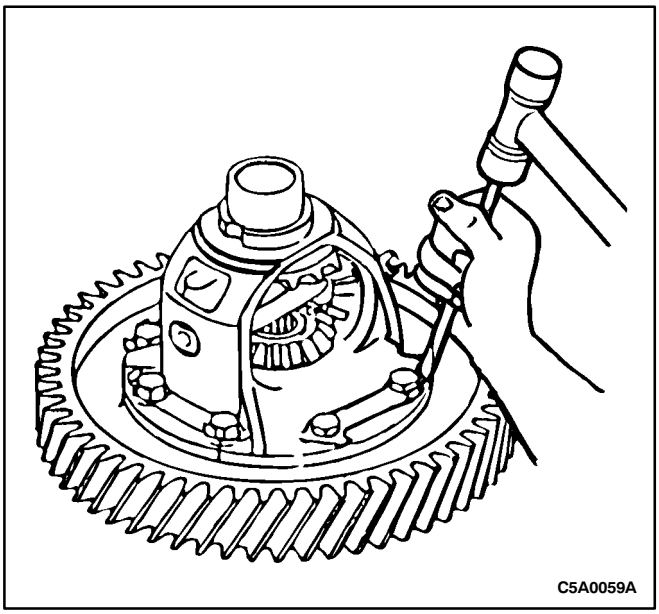

5. Tap down the tabs of the differential ring gear bolt lock plate.

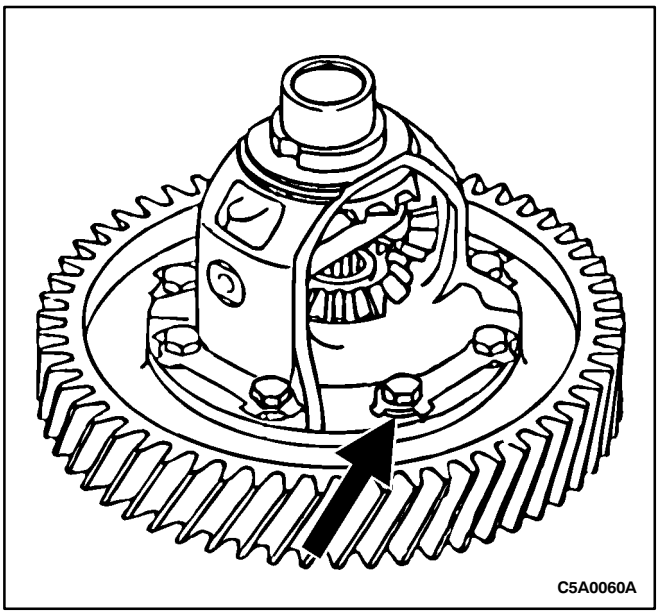

6. Remove and discard the differential ring gear bolts and lock plates.

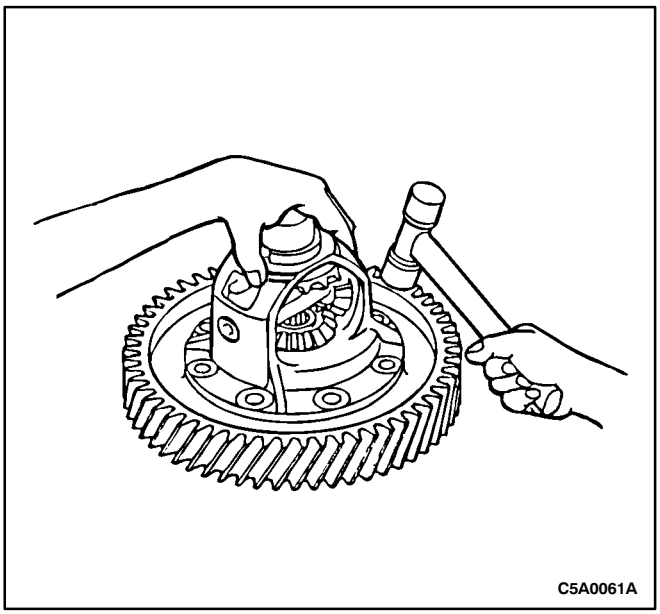

7. Using a plastic hammer, tap the on the ring gear to remove.

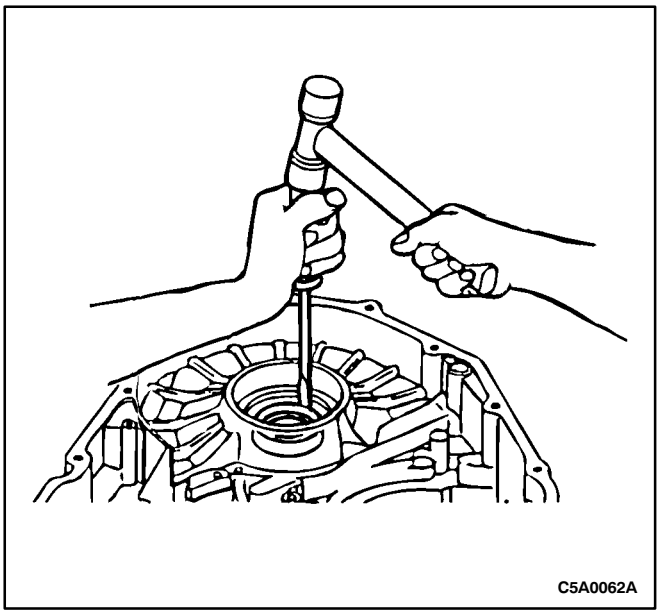

8. Remove and discard the oil seal from the transaxle case side.

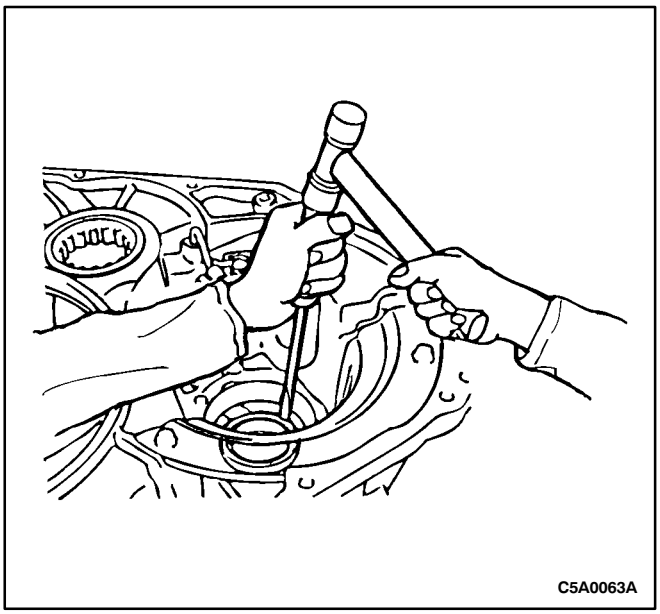

9. Remove and discard the oil seal from the transaxle housing side.

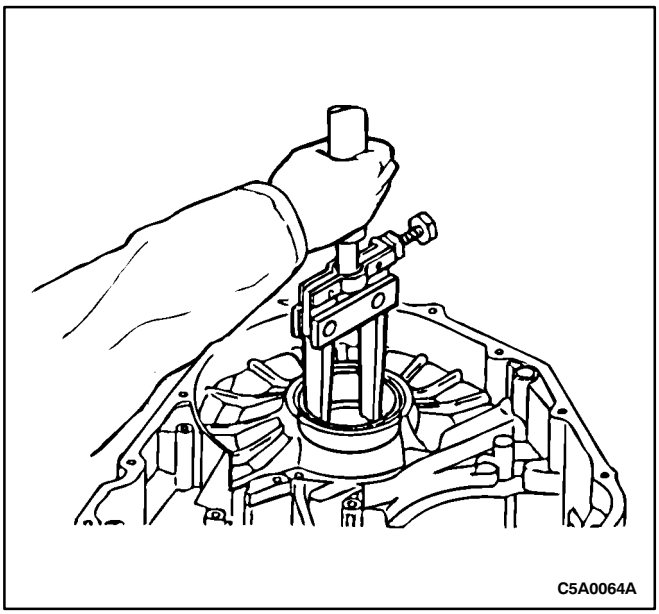

Notice: If equipped, remove preload shim.

10. Using bearing puller KM-210-A and bearing puller adapter KM-709, remove the bearing cup from the transaxle case side.

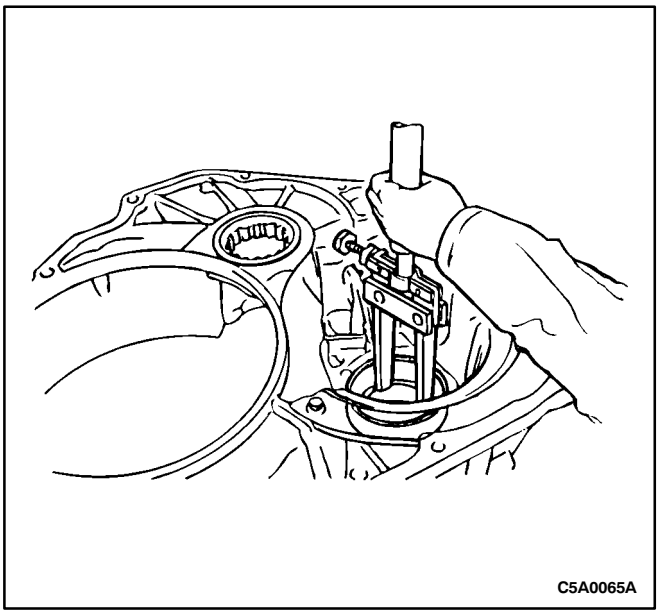

11. Using bearing puller KM-210-A and bearing puller adapter KM-709, remove the bearing cup from the transaxle housing side.

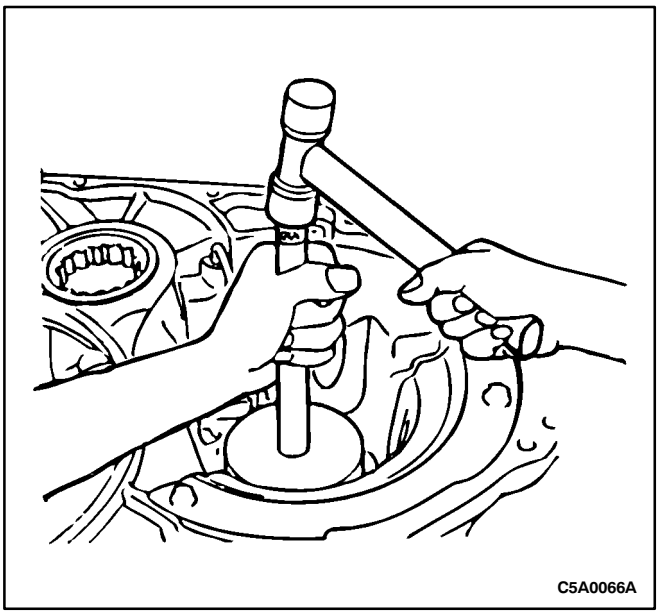

Assembly Procedure

1. Clean the components using a clean, high-quality parts cleaning solvent and use compressed air to dry all parts. Inspect all parts for damage or wear.
2. Using bearing installer KM-695, install the bearing cup into the transaxle housing.

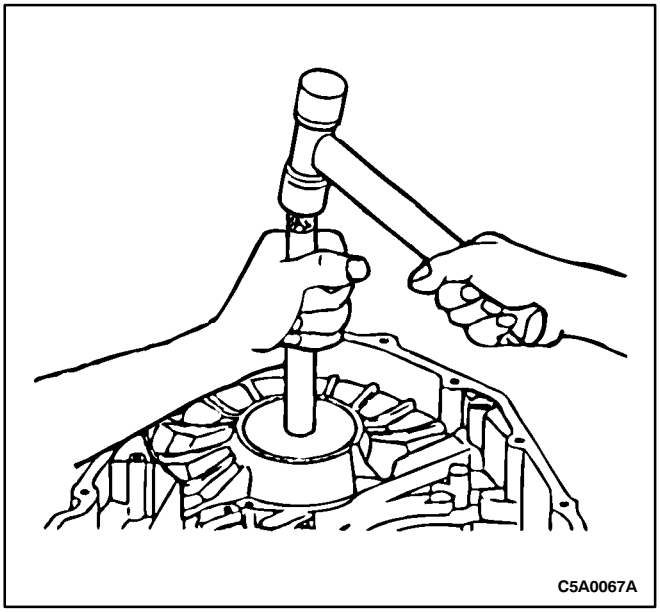

Notice: If equipped, install preload shim.

3. Using bearing installer KM-695, install the bearing cup into the transaxle case.

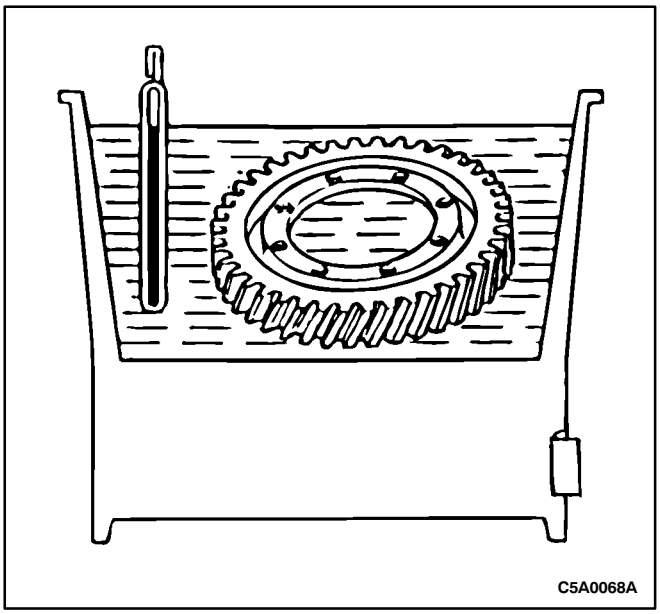

Caution: Do not heat the differential ring gear above 110°C (255°F).

4. Using a oil bath or an oven, heat the differential ring gear to 90-100°C (219-237°F).

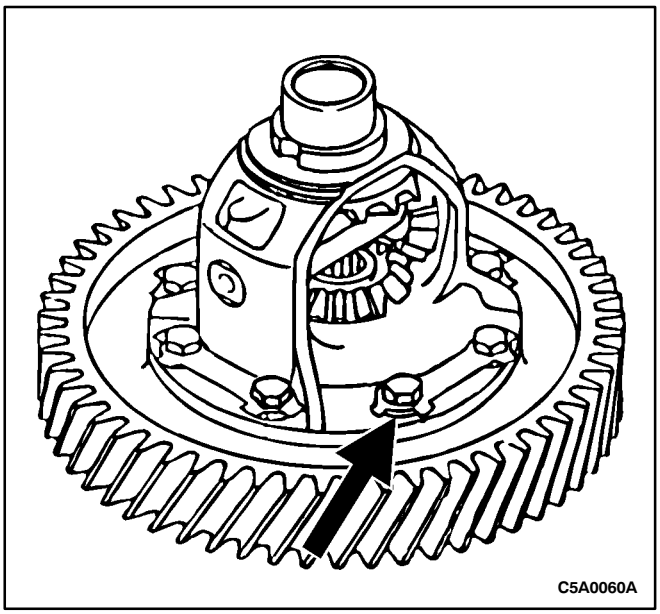

Notice: Clean the oil from the contact surface of the differential ring gear.

Notice: Tighten the bolts evenly and gradually.

5. Install the differential ring gear on the differential case. Install new differential ring gear bolts and lock plates.

Tighten

Tighten ring gear bolts to 90-103 N•m (66-76 lb-ft).

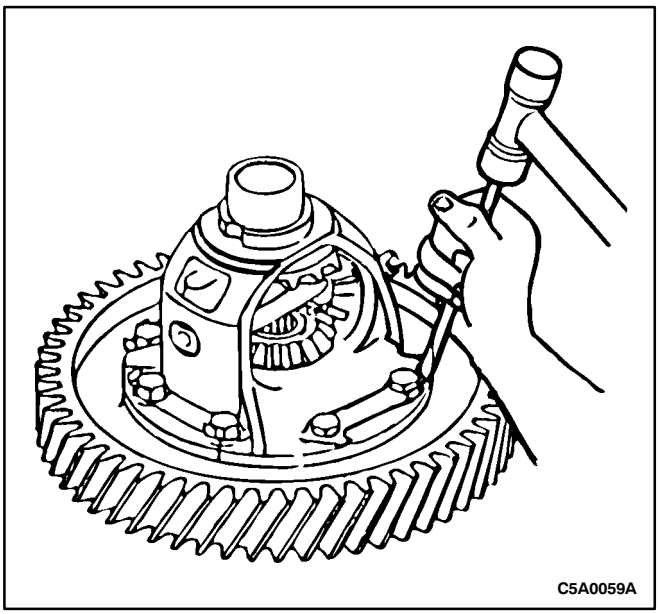

6. Bend the differential ring gear bolt lock plate tabs in the locked position.

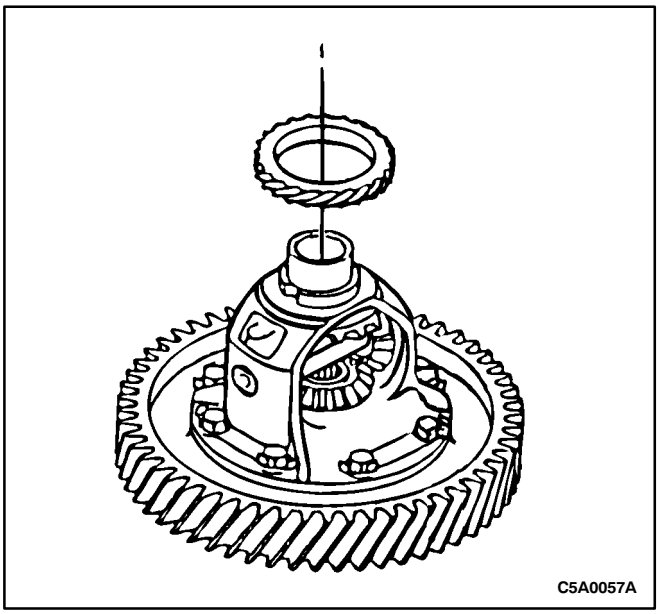

WARNING: USE CAUTION WHEN INSTALLING THE SPEEDOMETER DRIVE GEAR OR PERSONAL INJURY MAY RESULT.

7. Install the speedometer drive gear.

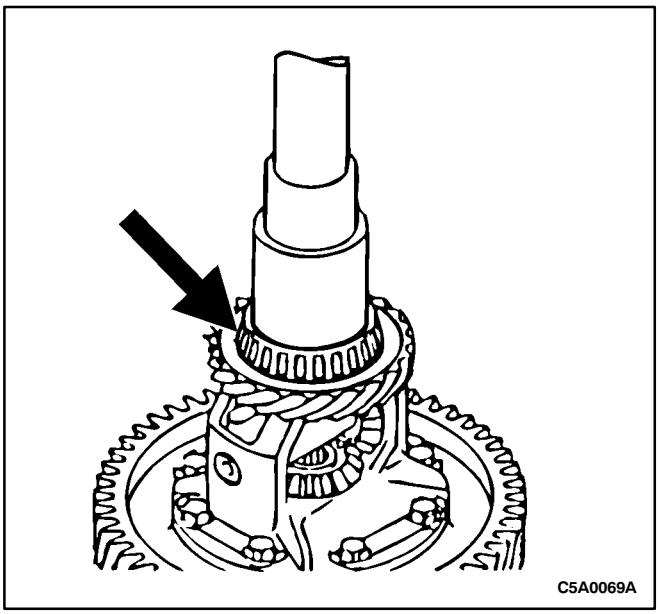

8. Using a press, press the outer bearing onto the differential case.

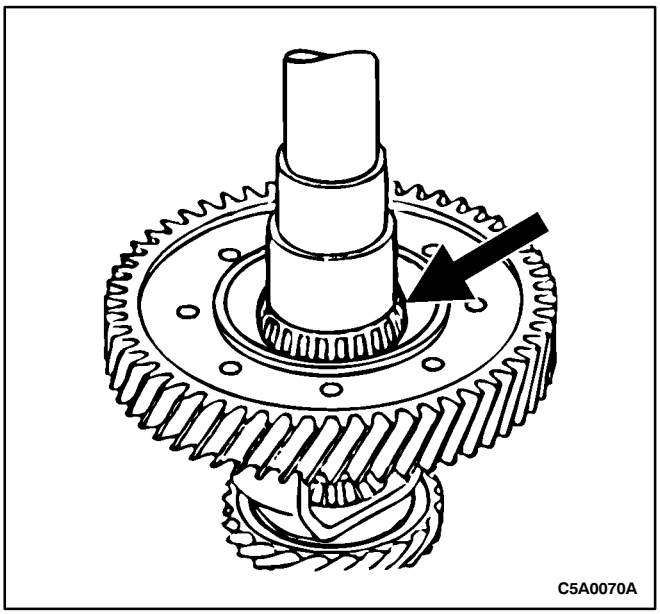

9. Using a press, press the inner bearing onto the differential case.

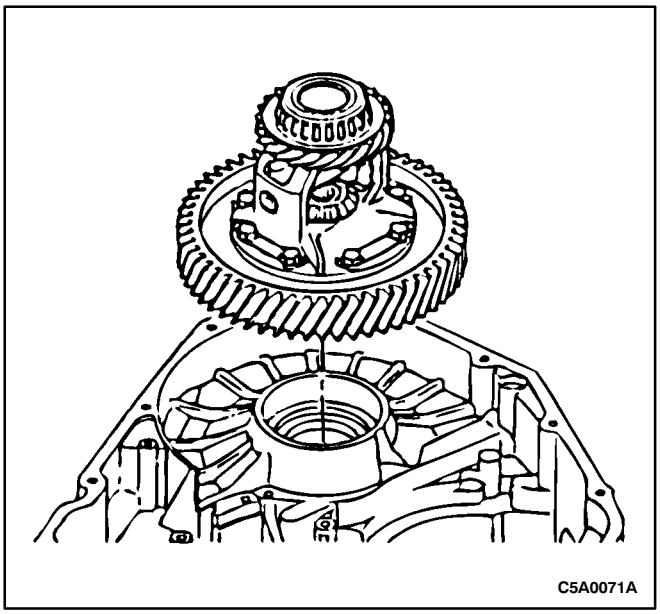

10. Install the differential assembly in the transaxle case.

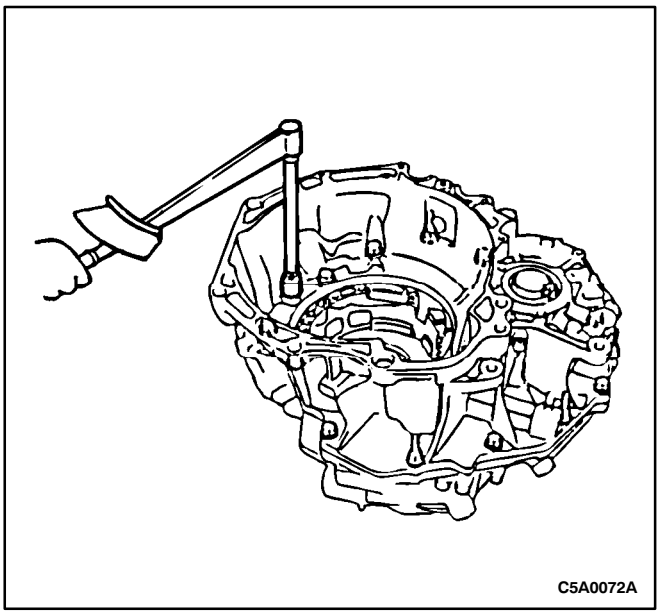

Notice: Tighten the bolts evenly and gradually.

11. Apply sealer to the transaxle case and install the transaxle housing.

Tighten

Tighten the bolts to 23-35 N•m (17-26 lb-ft).

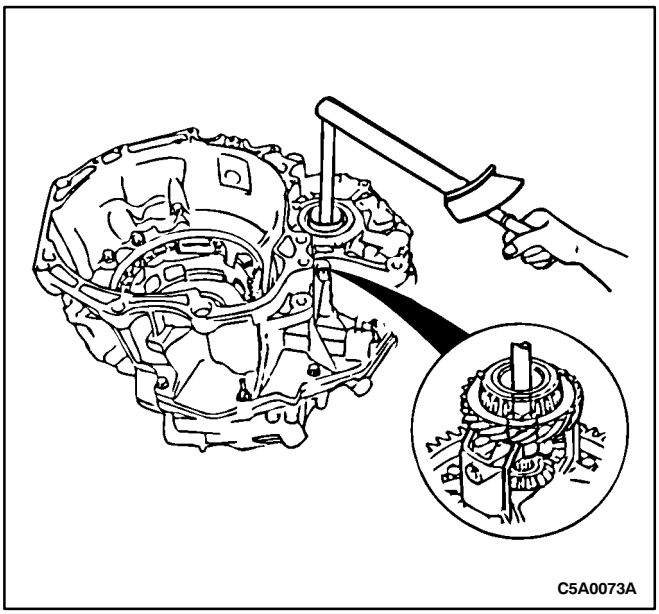

12. Using adapter KM-J-28644, measure the starting preload.
    - Rotate the differential in both directions to seat the bearing.

Preload	
New Bearing	.686-1.18 N•m (6-10 lb-in)
Reused Bearing	.343-.588 N•m (3-5 lb-in)

- If the preload is not within specifications, remove the differential assembly. Remove the outer bearing race and select the correct adjusting shim. If the preload is below specifications, install a thicker shim. If the preload is above specifications, install a thinner shim.
- Install selected shim, reinstall differential assembly and recheck preload.

Part Number	Thickness mm (in)
5040 037 021Z	1.00 (.039)
5040 037 022W	1.05 (.041)
5040 037 023T	1.10 (.043)
5040 037 024P	1.15 (.045)
5040 037 025L	1.20 (.047)
5040 037 026H	1.25 (.049)
5040 037 027E	1.30 (.051)
5040 037 028B	1.33 (.052)
5040 037 029Y	1.36 (.053)
5040 037 030E	1.39 (.054)
5040 037 031B	1.42 (.055)
5040 037 032Y	1.45 (.057)
5040 037 033V	1.48 (0.58)
5040 037 034S	1.51 (.059)
5040 037 035N	1.54 (.060)
5040 037 036K	1.57 (.061)
5040 037 037G	1.60 (.062)
5040 037 038D	1.65 (.064)
5040 037 039A	1.70 (.066)
5040 037 040G	1.75 (.068)
5040 037 041D	1.80 (.070)
5040 037 042A	1.85 (.072)
5040 037 043X	1.90 (.074)

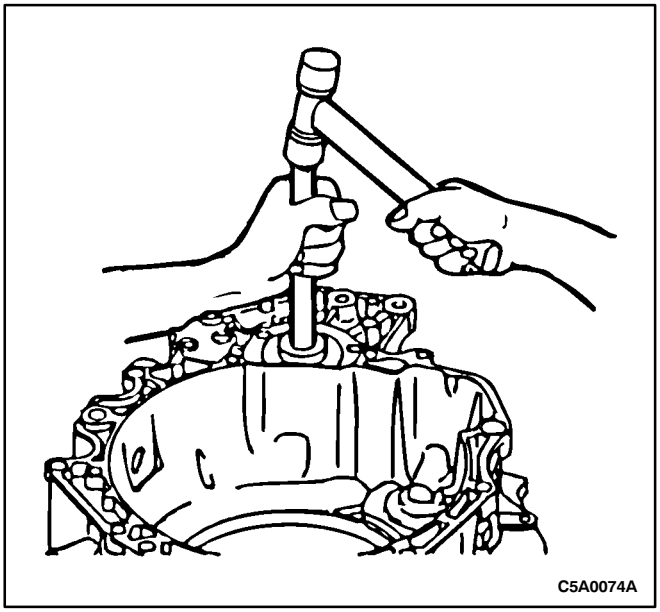

Notice: The distance from the outer edge of the seal to the transaxle housing should be 0.500 mm (0.019 in).

Notice: Apply Transjel Assembly Lubricant J-36850 to the oil seal lip.

13. Using oil seal installer KM-674, install a new oil seal into the transaxle housing.

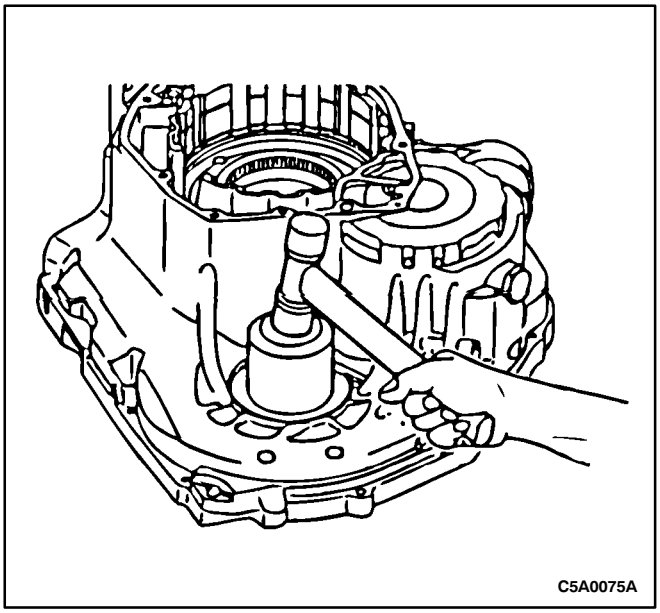

Notice: Install the oil seal until the seal touches the transaxle case.

Notice: Apply Transjel Assembly Lubricant J-36850 to the oil seal lip.

14. Using oil seal installer KM-674, install a new oil seal into the transaxle case.

VALVE BODY ASSEMBLY

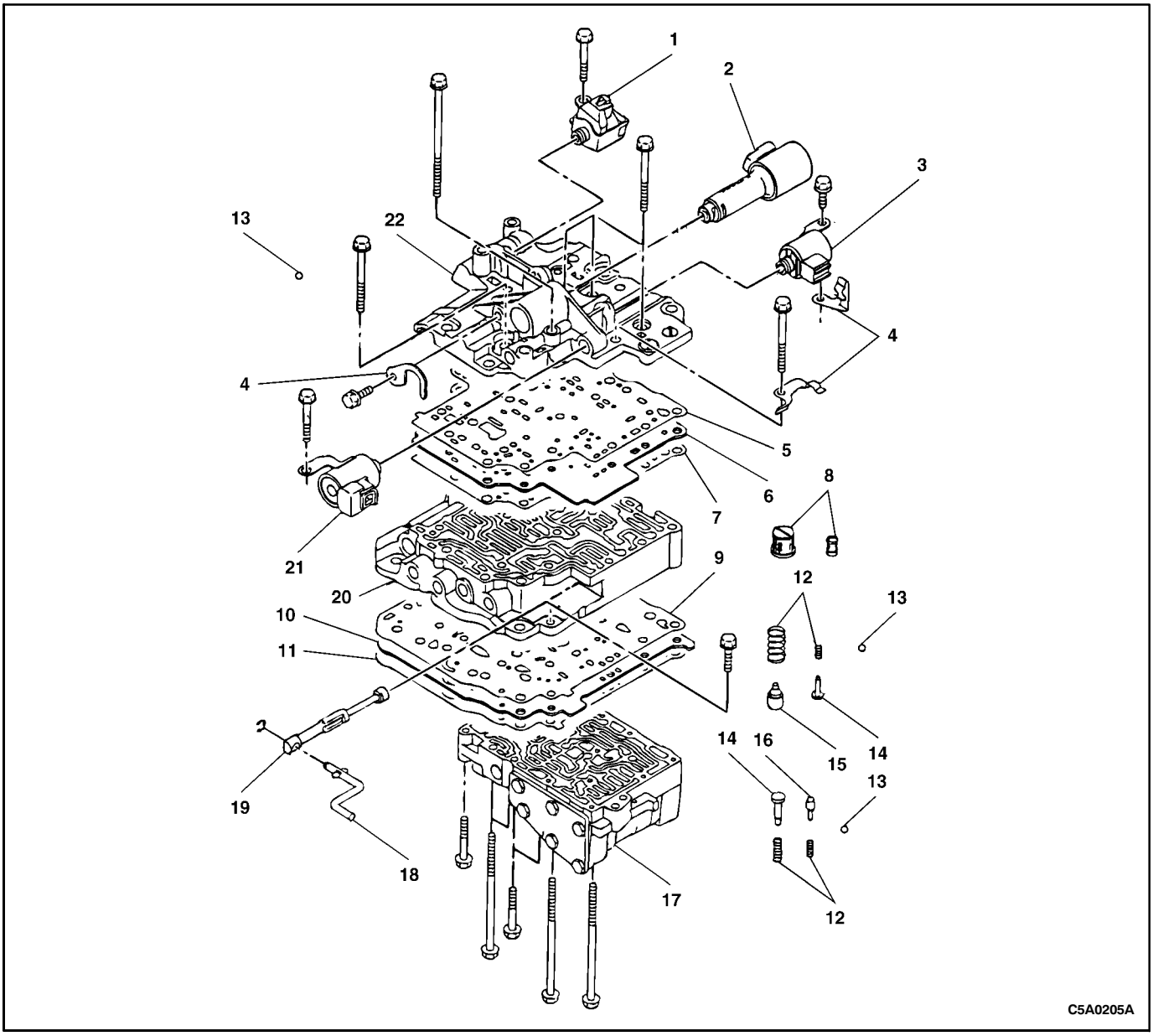

1. Lockup Solenoid
2. Linear Solenoid
3. Shift Solenoid 1 (SS1)
4. Wire Harness Clamp
5. Upper Valve Body Gasket
6. Upper Valve Body Separator Plate
7. Center Valve Body Gasket (No. 1)
8. Oil Strainer
9. Center Valve Body Gasket (No.2)
10. Center Valve Body Separator Plate
11. Lower Valve Body Gasket
12. Spring(s)
13. Check Ball
14. Check Valve
15. Bypass Valve
16. Pressure Relief Valve
17. Lower Valve Body
18. Manual Valve Rod
19. Manual Valve
20. Center Valve Body
21. Shift Solenoid 2 (SS2)
22. Upper Valve Body

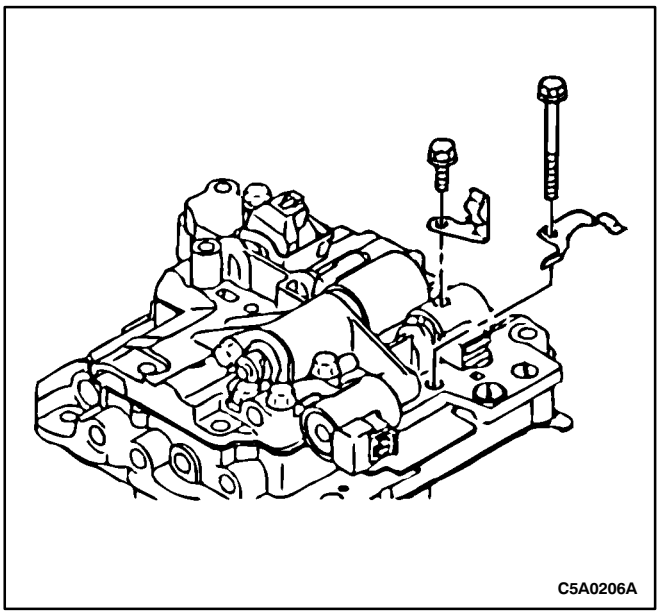

Disassembly Procedure

1. Remove the wire harness clamps.

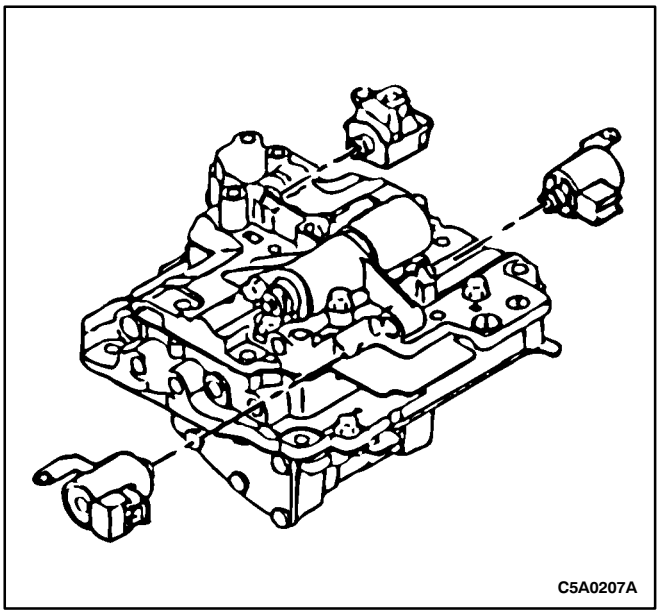

2. Remove the shift and lockup solenoids.

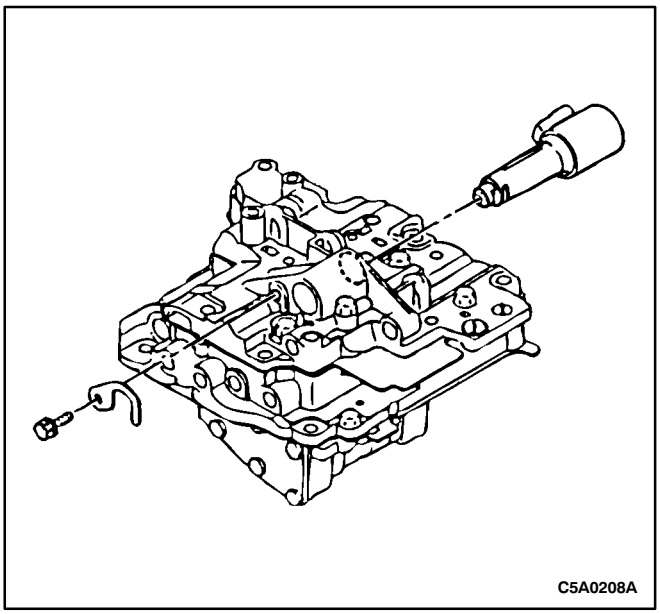

3. Remove the linear solenoid and the wire harness clamp.

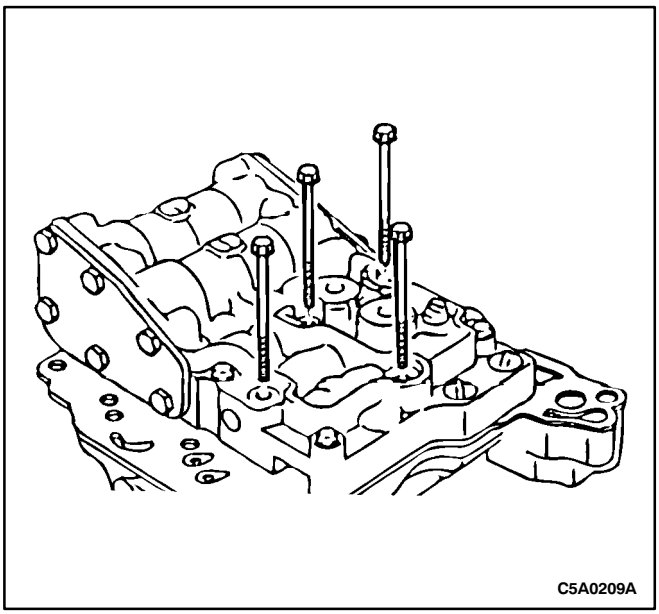

4. Turn the valve body assembly over and remove the four bolts from the lower valve body.

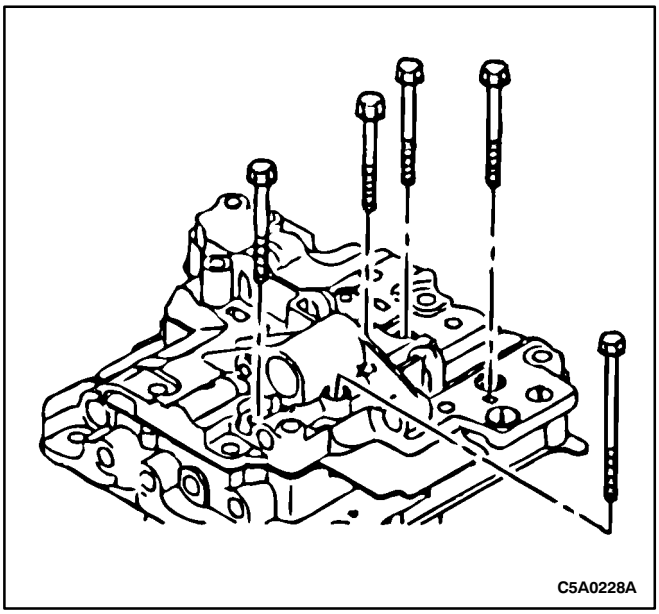

5. Turn the valve body assembly over and remove the five bolts from the upper valve body.

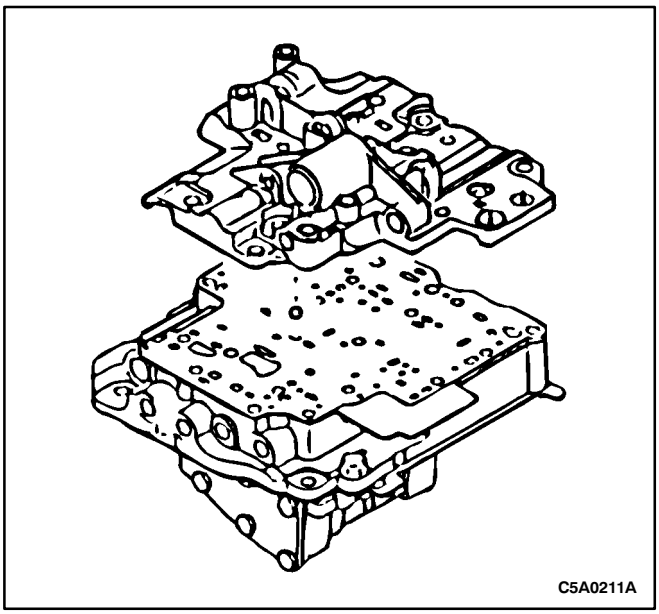

6. Lift off the upper valve body. Remove the check ball.

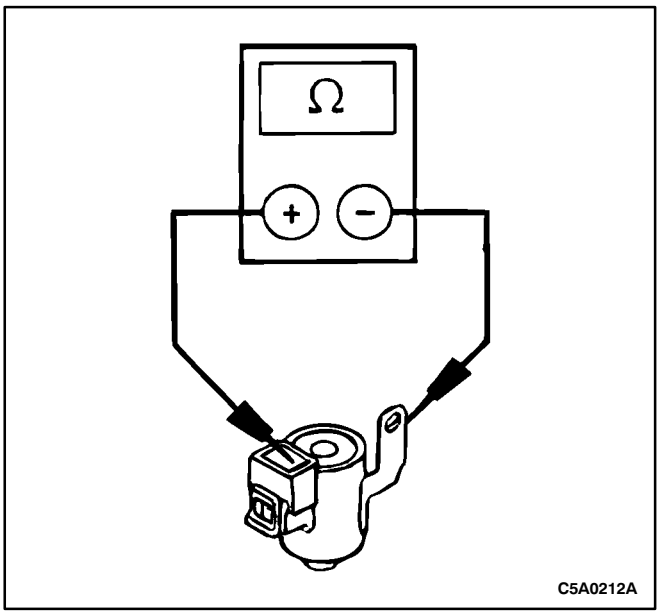

7. Inspect the shift solenoids and the lockup solenoid. Replace the solenoids if they are not within specifications.
   - Using an ohmmeter, check the resistance between the solenoid terminal and the solenoid body. The standard resistance for shift solenoids is 12-16 ohms. The standard resistance for the lockup solenoid is 11-15 ohms.
   - Apply battery voltage to the solenoids. An operation noise should be heard.

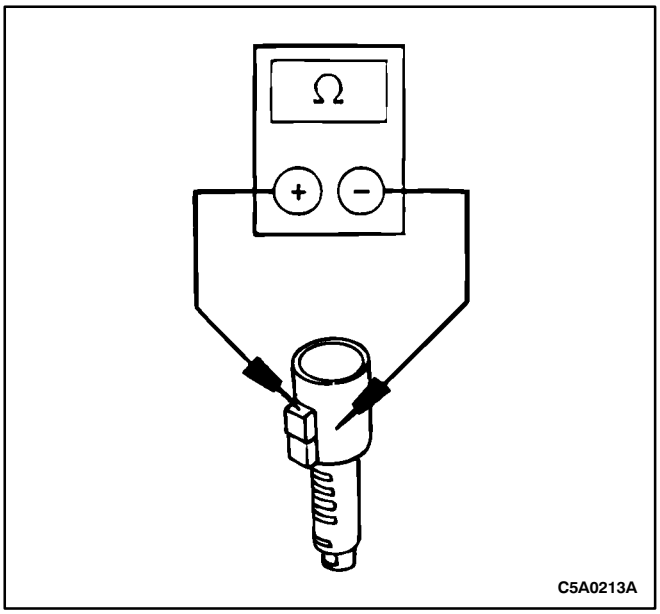

8. Inspect the linear solenoid. If the solenoid is not within specifications, replace it.
   - Using an ohmmeter, check the resistance between the solenoid terminals. The standard resistance is -3.6 ohms.

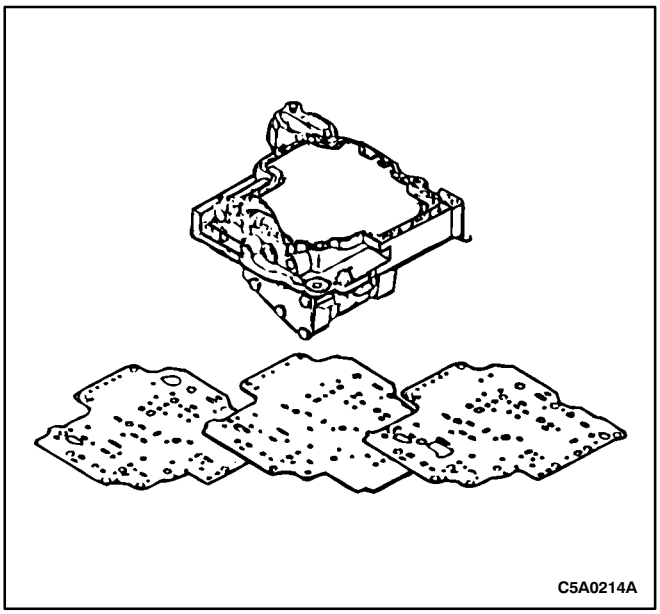

Notice: Discard the valve body gaskets.

9. Remove the upper valve body gasket, the upper valve body separator plate and the center valve body gasket.

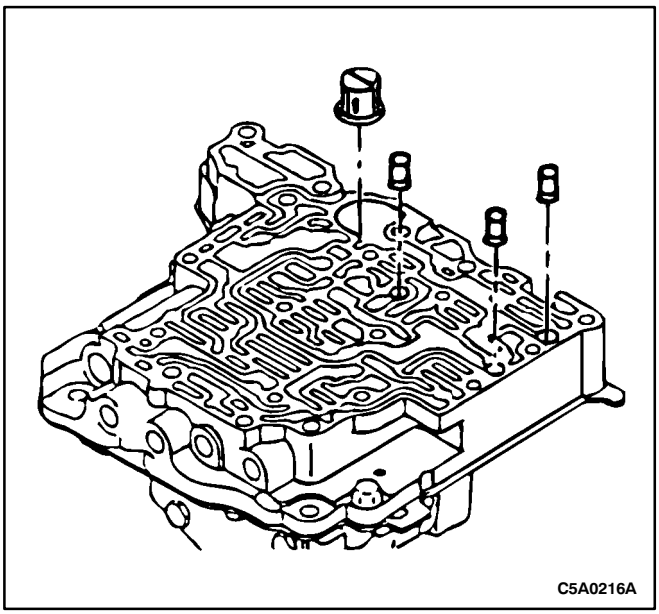

10. Remove the oil strainers from the center valve body.

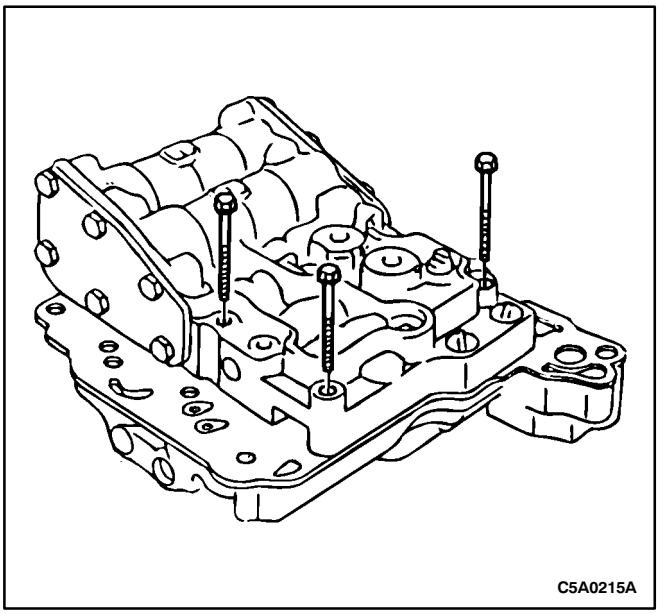

11. Remove the three bolts from the lower valve body.

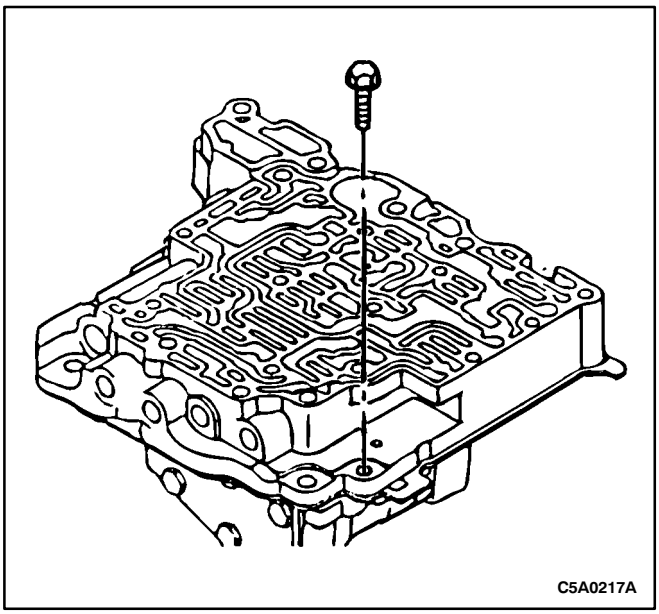

Notice: Hold the gaskets and separator plate to the center valve body and remove as an assembly.

12. Turn the valve body over and remove the remaining bolt. Separate the center valve body from the lower valve body.

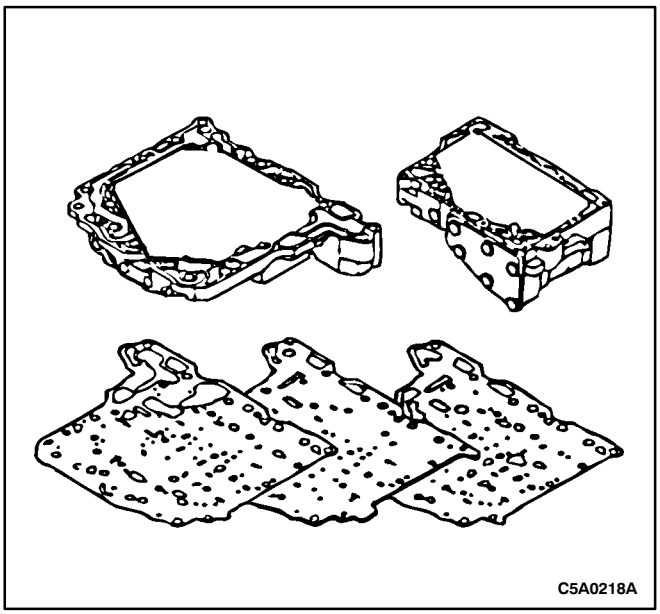

Notice: Discard the valve body gaskets.

13. Separate the valve body gaskets and separator plate.

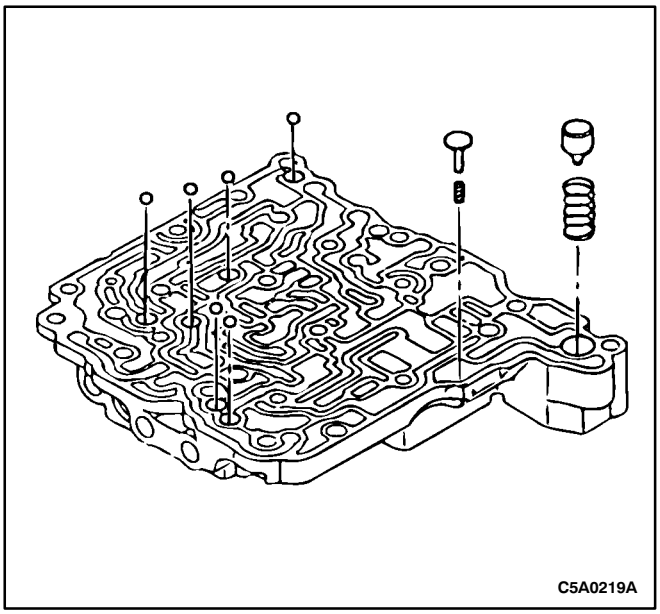

14. Remove the bypass valve, the check valve, springs and the check balls from the center valve body.

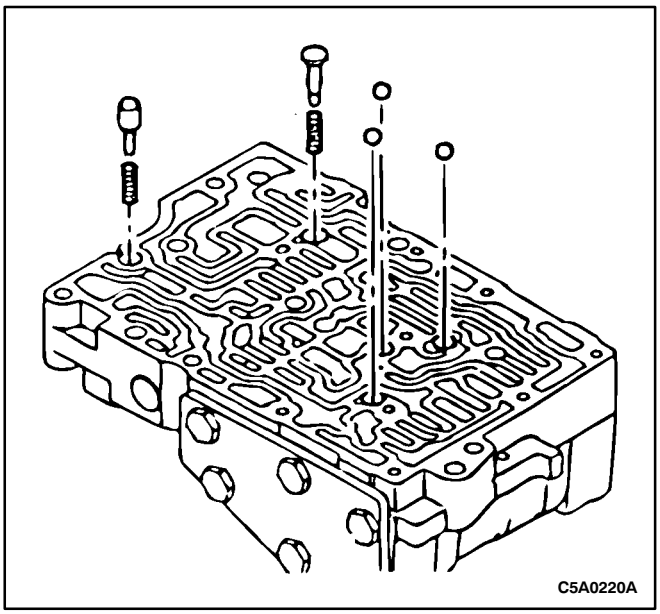

15. Remove the check valve, the pressure relief valve, springs and check balls from the lower valve body.

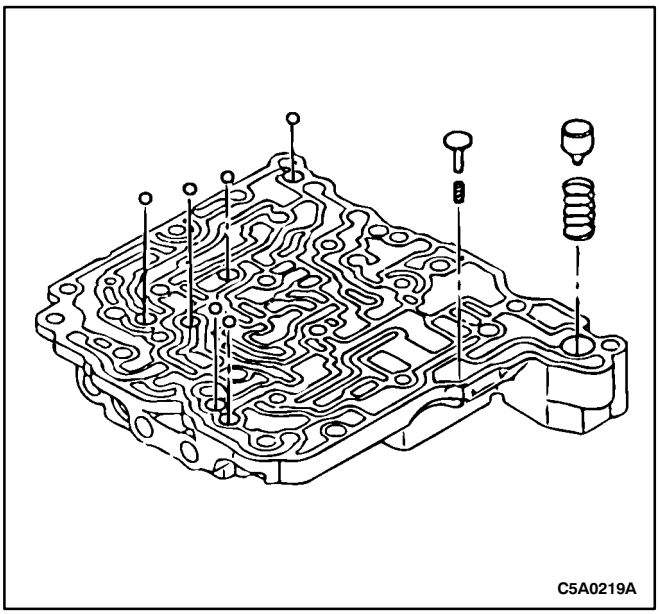

Assembly Procedure

Notice: Coat the valves and springs with TOTAL FLUID HX prior to assembly.

1. Install the bypass valve, the check valve, springs and the check balls in the center valve body.

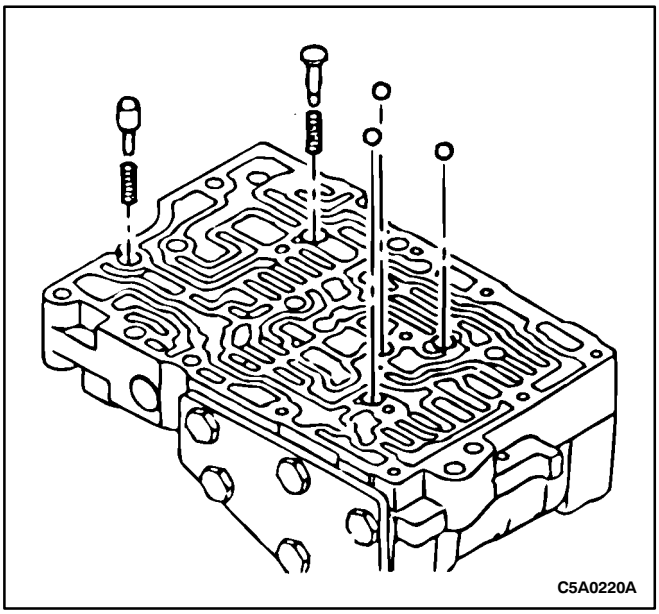

2. Install the check valve, the pressure relief valve, springs and check balls in the lower valve body.

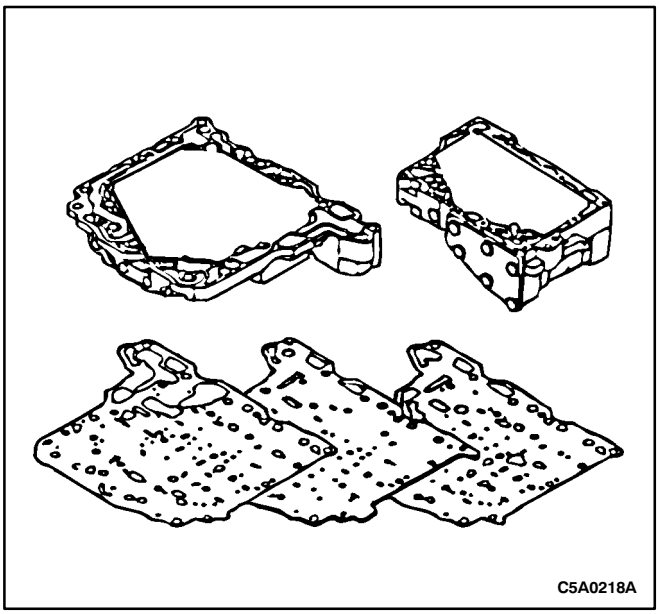

3. Install a new center valve body gasket, a center valve body separator plate and a new lower valve body gasket on the center valve body.
   - Place the center valve body onto the lower valve body. Hold the center valve body, gaskets and plate securely so they do not separate.

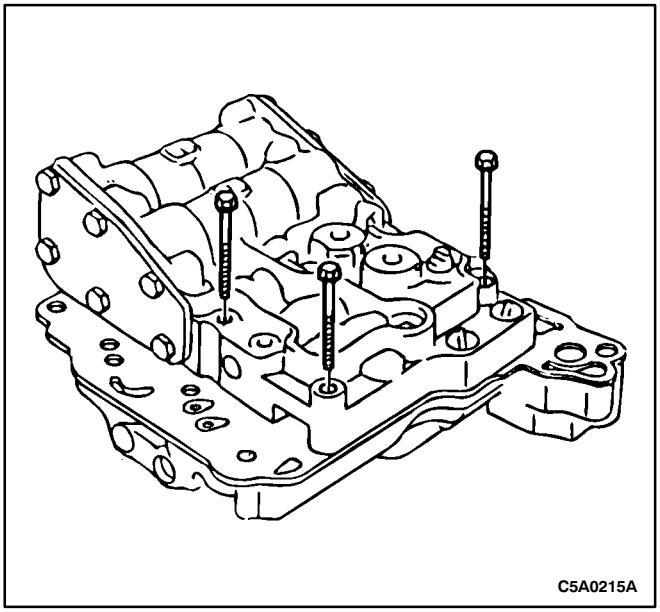

4, Install the three bolts in the lower valve body. Do not tighten the bolts at this time.

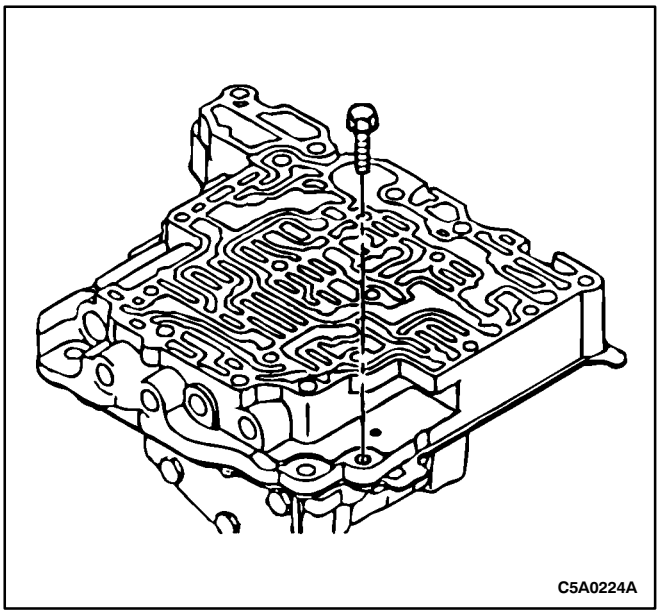

5. Turn the valve body over and install the bolt. Do not tighten the bolt at this time.

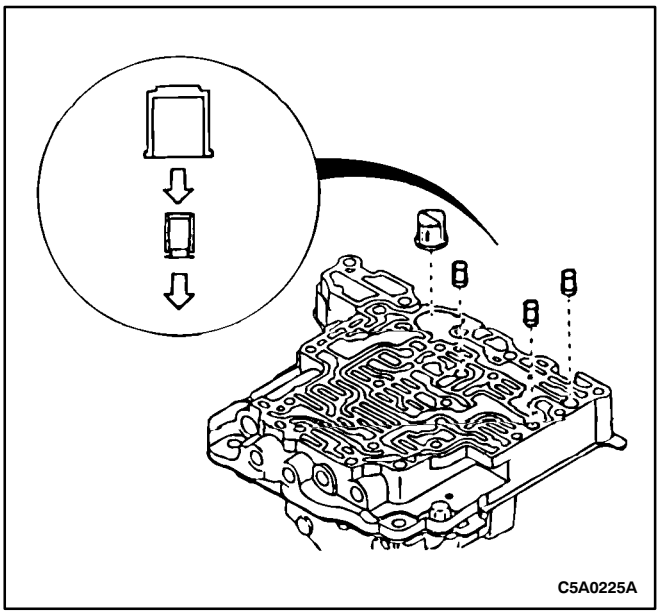

Notice: Coat the oil strainers with TOTAL FLUID HX prior to assembly.

6. Install the oil strainers into the center valve body.

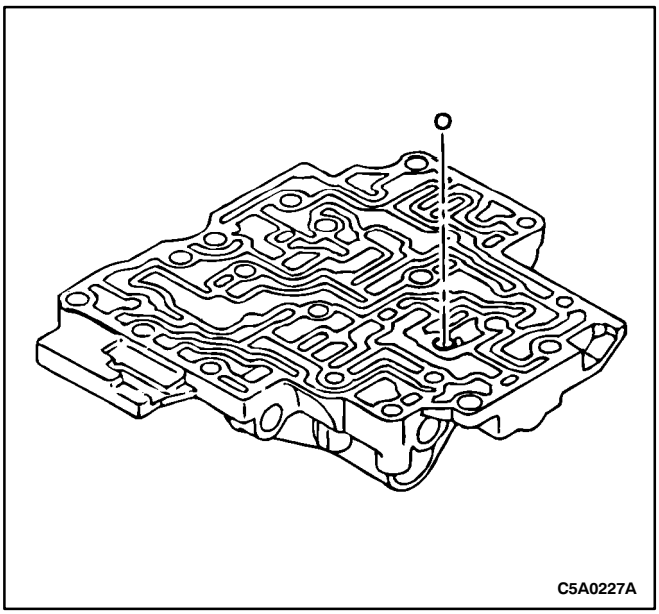

7. Install the check ball in the upper valve body.

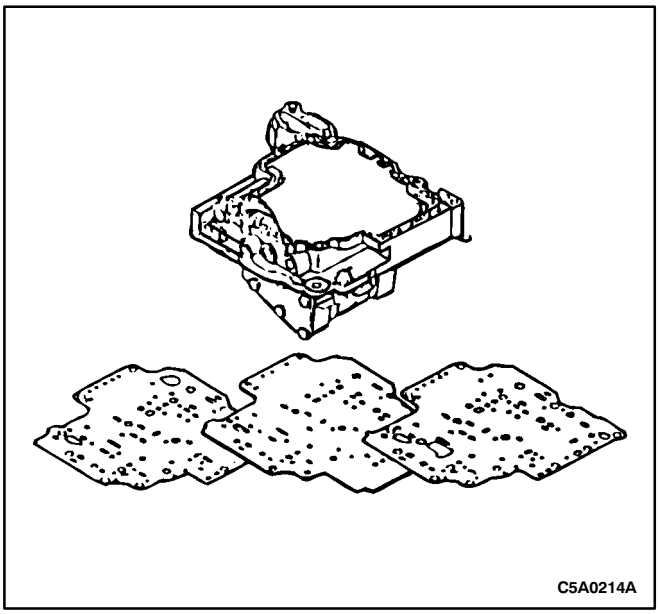

8. Install a new center valve body gasket, a center valve body separator plate and a new upper valve body gasket.
   - Place the upper valve body onto the center valve body. Hold the upper valve body, gaskets and plate securely so they do not separate.

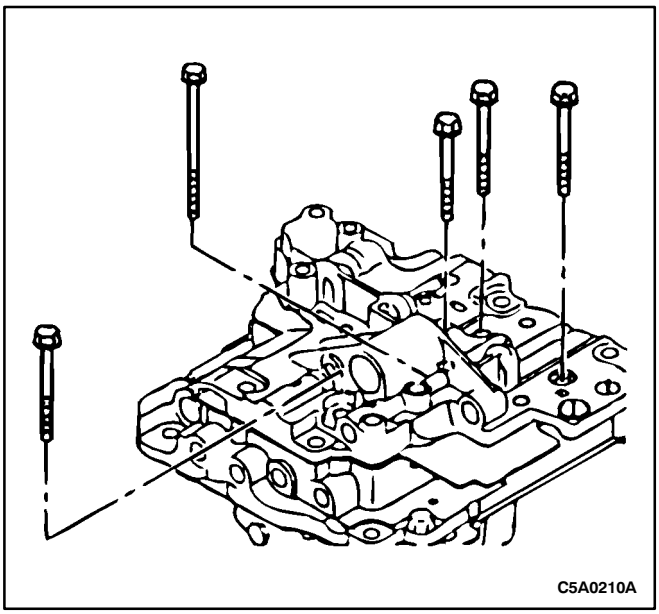

9. Install the five bolts in the upper valve body. Do not tighten at this time.
   - Three 50 mm (1.9 in) bolts
   - One 45 mm (1.8 in) bolt
   - One 65 mm (2.5 in) bolt

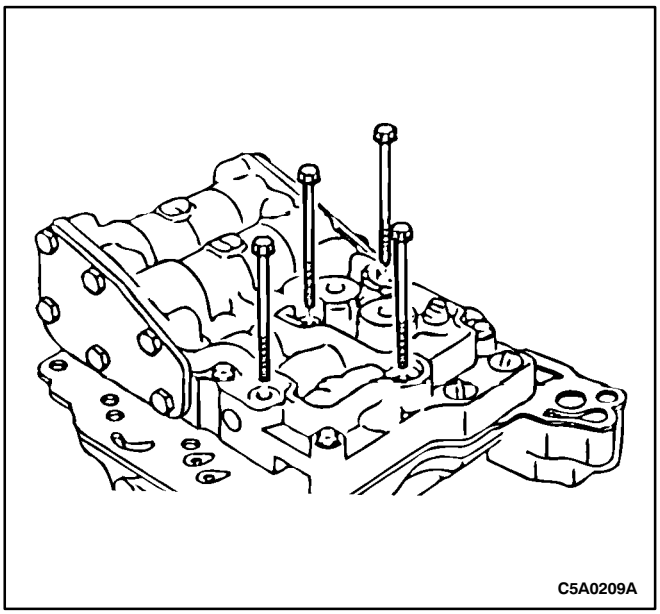

10. Turn the valve body over and install the four bolts. Do not tighten the bolt at this time.
    - 65 mm (2.5 in) bolts

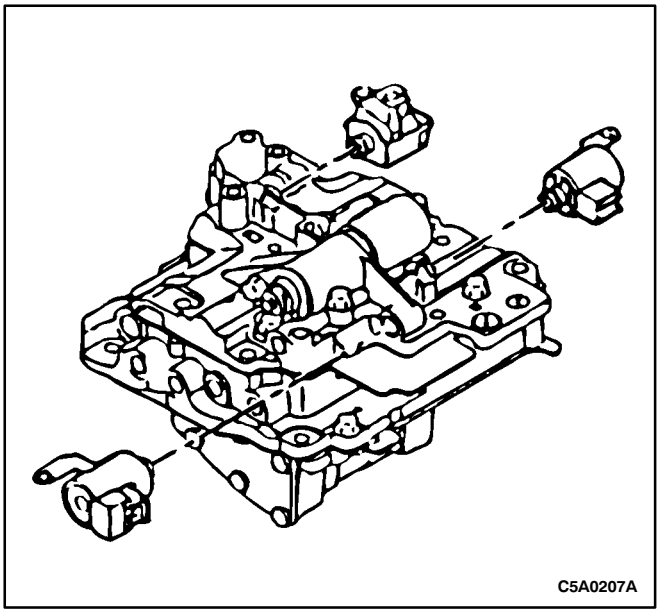

Notice: Apply TOTAL FLUID HX to the solenoid O-ring.

11. Install the shift and lockup solenoids.

Tighten

Tighten the solenoid bolts to 6-7 N•m (52-65 lb-in).

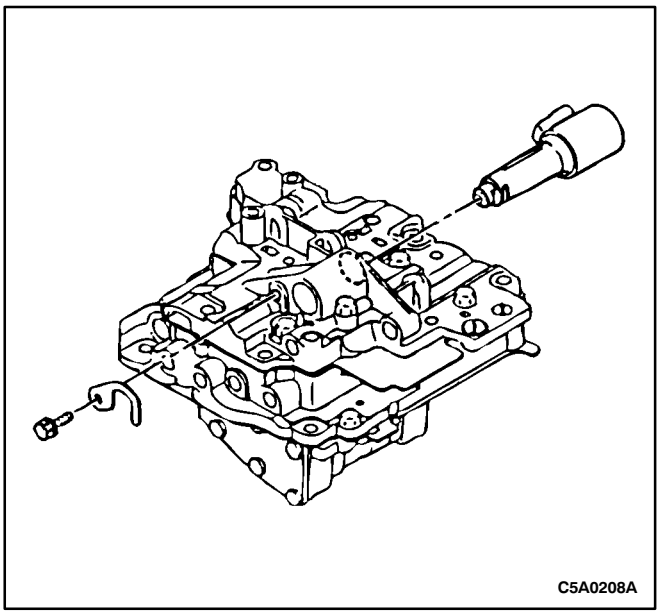

Notice: Apply TOTAL FLUID HX to the solenoid O-ring.

12. Install the linear solenoid and the wire harness clamp.

Tighten

Tighten the solenoid bolt to 6-7 N•m (52-65 lb-in).

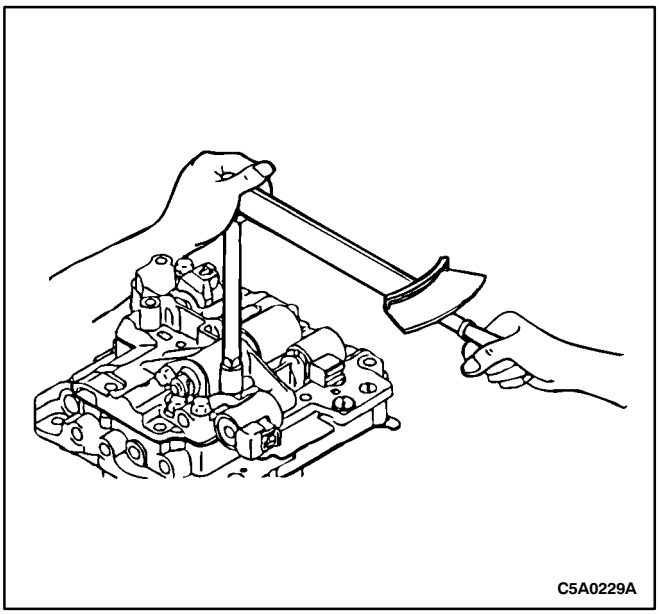

Notice: Tighten the bolts evenly and gradually.

13. Tighten the 14 upper and lower valve body bolts.

Tighten

Tighten the bolts to 6-7 N•m (52-65 lb-in).

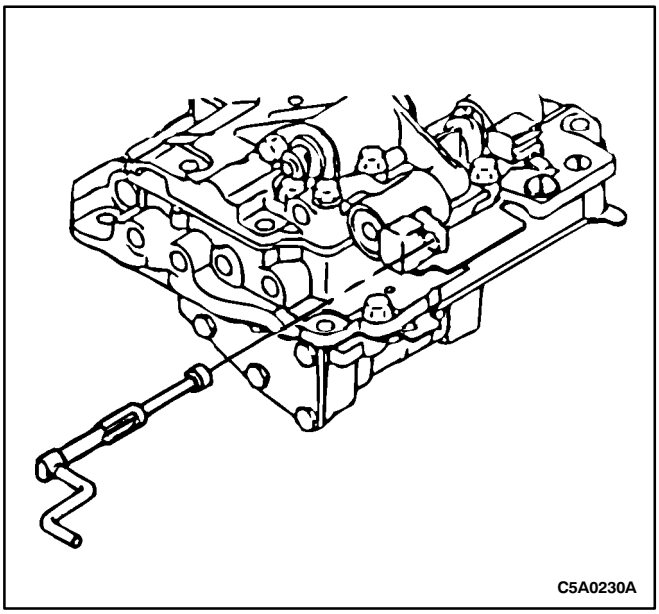

Notice: Coat the manual valve with TOTAL FLUID HX prior to assembly.

14. Install the manual valve.

UPPER VALVE BODY

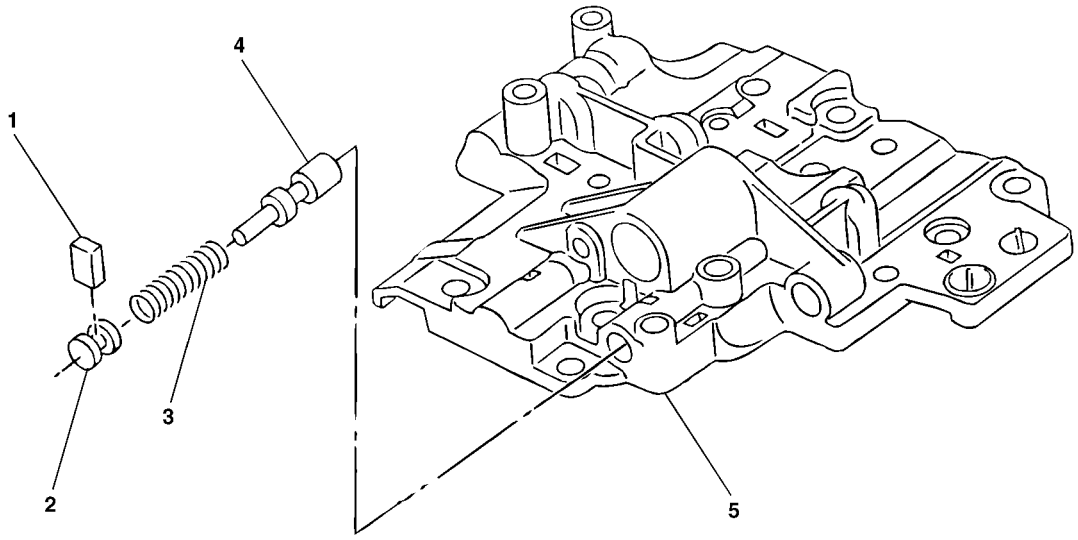

C5A0231A

1. Key
2. Retainer
3. Valve Spring
4. Solenoid Modulator Valve
5. Upper Valve Body

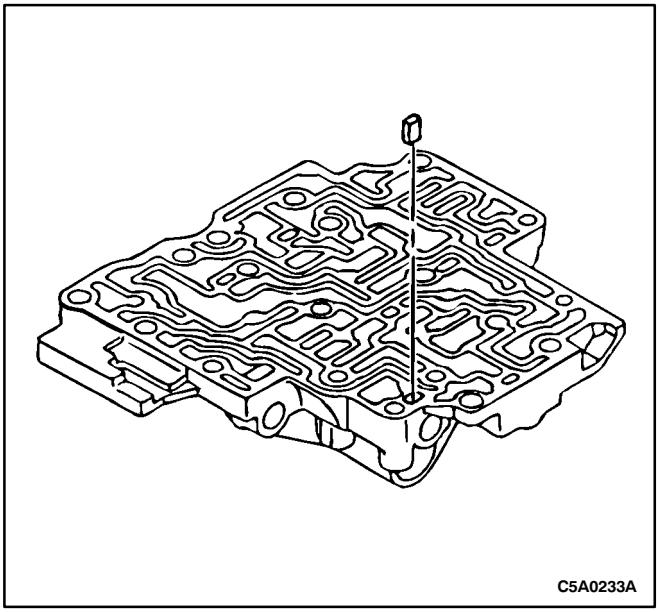

1. Remove the key

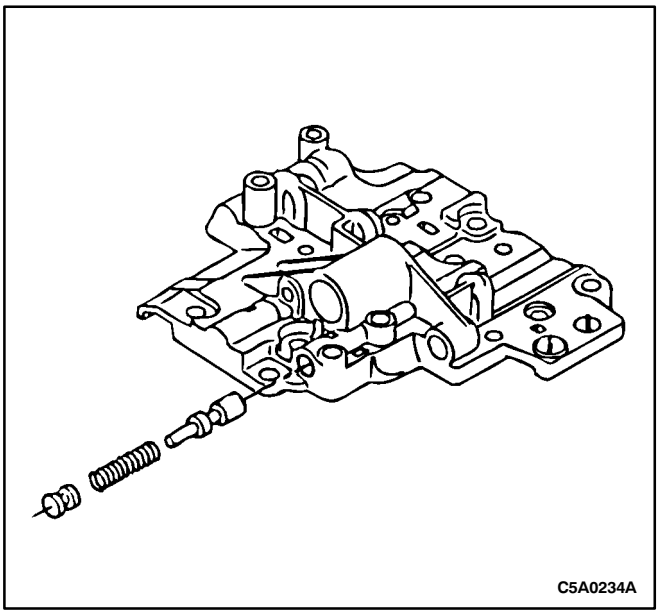

2. Remove the retainer, valve spring and the solenoid modulator valve.

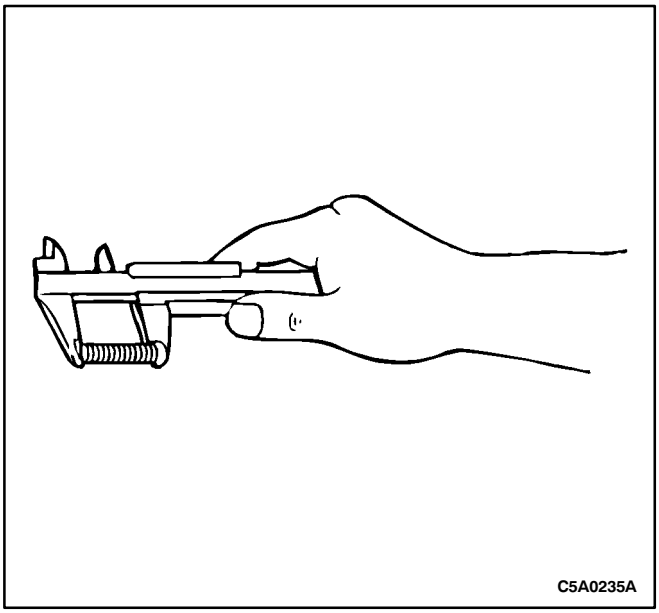

3. Inspect the valve spring.
   - Using vernier calipers, measure the free length and outer diameter of the spring. If it does not meet specifications, replace it.

Free Length	Outer Diameter
28.53mm (1.1 in)	8.0mm (0.314 in)

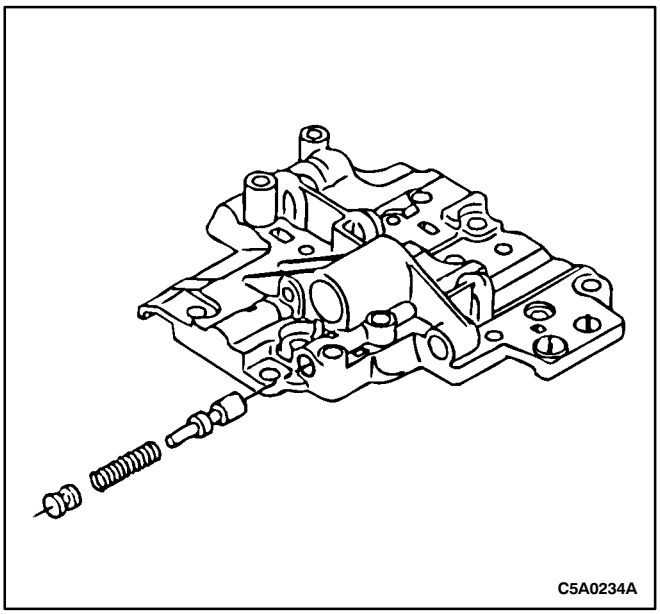

Assembly Procedure

Notice: Inspect the valve for damage or wear, replace if necessary. The valve should fit snugly in the bore.

Notice: Coat the valve and spring with TOTAL FLUID HX prior to assembly.

1. Install the solenoid modulator valve, valve spring and the valve retainer.

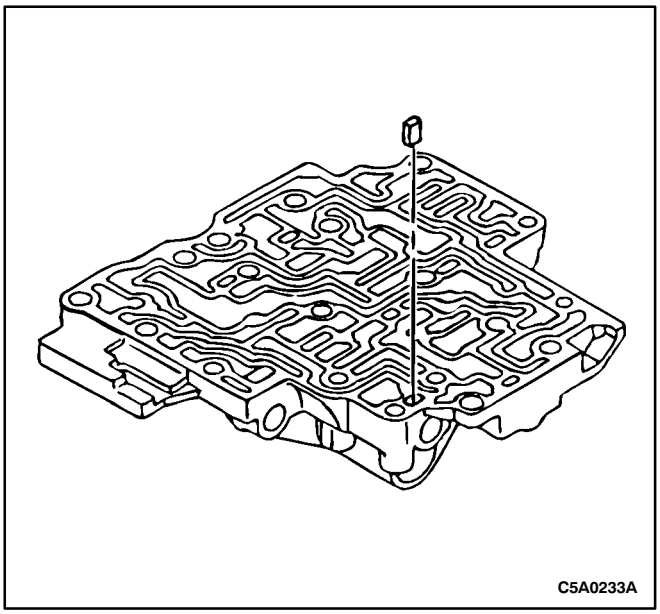

2. Install the key.

CENTER VALVE BODY

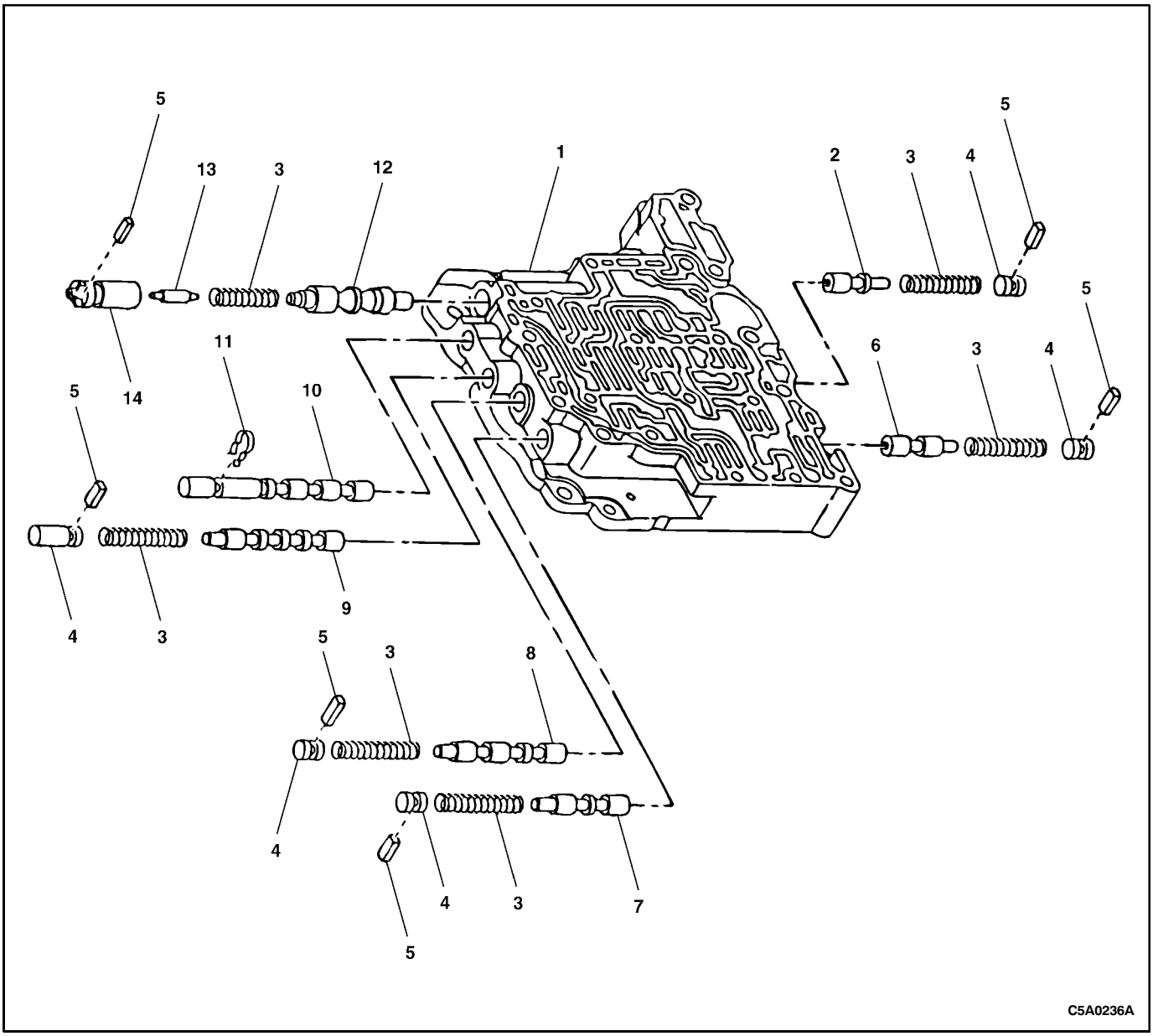

1. Center Valve Body
2. Coast (LockUp) Modulator Valve
3. Valve Sprin
4. Retainer
5. Key
6. Clutch Modulator Valve
7. 2-3 Shift Valve
8. 3-4 Shift Valve
9. 1-2 Shift Valve
10. Neutral Control Valve
11. Snap Ring Retainer
12. Primary Regulator Valve
13. Primary Regulator Valve Plunger
14. Primary Regulator Valve Plunger Sleeve

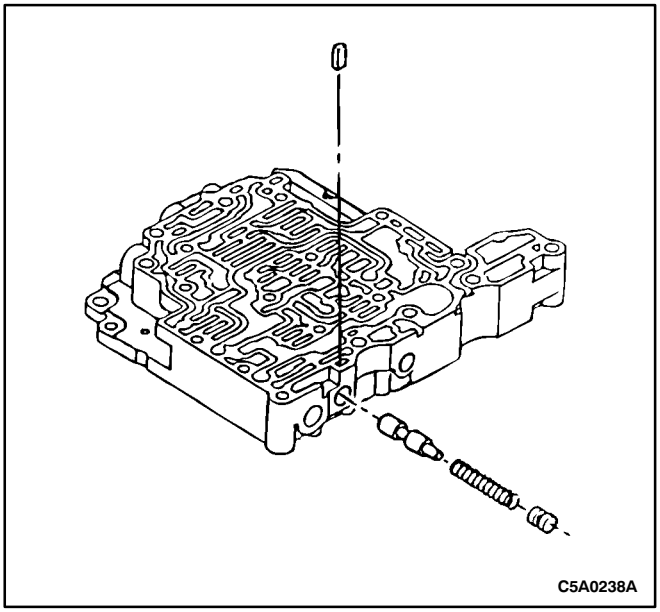

1. Remove the key, the retainer, the valve spring and the clutch modulator valve.

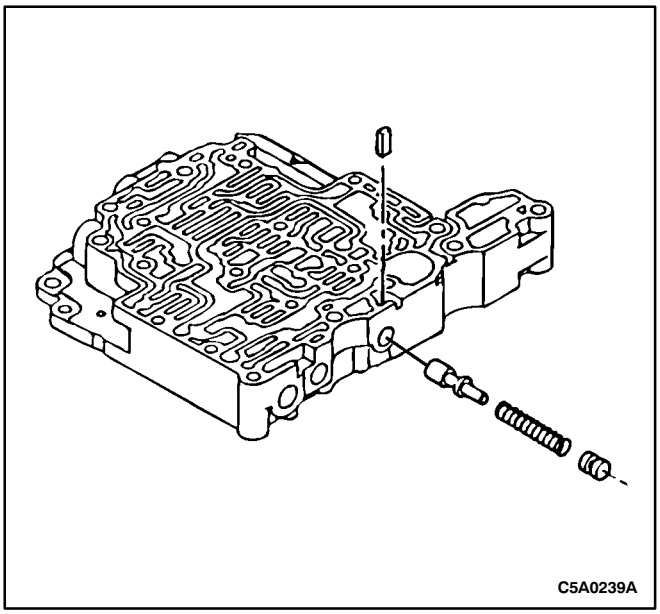

2. Remove the key, the retainer, the valve spring and the coast (lockup) modulator valve.

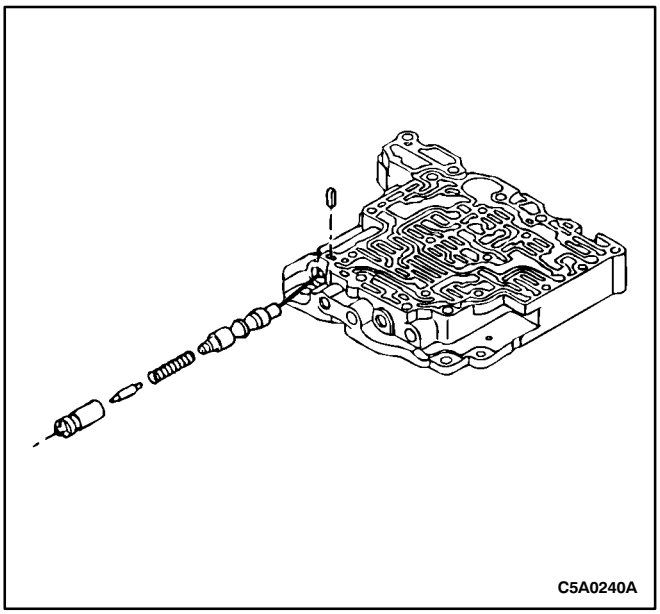

3. Remove the key, the primary regulator valve plunger sleeve, the primary regulator valve plunger, valve spring, and the primary regulator valve.

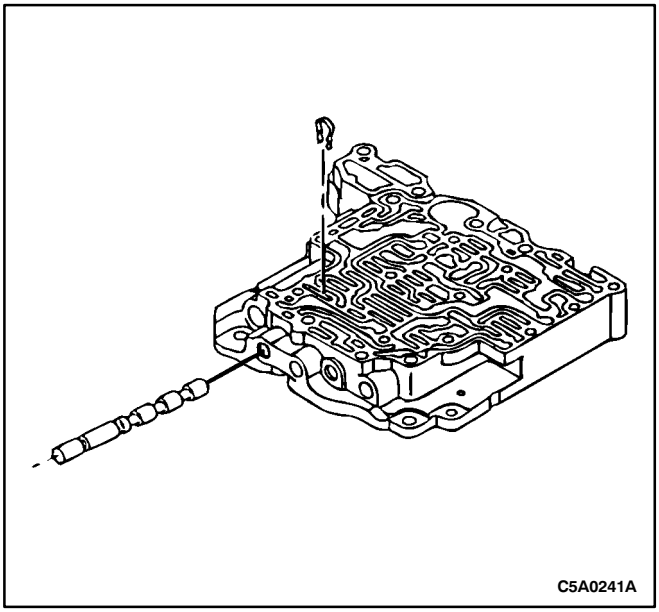

4. Remove the snap ring retainer and the neutral control valve.

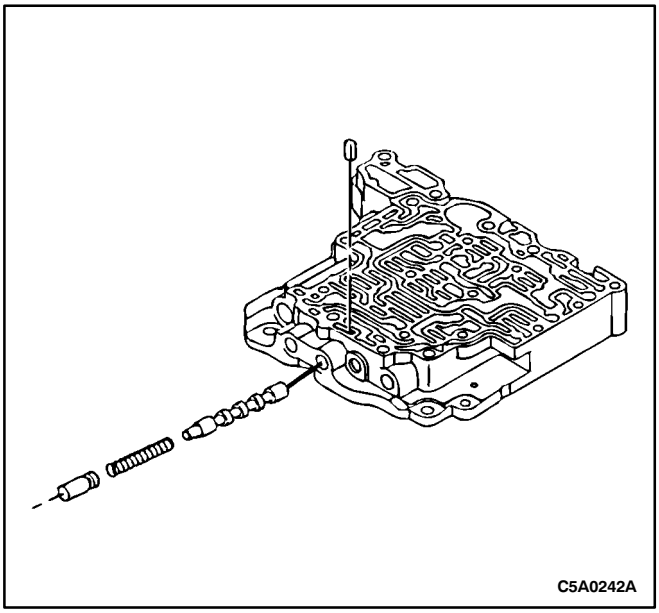

5. Remove the key, the retainer, the valve spring and the 1-2 shift valve.

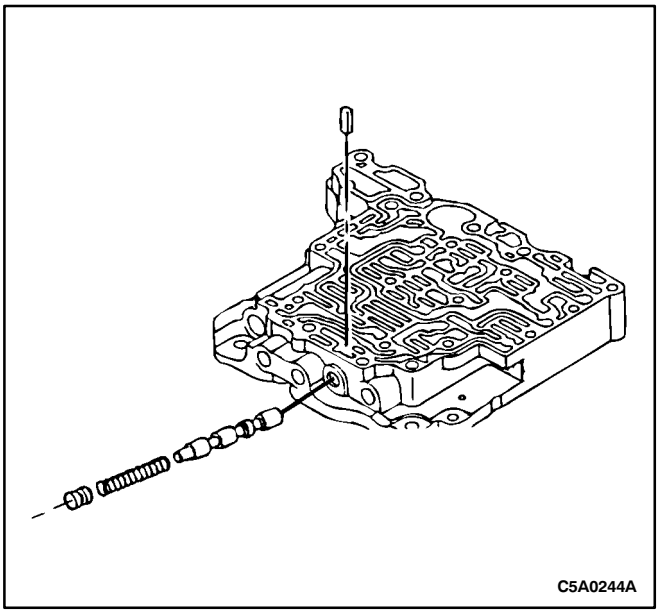

6. Remove the key, the retainer, the valve spring and the 3-4 shift valve.

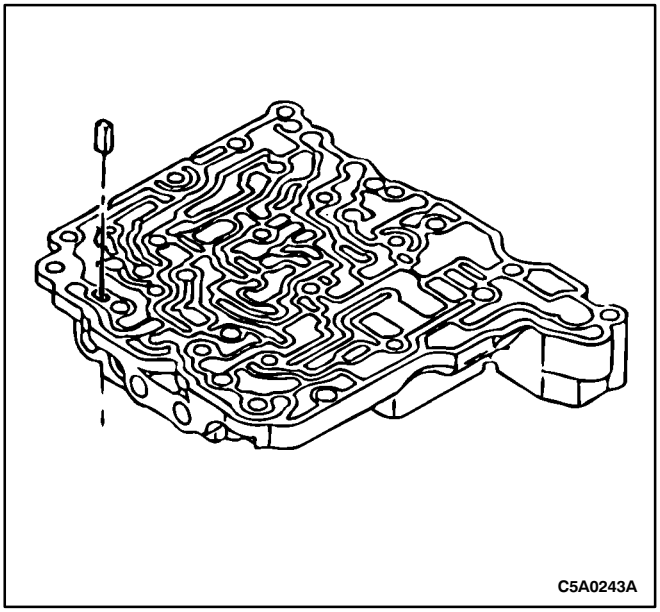

7. Remove the key.

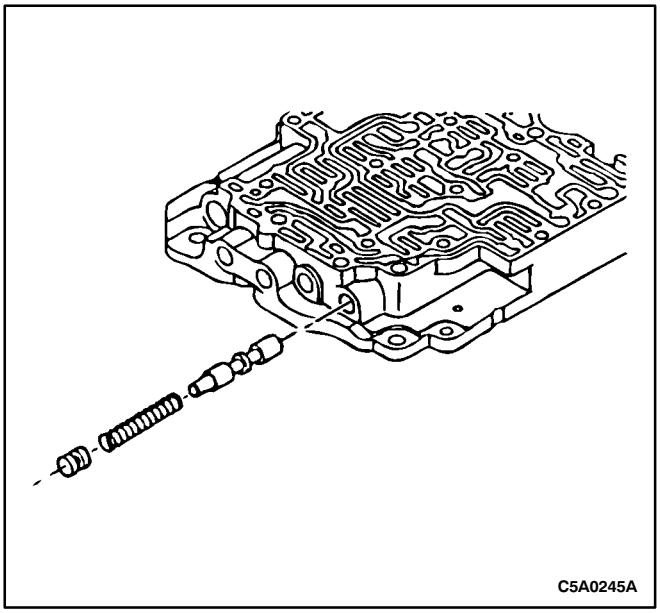

8. Remove the retainer, the valve spring and the 2-3 shift valve.

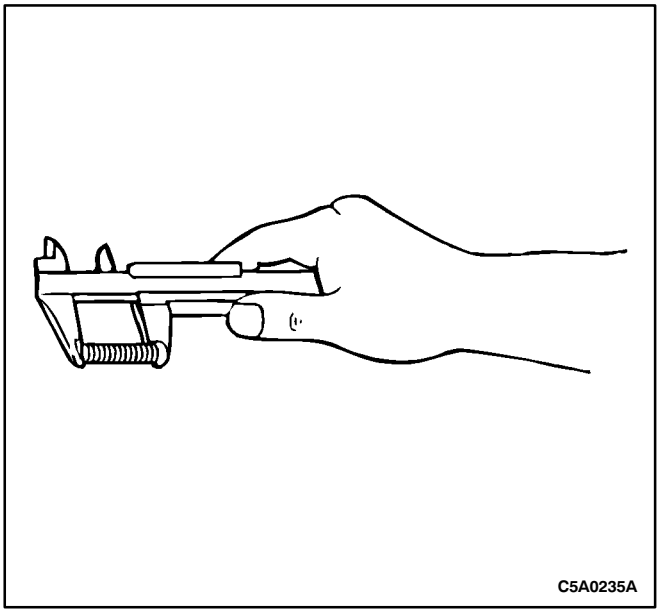

9. Inspect the valve springs.
   - Using vernier calipers, measure the free length and outer diameter of the spring. If it does not meet specifications, replace it.

Valve	Valve Spring Free Length mm (in)	Valve Spring Outer Diameter mm (in)
Primary Regulator	29.72 (1.2)	10.5 (0.41)
1-2 Shift	33.95 (1.3)	8.2 (0.32)
2-3 Shift	33.95 (1.3)	8.2 (0.32)
3-4 Shift	33.95 (1.3)	8.2 (0.32)
Coast (Lockup) Modulator	22.42 (0.88)	8.0 (0.31)
Clutch Modulator	22.78 (0.90)	8.3 (0.33)

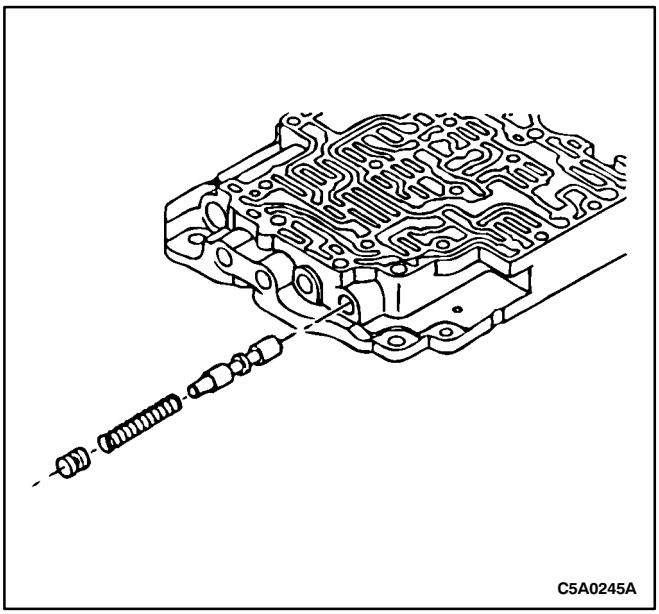

Assembly Procedure

Notice: Inspect the valve for damage or wear. Replace if necessary.

Notice: The valve should fit snugly in the bore.

Notice: Coat the valve, spring and retainer with TOTAL FLUID HX prior to assembly.

1. Install the 2-3 shift valve, the valve spring and the retainer.

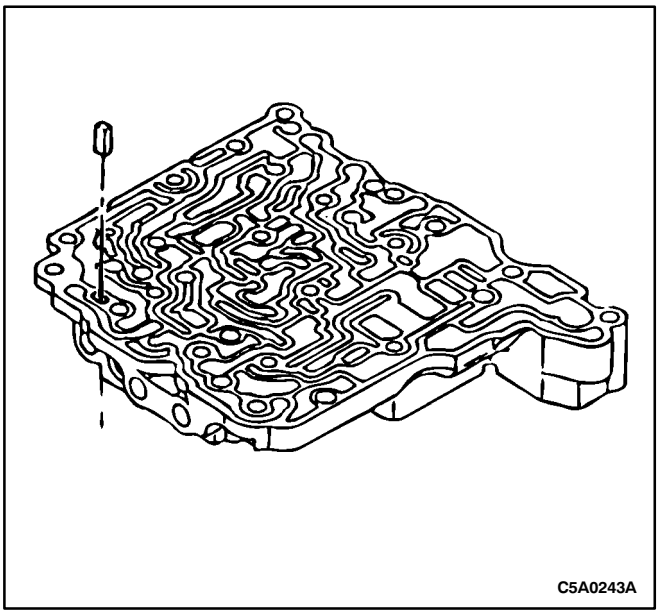

2. Install the key.

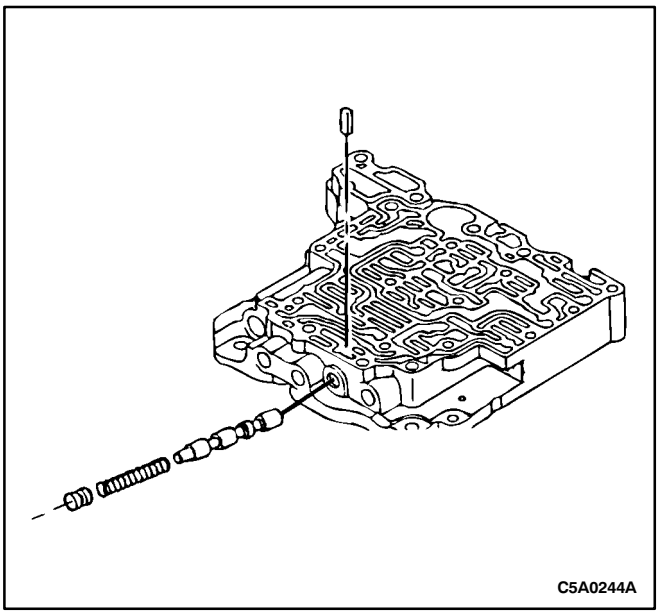

Notice: Inspect the valve for damage or wear. Replace if necessary.

Notice: The valve should fit snugly in the bore.

Notice: Coat the valve, spring and retainer with TOTAL FLUID HX prior to assembly.

3. Install the 3-4 shift valve, the valve spring, the retainer and the key.

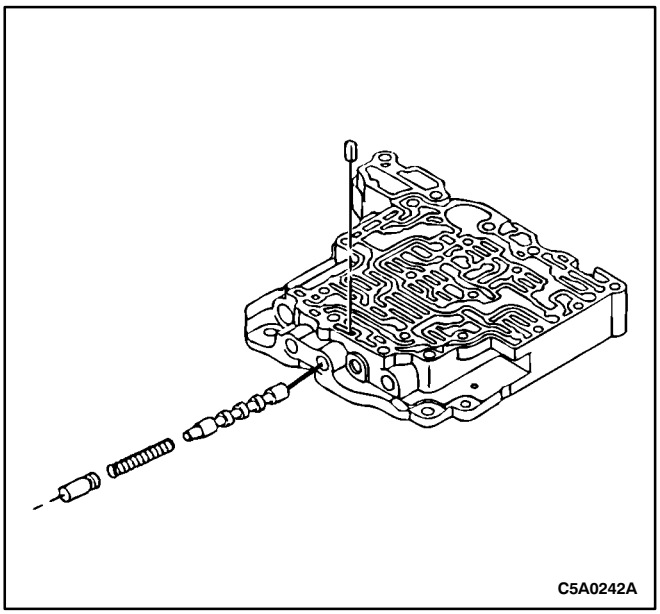

Notice: Inspect the valve for damage or wear. Replace if necessary.

Notice: The valve should fit snugly in the bore.

Notice: Coat the valve, spring and retainer with TOTAL FLUID HX prior to assembly.

4. Install the 1-2 shift valve, the valve spring , the retainer and the key.

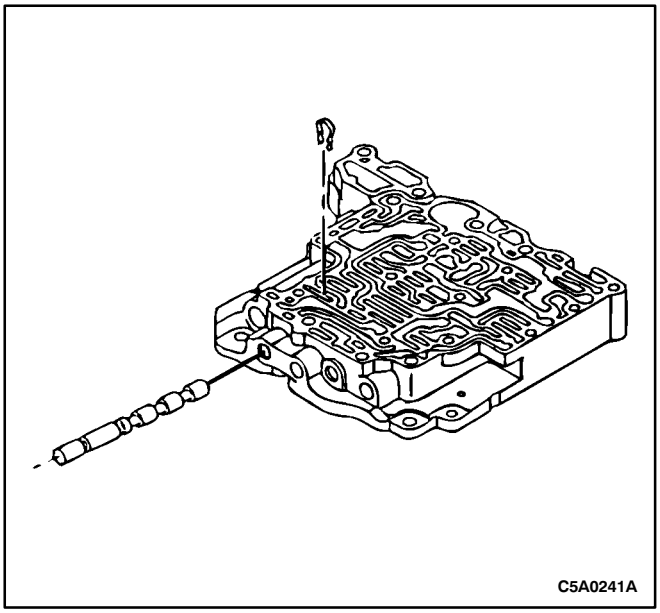

Notice: Inspect the plug for damage or wear. Replace if necessary.

Notice: The plug should fit snugly in the bore.

Notice: Coat the plug with TOTAL FLUID HX prior to assembly.

5. Install the neutral control plug and the snap ring retainer.

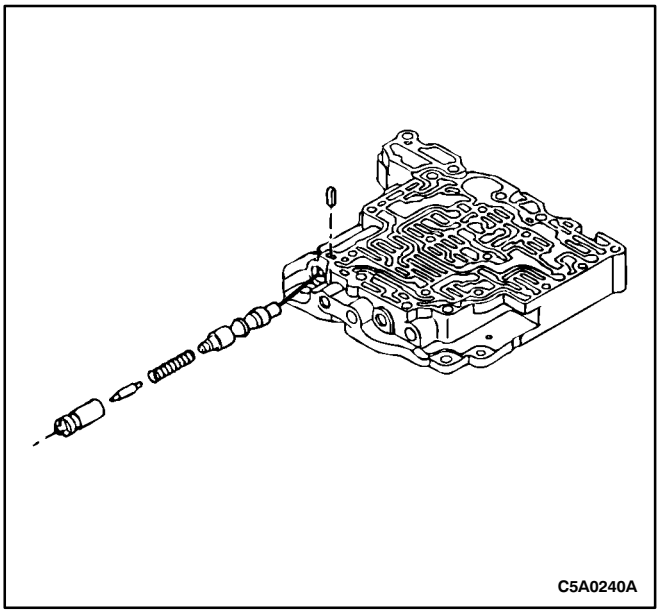

Notice: Inspect the valve for damage or wear. Replace if necessary.

Notice: The valve should fit snugly in the bore.

Notice: Coat the valve, spring, plunger and sleeve with TOTAL FLUID HX prior to assembly.

6. Install the primary regulator valve, the valve spring, the primary regulator valve plunger, the primary regulator valve plunger sleeve, and the key.

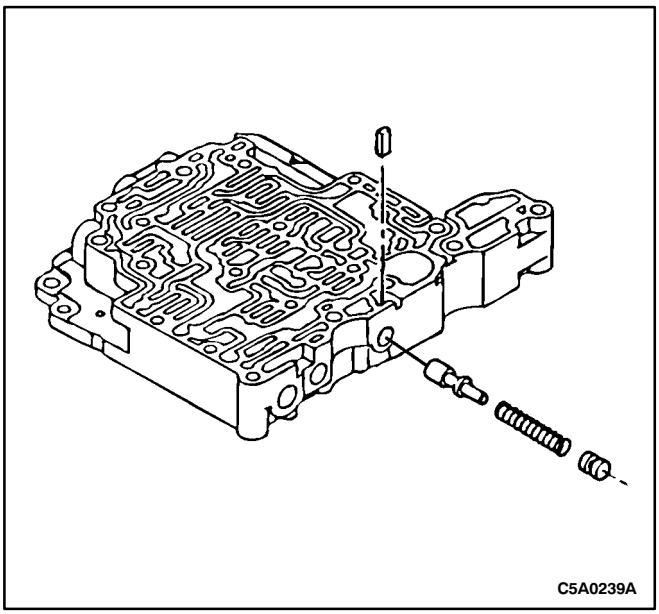

Notice: Inspect the valve for damage or wear. Replace if necessary.

Notice: The valve should fit snugly in the bore.

Notice: Coat the valve, spring and retainer with TOTAL FLUID HX prior to assembly.

7. Install the coast (lockup) modulator valve, the valve spring, the retainer and the key.

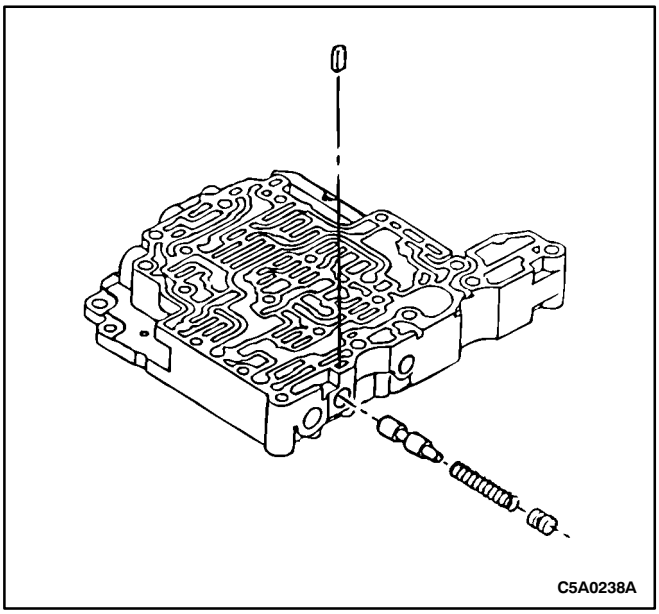

Notice: Inspect the valve for damage or wear. Replace if necessary.

Notice: The valve should fit snugly in the bore.

Notice: Coat the valve, spring and retainer with TOTAL FLUID HX prior to assembly.

8. Install the clutch modulator valve, the valve spring, the retainer and the key.

LOWER VALVE BODY

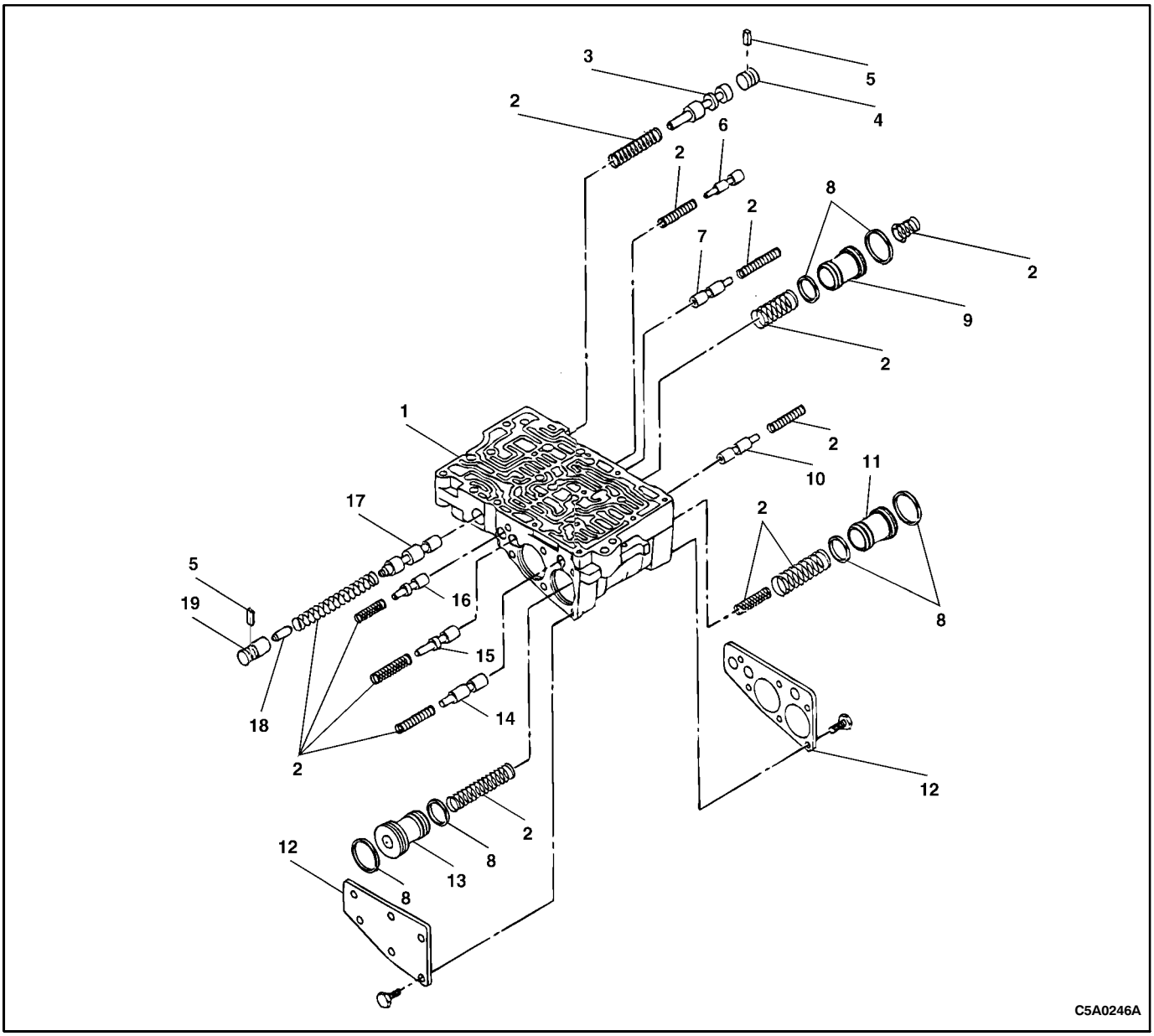

1. Lower Valve Body
2. Valve Spring
3. Secondary Regulator Valve
4. Retainer
5. Key
6. Accumulator Control Valve
7. B2 Accumulator Valve
8. Seal Rings
9. B2 Accumulator Piston
10. C2 Accumulator Valve
11. C2 Accumulator Piston
12. Cover Plate
13. C3 Accumulator Piston
14. C3 Accumulator Valve
15. B1 Accumulator Valve
16. Coast Modulator Valve
17. Lockup Control Valve
18. Lockup Control Plunger
19. Lockup Control Plunger Sleeve

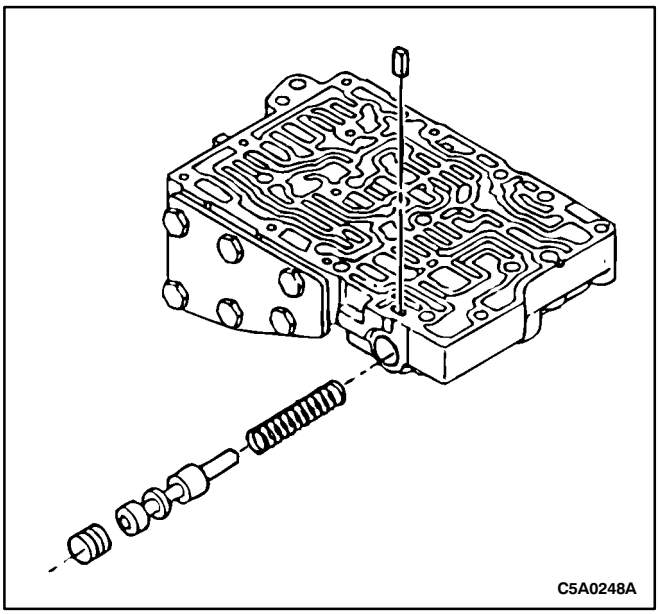

1. Remove the key, the retainer, the secondary regulator valve and the valve spring.

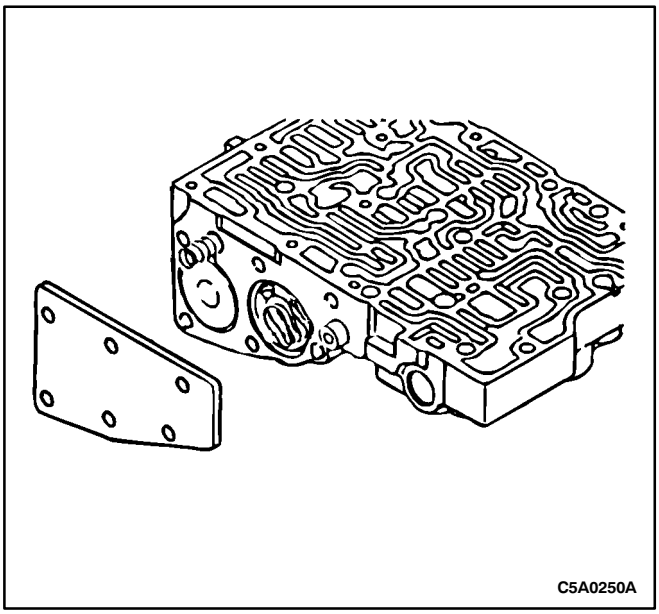

Notice: Discard the gasket.

2. Remove the cover plate and gasket.

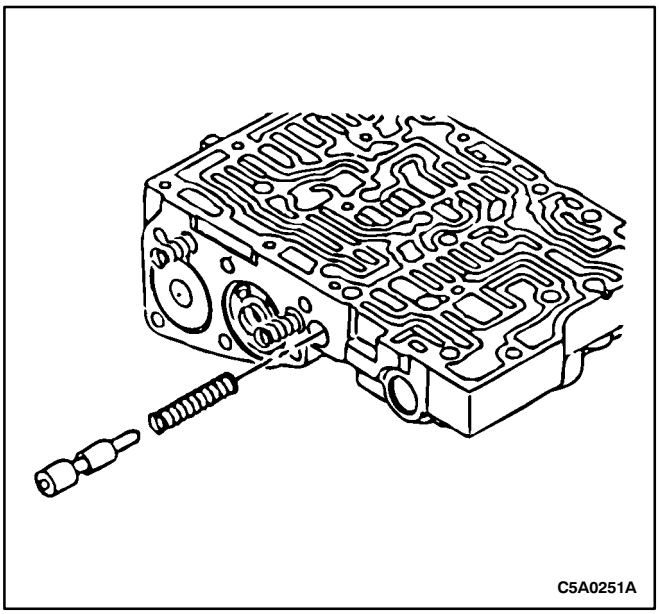

3. Remove the valve spring and the accumulator control valve.

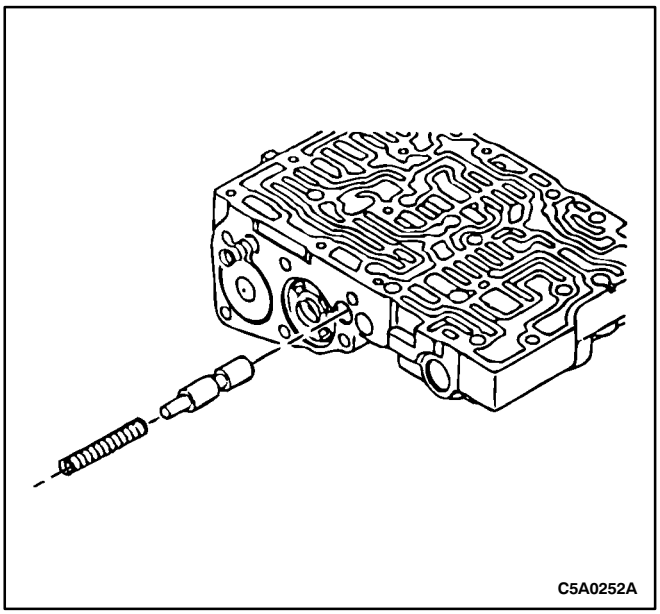

4. Remove the valve spring and the B2 accumulator valve.

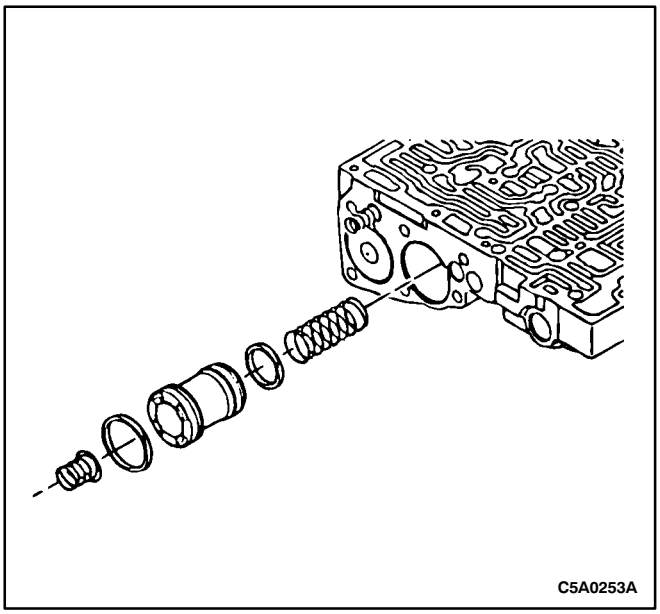

Notice: Remove the seal rings from the piston and discard them.

5. Remove the B2 accumulator piston and the springs.

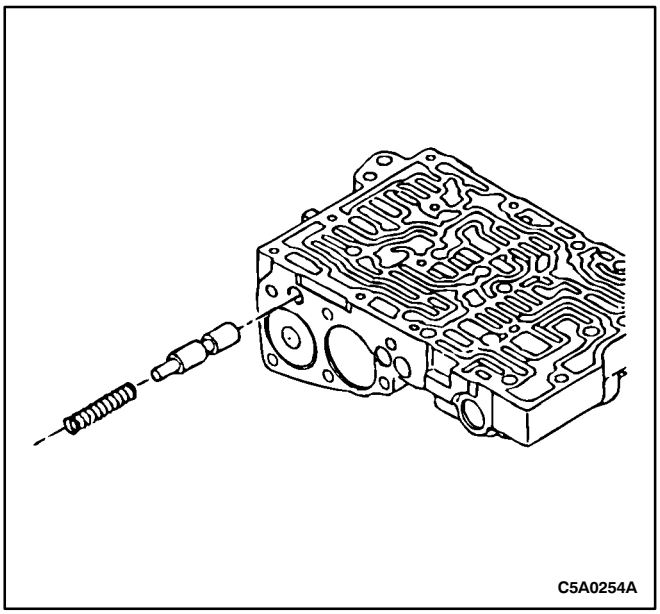

6. Remove the valve spring and the C2 accumulator valve.

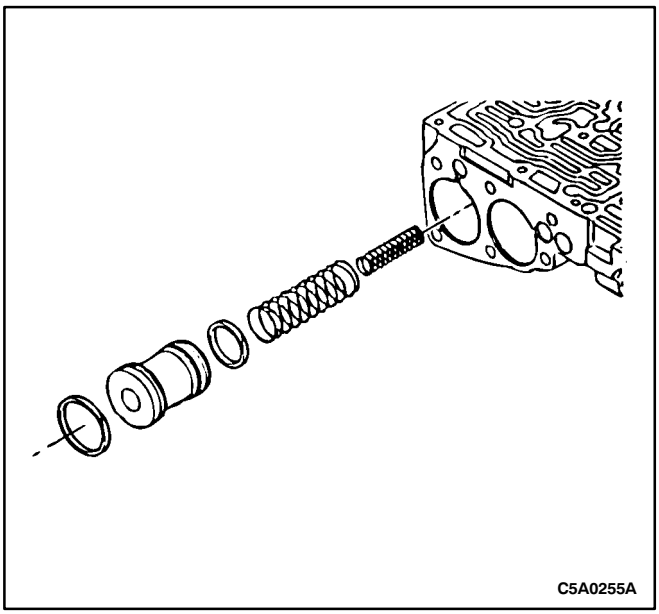

Notice: Remove discard the seal rings from the piston.

7. Remove the C2 accumulator piston and the springs.

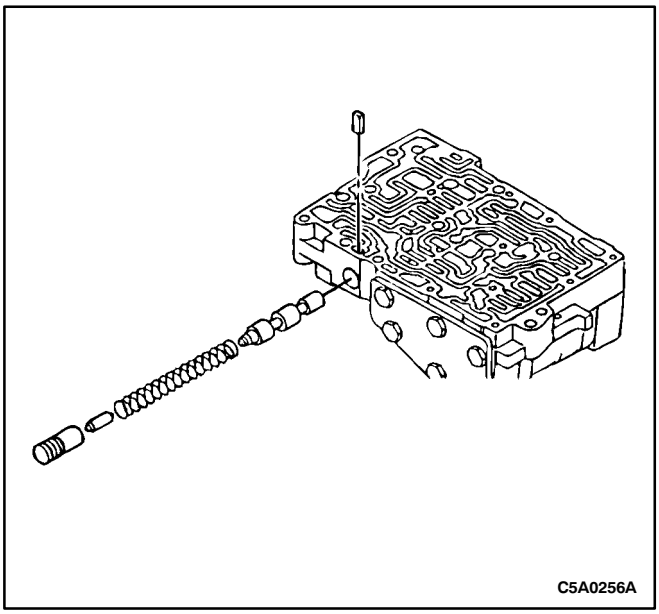

8. Remove the key, the lockup control plunger sleeve, lockup control plunger, the valve spring and the lockup control valve.

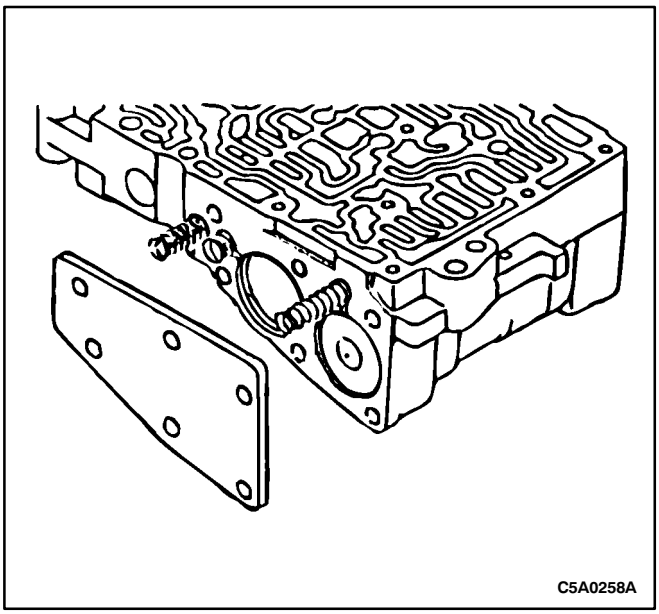

Notice: Discard the gasket.

9. Remove the cover plate and gasket.

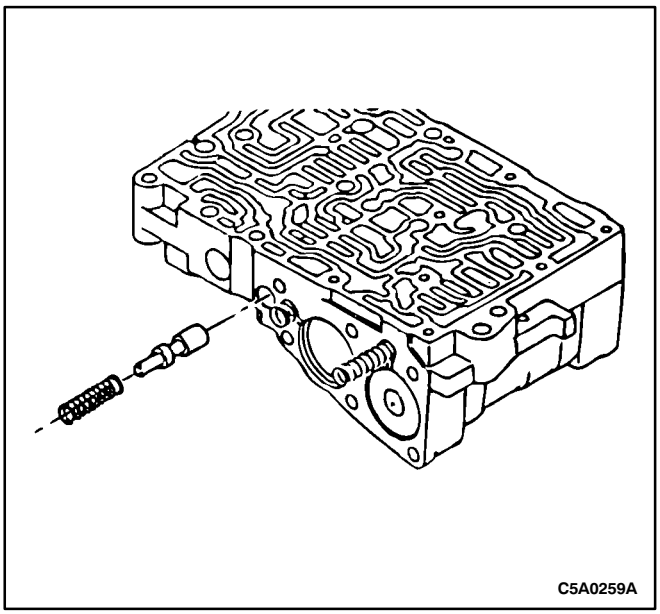

10. Remove the valve spring and the coast modulator valve.

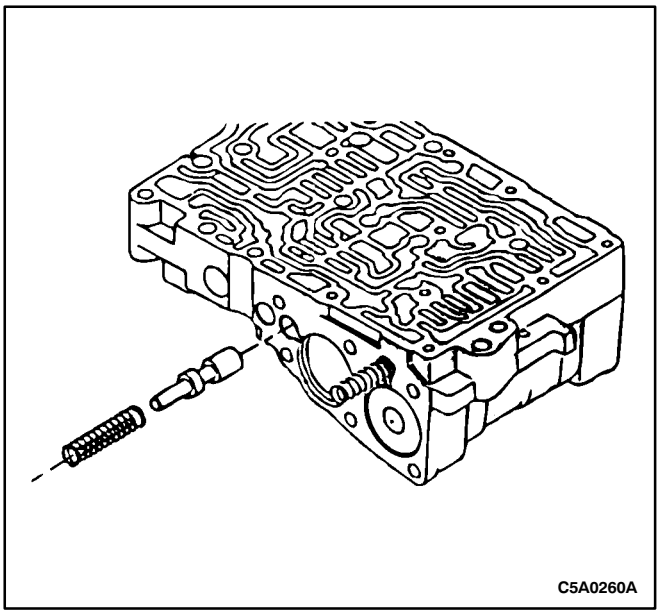

11. Remove the valve spring and the B1 modulator valve.

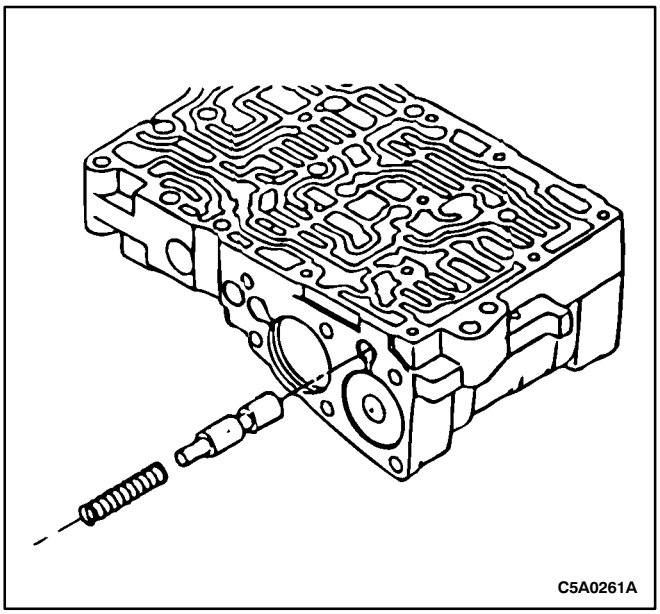

12. Remove the valve spring and the C3 modulator valve.

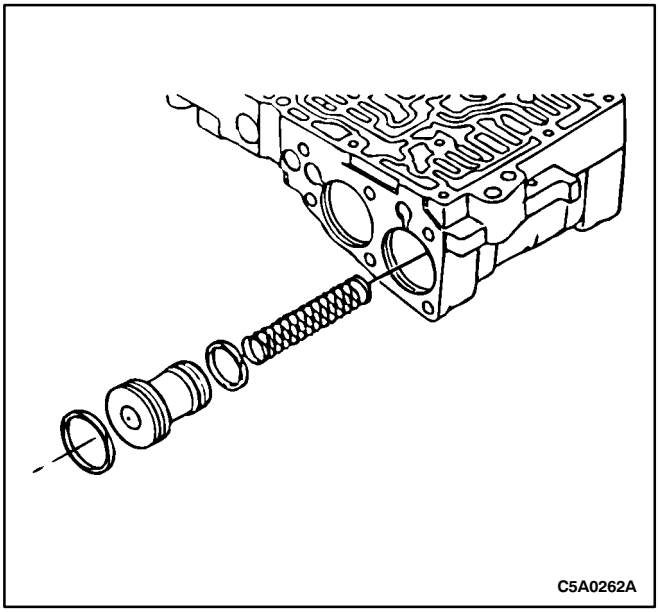

Notice: Remove the seal rings from the piston and discard them.

13. Remove the C3 accumulator piston and spring.

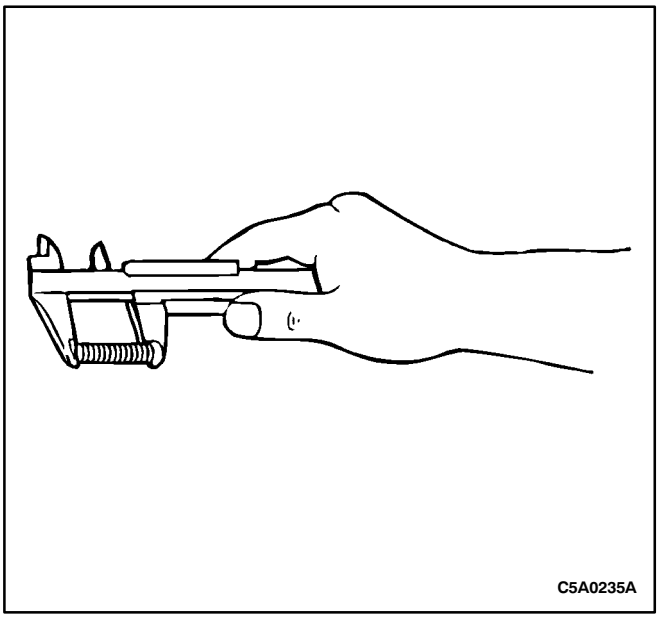

14. Inspect the valve springs.
    - Using vernier calipers, measure the free length and outer diameter of the spring. If it does not meet specifications, replace it.

Valve or Piston	Valve Spring Free Length mm (in)	Valve Spring Outer Diameter mm (in)
Secondary	37.4 (1.5)	10.0 (0.39)
Regulator Accumulator	26.6 (1.0)	7.2 (0.28)
Control B2 Valve	32.77 (1.3)	7.0 (0.27)
B2 Piston-Inner	15.0 (0.59)	11.9 (0.47)
B2 Piston-Outer	46.0 (1.8)	15.2 (0.60)
C2 Piston-Inner	37.0 (1.4)	10.3 (0.40)
C2 Piston-Outer	46.0 (1.8)	15.3 (0.60)
C2 Accumulator	30.67 (1.2)	7.0 (0.27)
LockUp Control	64.94 (2.5)	9.6 (0.38)
Coast Modulator	24.37 (0.95)	7.2 (0.28)
B1 Modulator	25.94 (1.0)	8.0 (0.31)
C3 Piston	46.0 (1.8)	11.6 (0.46)
C3 Accumulator	30.67 (1.2)	7.0 (0.27)

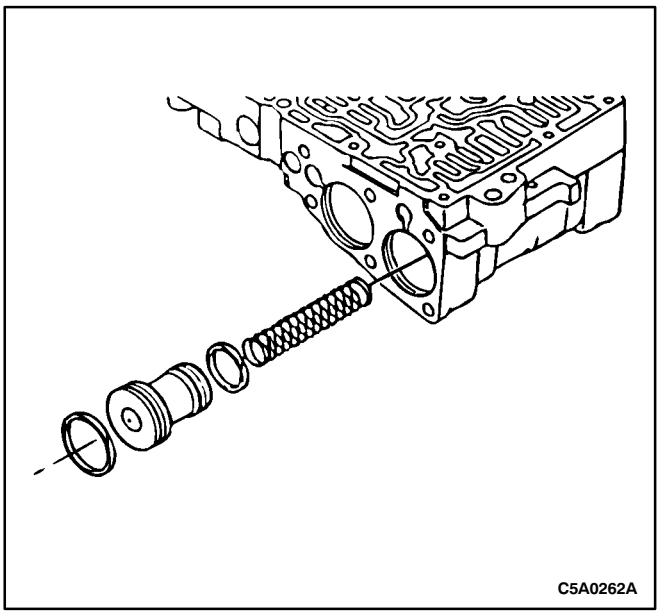

Assembly Procedure

Notice: Inspect the piston for damage or wear. Replace if necessary.

Notice: The piston should fit snugly in the bore.

Notice: Coat the piston, spring and seal rings with TOTAL FLUID HX prior to assembly.

1. Install new seal rings on the piston. Then install the spring and C3 accumulator piston.

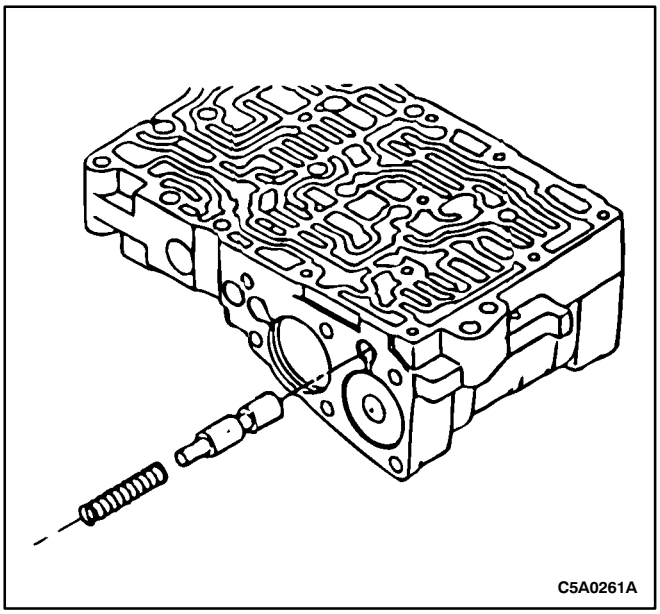

Notice: Inspect the valve for damage or wear. Replace if necessary.

Notice: The valve should fit snugly in the bore.

Notice: Coat the valve and spring with TOTAL FLUID HX prior to assembly.

2. Install the C3 modulator valve and the valve spring.

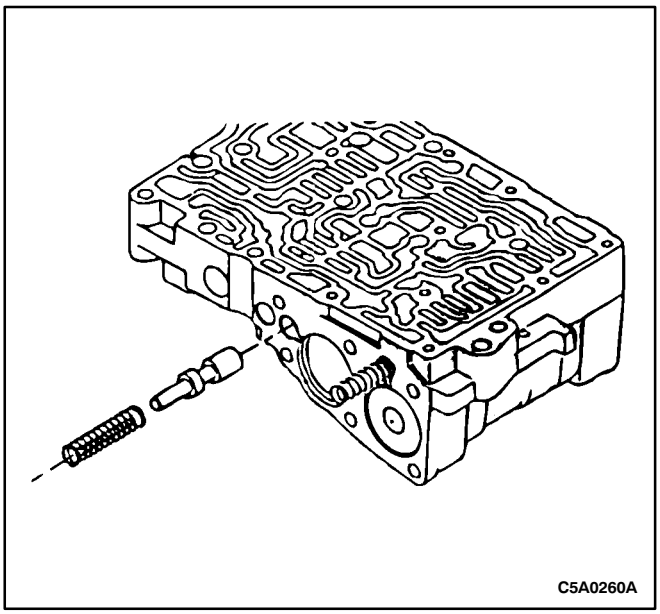

Notice: Inspect the valve for damage or wear. Replace if necessary.

Notice: The valve should fit snugly in the bore.

Notice: Coat the valve and spring with TOTAL FLUID HX prior to assembly.

3. Install the B1 modulator valve and the valve spring.

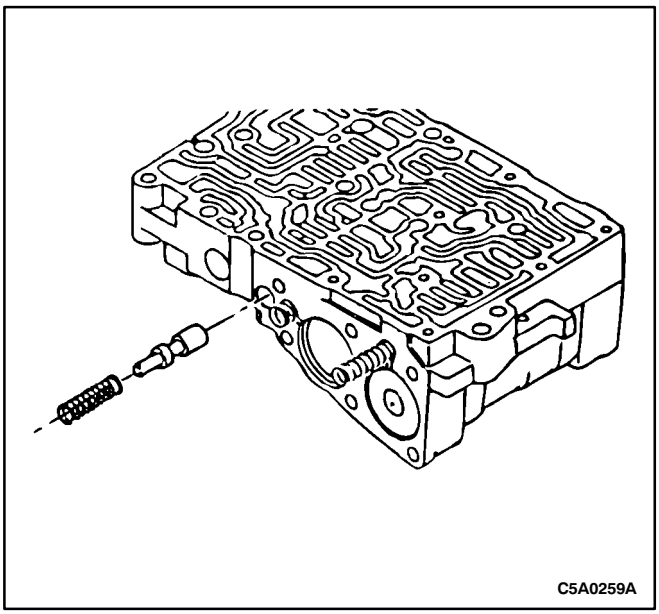

Notice: Inspect the valve for damage or wear. Replace if necessary.

Notice: The valve should fit snugly in the bore.

Notice: Coat the valve and spring with TOTAL FLUID HX prior to assembly.

4. Install the coast modulator valve and the valve spring.

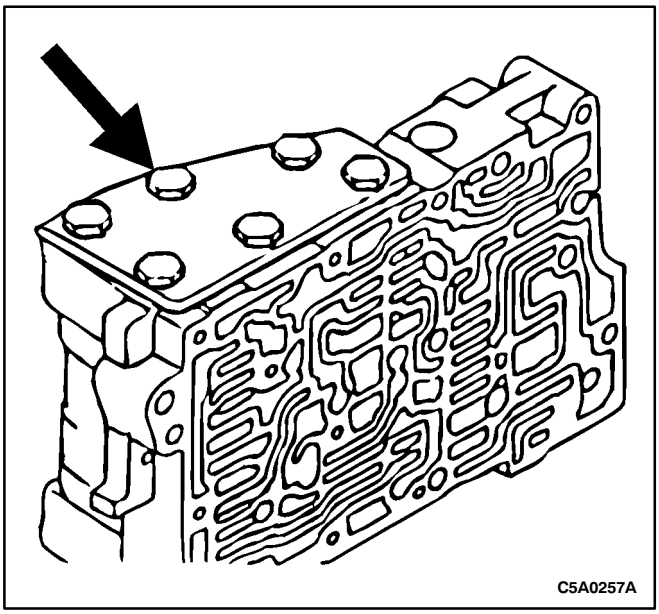

Notice: Tighten the six bolts evenly and gradually.

5. Install a new gasket and the cover plate.

Tighten

Tighten the bolts to 6-7 N•m (53-62 lb-in).

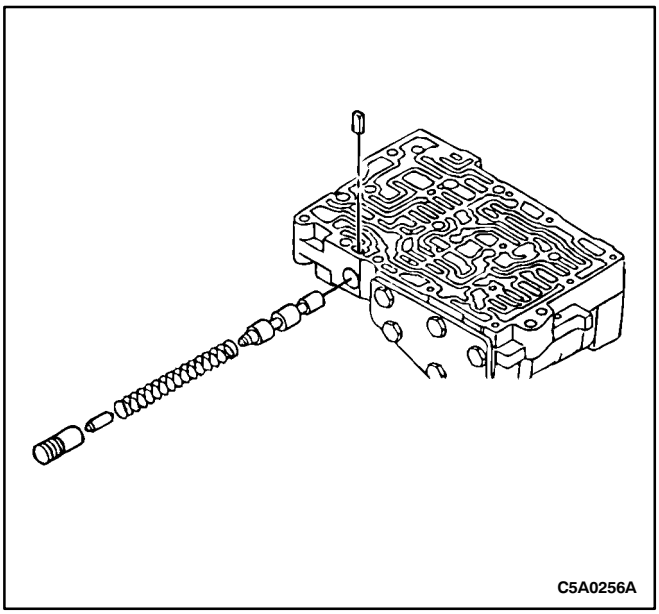

Notice: Inspect the valve for damage or wear. Replace if necessary.

Notice: The valve should fit snugly in the bore.

Notice: Coat the valve, spring, plunger and sleeve with TOTAL FLUID HX prior to assembly.

6. Install the lockup control valve and the valve spring. Insert the lockup control plunger in the lockup control plunger sleeve and install into the valve body. Push in the key.

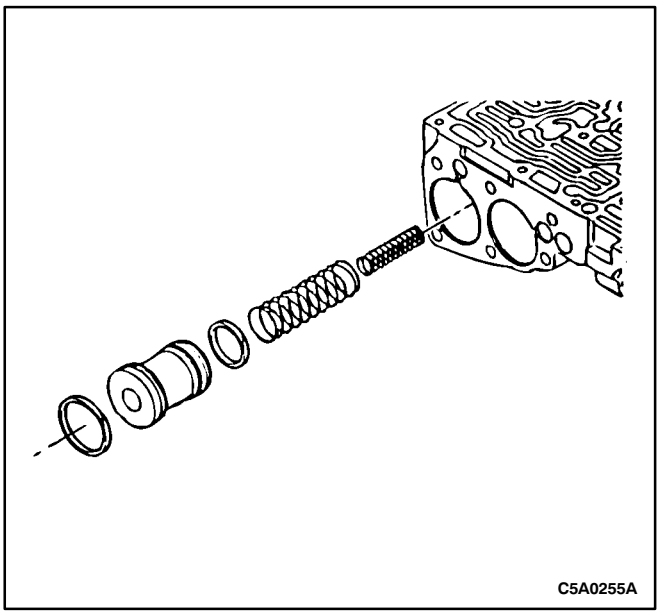

Notice: Inspect the valve for damage or wear. Replace if necessary.

Notice: The piston should fit snugly in the bore.

Notice: Coat the piston, springs and seal rings with TOTAL FLUID HX prior to assembly.

7. Install new seal rings on the piston. Then install the springs and C2 accumulator piston.

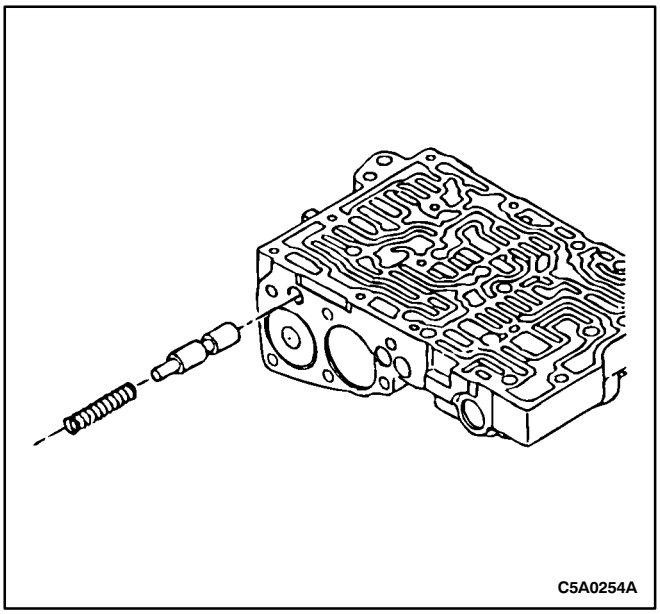

Notice: Inspect the valve for damage or wear. Replace if necessary.

Notice: The valve should fit snugly in the bore.

Notice: Coat the valve and spring with TOTAL FLUID HX prior to assembly.

8. Install the C2 accumulator valve and the valve spring.

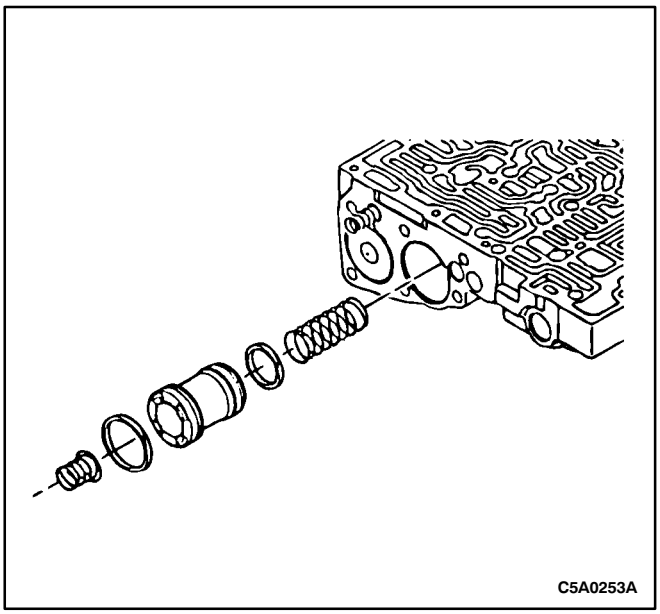

Notice: Inspect the valve for damage or wear. Replace if necessary.

Notice: The piston should fit snugly in the bore.

Notice: Coat the piston, springs and seal rings with TOTAL FLUID HX prior to assembly.

9. Install new seal rings on the piston. Then install the springs and B2 accumulator piston.

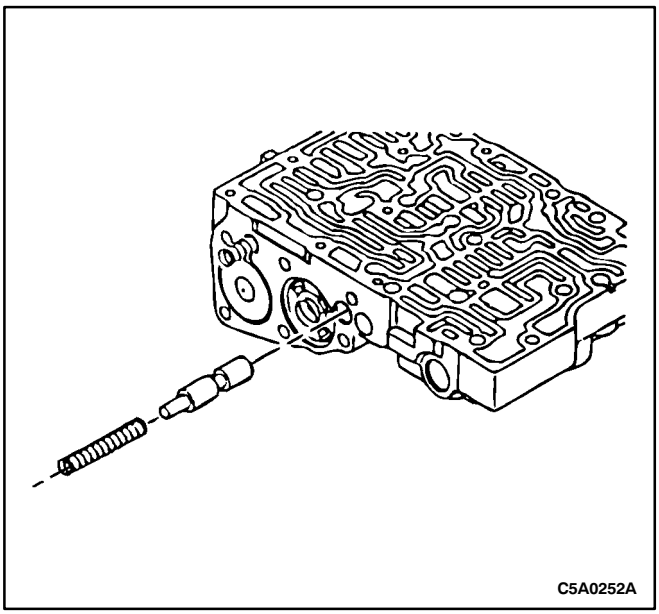

Notice: Inspect the valve for damage or wear. Replace if necessary.

Notice: The valve should fit snugly in the bore.

Notice: Coat the valve and spring with TOTAL FLUID HX prior to assembly.

10. Install the B2 accumulator valve and the valve spring.

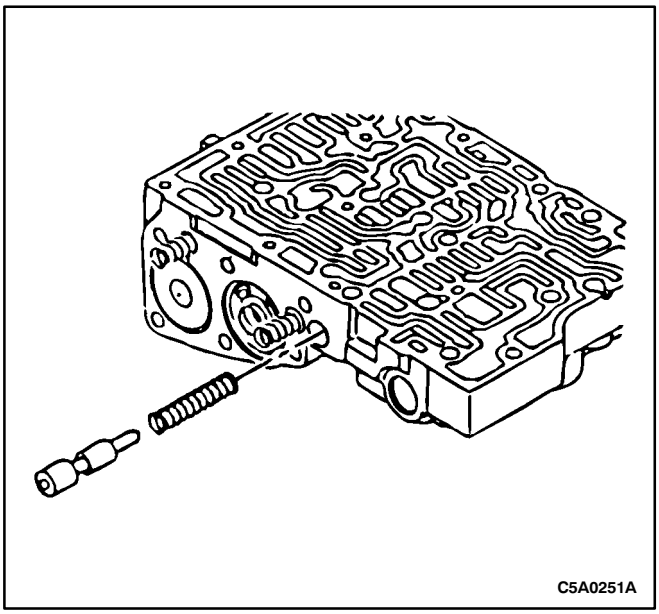

Notice: Inspect the valve for damage or wear. Replace if necessary.

Notice: The valve should fit snugly in the bore.

Notice: Coat the valve and spring with TOTAL FLUID HX prior to assembly.

11. Install the accumulator control valve and the valve spring.

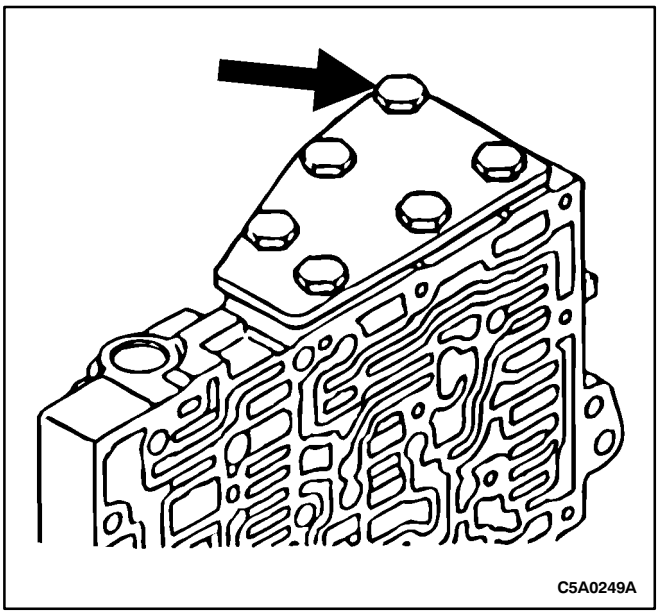

Notice: Tighten the bolts evenly and gradually.

12. Install a new gasket and the cover plate.

Tighten

Tighten the bolts to 6-7 N•m (53-62 lb-in).

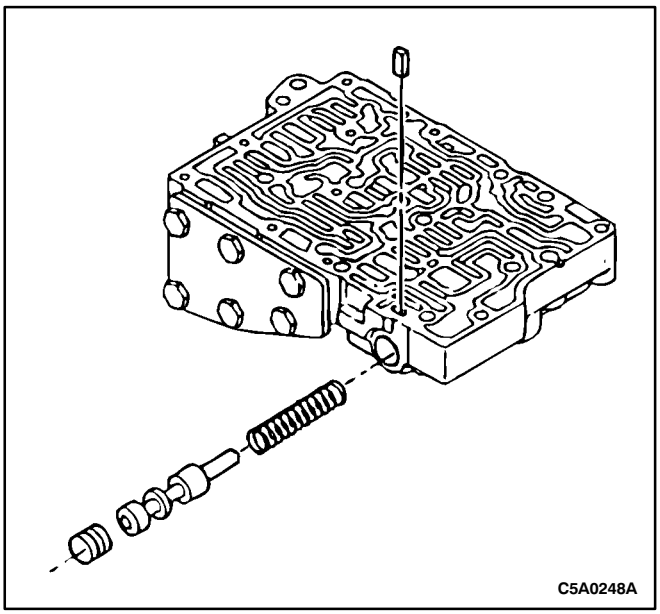

Notice: Inspect the valve for damage or wear. Replace if necessary.

Notice: The valve should fit snugly in the bore.

Notice: Coat the valve, spring and retainer with Texaco 1854 automatic transmission prior to assembly.

13. Install the valve spring, the secondary regulator valve and the retainer. Push in the key.

BEARING AND THRUST WASHER LOCATION

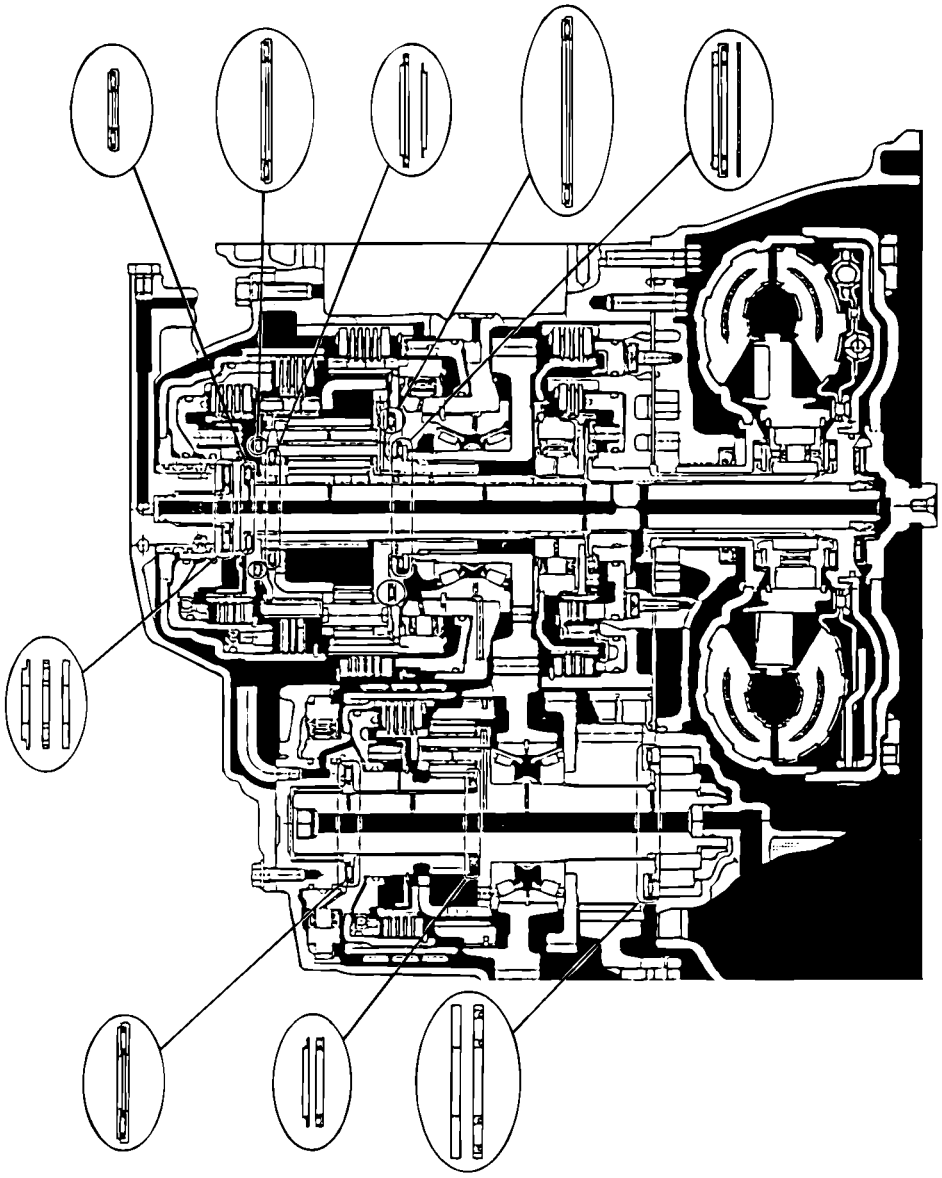

Bearing and Thrust Washer Location									
	Diameter	1 mm (in)	2 mm (in)	3 mm (in)	4 mm (in)	5 mm (in)	6 mm (in)	7 mm (in)	8 mm (in)
Thrust Washers	Outer	58.0 (2.3)		54.0 (2.1)	74.0 (2.9)		41.0 (1.6)		
	Inner	43.8 (1.7)		39.0 (1.5)	53.0 (2.0)		13.5 (0.53)		
Front Bearings	Outer	61.7 (2.4)	88.7 (3.5)	57.0 (2.2)	68.5 (2.7)	42.0 (1.6)	41.7 (1.6)	71.0 (2.8)	41.8 (1.6)
	Inner	46.0 (1.8)	72.4 (2.8)	39.0 (1.5)	50.0 (2.0)	22.1 (0.87)	23.0 (0.90)	49.0 (1.9)	28.6 (1.1)
Thrust Washers-Rear	Outer						41.0 (1.6)	71.0 (2.8)	57.3 (2.2)
	Inner						15.3 (0.60)	49.1 (1.9)	36.3 (1.4)

MAJOR COMPONENT ASSEMBLY

Tools Required

KM 674 Oil Seal Installer

Assembly Procedure

1. Clean components using a clean, high-quality parts cleaning solvent and use compressed air to dry all parts. Inspect all parts for damage or wear.

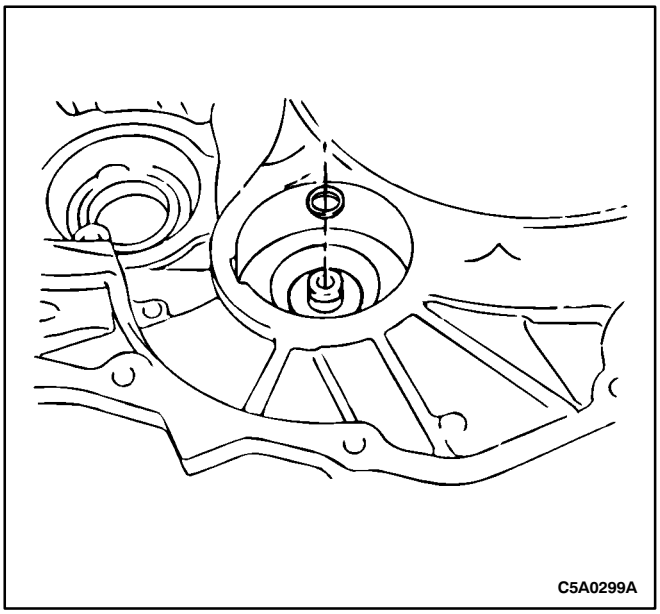

Notice: Apply TOTAL FLUID HX to the seal ring.

Notice: Do not spread the seal ring ends more than necessary.

2. Install a new seal ring on the transaxle housing.

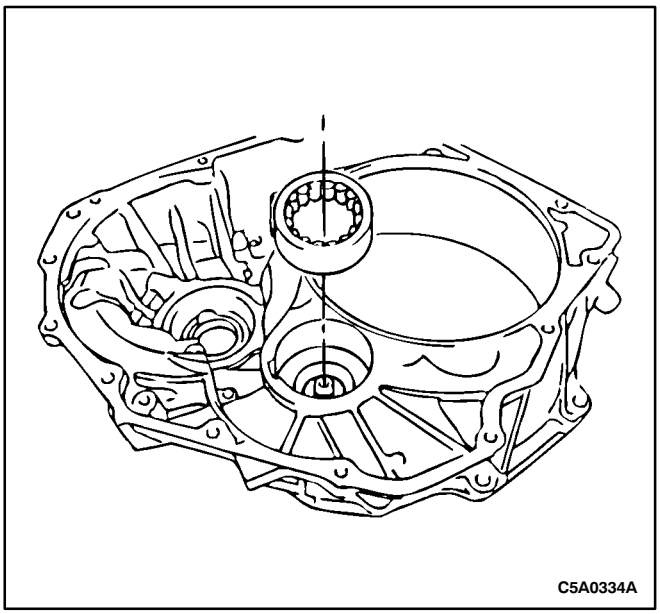

Notice: Press the bearing until it touches the housing.

3. Using a suitable press, install the bearing in the transaxle housing.

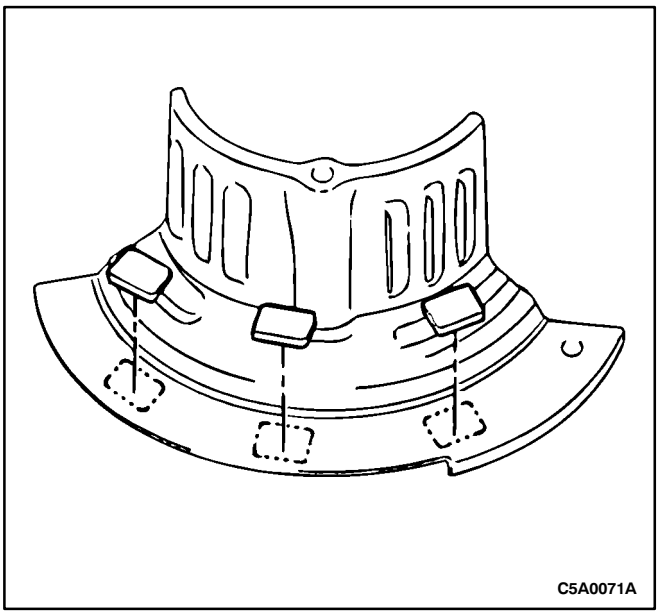

4. Install the magnets on the oil reserver plate.

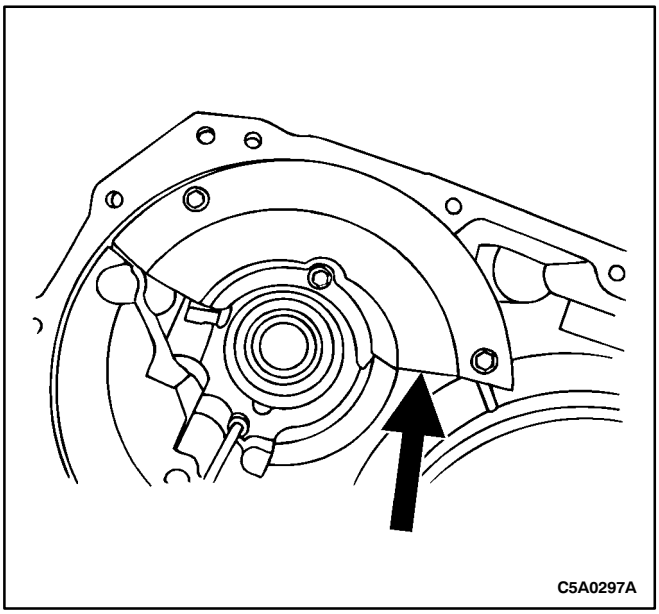

5. Install the oil reserver plate.

Tighten

Tighten the bolts to 4-7 N•m (35-62 lb-in).

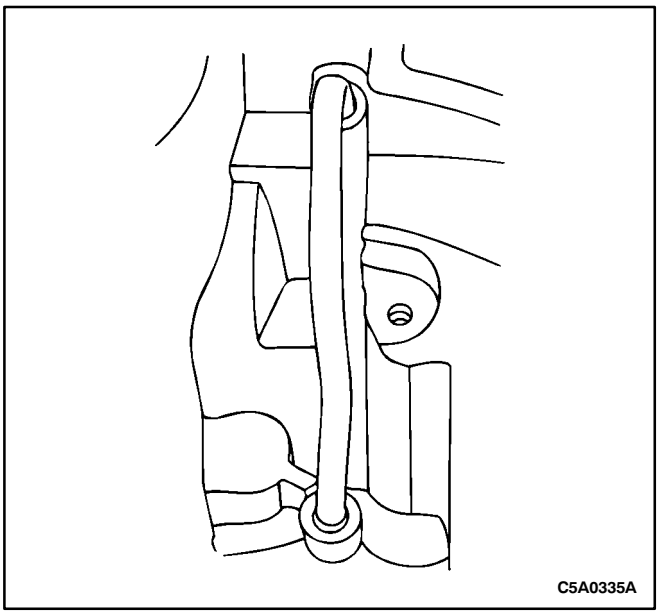

Caution: Do not bend or damage the tube.

6. Install the lubricant apply tube.
   - Using a plastic hammer, tap the tube into place.

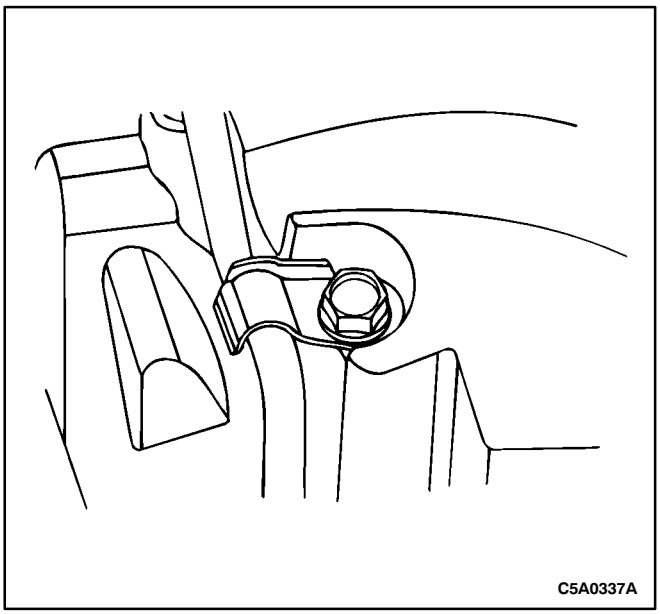

7. Install the apply tube clamp and bolt.

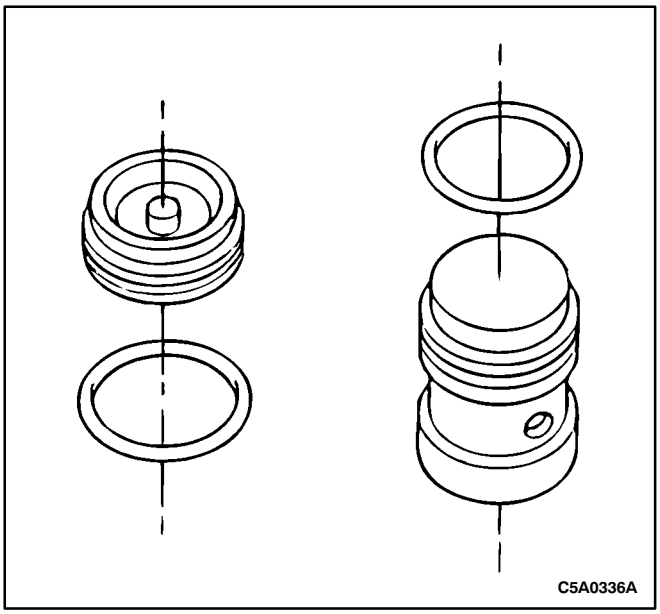

Notice: Apply TOTAL FLUID HX to the O-rings and the piston bore.

8. Install new O-rings on the underdrive brake accumulator cover and the underdrive brake accumulator piston.

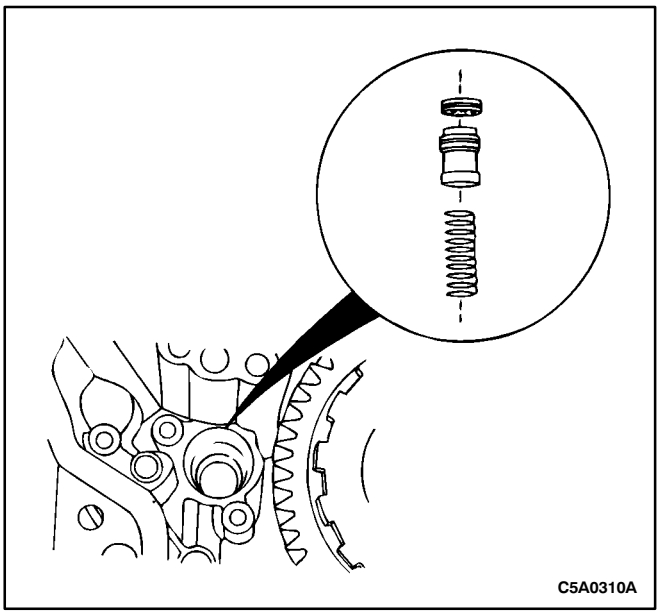

9. Install the accumulator piston spring, the underdrive brake accumulator piston and the underdrive brake accumulator cover.

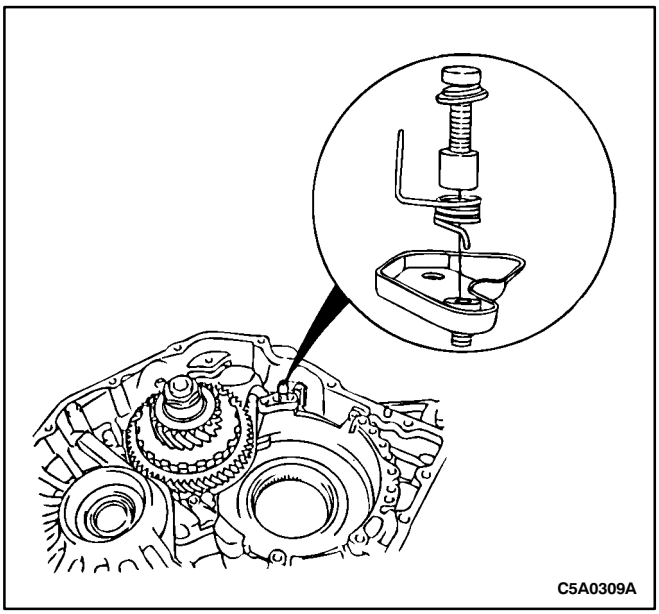

10. Install the underdrive brake accumulator bracket, the spring guide sleeve, the spring and the two bracket bolts.

Tighten

Tighten the bolts to 8-12 N•m (71-106 lb-in).

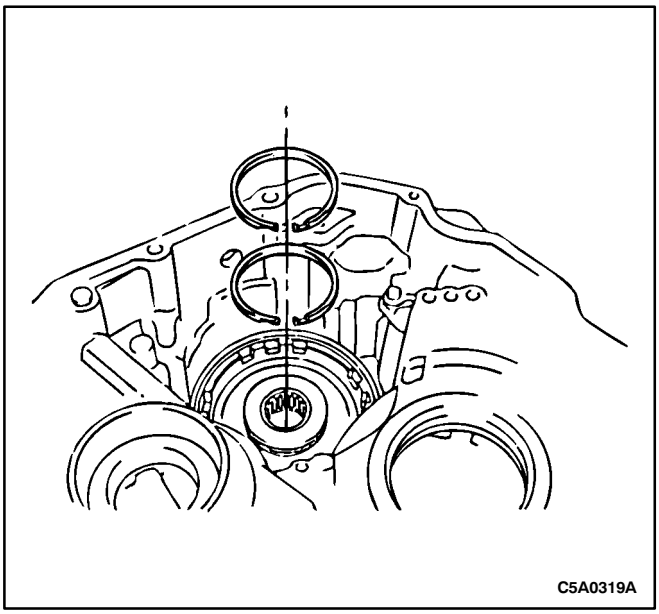

Notice: Apply TOTAL FLUID HX to the seal rings.

Notice: Do not spread the seal ring ends more than necessary.

11. Install new seal rings of the underdrive clutch drum.

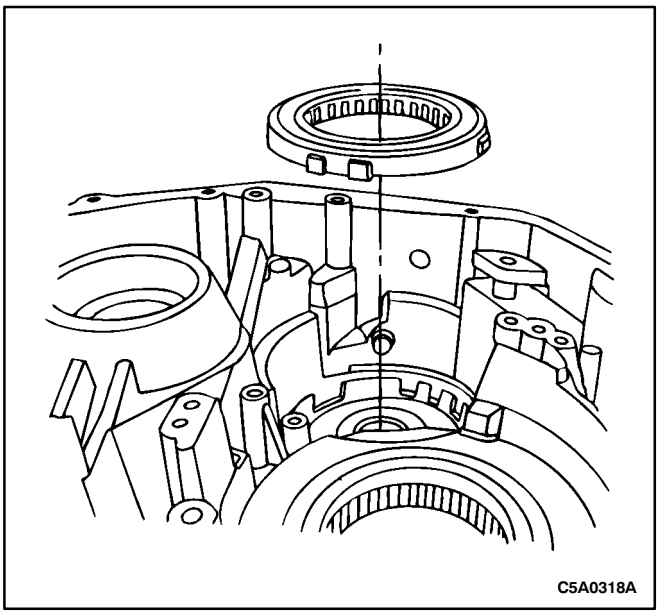

12. Install the underdrive one-way clutch.

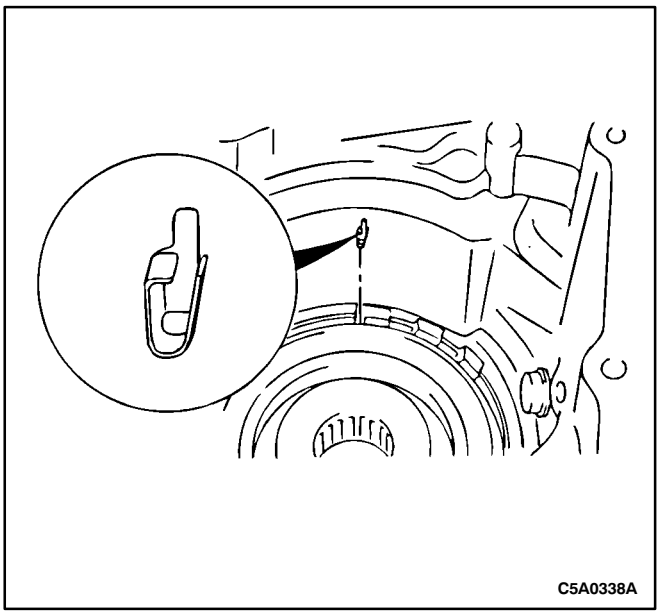

13. Install the underdrive one-way clutch outer race retainer as shown.

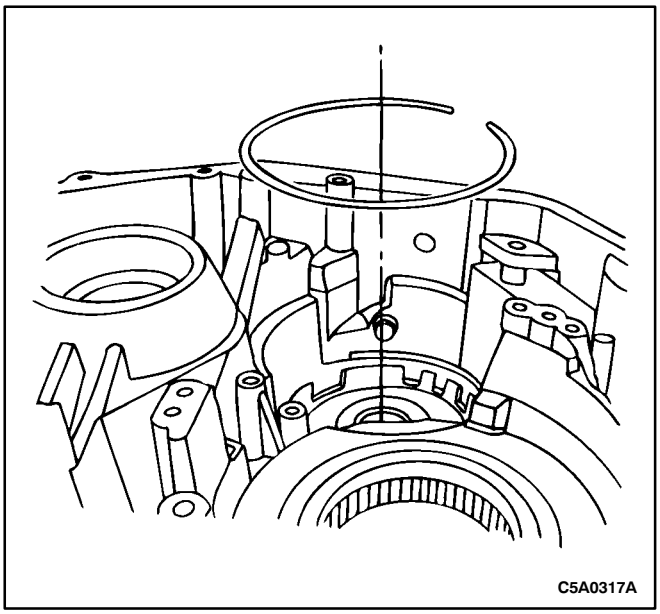

14. Install the snap ring.

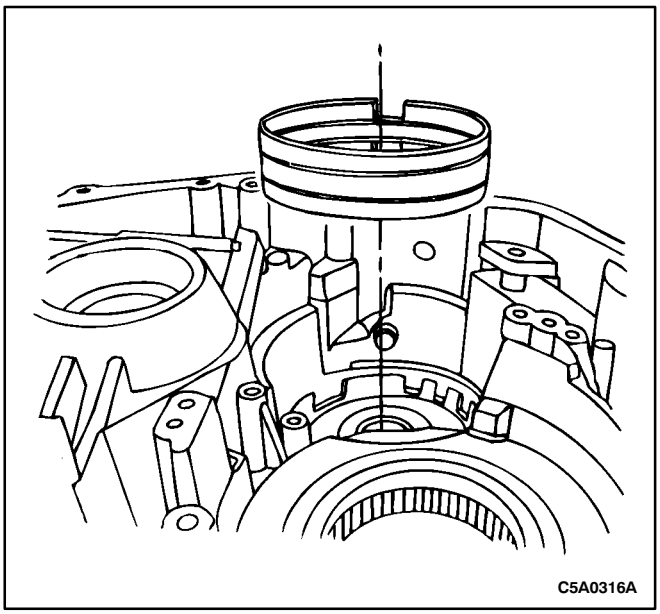

Notice: Align the brake band with the position of the anchor bolt.

15. Install the underdrive brake band.

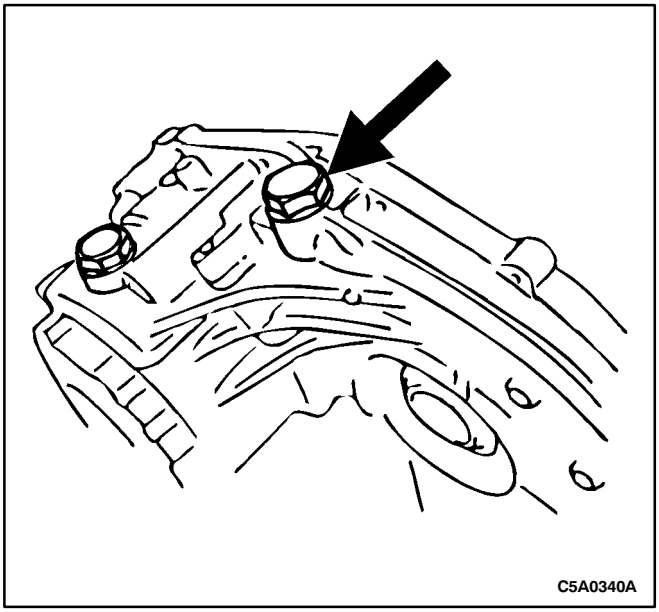

Notice: Apply TOTAL FLUID HX to the O-ring.

16. Install a new O-ring on the anchor bolt. Install the anchor bolt.

Tighten

Tighten the bolt to 133-200 N•m (98-147 lb-ft).

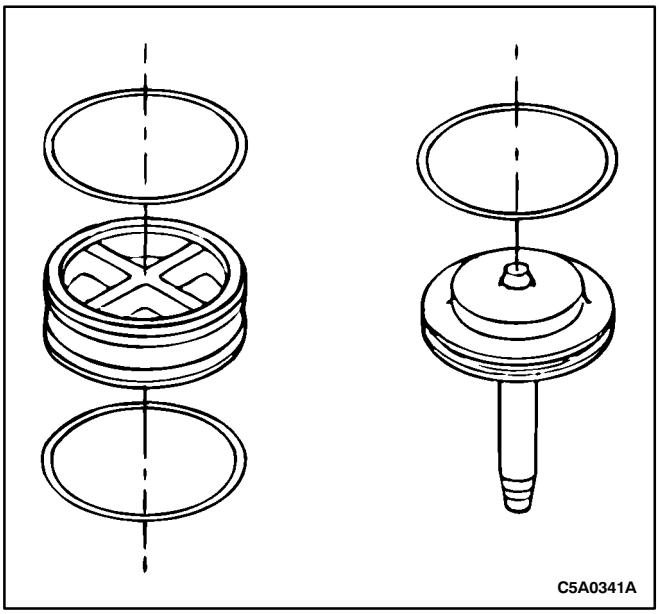

Notice: Apply TOTAL FLUID HX fluid to the O-rings.

17. Install new O-rings on the underdrive brake piston and the underdrive brake piston cover.

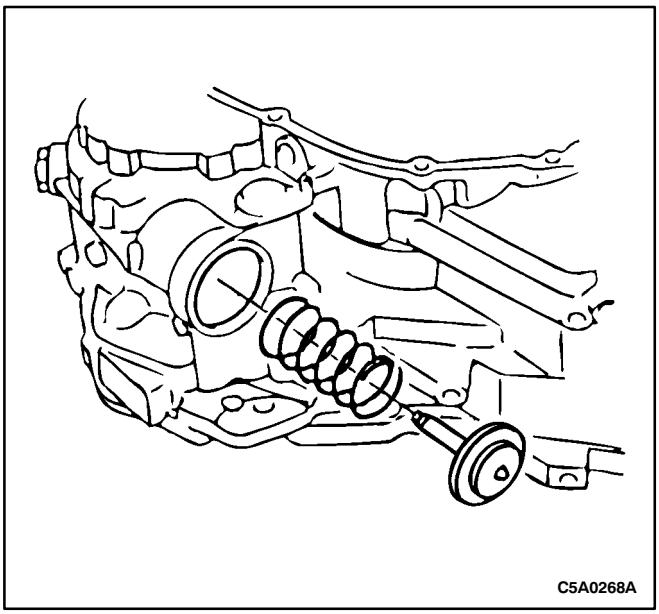

Notice: Set the piston rod in the brake band depression.

18. Install the spring and underdrive brake piston.

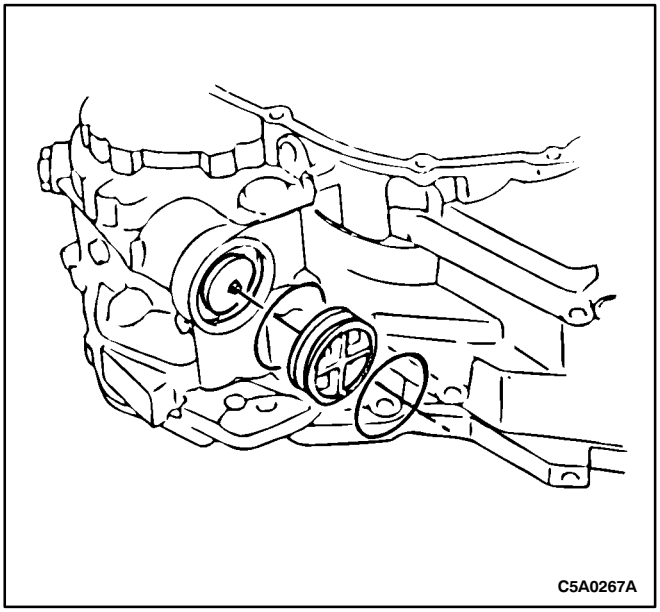

19. Install the underdrive brake piston cover and the snap ring.

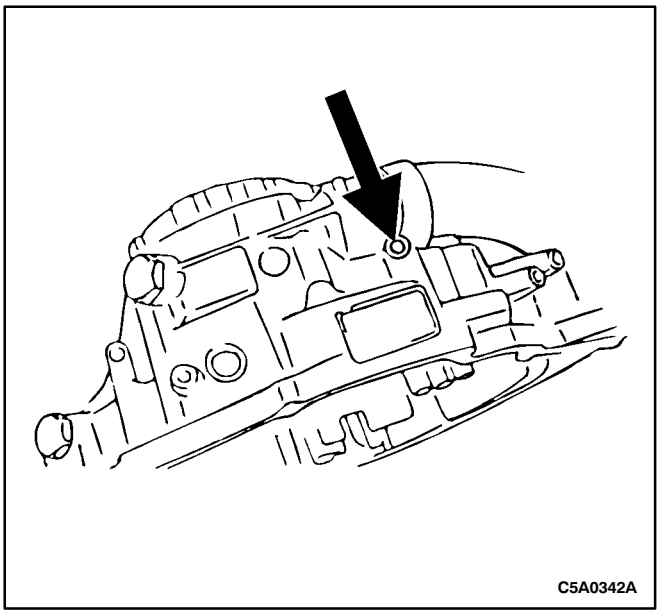

WARNING: USE CAUTION WHEN CHECKING COMPONENTS WITH COMPRESSED AIR OR INJURY MAY RESULT.

20. Inspect the underdrive brake piston stroke.
    - Measure the brake piston stroke by applying compressed air into the passage shown. The piston stroke should be 5.48-7.02 mm. If the stroke is not within specifications, replace the piston rod with a longer one.

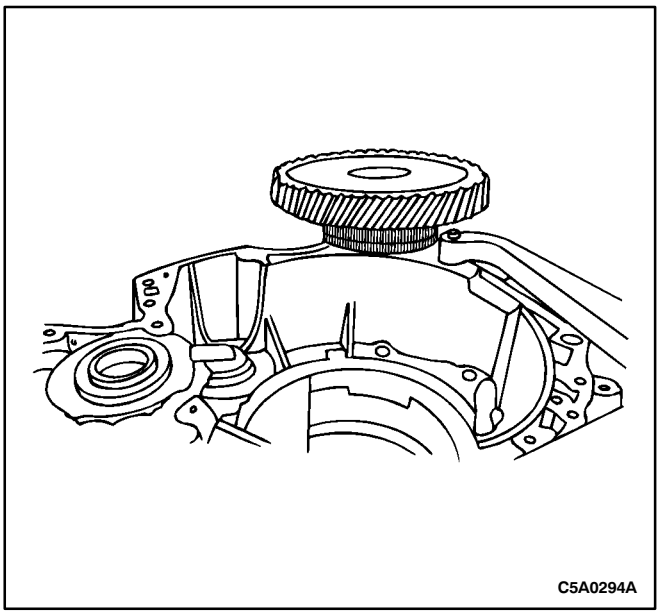

21. Install the counter drive gear into the transaxle case.

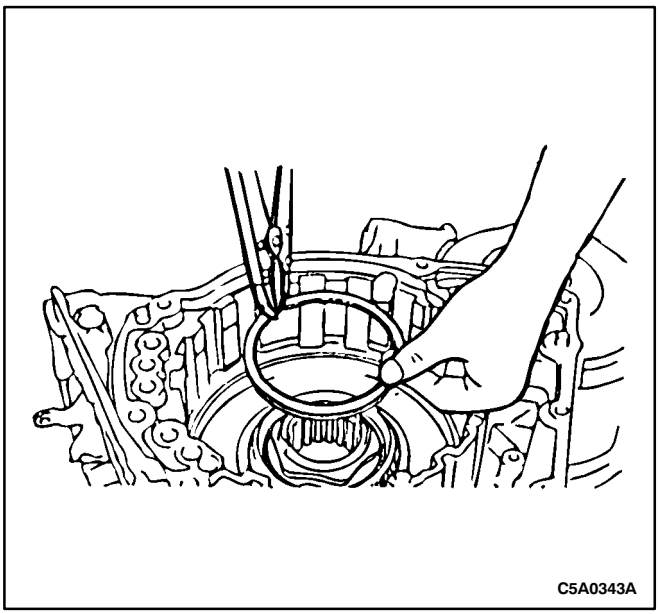

22. Install the snap ring.

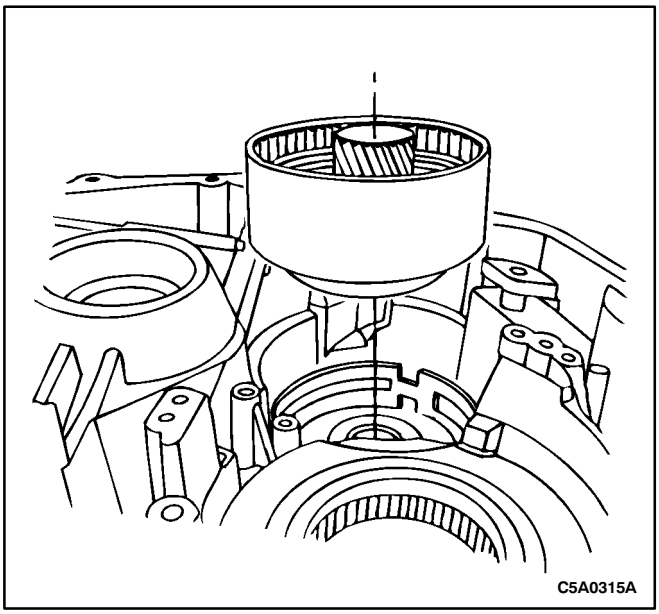

Notice: Apply Transjel Assembly Lubricant J-36850 or equivalent to the thrust washer before installing.

23. Install the thrust washer and the underdrive clutch.
    - Make sure the underdrive clutch turns freely counterclockwise and locks clockwise.

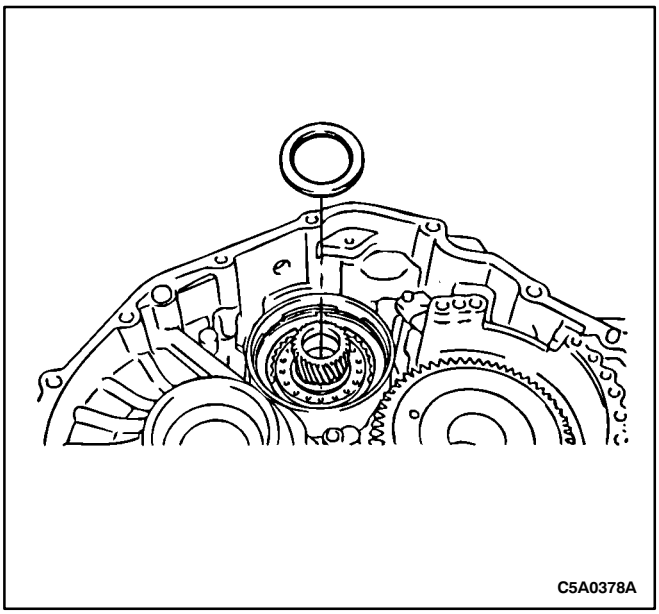

Notice: Apply Transjel Assembly Lubricant J-36850 or equivalent to the thrust washer before installing.

24. Install the thrust washer.

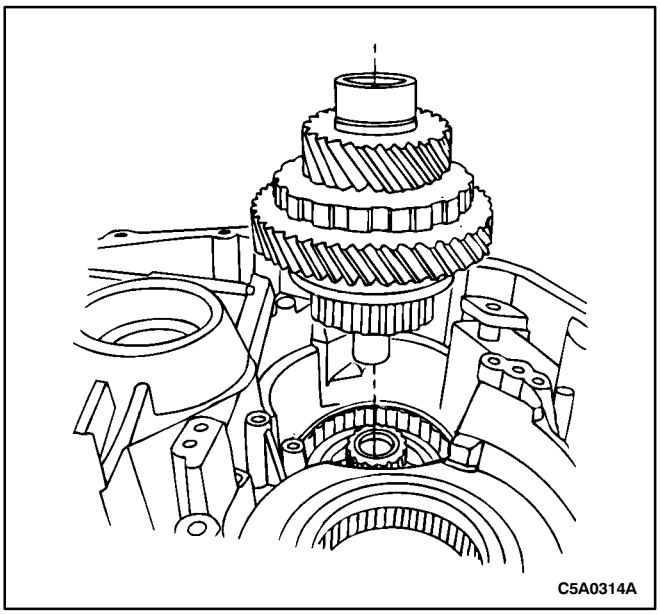

Notice: Apply Transjel Assembly Lubricant J-36850 or equivalent to the thrust washer before installing.

25. Install the thrust bearing to the rear side of the underdrive planetary gear. Install the planetary gear.
    - Make sure the counterdrive and counterdriven gear rotate smoothly.
    - Align the teeth of the clutch friction plates before installing the planetary gear.

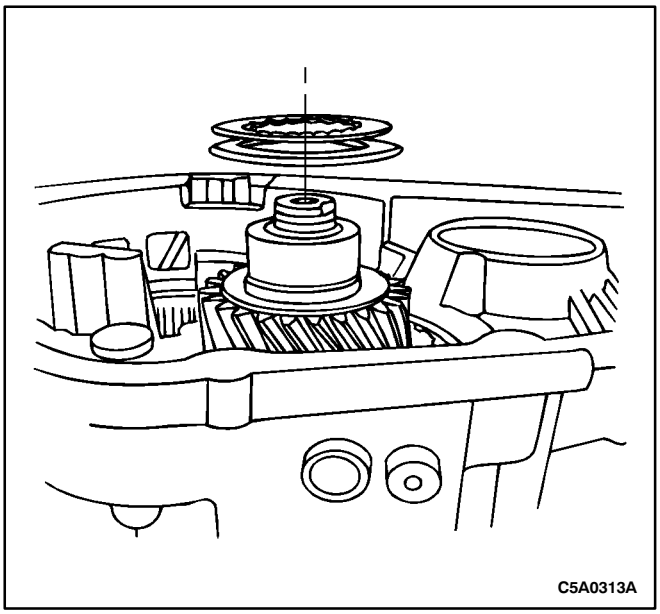

Notice: Apply Transjel Assembly Lubricant J-36850 or equivalent to the thrust washer before installing.

Notice: Make sure the roller bearings are facing up.

26. Install the thrust washer and bearing.

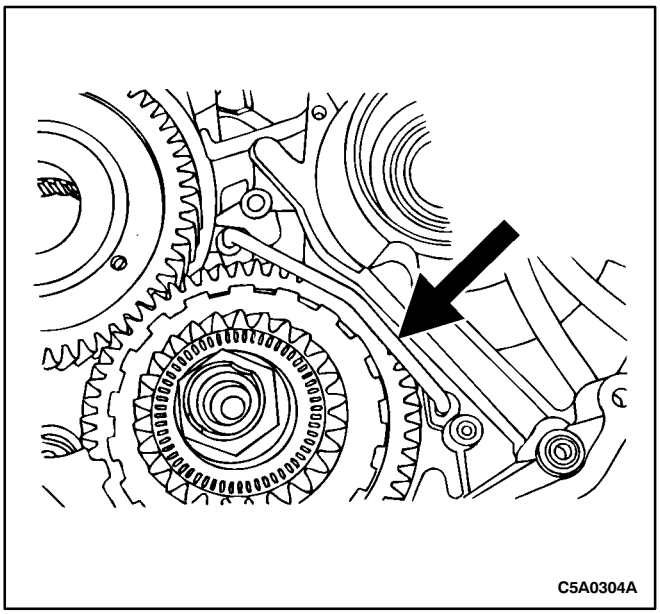

Caution: Do not bend or damage the tube.

27. Install the lubricant apply tube.
    - Using a plastic hammer, tap the tube into place.

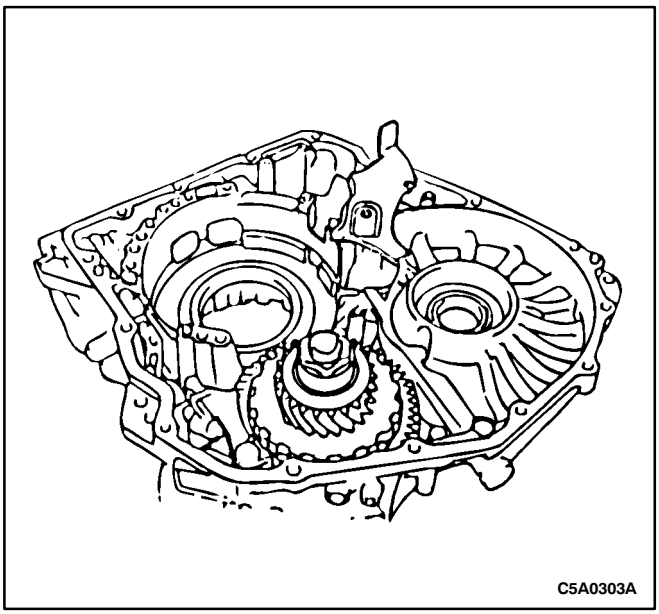

28. Install the oil reserver plate.

Tighten

Tighten the bolts to 4-7 N•m (35-62 lb-in).

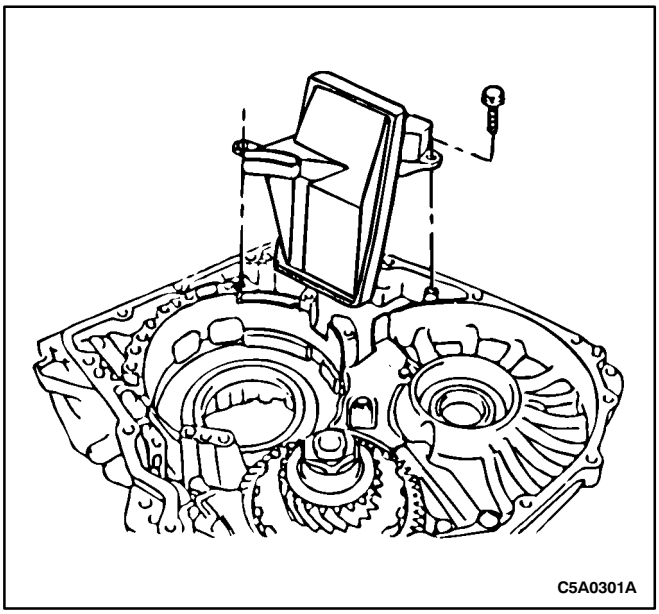

29. Install the oil filter.

Tighten

Tighten the bolt to 4-7 N•m (35-62 lb-in).

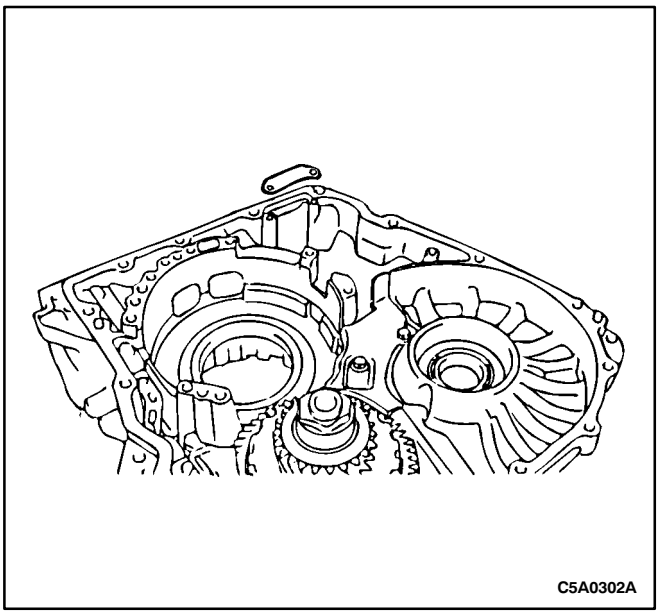

30. Install the transaxle case plate.

Tighten

Tighten the bolt to 4-7 N•m (35-62 lb-in).

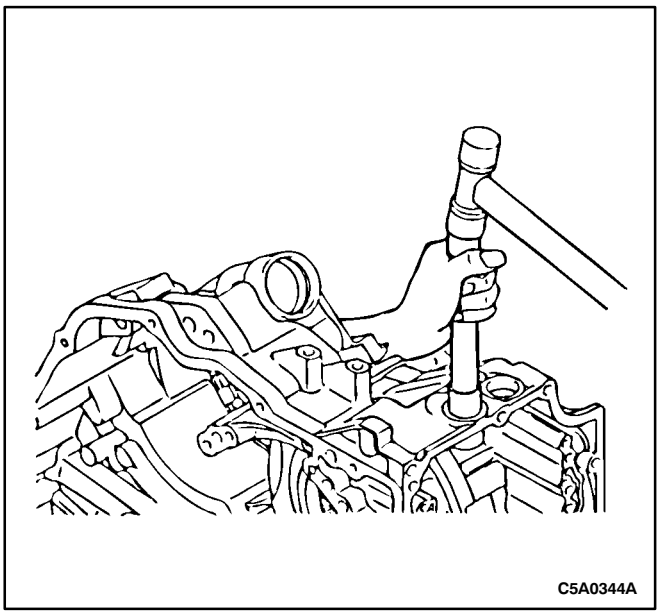

Notice: Apply TOTAL FLUID HX to the seal and seal bore.

31. Using a seal driver, install a new manual valve lever oil seal.

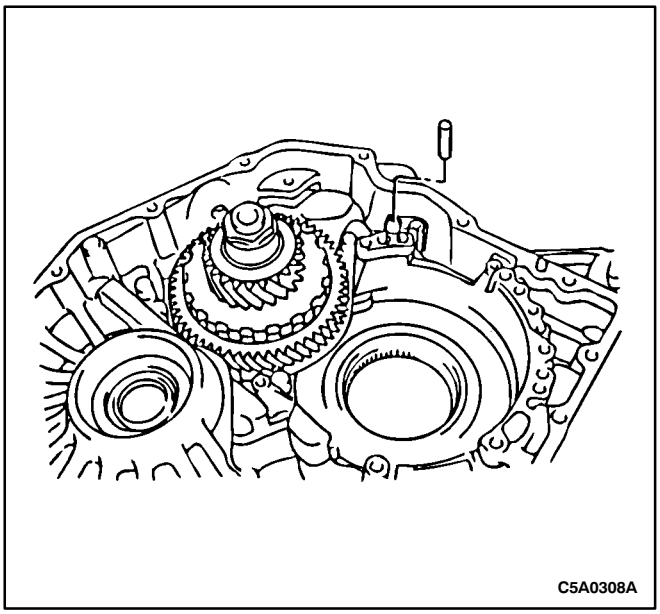

32. Install the parking lock pin

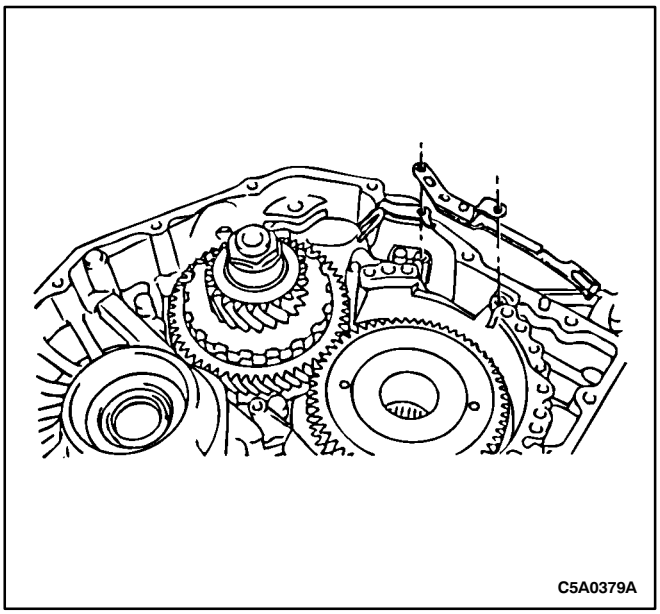

33. Install the cam plate, detent spring and the parking lock rod. Install the detent spring bolts, but do not tighten at this time.

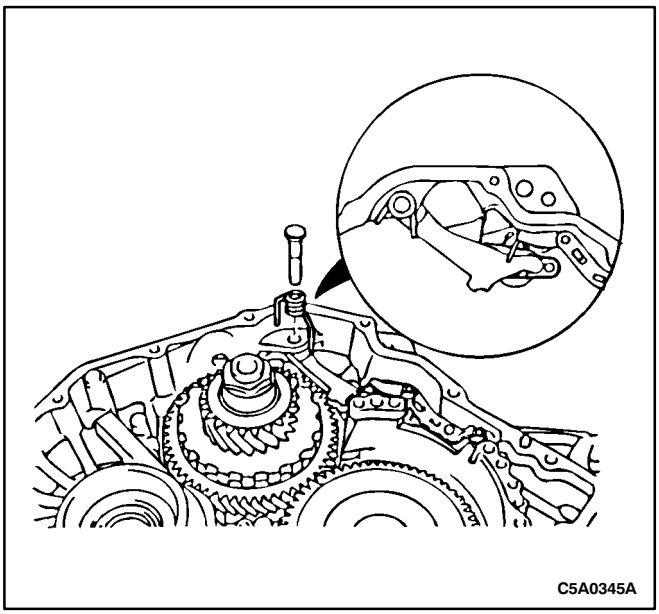

Notice: Make sure the cam plate and the parking pawl spring are in the positions shown.

34. Install the parking lock pawl. Place the spring on the parking lock pawl shaft and install them into the transaxle case.

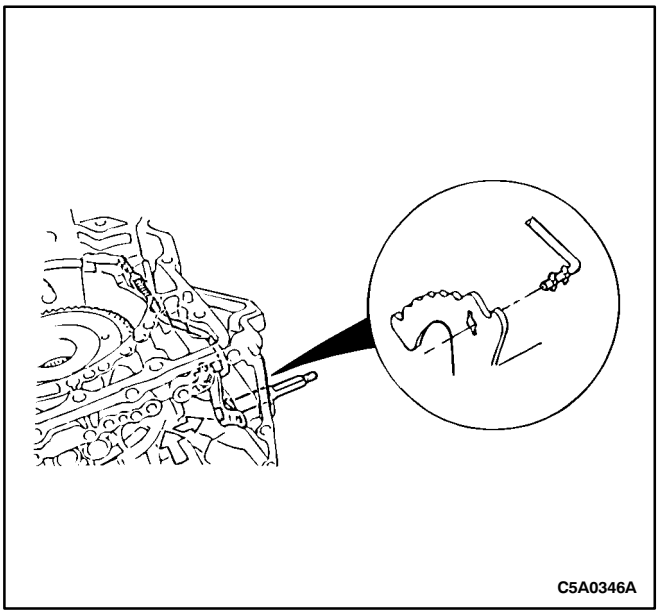

Notice: Check that the detent spring tip roller is centered on the manual valve lever.

35. Install the manual valve lever. Connect the parking lock rod to the manual valve lever. Place the detent lever on the manual valve lever.

Tighten

Tighten the detent spring bolts to 8-12 N•m (71-106 lb-in).

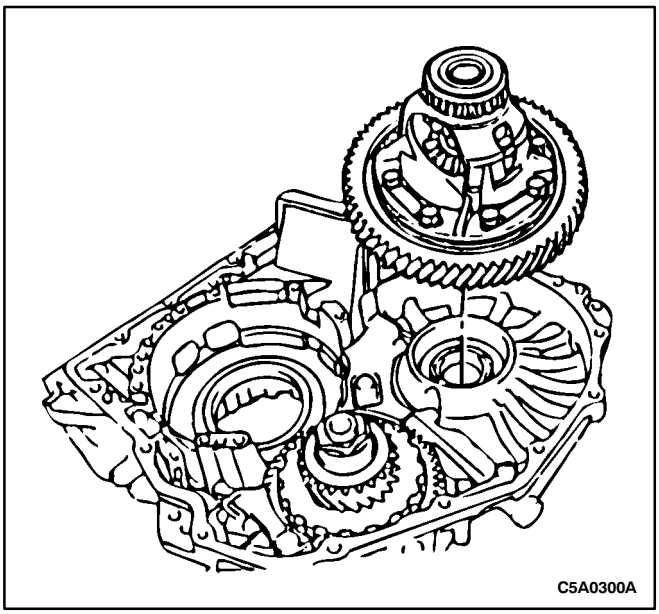

36. Install the differential case.

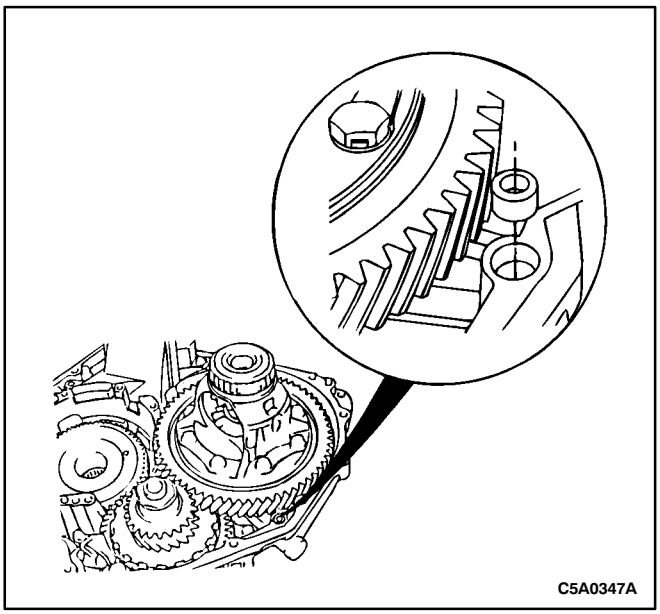

Notice: Apply TOTAL FLUID HX to the seal.

37. Install a new apply seal.

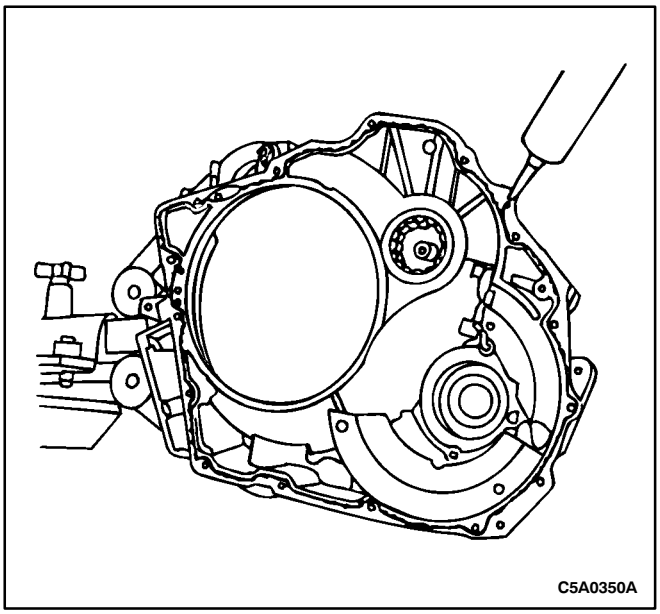

38. Apply sealer to the transaxle case.

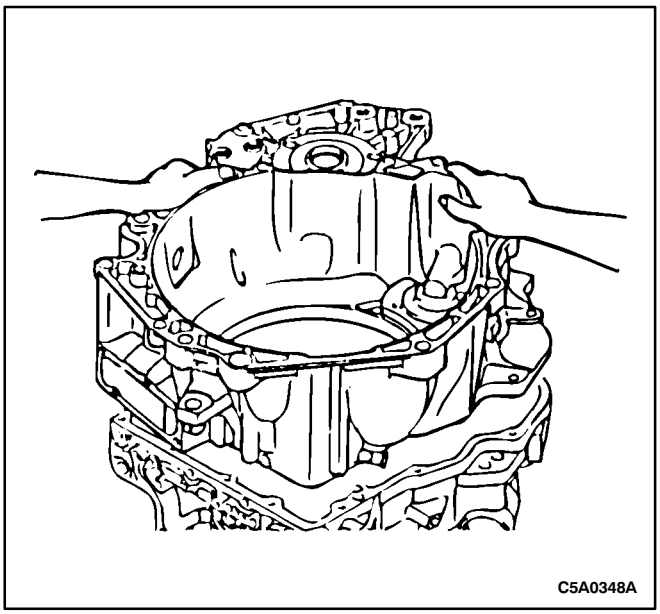

39. Install the transaxle housing to the transaxle case.

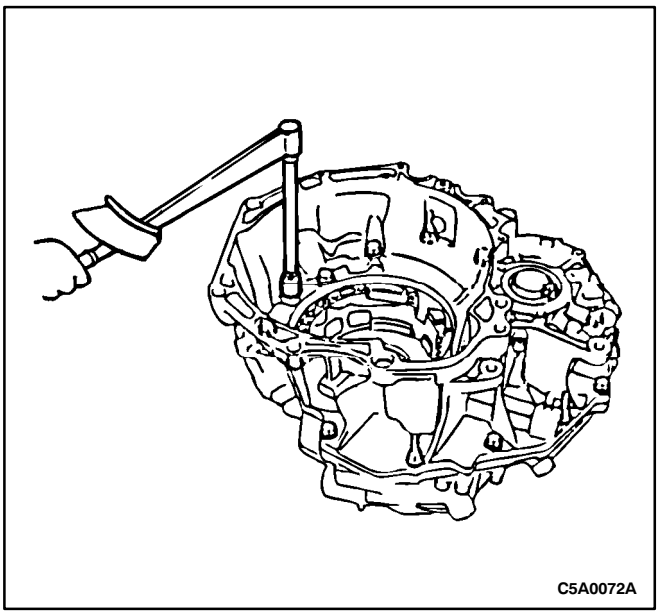

40. Install the housing-to-case bolts.

Tighten

Tighten the bolts to 23-35 N•m (17-26 lb-ft).

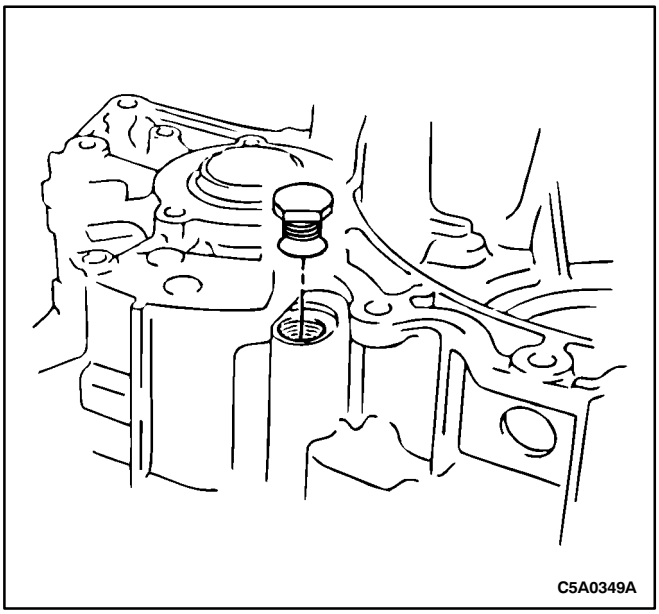

41. Install the drain plug with a new gasket.

Tighten

Tighten the plug to 23-55 N•m (17-40 lb-ft).

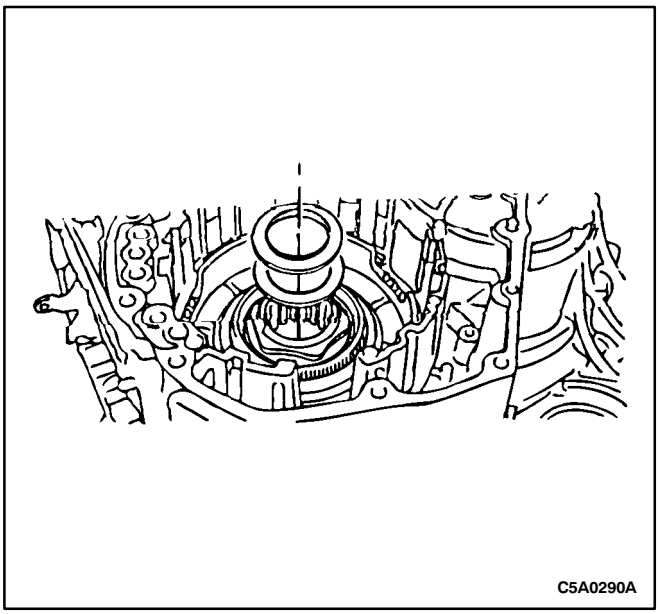

42. Place the thrust bearing and race on the front planetary ring gear flange.

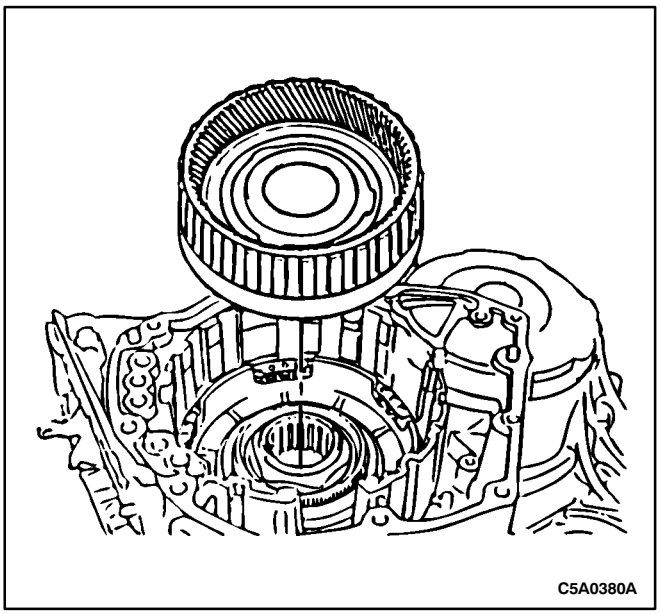

Notice: Make sure that the ring gear turns freely counterclockwise and locks clockwise.

43. Install the front planetary ring gear flange and the one-way clutch assembly.

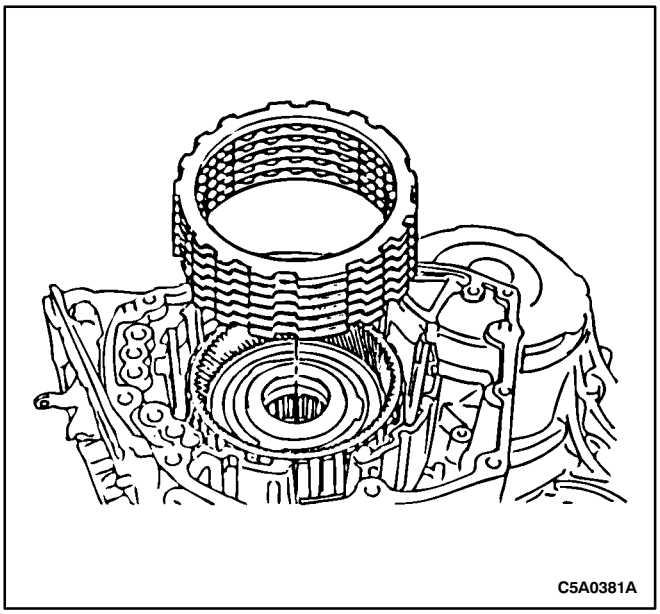

Notice: The installation order is: pressure-friction-steel-friction-steel-friction-steel-friction -steel-friction-pressure.

44. Install the low/reverse clutch pack and the clutch pressure plates.

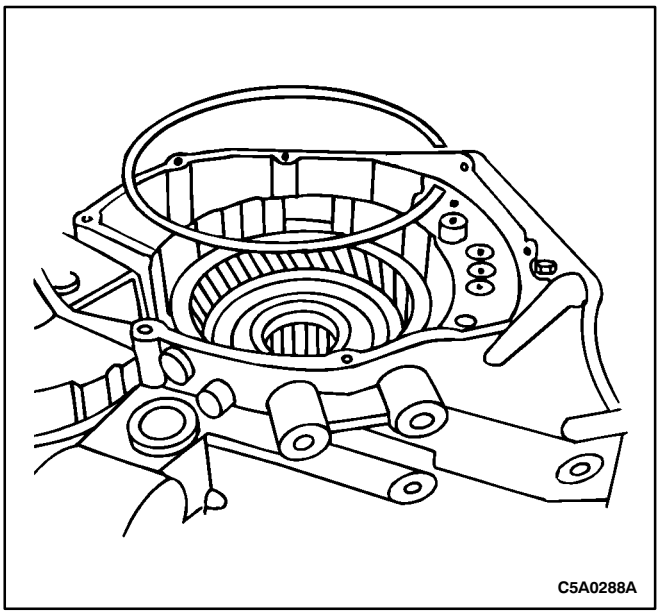

45. Install the snap ring.

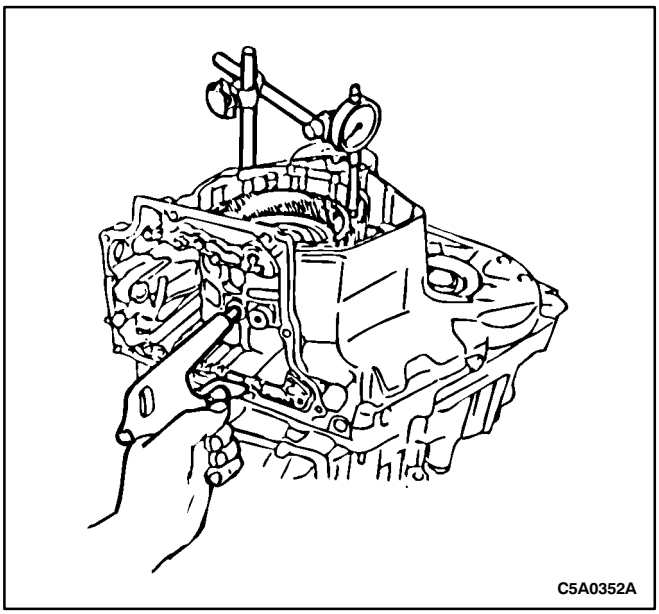

WARNING: USE CAUTION WHEN CHECKING COMPONENTS WITH COMPRESSED AIR OR INJURY MAY RESULT.

46. Verify the operation of the low/reverse brake piston.
    - Apply 396 kPa (57 psi) of compressed air into the oil passage shown and measure the piston stroke. The piston stroke is 1.75-2.55 mm (0.069-0.100 in). The clutch pack should make a solid apply sound, with no whistle or signs of leakage.

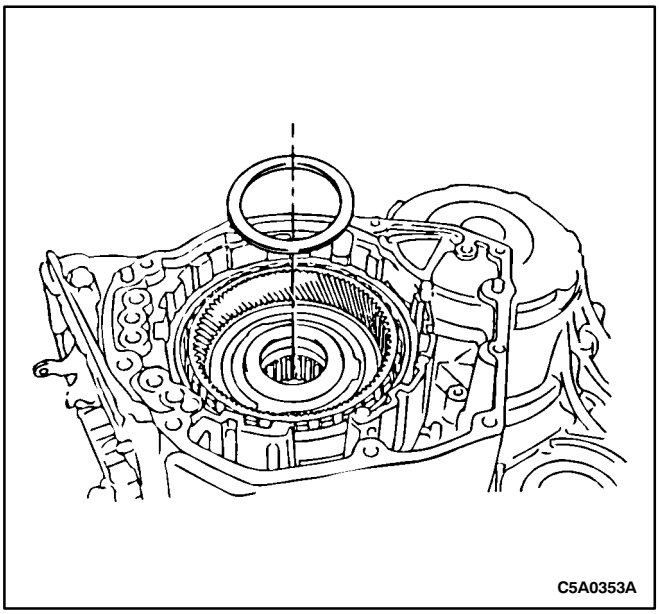

Notice: Apply Transjel Assembly Lubricant J-36850 or equivalent to the thrust washer before installing.

47. Install the thrust washer.

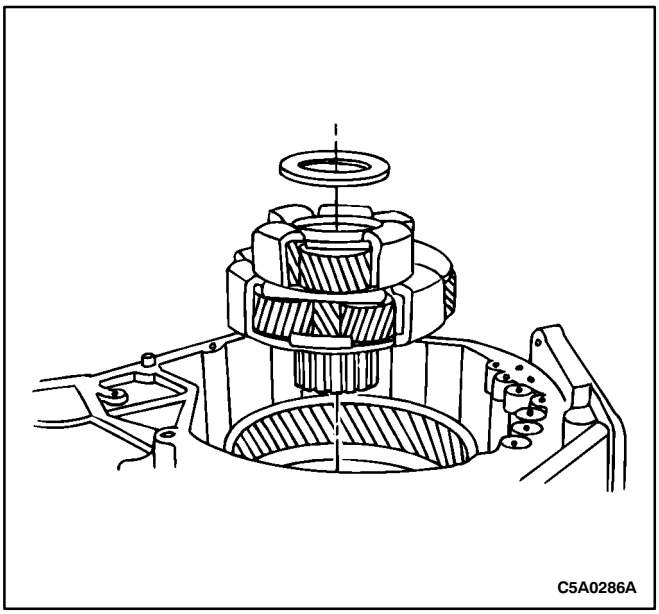

Notice: Apply Transjel Assembly Lubricant J-36850 or equivalent to the thrust washer before installing.

48. Install the planetary carrier and the thrust washer.

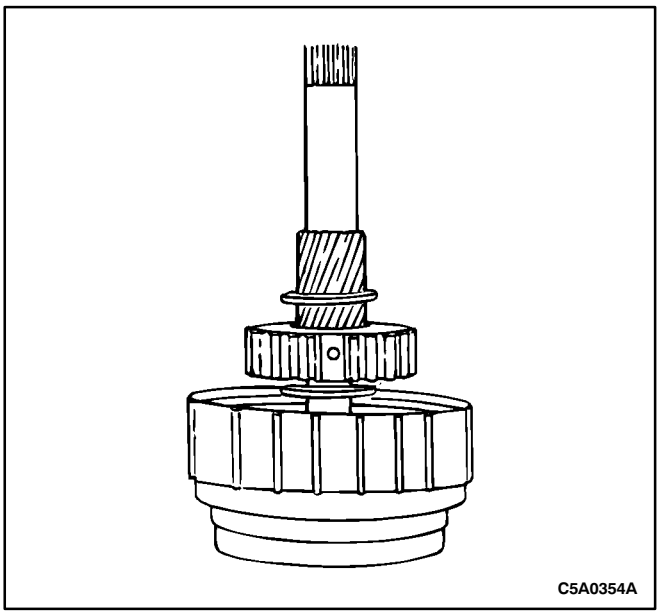

Notice: Apply Transjel Assembly Lubricant J-36850 or equivalent to the thrust bearing before installing.

Notice: Align the teeth of the clutch friction plates.

49. Install the planetary sun gear and thrust washer into the forward/direct clutch. Place the thrust bearing on the planetary sun gear.

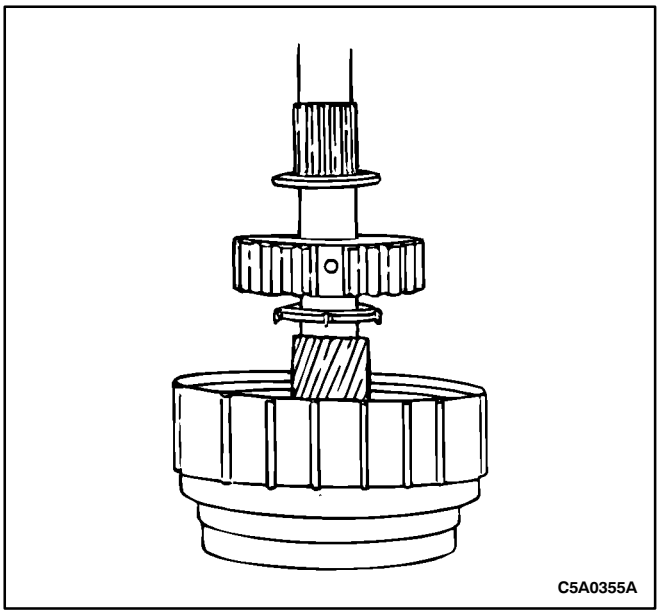

Notice: Apply Transjel Assembly Lubricant J-36850 or equivalent to the thrust bearing before installing.

Notice: Align the teeth of the clutch friction plates.

50. Install the rear planetary ring gear and thrust washer into the forward/direct clutch. Place the thrust bearing on the rear planetary ring gear.

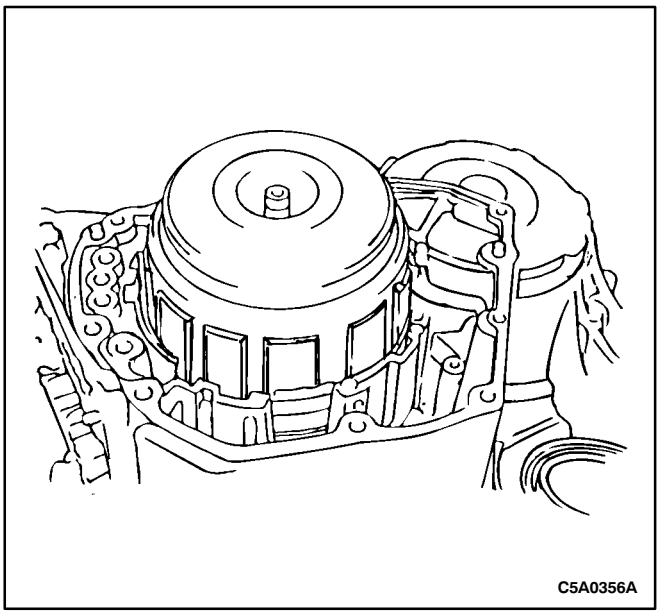

51. Install the forward/direct clutch assembly.

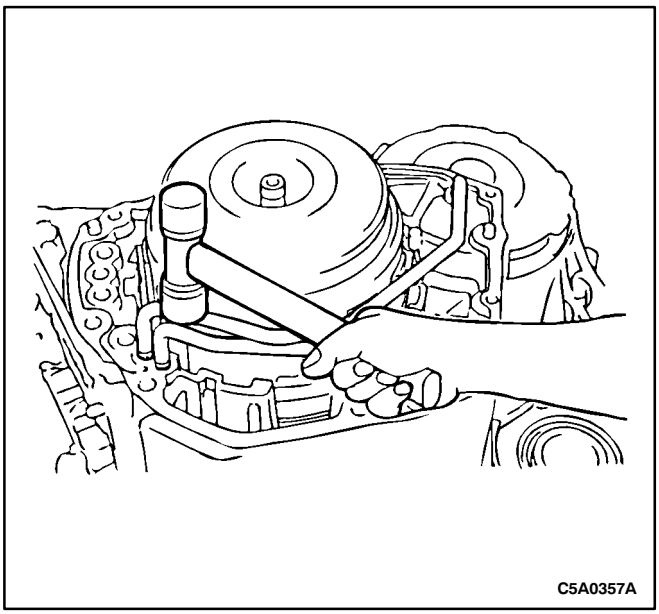

Caution: Do not bend or damage the tube.

52. Install the lubricant apply tubes.
    - Using a plastic hammer, tap the tube into place.

Tighten

Position the tube clamp and tighten the bolt to 4-7 N•m (35-61 lb-in).

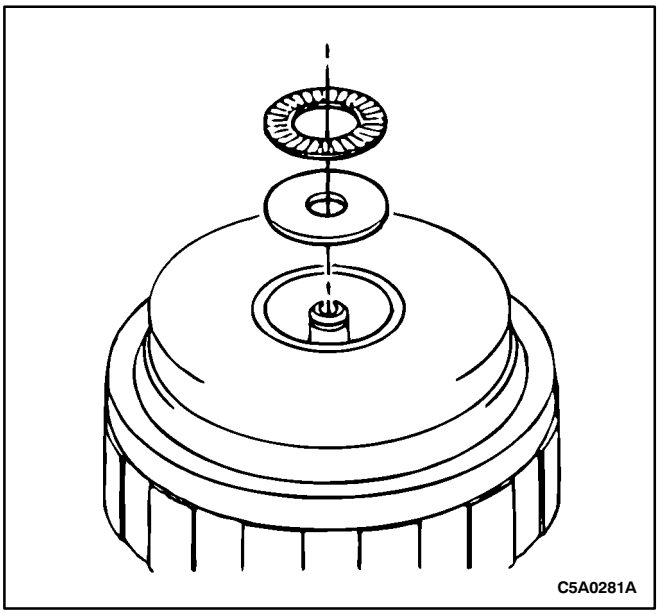

Notice: Apply Transjel Assembly Lubricant J-36850 or equivalent to the thrust bearing before installing.

53. Install the thrust bearing and race.

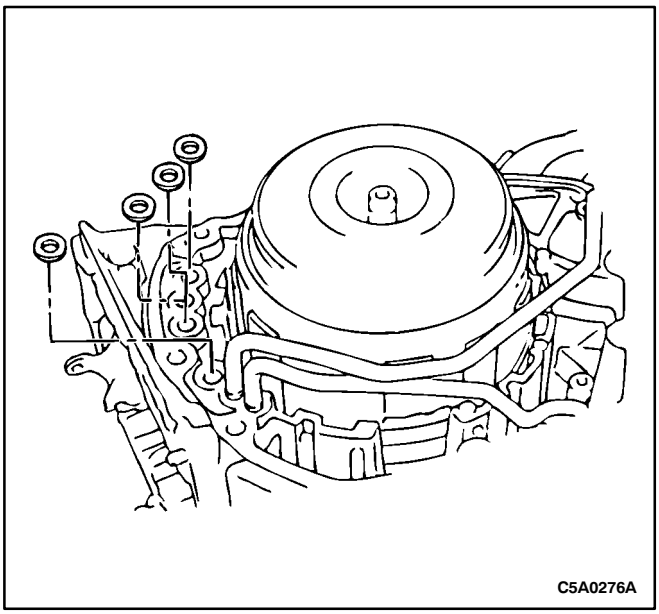

Notice: Apply Transjel Assembly Lubricant J-36850 or equivalent to the seals before installing.

54. Install four new apply seals.

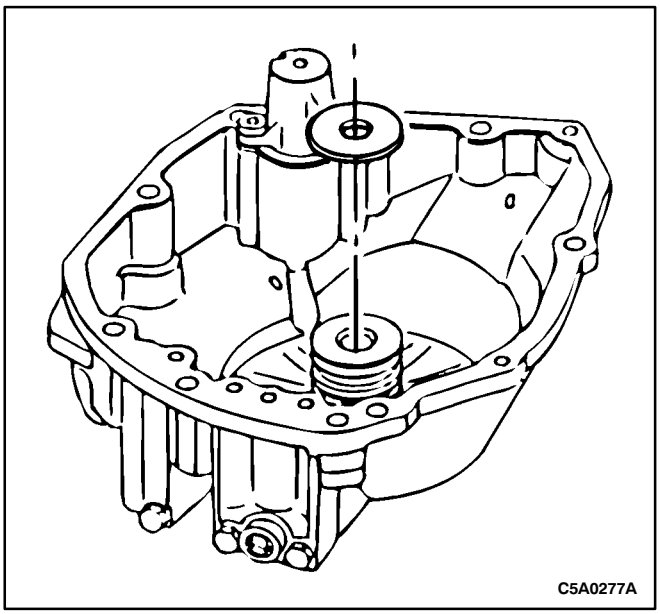

55. Install the thrust washer on the rear case.

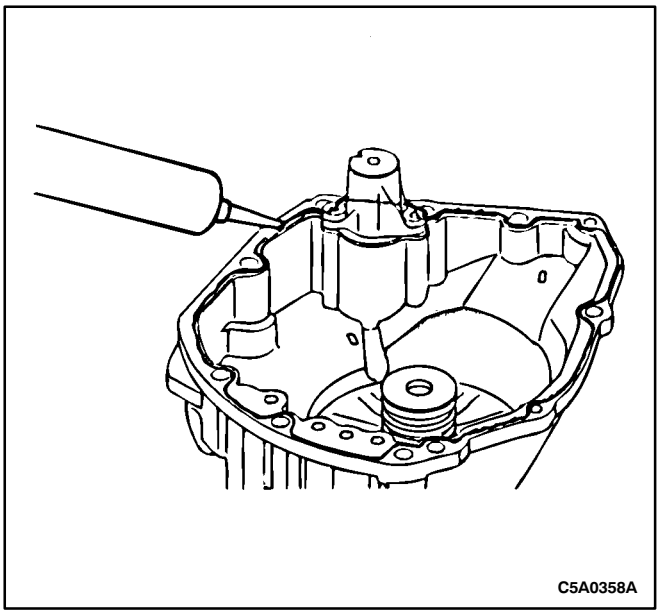

56. Apply sealer to the rear case.

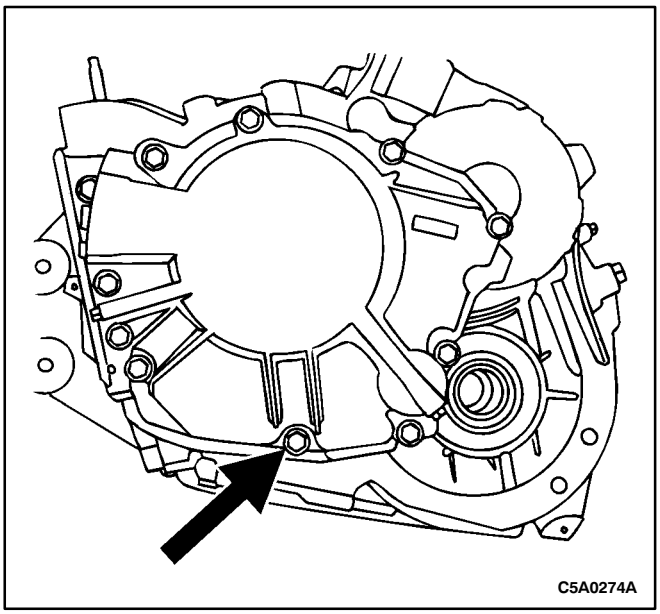

57. Install the rear case.

Tighten

Tighten the M6 bolts to 8-12 N•m (71-106 lb-in) and the M8 bolts to 20-29 N•m (15-22 lb-ft).

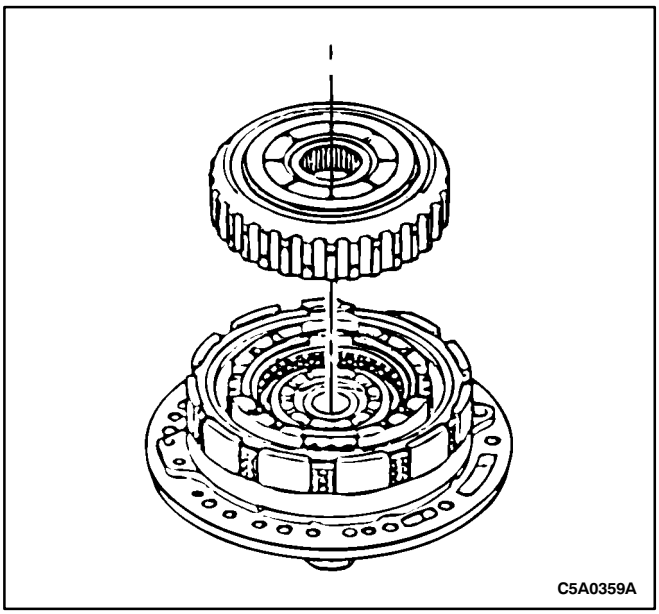

58. Install the brake hub and one-way clutch assembly into the oil pump.

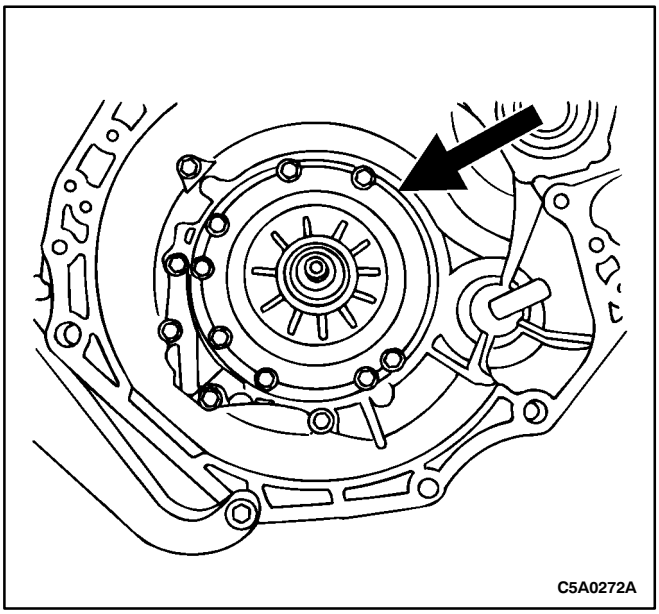

Notice: Apply TOTAL FLUID HX to the O-ring and oil pump bore.

Notice: Make sure there is some thrust play of the input shaft before installing the oil pump.

Notice: Install the bolts evenly and gradually.

59. Install the oil pump.
    - Install the oil pump through the input shaft with the transmission in the horzontal position. Lightly press the oil pump into the transaxle case.

    Tighten

    Tighten the bolts to 20-29 N•m (15-22 lb-ft).

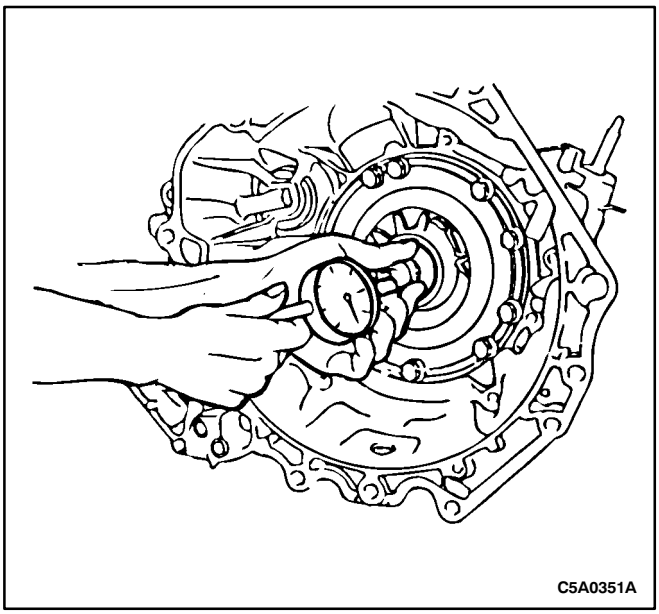

60. Using a dial indicator, measure the thrust play of the input shaft. The thrust play should be 0.372-0.90 mm (0.005-0.035 in).

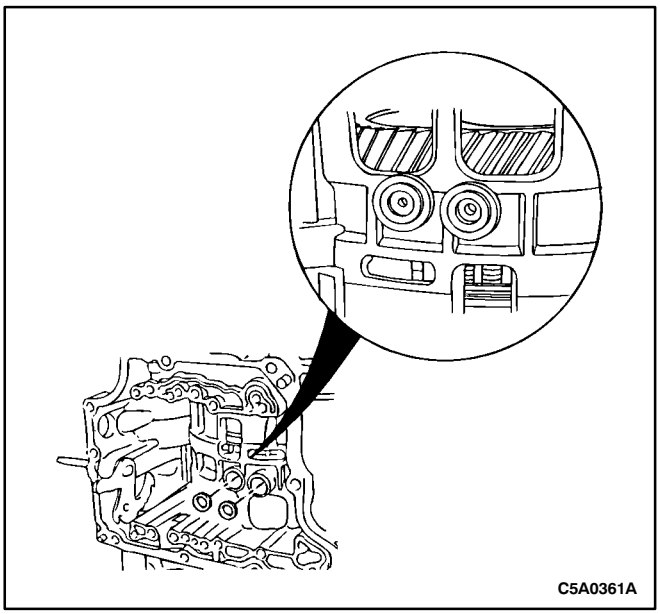

Notice: Apply Transjel Assembly Lubricant J-36850 or equivalent to the seals before installing.

61. Install two new apply seals.

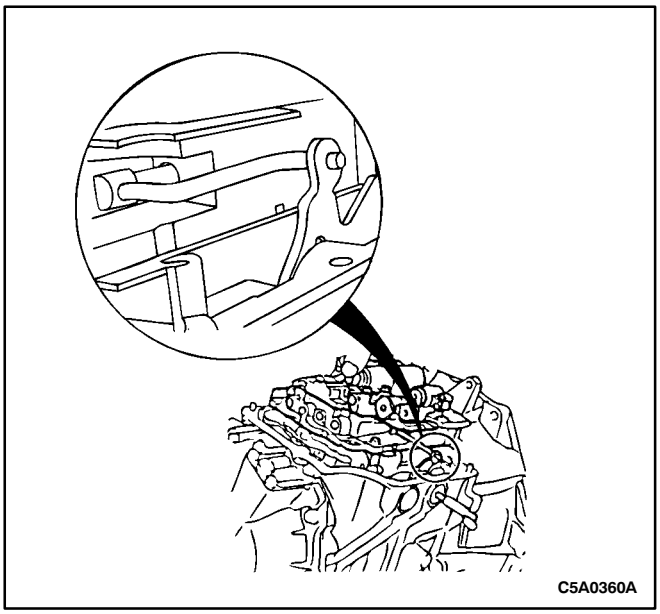

62. Install the valve body.
    - Holding the valve body in place, connect the manual valve connecting rod to the manual detent lever.

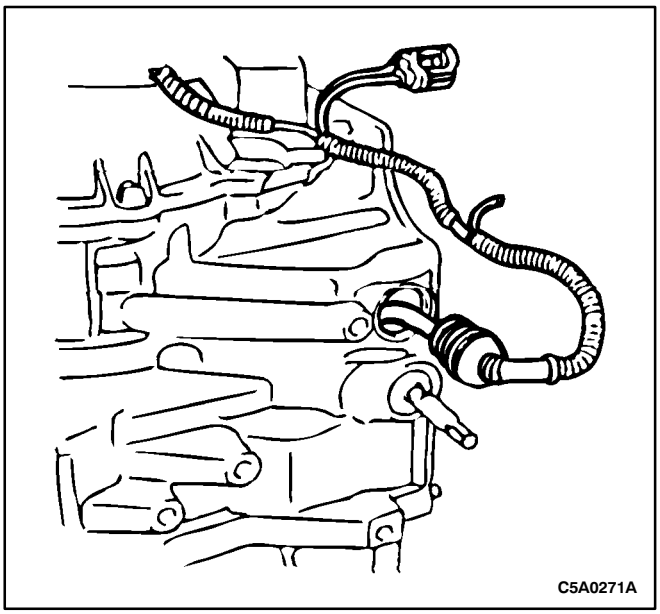

63. Install the solenoid wire harness.

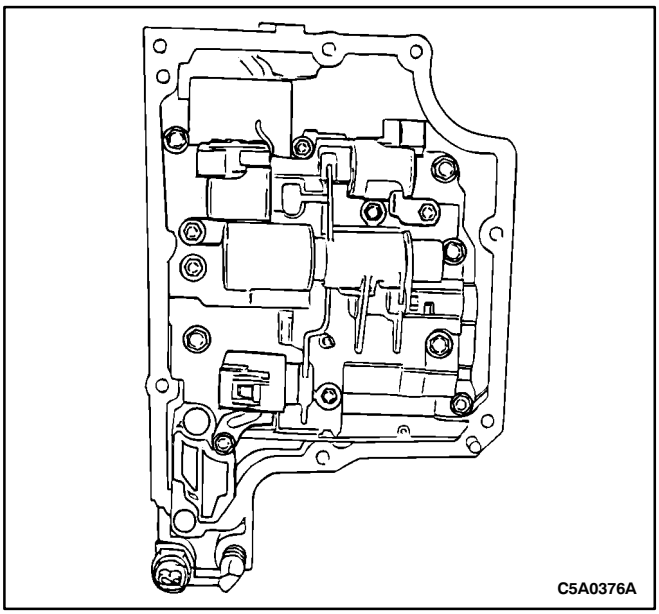

Notice: Tighten the bolts evenly and gradually.

64. Install the seven bolts

Tighten

Tighten the bolts to 6-7 N•m (53-62 lb-in).

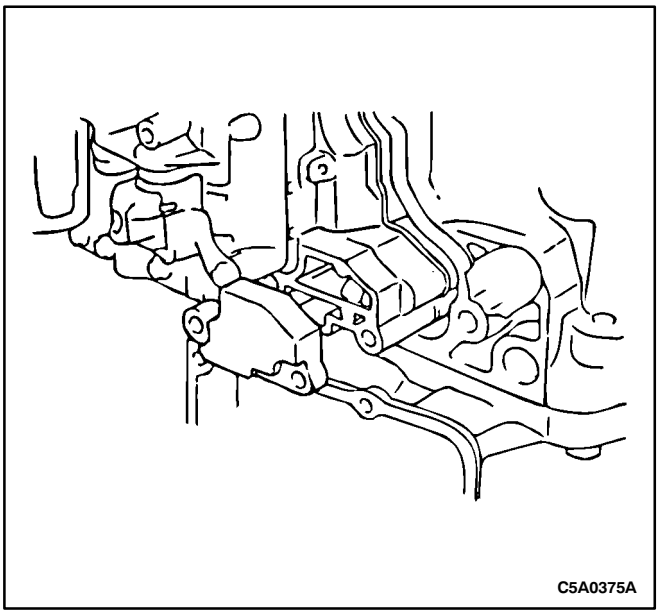

65. Install the suction cover with a new gasket.

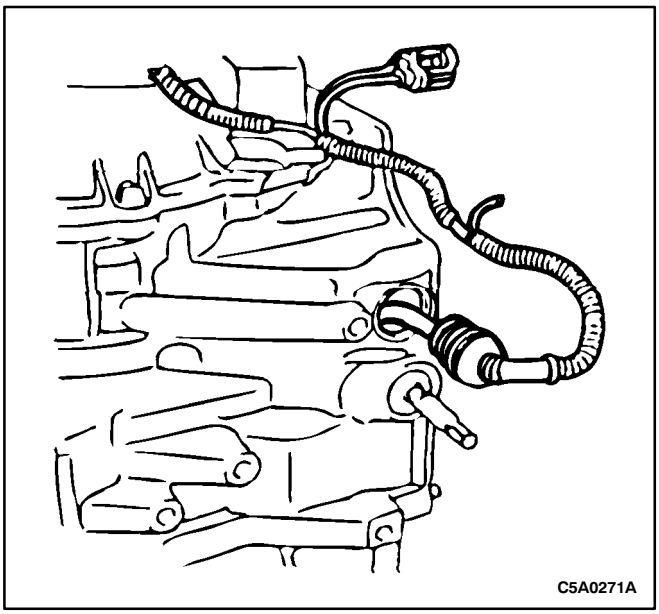

Notice: Install a new O-ring on the harness.

Notice: Apply TOTAL FLUID HX to the O-ring and to the harness case bore.

66. Install the solenoid wire harness.

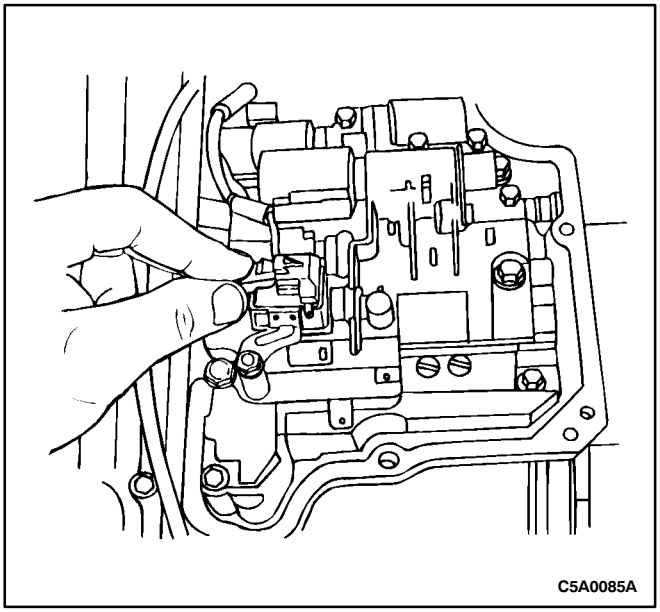

67. Connect the solenoid electrical connectors.

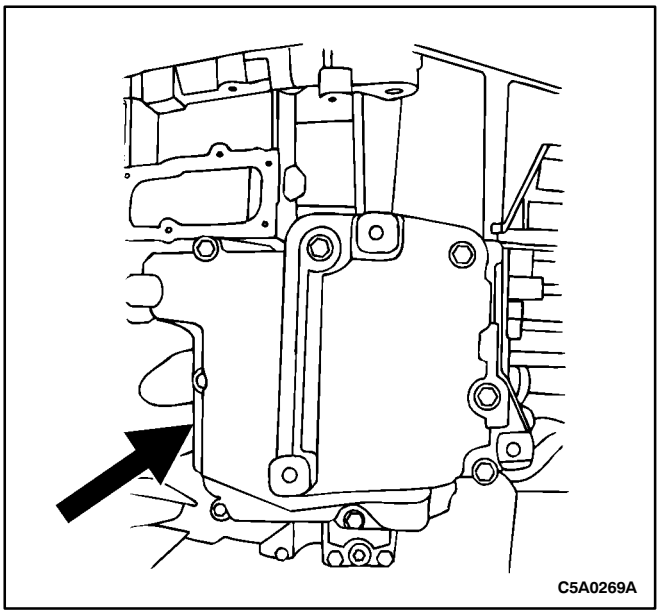

Notice: Use sealer on the side cover.

68. Install the valve body cover.

Tighten

Tighten the bolts to 20-30 N•m (15-22 lb-ft)

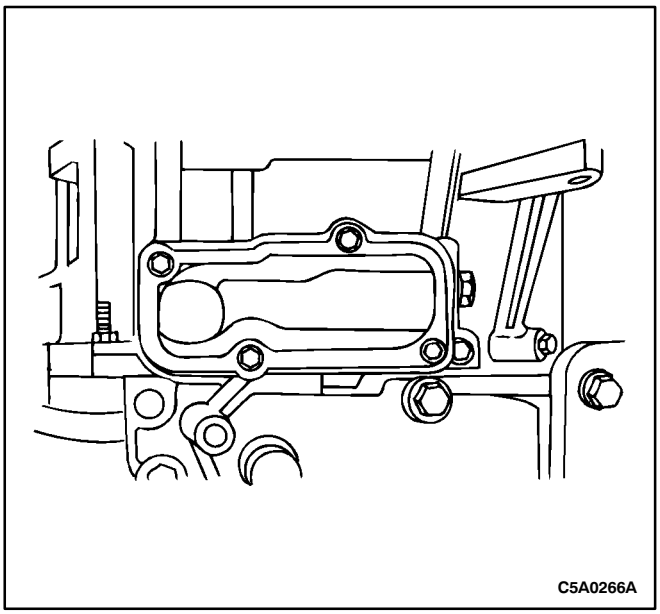

Notice: Use sealer on the housing cover.

69. Install the transaxle housing cover.

Tighten

Tighten the bolts to 6-9 N•m (53-78 lb-in).

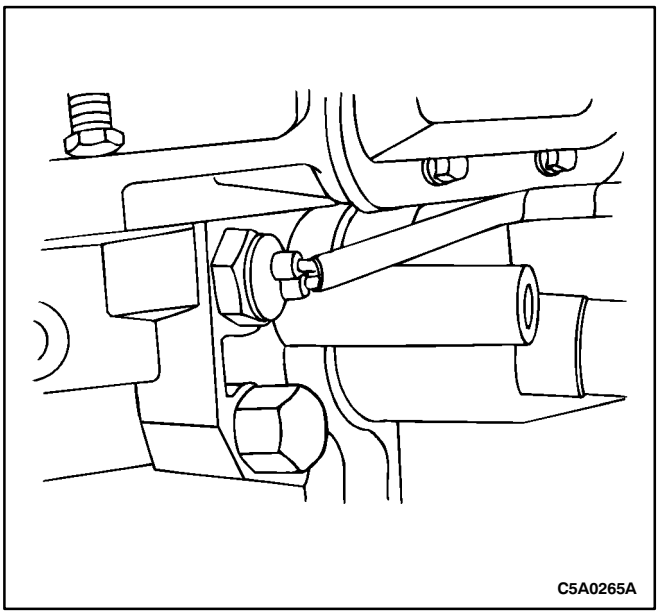

Notice: Apply TOTAL FLUID HX to the O-ring.

70. Install the Transmission Fluid Temperature (TFT) sensor with a new O-ring.

Tighten

Tighten the sensor to 7-13 N•m (62-115 lb-in).

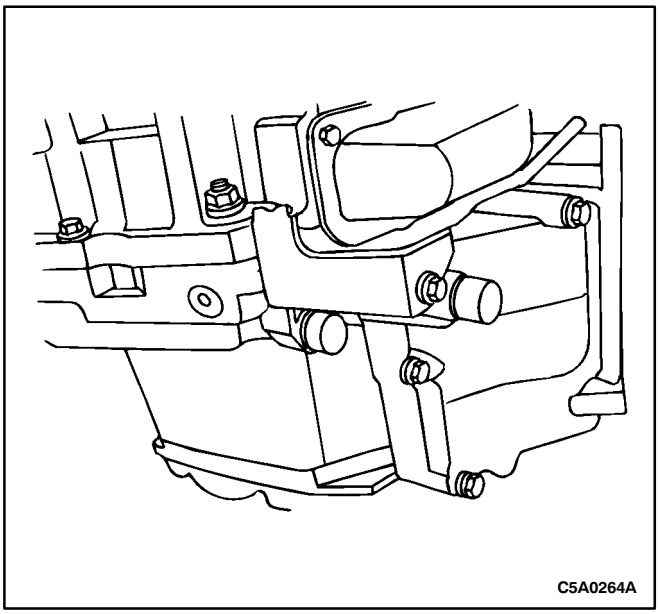

71. Install the TFT protector bracket.

Tighten

Tighten the bolts to 20-29 N•m (15-22 lb-ft).

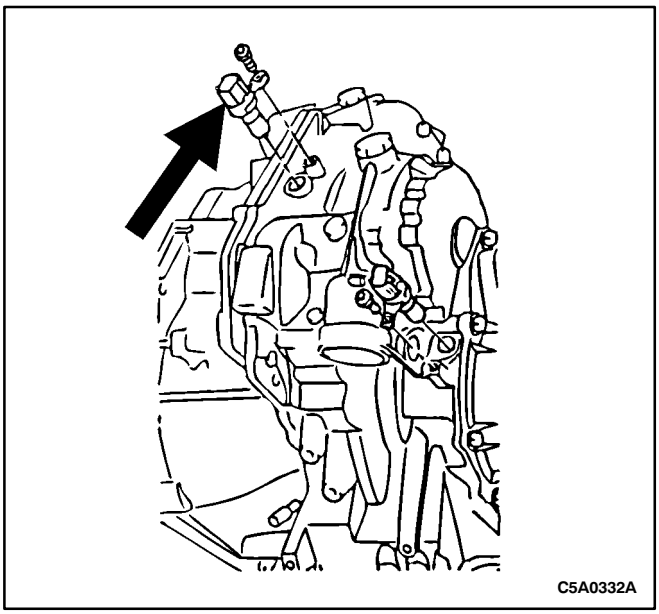

Notice: Install new O-rings on the input shaft speed (ISS) and output shaft speed (OSS) sensors.

Notice: Apply TOTAL FLUID HX to the O-rings and to the case bore of the ISS and OSS sensors.

72. Install the input shaft speed (ISS) and output shaft speed (OSS) sensors.

Tighten

Tighten the bolts to 4-7 N•m (35-62 lb-in).

73. Connect the wire harness to the ISS, OSS and to the TFT sensors.

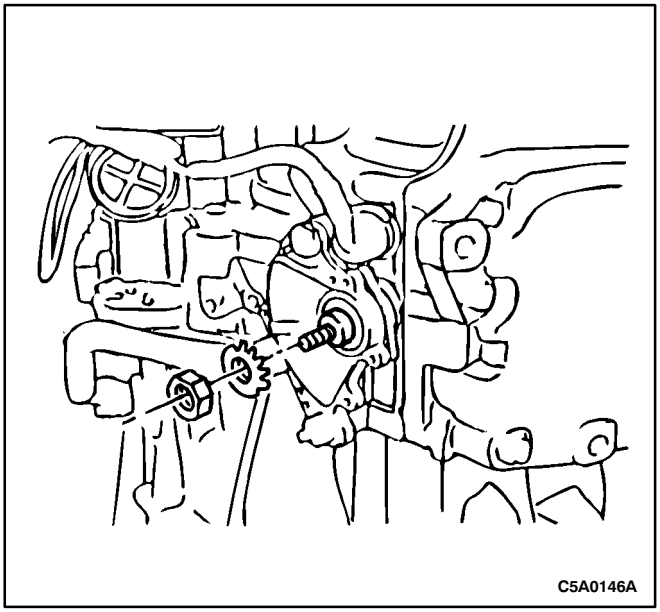

74. Install the park/neutral position (PNP) switch. Refer to “Park/Neutral Position (PNP) Switch” in this section.

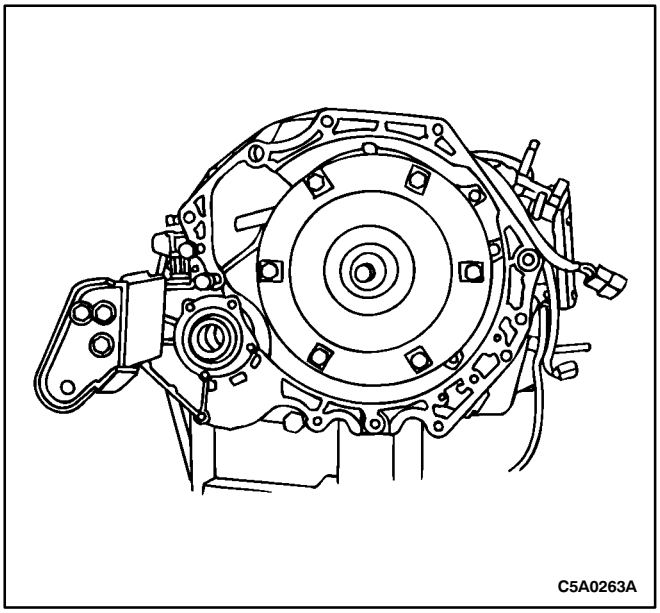

75. Install the torque converter.

GENERAL DESCRIPTION AND SYSTEM OPERATION

50-40LE AUTOMATIC TRANSMISSION

The 50-40LE automatic transmission is an electronically controlled four-speed transmission. It is designed for front-wheel-drive vehicles with a tranversely mounted engine.

The 50-40LE consists of three planetary gear trains with clutches, brakes and sun gears, and a primary and secondary shaft. Two of the three planetary gear trains make up the transmission primary shaft. The underdrive planetary gear is a single planetary gear train and the front planetary has a double set of gears.

The outer set has the short planetary gears and the inner set consists of long planetary gears. The planetary sun gear is common to the inner and outer planetary gears of the front planetary gear. The secondary shaft consists of the underdrive planetary gear train

The two intermediate gears transmit power from the primary to the secondary shaft. From the secondary shaft the power is then transmitted to the differential gear by the differential drive pinion gear and the counter driven gear.

The fluid pressure in the hydraulic system is created by the oil pump. The oil pump is attached to the transaxle case and is part of the second coast and brake clutch assembly. The oil pump also lubricates all moving parts of the transaxle, supplies fluid pressure to the shift components. The brakes and clutches are controlled by gear shifting valves which are controlled by the solenoids in the valve body. The transmission has four forward gears and one reverse gear.

The transmission is controlled by an electronic shift system. The Transmission Control Module (TCM) processes input signals and data received from engine and transmission sensors. From the information received, the TCM controls the transmission hydraulic system.

The electronic shift system consists of the following:

- Transmission control module (TCM)
- Shift solenoids (SS1 and SS2)
- Linear solenoid (pressure)
- Lockup solenoid
- Input shaft speed (ISS) sensor
- Output shaft speed (OSS) sensor
- Transmission Fluid Temperature (TFT) sensor
- Park/neutral position (PNP) Switch

Transmission Control Module (TCM)

The TCM primarily controls shift points and lockup engagement. It has a 35 pin-connector and is located on the passenger side under the instrument panel. Shifting is caused by two solenoids which are actuated by the TCM. The TCM also determines when the torque converter lock-up function is to be activated. Through the linear solenoid, when shifting occurs, the TCM actuates the solenoid valve to change the fluid pressure in the transmission.

Shift Solenoids

The shift solenoids are in the upper valve body. Both solenoids control shifting by opening and closing the fluid circulation system. The solenoids are grounded in the transmission and operate when they are supplied with battery voltage.

The battery voltage is controlled by the TCM, which sends a signal for up or down shifting, depending on vehicle speed, throttle position and driver demand.

Lockup Solenoid

The lockup solenoid is in the lower section of the upper valve body. The solenoid controls the torque converter lockup function. The solenoid is grounded in the transmission and operate when it is supplied with battery voltage.

The battery voltage is controlled by the TCM, which sends a signal for lockup engagement or disengagemaent according to vehicle speed, throttle position and driver demand.

Linear Solenoid

The linear solenoid is in the center of the upper valve body and regulates the transmission's fluid pressure system. It is internally grounded in the TCM and operates when it is supplied with battery voltage from the TCM, through the linear solenoid and back to the TCM.

The battery voltage is controlled by a varying current from the TCM. The strength of the current is a function of the throttle position.

Input Shaft Speed Sensor

The input shaft speed (ISS) sensor provides the TCM with the data on the speed of the transmission input shaft.

The input sensor is an electromagnetic type and measures the speed of the input shaft behind the torque converter by a toothed wheel on the forward/direct clutch drum.

The TCM uses the input sensor signal and vehicle speed to calculate shift times. Fuel pressure regulation, control of the torque converter lock-up function and engine torque reduction are based on the input shaft rpm and the vehicle speed received from the TCM.

Output Shaft Speed (OSS) Sensor

The output shaft speed (OSS) sensor provides the TCM with the data on the speed of the transmission output shaft.

The output sensor is an electromagnetic type and measures the speed of the output shaft by the parking lock ring gear.

The TCM uses the output sensor signal and vehicle speed to check shift times.

Transmission Fluid Temperature (TFT) Sensor

The TFT sensor provides the TCM with information on the transmission fluid temperature. The TFT sensor's integral resistance has negative temperature dependence (resistance declines as temperature rises) . The TCM uses information from the TFT sensor to calculate the gear shift points and to engage the torque converter lockup function.

Park/Neutral Position (PNP) Switch

The PNP switch is mounted to the manual detent lever on top of the transmission. Incorporated in the PNP switch are the backup lamp switch, starting interlock switch and switches to inform the TCM on gear engagement.

SECTION 5B

FIVE-SPEED MANUAL TRANSAXLE

CAUTION: Disconnect the negative battery cable before removing or installing any electrical unit or when a tool or equipment could easily come in contact with exposed electrical terminals. Disconnecting this cable will help prevent personal injury and damage to the vehicle. The ignition must also be in LOCK unless otherwise noted.

TABLE OF CONTENTS

Specifications 5B-2
Fastener Tightening Specifications 5B-2
Special Tools 5B-3
Special Tools Table 5B-3
Diagnosis 5B-5
Isolate Noise 5B-5
Symptom Diagnosis 5B-6
Component Locators 5B-8
Gears and Case 5B-8
Differential and Case 5B-10
Shift Linkage 5B-12
Maintenance and Repair 5B-14
On-Vehicle Service 5B-14
Checking Fluid Level 5B-14
Shift Linkage Adjustment 5B-14
Gearshift Lever 5B-16
Gearshift Tube, Boot, Bushing and/or Ring 5B-17
Control Shift Rod 5B-22
Linkage Lever and/or Bushings 5B-23
Speedometer Driven Gear 5B-29
Shift Lever Cover 5B-31
Drive Axle Seal 5B-33
Bracket 5B-33
Transaxle Assembly 5B-34
Unit Repair 5B-43
Major Component Disassembly 5B-43
Shaft and Cluster Gear 5B-54
Mainshaft 5B-57
Housing Case 5B-72
Differential 5B-75
Major Component Assembly 5B-83
Transaxle Mount 5B-91
General Description and System Operation 5B-93
Five Speed Manual Transaxle 5B-93

SPECIFICATIONS

FASTENER TIGHTENING SPECIFICATIONS

Application	N•m	Lb•Ft	Lb•In
Backup Lamp Switch	20	15	-
Bearing Plate Bolts	22	16	-
Bearing Retainer Bolts, Right Side	25	18	-
Bearing Adjusting Ring Retainer Plate Bolt	25	18	-
Center Rear Transaxle Support Bracket Bolts	90	66	-
Clutch Release Cylinder Bracket Bolts	75	55	-
Differential Cover Bolts	40	30	-
Fifth Gear Fork Bolts	22	16	-
Fifth Gearshift Connector Bolts	7	-	62
Gearshift Housing Bolts	6	-	53
Gearshift Lever Cover Bolts	22	16	-
Input Driveshaft Detent Screw	15	11	-
Left Front Transaxle Support Bracket Bolts	60	44	-
Left Rear Transaxle Support Bracket Bolts	60	44	-
Lower Transaxle to Engine Bolts	75	55	-
RingGear Bolts	70	52	-
Rod Clamp Bolt	14	-	124
Speedometer Driven Gear Bolt	5	-	44
Speedometer Housing Retaining Bolt	4	-	35
Support Bracket Bolt	7	-	62
Transaxle Bracket to Engine Bolt	90	66	-
Transaxle Bracket to Transaxle Bolts	90	66	-
Transaxle Bracket Mount to Center Member Bolts	65	48	-
Transaxle Cover Bolts (Bigger/Smaller)	20/15	15/11	-
Transaxle to Engine Upper Bolts	75	55	-
Transaxle Upper Brace Bolts	75	55	-

SPECIAL TOOLS

SPECIAL TOOLS TABLE

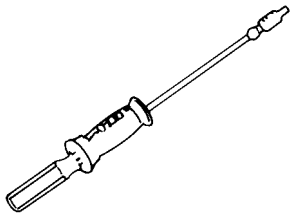 A103B110	**J-6125-B Slide Hammer**
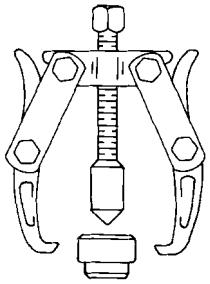 A103B003	**J-22888-20-A Bearing Puller with J-22888-35 Puller Legs**
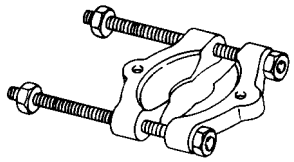 A103B112	**J-22912-01 Universal Bearing Puller**
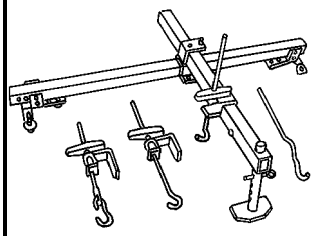 A102B152	**J-28467-B Engine-Support Fixture**

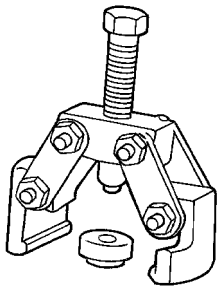 A103B163	**KM-553-A Fifth-Gear Puller**
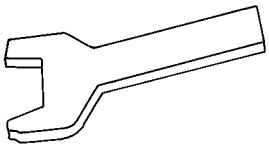 A103B028	**J-36633 Snap Ring Retainer**
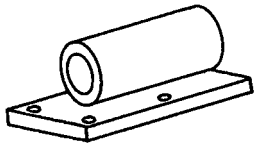 A103B002	**KM-113-2 Base**
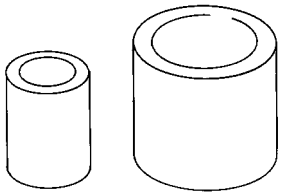 A103B025	**KM-334 Installer Sleeve**

SPECIAL TOOLS TABLE (Cont'd)

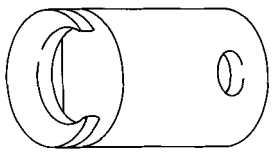 A103B013	**J-42469** **Shift Rod Remover**
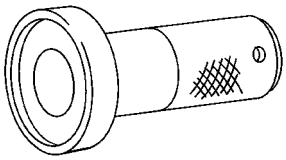 A103B007	**KM-519** **Ring Installer**
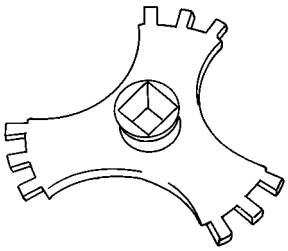 A103B008	**KM-520** **Remover/Installer**
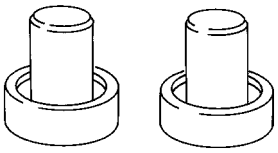 A103B009	**KM-522** **Installer**

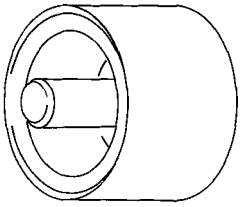 A103B017	**KM-525** **Installer**
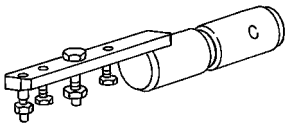 A103B019	**KM-552** **Fixture**
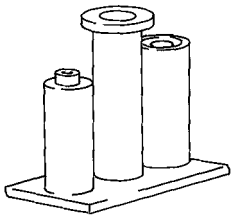 A103B021	**KM554** **Installer**

DIAGNOSIS

ISOLATE NOISE

Identify the cause of any noise before attempting to repair the clutch, the transaxle, or their related linkages.

Symptoms of trouble with the clutch or the manual transaxle include

- A great effort required to shift gears.
- The sound of gears clashing and grinding.
- Gear blockout.

Any of these conditions requires a careful analysis. Make the following checks before disassembling the clutch or the transaxle for repairs.

Road Travel Noise

Many noises that appear to come from the transaxle may actually originate with other sources, such as the

- Tires.
- Road surfaces.
- Wheel bearings.
- Engine.
- Exhaust system.

These noises may vary according to the

- Size of the vehicle.
- Type of the vehicle.
- Amount of insulation used in the body of the vehicle.

Transaxle Noise

Transaxle gears, like any mechanical device, are not absolutely quiet and will make some noise during normal operation.

To verify suspected transaxle noises,

1. Select a smooth, level asphalt road to reduce tire and resonant body noise.
2. Drive the vehicle far enough to warm up all the lubricants thoroughly.
3. Record the speed and the gear range of the transaxle when the noise occurs.
4. Check for noises with the vehicle stopped, but with the engine running.
5. Determine if the noise occurs while the vehicle operates in
   - Drive - under a light acceleration or a heavy pull.
   - Float - maintaining a constant speed with a light throttle on a level road.
   - Coast - with the transaxle in gear and the throttle partly or fully closed.
   - All of the above.

Bearing Noise

Differential Side Bearing Noise

Differential side bearing noise and wheel bearing noise can be confused easily. Since side bearings are pre-loaded, a differential side bearing noise should not diminish much when the differential/transaxle is run with the wheels off the ground.

Wheel Bearing Noise

Wheel bearings produce a rough growl or grating sound that will continue when the vehicle is coasting and the transaxle is in NEUTRAL. Since wheel bearings are not pre-loaded, a wheel bearing noise should diminish considerably when the wheels are off the ground.

Other Noise

Brinelling

A brinelled bearing causes a „knock” or „click” approximately every second revolution of the wheel because the bearing rollers do not travel at the same speed as the wheel. In operation, the effect is characterized by a low pitched noise.

A brinelled bearing is caused by excessive thrust which pushes the balls up on the pathway and creates a triangular-shaped spot in the bearing race. A brinelled bearing can also be caused from pressing one race into position by applying pressure on the other race.

A false indication of a brinelled bearing occurs as a result of vibration near the area where the bearing is mounted. Brinelling is identified by slight indentations, resulting in a washboard effect in the bearing race.

Lapping

Lapped bearing noise occurs when fine particles of abrasive materials such as scale, sand, or emery circulate through the oil in the vehicle, causing the surfaces of the roller and the race to wear away. Bearings that wear loose but remain smooth, without spalling or pitting, are the result of dirty oil.

Locking

Large particles of foreign material wedged between the roller and the race usually cause one of the races to turn, creating noise from a locked bearing. Pre-loading regular taper roller bearings to a value higher than that specified also can result in locked bearings.

Pitting

Pitting on the rolling surface comes from normal wear and the introduction of foreign materials.

Spalling

Spalled bearings have flaked or pitted rollers or races caused by an overload or an incorrect assembly that results in a misalignment, a cocking of bearings, or adjustments that are too tight.

After completing these checks, refer to the „Diagnosis Chart” in this section.

SYMPTOM DIAGNOSIS

Checks	Action
Check for a knock at low speeds.	● Replace any worn drive axle CV joints. ● Replace any worn side gear hub.
Check for a noise most pronounced on turns.	● Correct any abnormalities in the differential gear.
Check for a clunk upon acceleration or deceleration.	● Tighten any loose engine mounts. ● Replace any worn drive axle inboard joints. ● Replace any worn differential pinion shaft in the case. ● Replace any worn side gear hub in the case.
Check for a clunking noise in turns.	● Replace any worn outboard CV joint.
Check for a vibration.	● Replace any rough wheel bearing. ● Replace any bent drive axle shaft. ● Replace any out of round tires. ● Balance any unbalanced tire. ● Replace any worn CV joint in the drive axle shaft. ● Correct an excessive drive axle angle by adjusting the trim height.
Check for a noise in the NEUTRAL gear with the engine running.	● Replace any worn cluster bearing shaft. ● Replace any worn clutch release bearing. ● Replace any worn input shaft cluster gears. ● Replace any worn first gear/bearing. ● Replace any worn second gear/bearing. ● Replace any worn third gear/bearing. ● Replace any worn fourth gear/bearing. ● Replace any worn fifth gear/bearing. ● Replace any worn mainshaft bearings.
Check for a noise in the first gear (1) only.	● Replace any chipped, scored, or worn first gear constant mesh gears. ● Replace any worn first second gear synchronizer. ● Replace any worn first gear/bearing. ● Replace any worn differential gear/bearing. ● Replace any worn ring gear. ● Adjust, repair, or replace the shift lever and the rods.
Check for a noise in the second gear (2) only.	● Replace any chipped, scored, or worn second gear constant mesh gears. ● Replace any worn first second gear synchronizer. ● Replace any worn second gear/bearing. ● Replace any worn differential gear/bearing. ● Replace any worn ring gear. ● Adjust, repair, or replace the shift lever and the rods.
Check for a noise in the third gear (3) only.	● Replace any chipped, scored, or worn third gear constant mesh gears. ● Replace any worn third fourth gear synchronizer. ● Replace any worn third gear/bearing. ● Replace any worn differential gear/bearing. ● Replace any worn ring gear. ● Adjust, repair, or replace the shift lever and the rods.
Check for a noise in the fourth gear (4) only.	● Replace any chipped, scored, or worn fourth gear or output gear. ● Replace any worn third fourth gear synchronizer. ● Replace any worn fourth gear/bearing. ● Replace any worn differential gear/bearing. ● Replace any worn ring gear. ● Adjust, repair, or replace the shift lever and the rods.

Symptom Diagnosis (Cont'd)

Checks	Action
Check for a noise in the fifth gear (5) only.	● Replace any chipped, scored, or worn fifth gear or output gear. ● Repair any worn fifth gear synchronizer. ● Replace any worn fifth gear/bearing. ● Replace any worn differential gear/bearing. ● Replace any worn ring gear. ● Adjust, repair, or replace the shift lever and the rods.
Check for a noise in the reverse (R) gear only.	● Replace any chipped, scored, or worn reverse idler gear, idler gear bushing, input gear, or output gear. ● Replace any worn first second gear synchronizer. ● Replace any worn output gear. ● Replace any worn differential gear/bearings. ● Replace any worn ring gear.
Check for a noise in all gears.	● Add sufficient lubricant. ● Replace any worn bearings. ● Replace any chipped, scored, or worn input gear shaft or output gear shaft.
Check for the transaxle slipping out of gear.	● Adjust or replace the linkage as needed. ● Adjust, repair, or replace any binding shift linkage. ● Tighten or replace the input gear bearing retainer as needed. ● Repair or replace any worn or bent shift fork.
Check for a leak in the area of the clutch.	● Repair the transaxle casing. ● Replace any damaged release bearing guide.
Check for a leak at the center of the transaxle.	● Repair the transaxle casing. ● Repair the shift mechanism. ● Replace the damaged backup lamp switch.
Check for a leak at the differential.	● Adjust or replace the bearing retainers. ● Tighten or replace the differential cover. ● Adjust or replace the drive axle shaft seals.
Check for a hard shift.	● Replace any damaged release bearing guide. ● Adjust, repair, or replace the shift mechanism. ● Adjust, repair, or replace the clutch release system. ● Replace any chipped, scored, or worn fifth gear synchronizer. ● Replace any chipped, scored, or worn first second gear synchronizer. ● Replace any worn third fourth gear synchronizer. ● Adjust, repair, or replace the shift lever and the rods.
Check for a clashing of gears.	● Replace any damaged release bearing guide. ● Adjust, repair, or replace the clutch release system. ● Replace the chipped, scored, or worn input shaft/gear cluster gears. ● Replace any worn fifth gear synchronizer. ● Replace any worn fifth gear/bearing. ● Replace any worn first gear/bearing. ● Replace any worn first second gear synchronizer. ● Replace any worn second gear/bearing. ● Replace any worn third gear/bearing. ● Replace any worn third fourth synchronizer. ● Replace any worn fourth gear/bearing. ● Replace any worn reverse idler gear.

COMPONENT LOCATORS

GEARS AND CASE

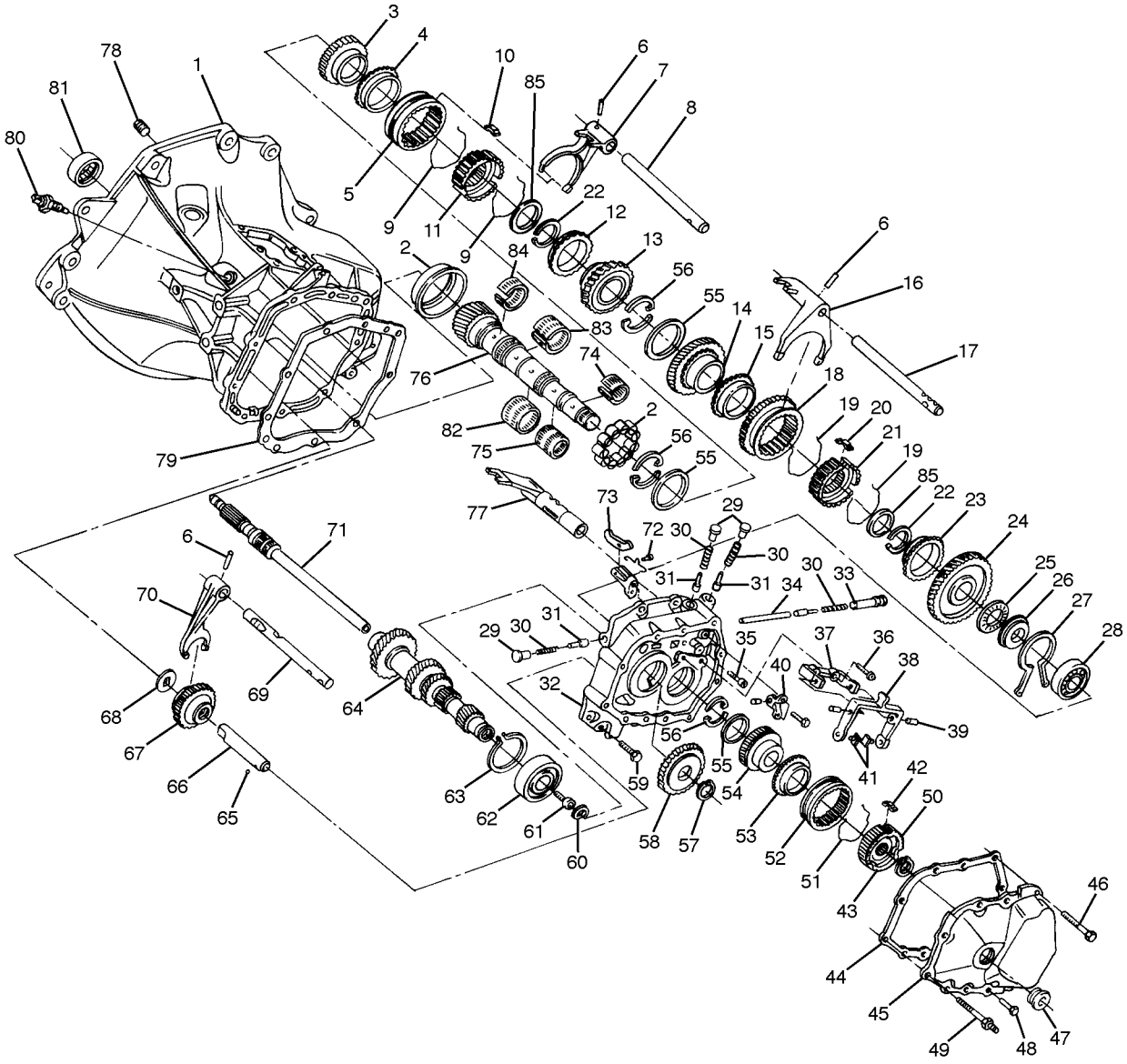

A103B162

1 Case
2 Mainshaft Bearing
3 Fourth Gear
4 Synchronizer Blocking Ring
5 Synchronizer Sleeve
6 Pin
7 Third-Fourth Gearshift Fork
8 Third-Fourth Gearshift Shaft
9 Spring
10 Key
11 Third-Fourth Synchronizer Gear
12 Synchronizer Blocking Ring
13 Third Gear
14 Second Gear
15 First-Second Gear Blocking Ring
16 First-Second Gearshift Fork
17 First-Second Gearshift Shaft
18 Synchronizer Hub Sleeve
19 Synchronizer Spring
20 Key
21 First-Second Synchronizer Gear
22 Snap Ring
23 Outer Blocking Ring
24 First Gear
25 First Gear Needle Bearing
26 Mainshaft Wear Plate
27 Snap Ring
28 Mainshaft Bearing
29 Shift Rod Plug (21.5 mm)
30 Spring
31 Shift Rod Lock Pin
32 Bearing Plate
33 Shift Rod Plug (50.4 mm)
34 Detent Rod Bolt
35 Bolt
36 Bolt
37 Support
38 Fifth Gearshift Fork
39 Pin
40 Fifth Gear Connector
41 Shoe
42 Key
43 Snap Ring
44 Gasket
45 Cover
46 Bolt
47 Plug
48 Bolt
49 Screw
50 Synchronizer Gear
51 Spring
52 Synchronizer Sleeve
53 Synchronizer Blocking Ring
54 Mainshaft Driven Fifth Gear
55 Ring
56 Thrust Washer
57 Ring
58 Input Drive Fifth Gear
59 Bolt
60 Cluster Gear Snap Ring
61 Screw
62 Cluster Shaft Bearing
63 Ring
64 Input Shaft Cluster Gear
65 Ball
66 Reverse Idler Gear Shaft
67 Reverse Idler Gear
68 Washer
69 Reverse Gear Fork Shaft
70 Reverse Gearshift Fork
71 Input Drive Shaft
72 Bolt
73 Fifth Gear Pawl
74 Fifth Gear Needle Bearing
75 First Gear Needle Bearing
76 Main Driven Shaft
77 Fifth Gearshift Lever
78 Hex Plug
79 Gasket
80 Reverse Lamp Switch
81 Input Shaft Bearing
82 Second Gear Needle Bearing
83 Third Gear Needle Bearing
84 Fourth Gear Needle Bearing
85 Washer

DIFFERENTIAL AND CASE

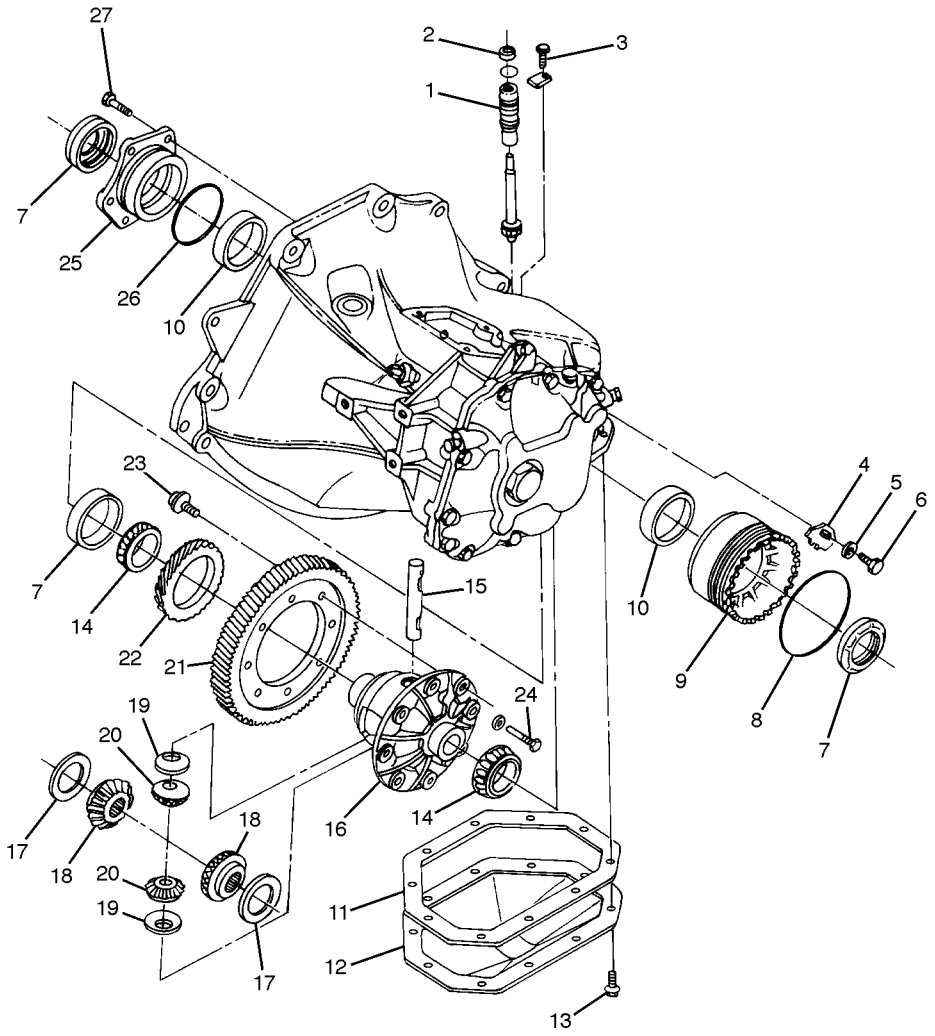

A103B161

1 Speedometer Driven Gear
2 Seal
3 Hex Bolt
4 Bearing Plate
5 Washer
6 Bolt
7 Seal
8 Seal
9 Bearing Adjusting Ring
10 Side Bearing Race
11 Housing Cover Gasket
12 Differential Cover
13 Bolt
14 Differential Bearing
15 Pinion Gear Shaft
16 Differential Housing
17 Thrust Washer
18 Side Gear
19 Washer
20 Pinion Gear
21 Ring Gear
22 Speedometer Drive Gear
23 Bolt
24 Pinion Shaft Lock Pin
25 Right Side Bearing Retainer
26 Seal
27 Retainer Bolt

SHIFT LINKAGE

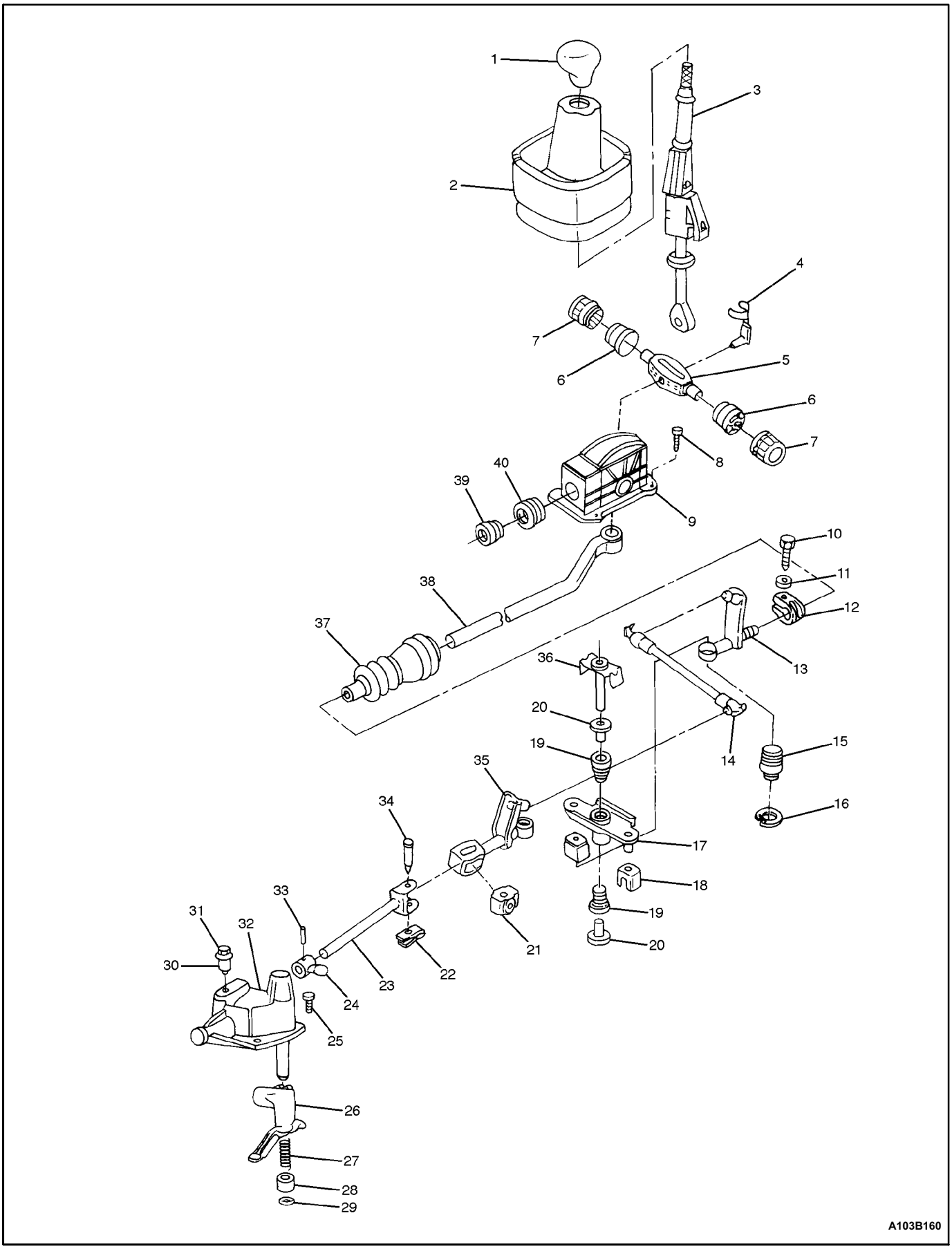

1 Gearshift Lever Knob
2 Gearshift Lever Boot
3 Gearshift Lever
4 Gearshift Lever Stop Clamp
5 Gearshift Lever Shaft
6 Gearshift Lever Stop Bushing
7 Gearshift Lever Stop Bushing
8 Bolt
9 Gearshift Housing
10 Shift Rod Clamp Bolt
11 Washer
12 Clamp
13 Linkage Adjuster Bolt
14 Gearshift Control Rod
15 Linkage Ball Socket
16 Circlip Ring
17 Linkage Reverse Lever
18 Gearshift Boot
19 Bushing
20 Bushing
21 Rod U-Joint Bushing
22 Clip
23 Gearshift Rod
24 Shift Finger Lever
25 Cover Bolt
26 Intermediate Lever
27 Shift Lever Thrust Spring
28 Bushing
29 Snap Ring
30 Oil Filler Plug
31 Oil Plug Cap
32 Gearshift Lever Cover
33 Pin
34 Bolt
35 Gearshift Adjuster Linkage
36 Shift Reverse Pivot Bolt
37 Boot
38 Gearshift Tube
39 Bushing
40 Gearshift Tube Bearing

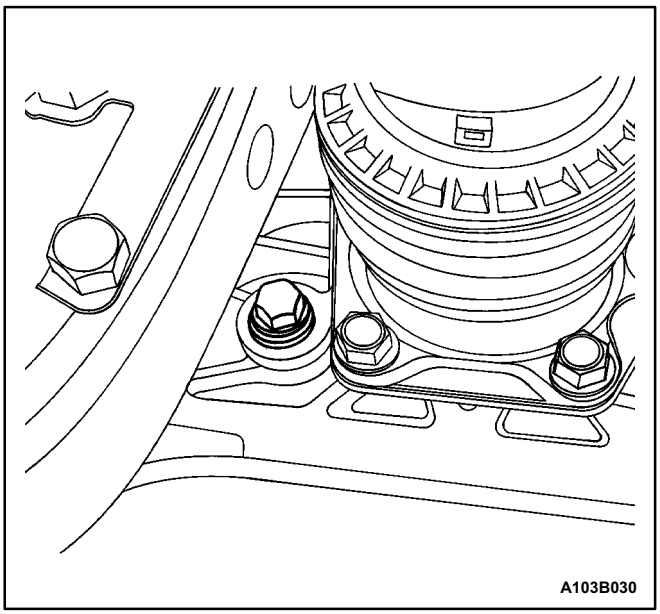

MAINTENANCE AND REPAIR

ON-VEHICLE SERVICE

CHECKING FLUID LEVEL

1. With the vehicle on a level surface and the fluid in the transaxle cold, remove the filler plug and check the fluid level. The fluid should come to the bottom edge of the plug hole.
2. If the level is low, add SAE 80 manual transaxle fluid through the filler plug hole until the fluid begins to run out.
3. Reinstall the filler plug and tighten it securely.

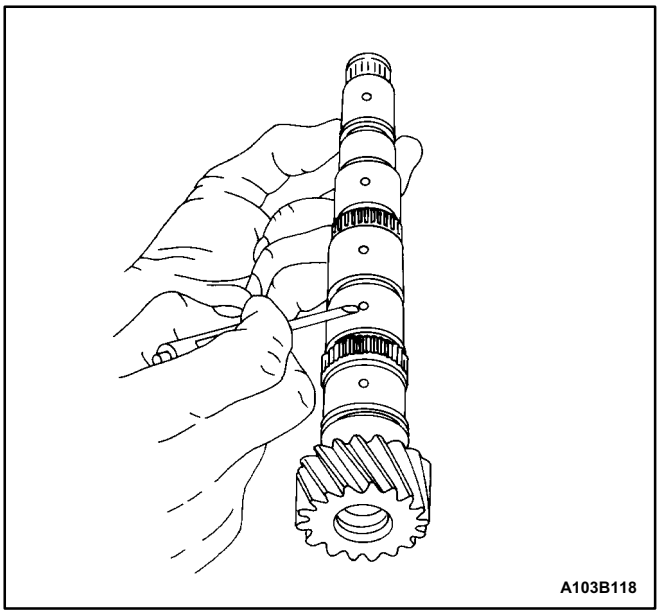

The speed gears and the synchronizer parts on this vehicle receive lubrication through specific passages in the mainshaft.

It takes 1.8 liters (1.90 quarts) to fill the transaxle completely.

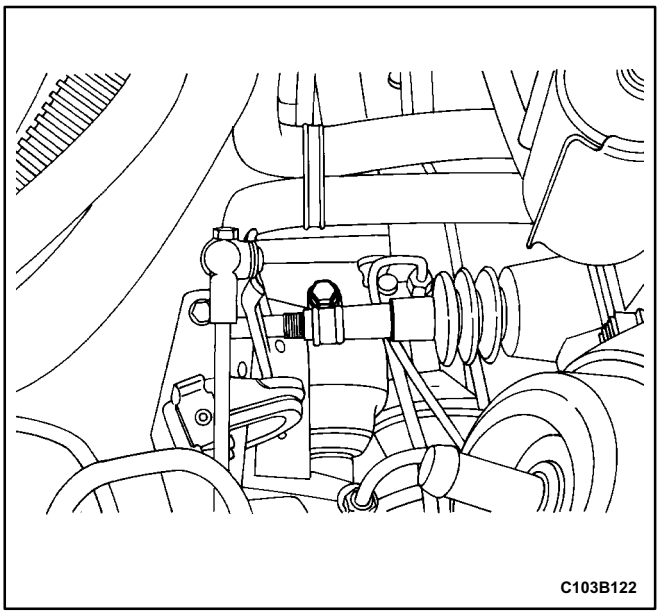

SHIFT LINKAGE ADJUSTMENT

1. Disconnect the negative battery cable.
2. Position the gearshift lever into NEUTRAL.

Important: All the gears must be easy to engage when the vehicle is stationary, the engine is running, and the clutch is disengaged.

3. Loosen the rod clamp bolt.

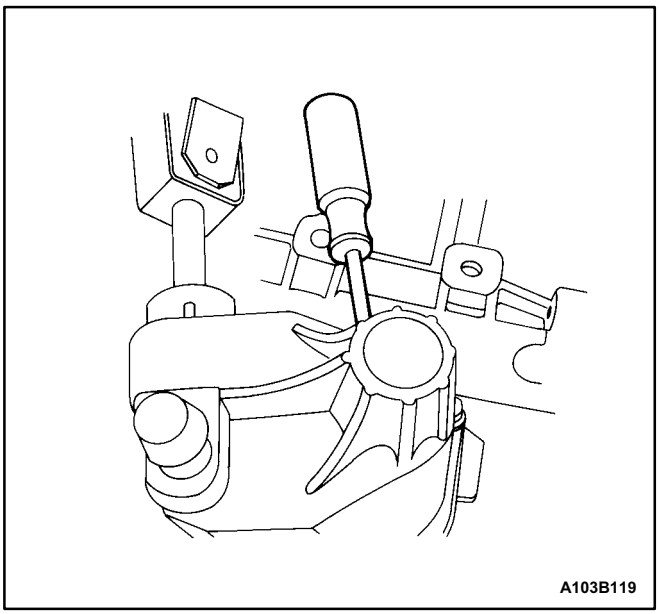

4. Remove the adjustment hole plug from the shift lever cover.
5. Turn the gearshift rod and fully insert a 5 mm (0.2 inch) gauge pin into the adjustment hole.

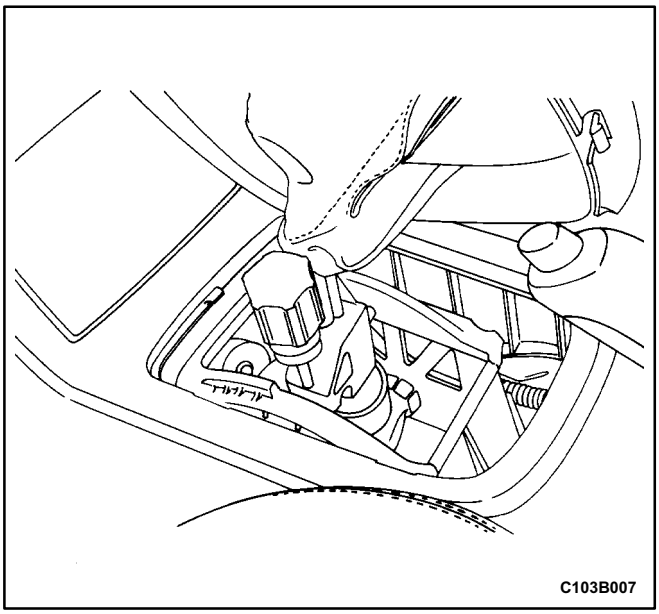

6. Remove the boot from the console.
7. Pull the boot upward to expose the shift control lever mechanism.
8. Position the gearshift lever close to the left side of the NEUTRAL position.
9. Insert a 5 mm (0.2 inch) gauge pin into the holes to align the gearshift lever with the gearshift lever housing.

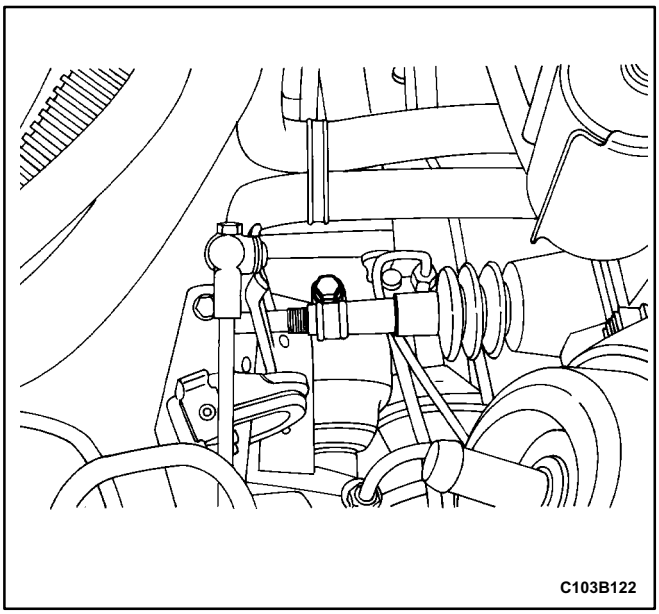

10. Tighten the rod clamp bolt.

Tighten

Tighten the rod clamp bolt to 14 N•m (124 lb•in).

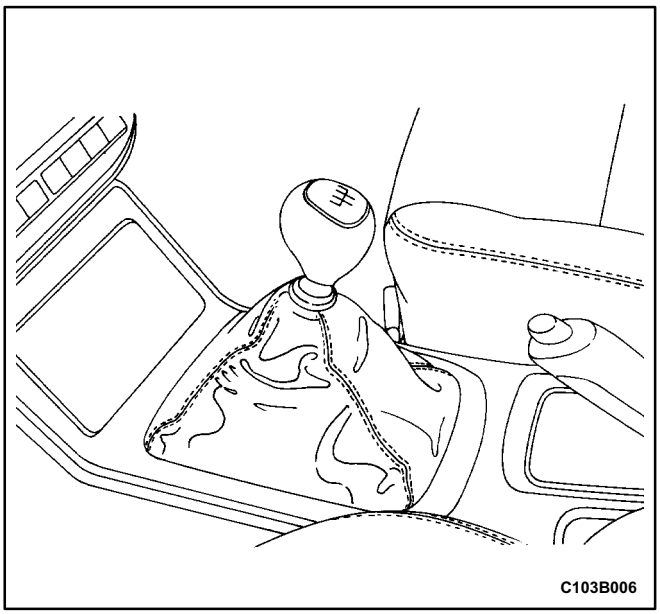

11. Remove the 5 mm (0.2 inch) gauge pin from the adjustment hole.
12. Install the adjustment hole plug.
13. Remove the 5 mm (0.2 inch) gauge pin from the gearshift lever.
14. Install the boot to the console.
15. Connect the negative battery cable.

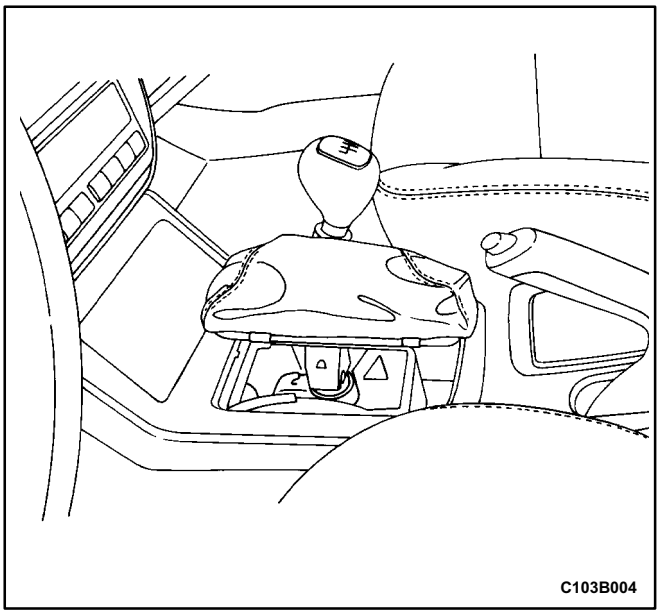

GEARSHIFT LEVER

Removal Procedure

1. Disconnect the negative battery cable.
2. Position the gearshift lever into NEUTRAL.
3. Disconnect the boot from the console cover.
4. Lift the console cover upward to expose the shift control lever mechanism.

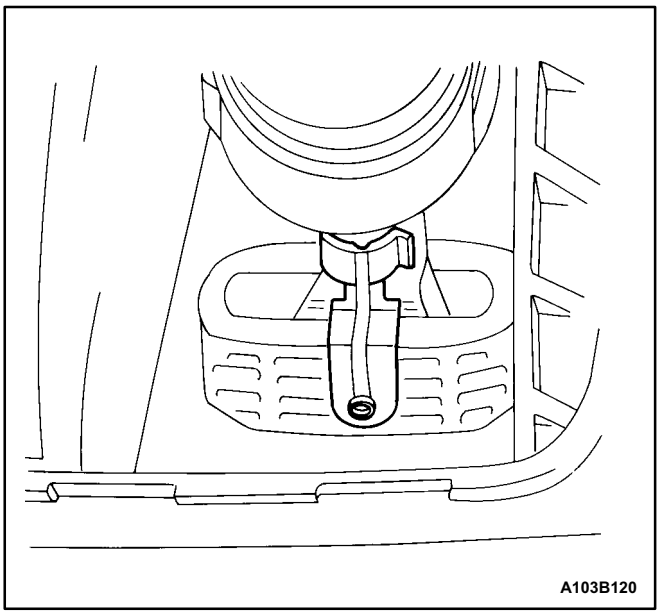

5. Rotate the gearshift lever stop clamp and remove it.
6. Remove the gearshift lever from the gearshift lever shaft.

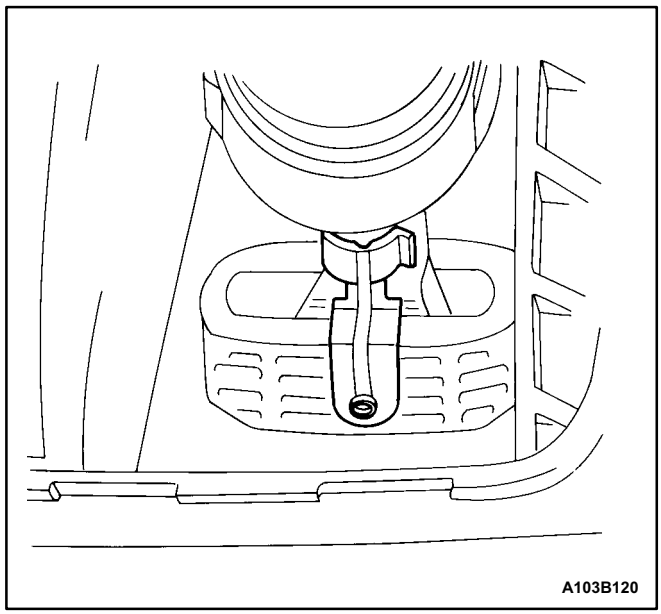

Installation Procedure

1. Install the gearshift lever into the gearshift lever shaft.
2. Install the gearshift lever stop clamp.
3. Rotate the gearshift lever stop clamp to secure it.

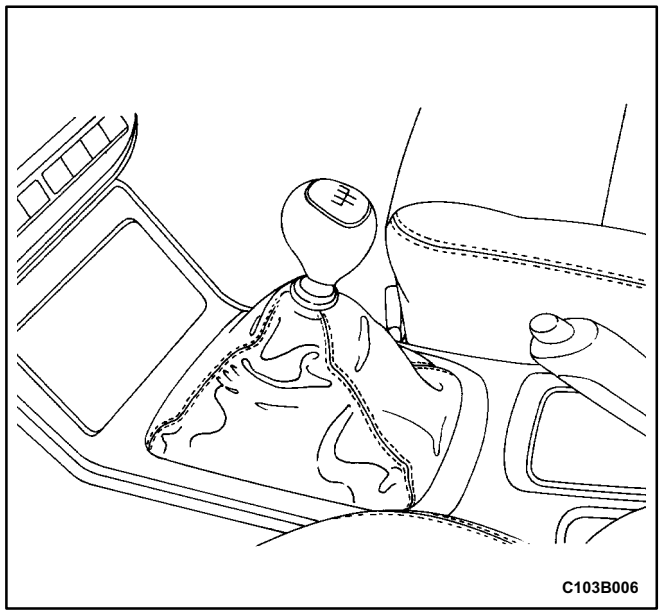

4. Lower the boot and connect it to the console cover.
5. Connect the negative battery cable.

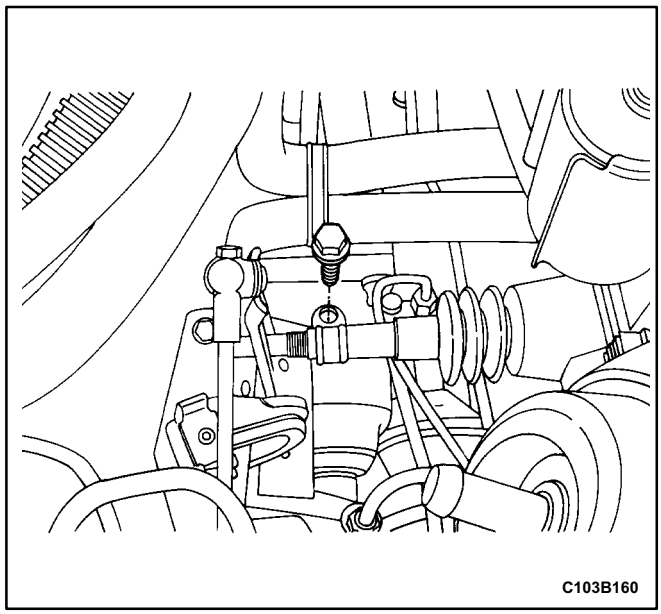

GEARSHIFT TUBE, BOOT, BUSHING AND/OR BEARING RING

(Left-Hand Drive Shown, Right-Hand Drive Similar)

Removal Procedure

1. Disconnect the negative battery cable.
2. Remove the rod clamp bolt.
3. Separate the linkage bolt from the gearshift tube.
4. Remove the rod clamp from the gearshift tube.

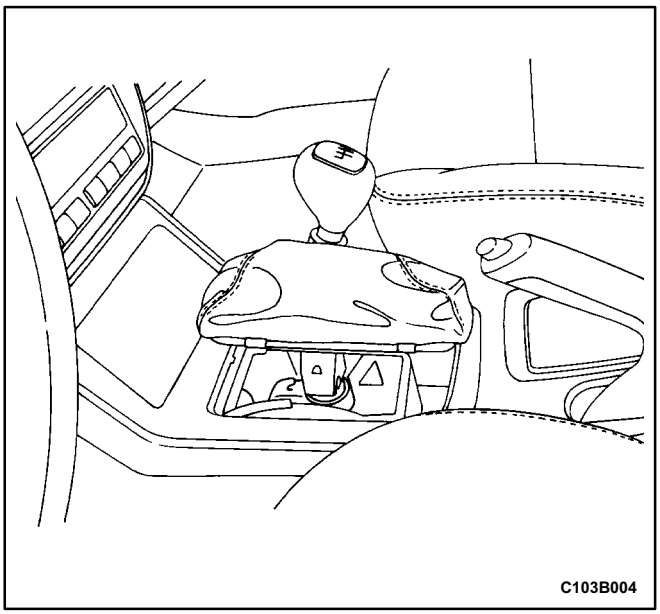

5. Position the shift lever into NEUTRAL.
6. Disconnect the gearshift boot from the front portion of the floor console and lift upward to expose the shift control lever mechanism.

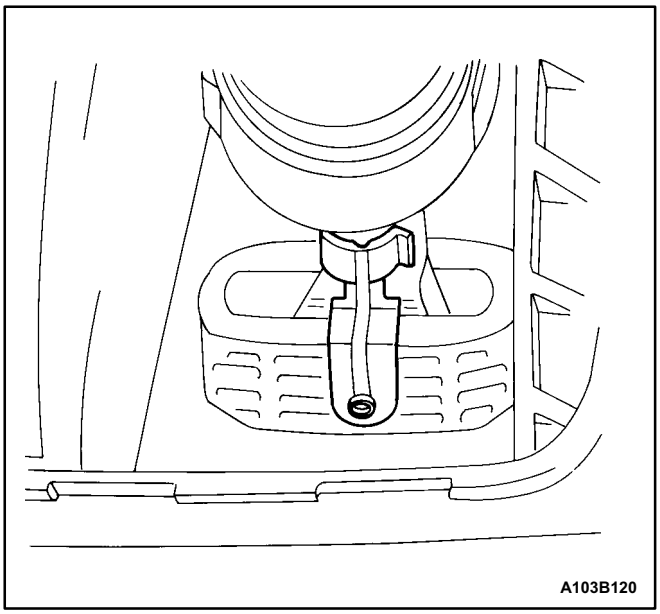

7. Rotate the gearshift lever stop clamp and remove it.
8. Remove the gearshift lever and the boot.
9. Remove the center console. Refer to *Section 9G, Interior Trim.*

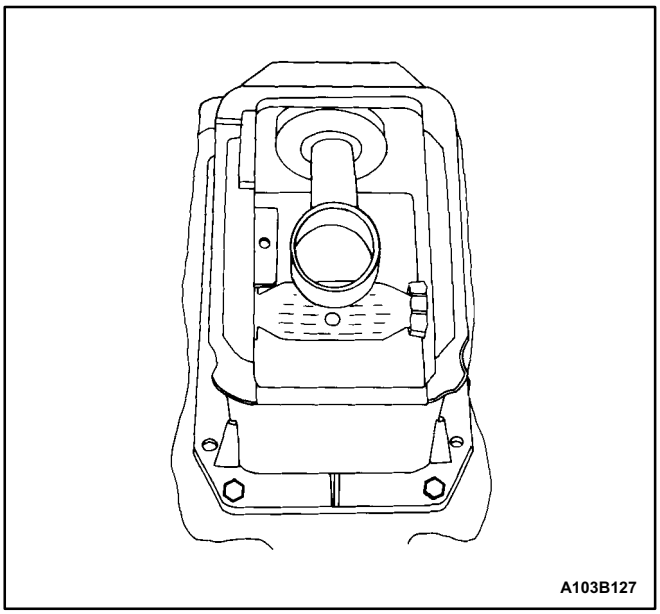

10. Remove the gearshift housing bolts.
11. Remove the gearshift tube with the gearshift housing from the vehicle.

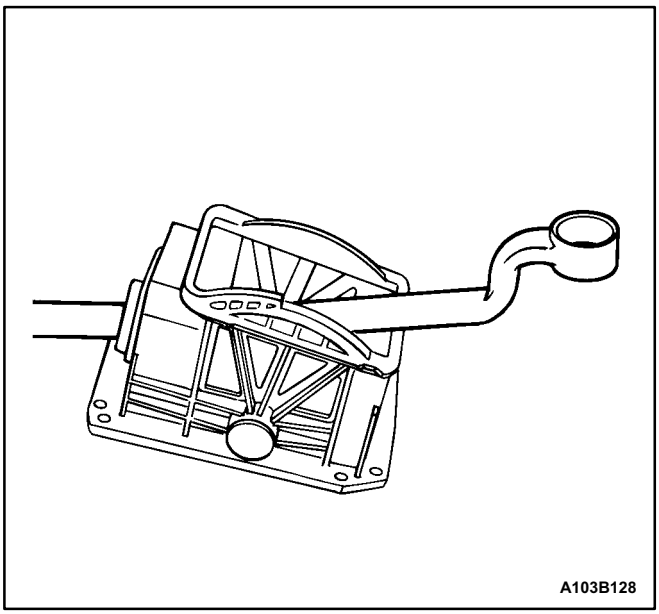

12. Remove the gearshift tube from the gearshift housing.

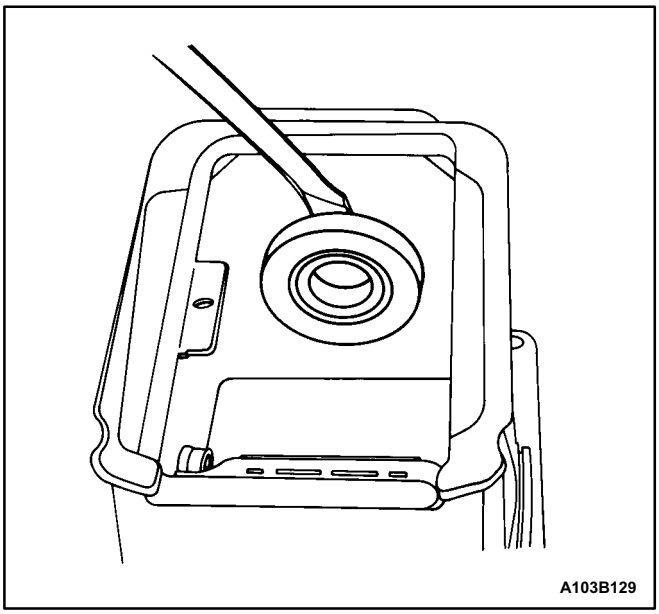

13. Remove the bushing and the gearshift tube bearing from the gearshift housing.

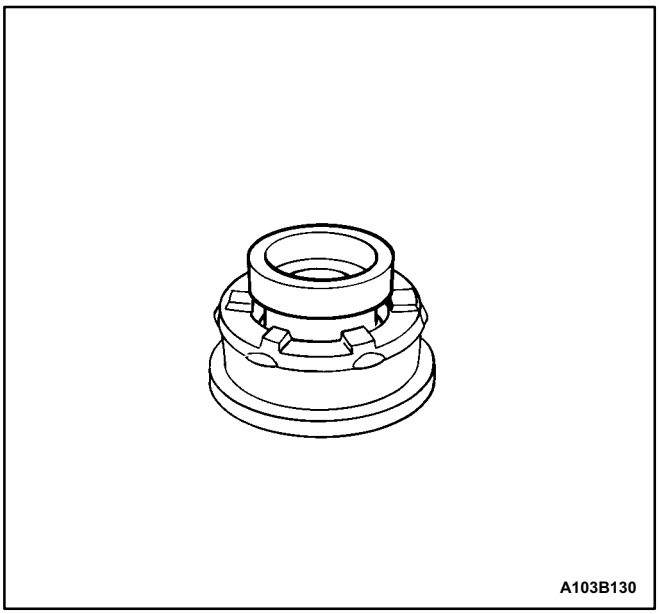

14. Remove the bushing from the gearshift tube bearing.

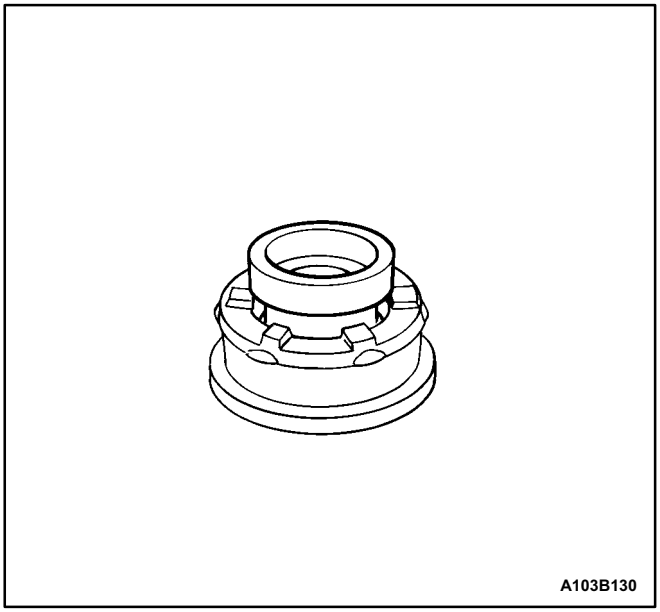

Installation Procedure

1. Install the bushing into the gearshift tube bearing.

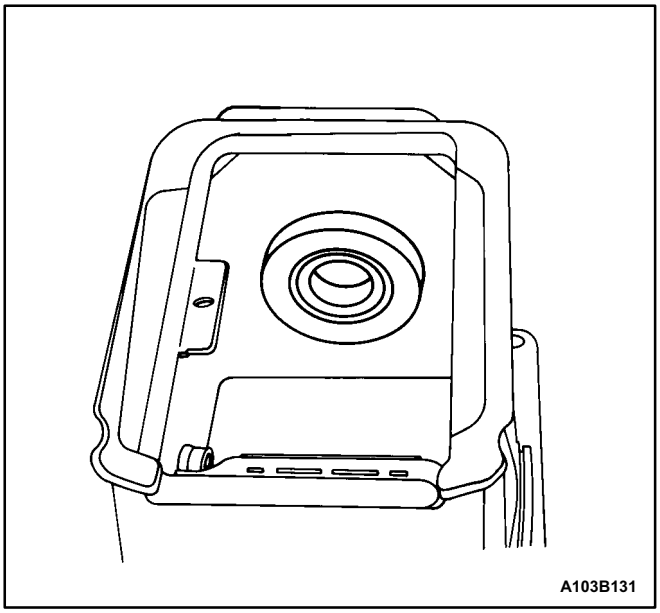

2. Fill the grooves of the bushing with silicone grease.
3. Press the bearing ring into the gearshift housing from the inside.

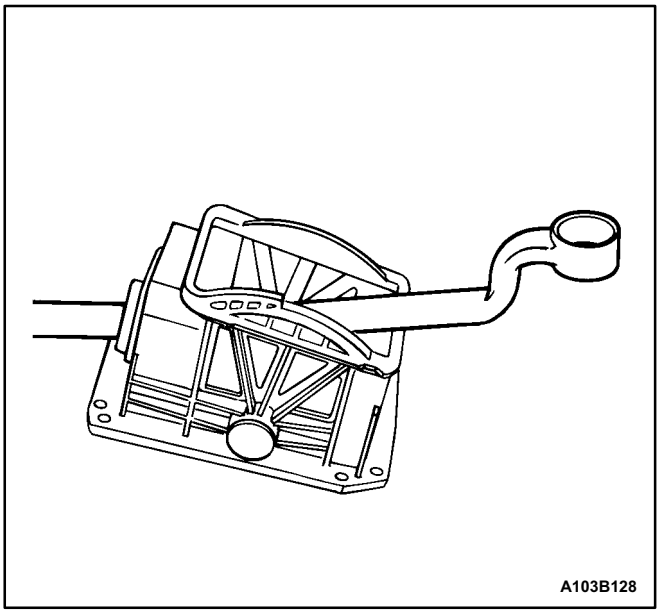

4. Install the gearshift tube through the bushing into the gearshift housing.

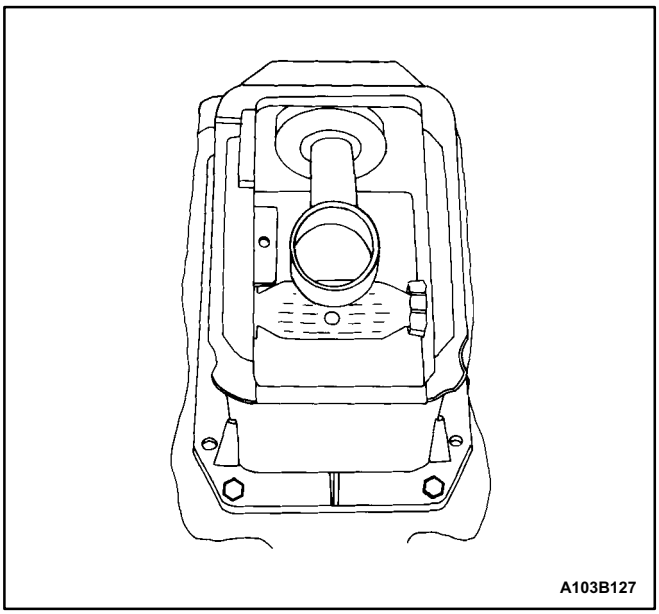

5. Install the gearshift housing and the gearshift tube into the vehicle.
6. Install the gearshift housing bolts.

Tighten

Tighten the gearshift housing bolts to 6 N•m (53 lb•in).

7. Install the center console. Refer to *Section 9G, Interior Trim.*

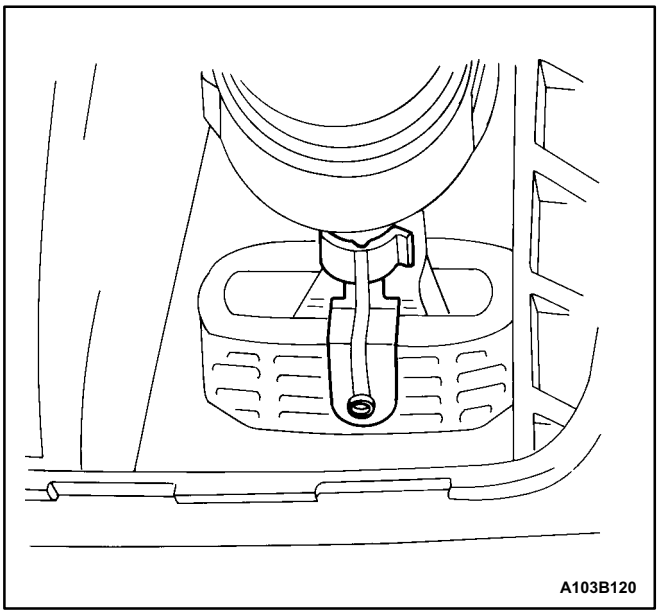

8. Install the shift lever into the shaft.
9. Install the gearshift lever stop clamp and rotate it into position.

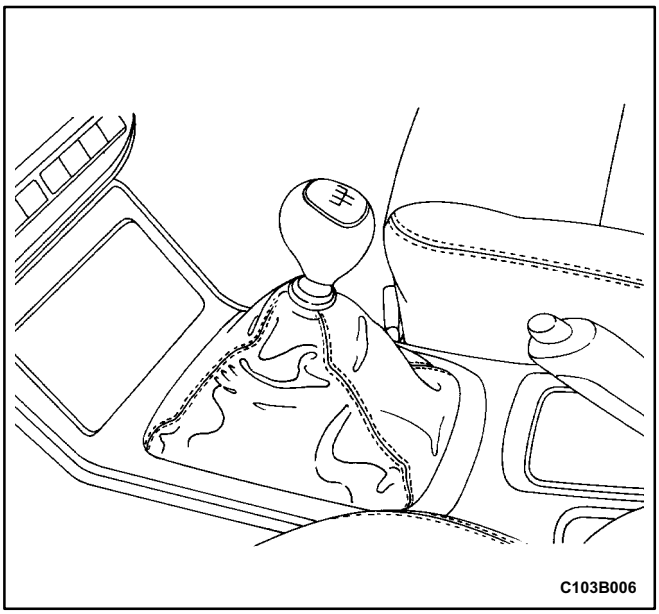

10. Install the gearshift boot.

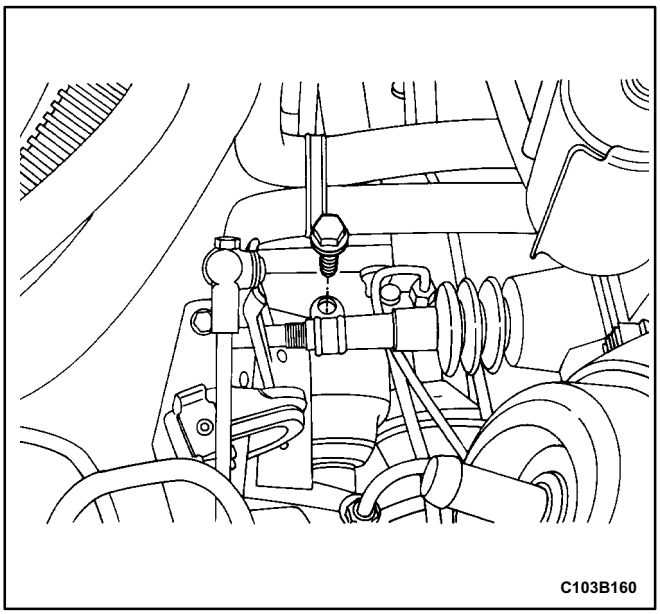

11. Install the rod clamp onto the gearshift tube.
12. Connect the linkage bolt to the gearshift tube.
13. Install the rod clamp bolt.
14. Adjust the shift linkage. Refer to „Shift Linkage Adjustment" in this section.
15. Tighten the rod clamp bolt.

Tighten

Tighten the rod clamp bolt to 14 N•m (124 lb•in).

16. Connect the negative battery cable.

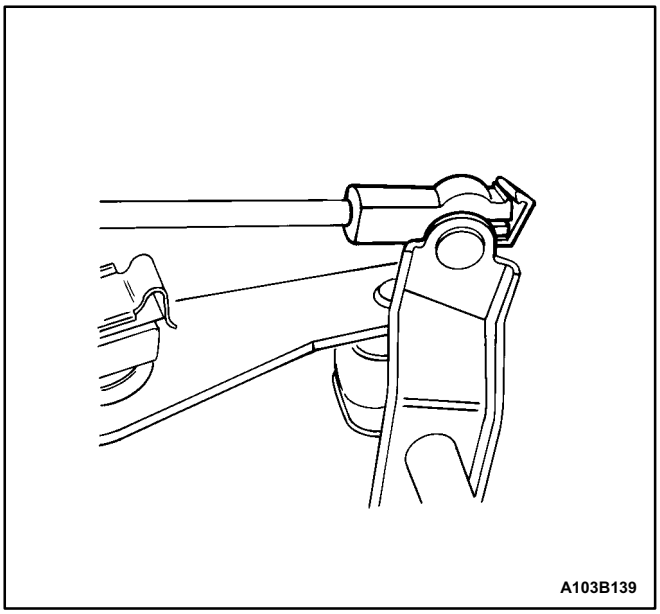

CONTROL SHIFT ROD

Removal Procedure

1. Disconnect the negative battery cable.
2. Separate the plastic clip from the end of each ball socket.

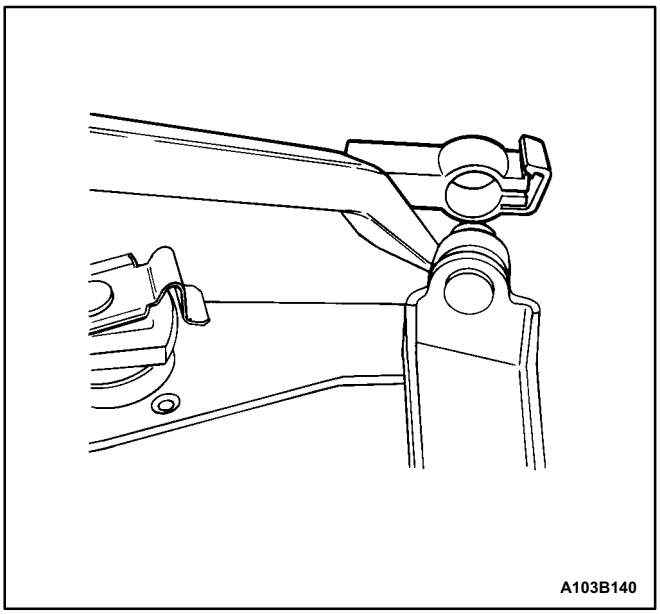

3. Separate the ball sockets from the ball studs on the linkage bolts using a pry bar.
4. Remove the control shift rod from the vehicle.

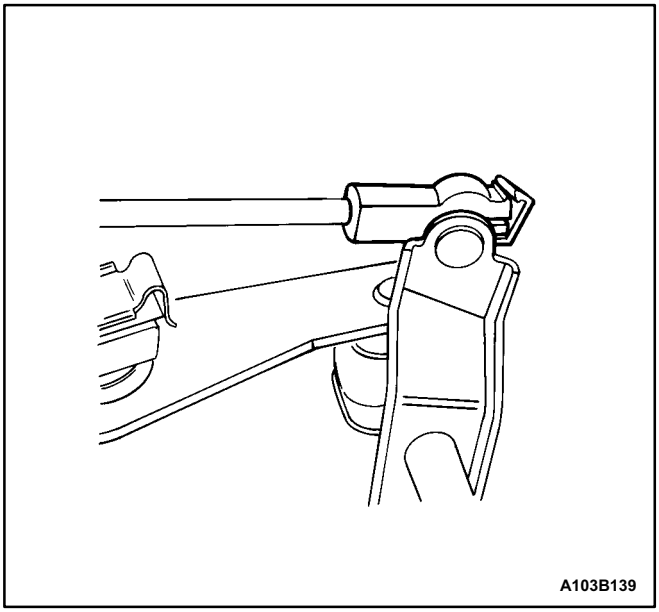

Installation Procedure

1. Install the control shift rod into the vehicle.
2. Press the ball sockets onto the ball studs on the linkage bolts.

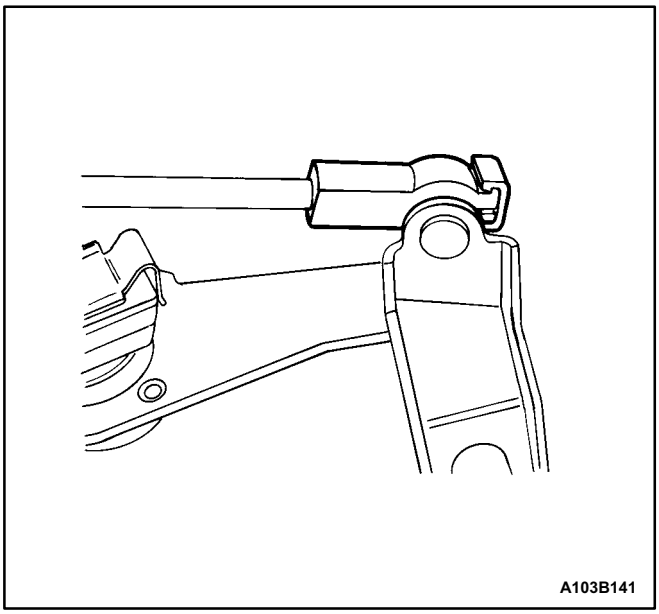

3. Connect the plastic clip on the end of each ball socket.
4. Connect the negative battery cable.

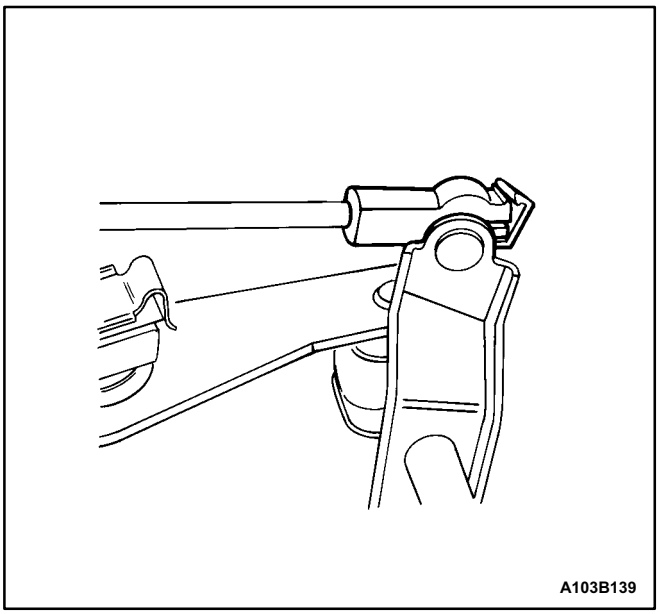

LINKAGE LEVER AND/OR BUSHINGS

Removal Procedure

1. Disconnect the negative battery cable.
2. Separate the plastic clip from the end of each ball socket.

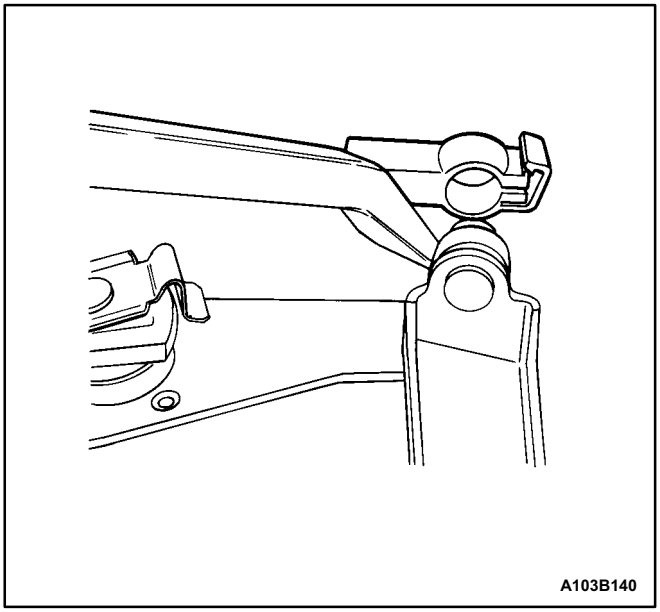

3. Separate the ball sockets from the ball studs on the linkage bolts using a pry bar.
4. Remove the control shift rod.

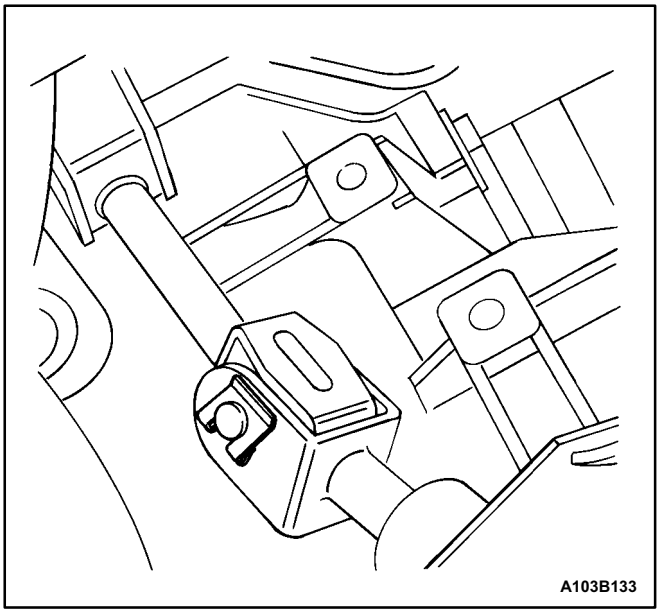

5. Remove the clip and the bolt from the universal joint.

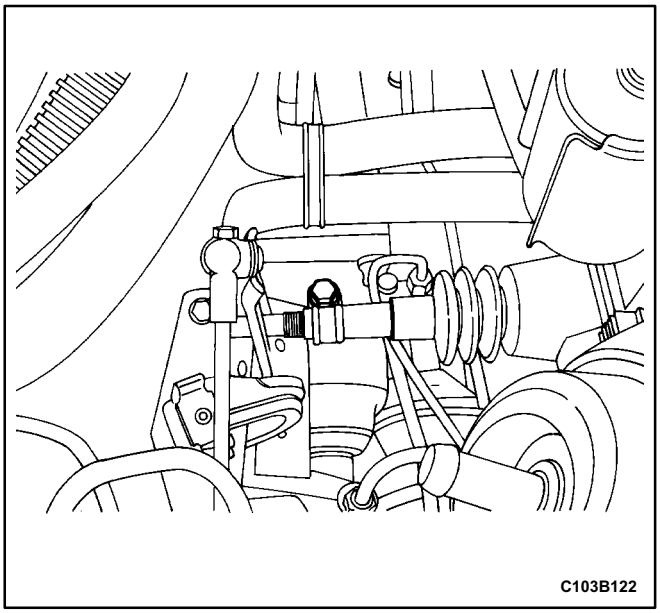

6. Loosen the rod clamp bolt.
7. Separate the linkage bolt from the shift tube.

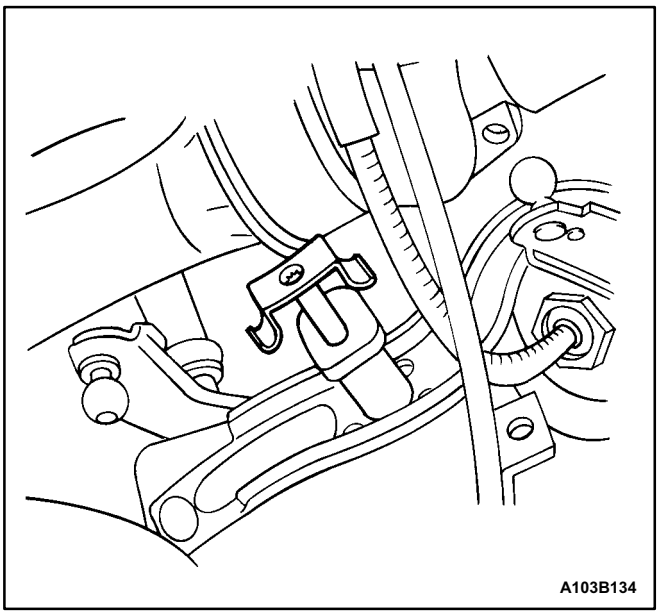

8. Loosen the spring clips and remove the pivot bolt.

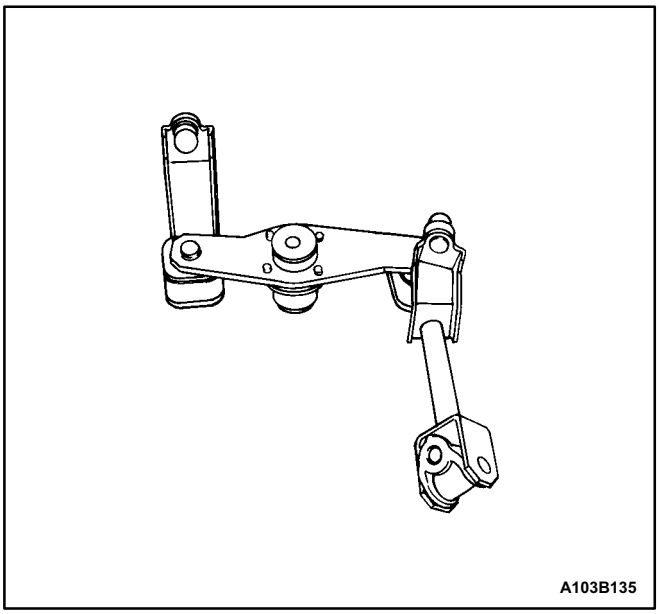

9. Remove the linkage lever assembly from the vehicle.

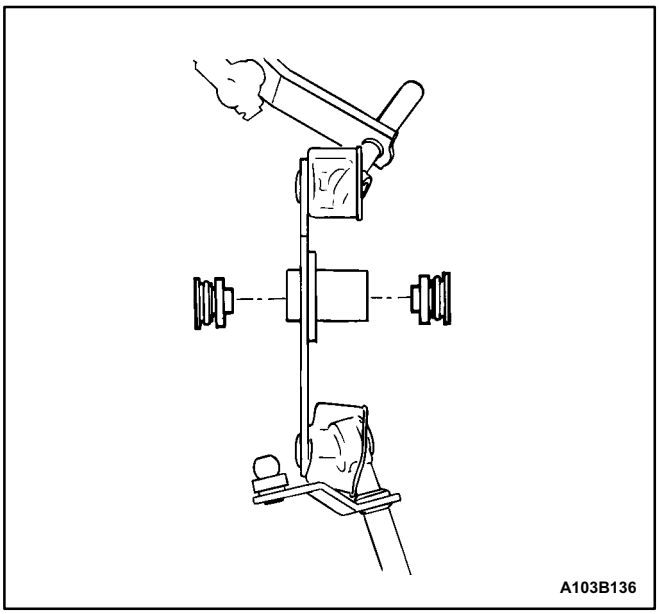

10. Remove both linkage lever bushings from the linkage lever assembly.

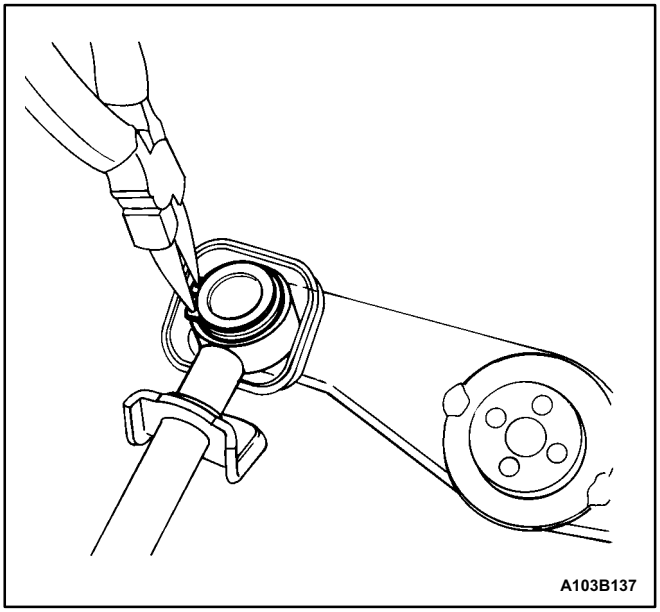

11. Remove the snap rings that retain the linkage bolts to the linkage lever assembly.

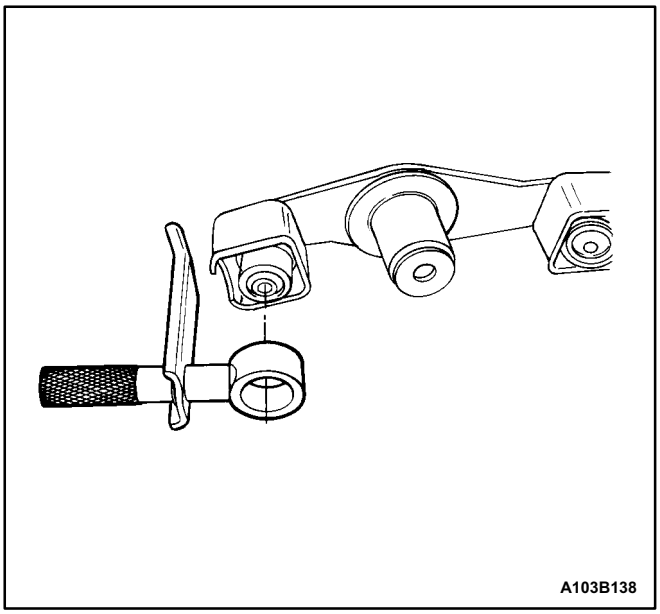

12. Disconnect the linkage bolts from the linkage lever.

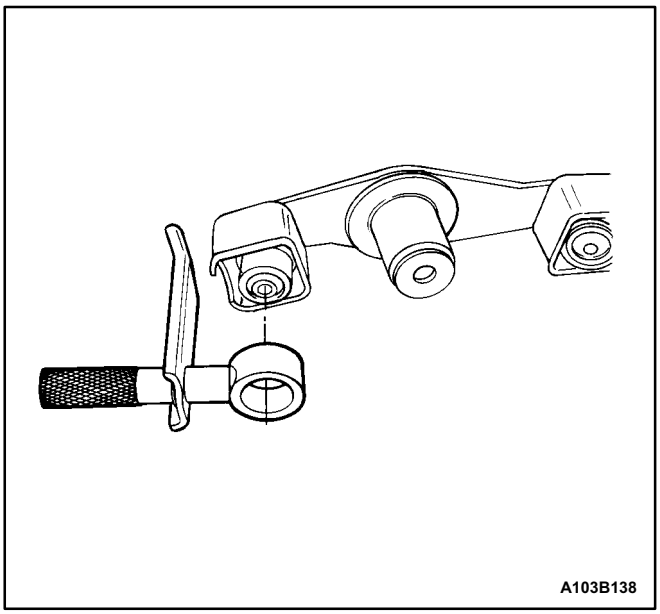

Installation Procedure

1. Connect the linkage bolts to the linkage lever.

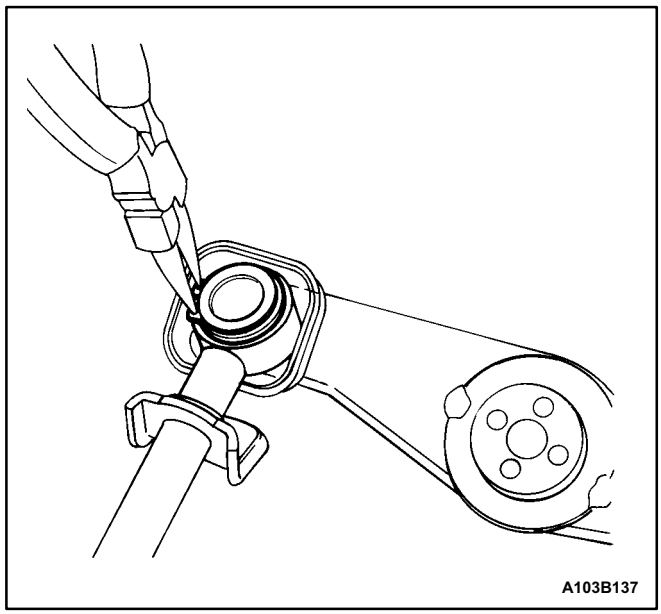

2. Install the snap rings to retain the linkage bolts to the linkage lever assembly.

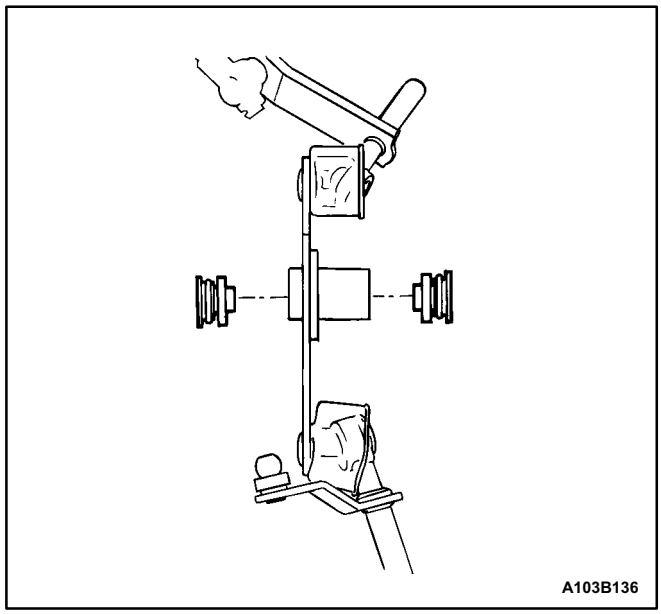

3. Coat the linkage lever bushings with silicone grease.
4. Install both of the linkage lever bushings into the linkage lever assembly.

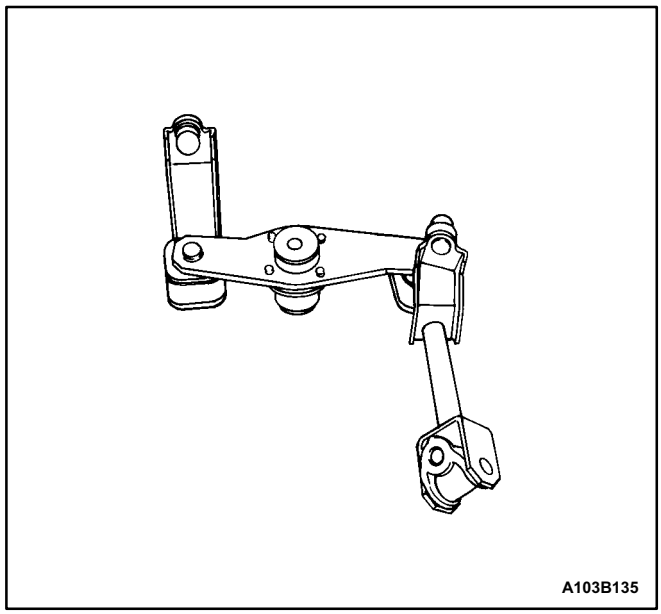

5. Install the linkage lever assembly into the vehicle.

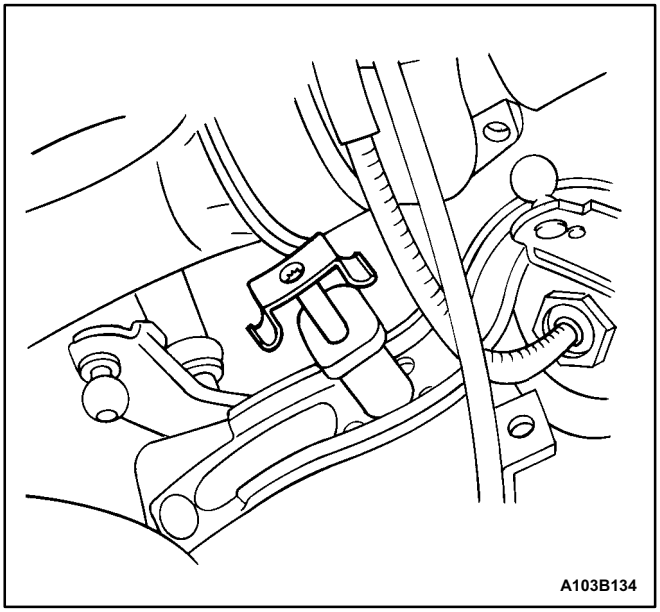

6. Install the pivot bolt. Make sure the spring clips are engaged.

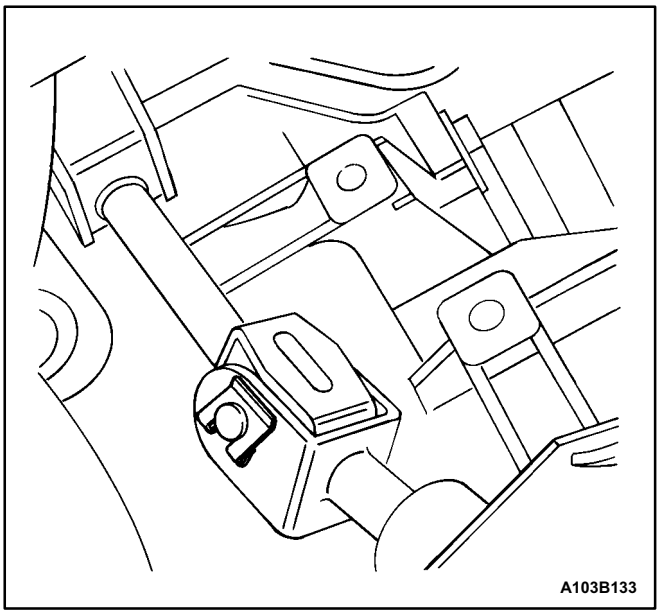

7. Coat the universal joint bolt with silicone grease.
8. Install the universal joint bolt and the clip onto the universal joint.

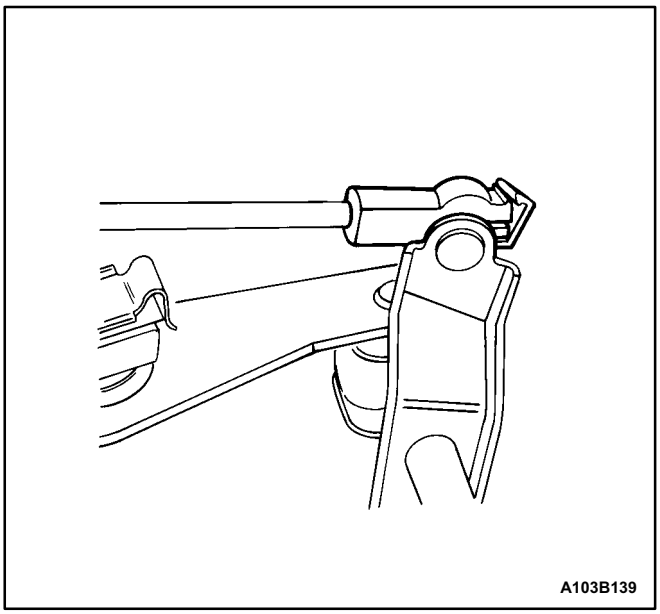

9. Install the control shift rod.
10. Press the ball sockets onto the ball studs on the linkage bolts.

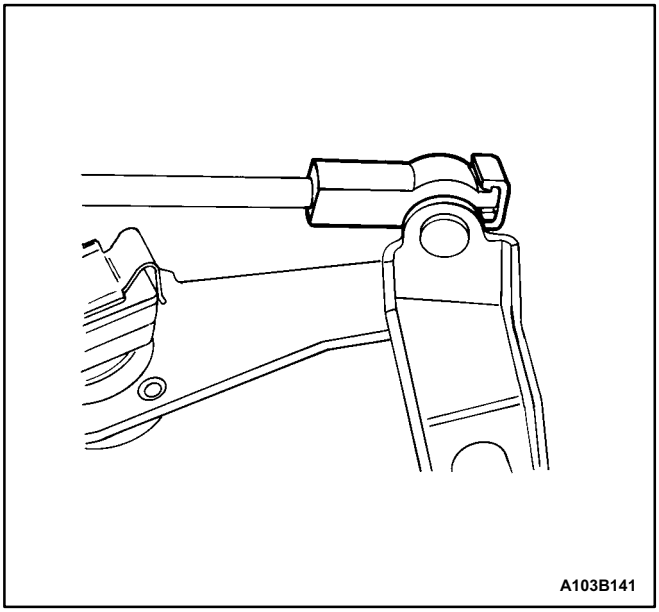

11. Connect the plastic clips on the end of each ball socket.

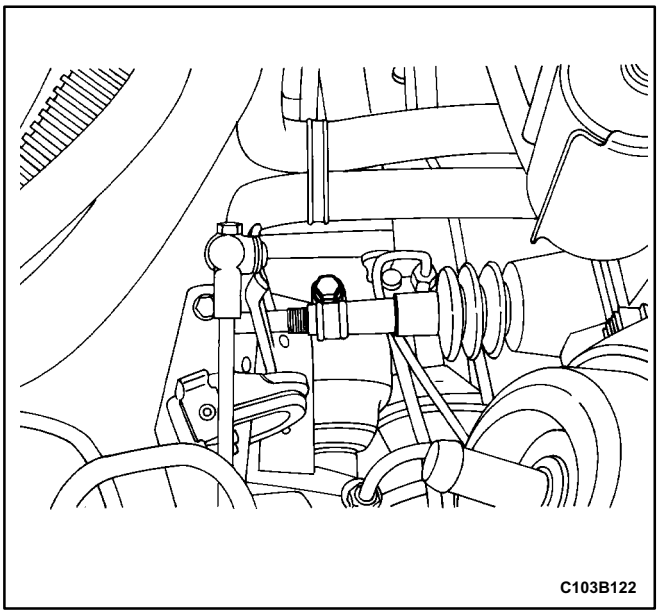

12. Connect the linkage bolt to the shift tube.
13. Adjust the shift linkage. Refer to „Shift Linkage Adjustment" in this section.
14. Tighten the rod clamp bolt.

Tighten

Tighten the rod clamp bolt to 14 N•m (124 lb•in).

15. Connect the negative battery cable.

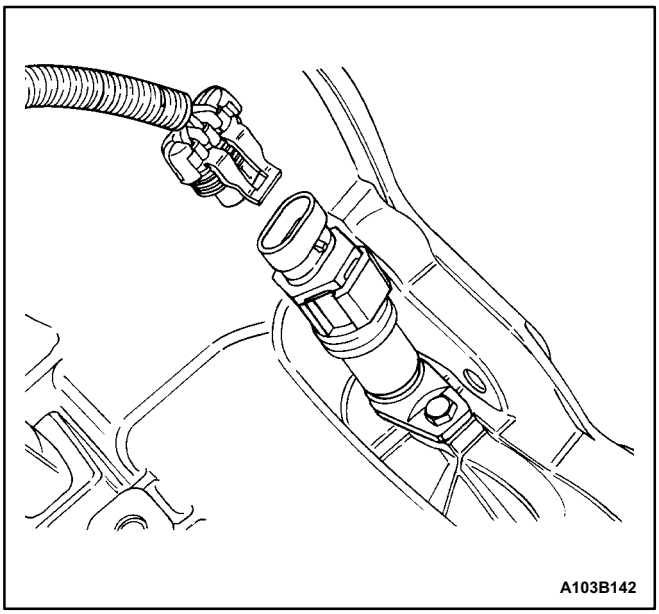

SPEEDOMETER DRIVEN GEAR

Removal Procedure

1. Disconnect the speedometer speed sensor electrical connector.

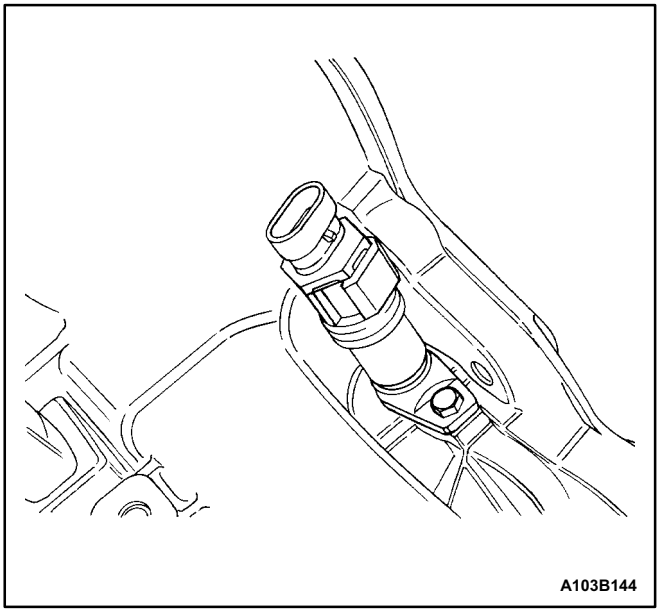

2. Remove the speedometer housing retaining bolt.

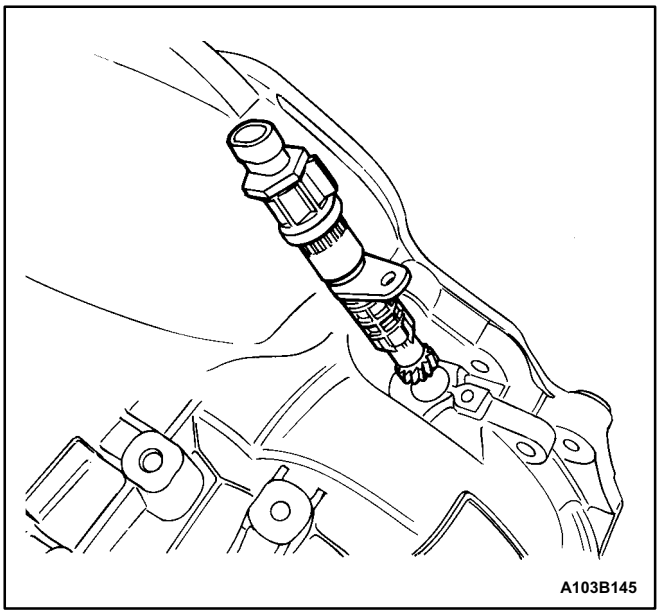

3. Remove the speedometer driven gear and the speedometer housing.

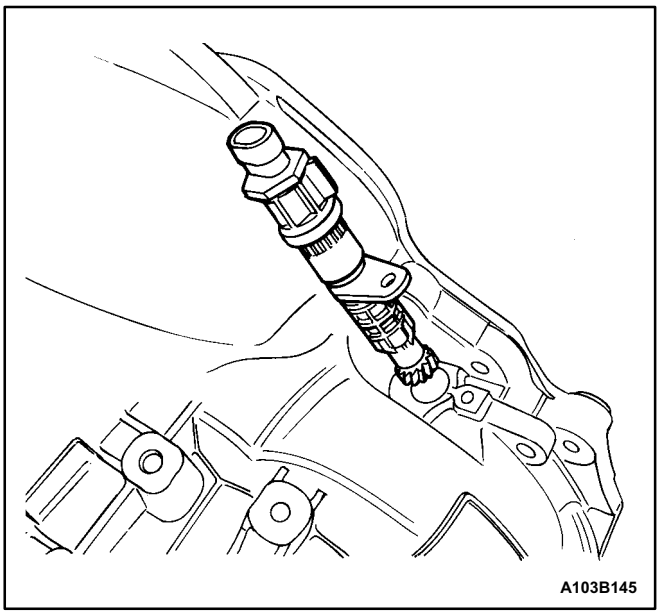

Installation Procedure

1. Coat the O-ring with petroleum jelly.
2. Install the speedometer driven gear and the speedometer housing.

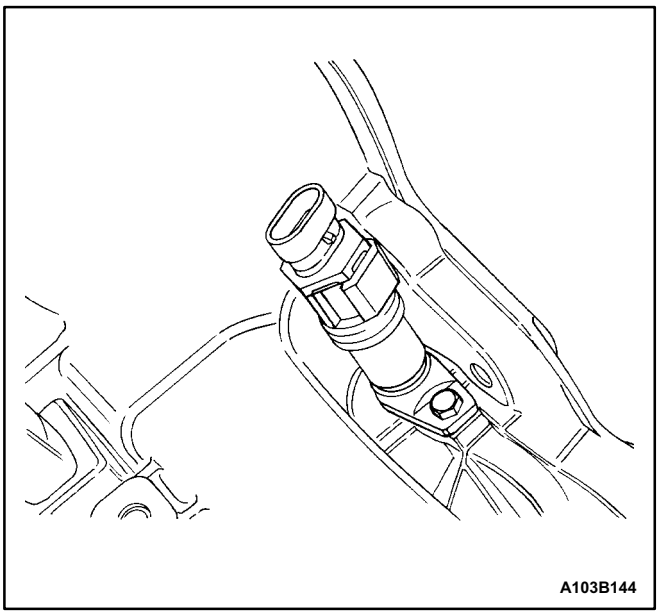

3. Install the speedometer housing retaining bolt.

Tighten

Tighten the speedometer housing retaining bolt to 4Ñ•m (35 lb•in).

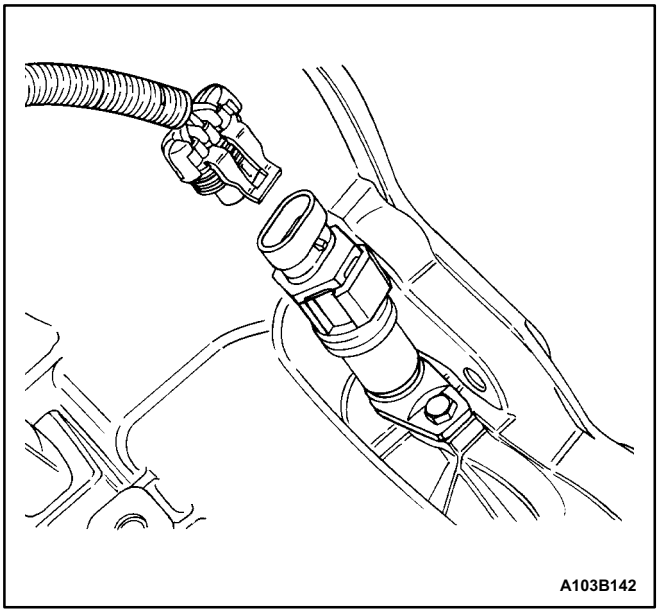

4. Connect the speedometer speed sensor electrical connector.

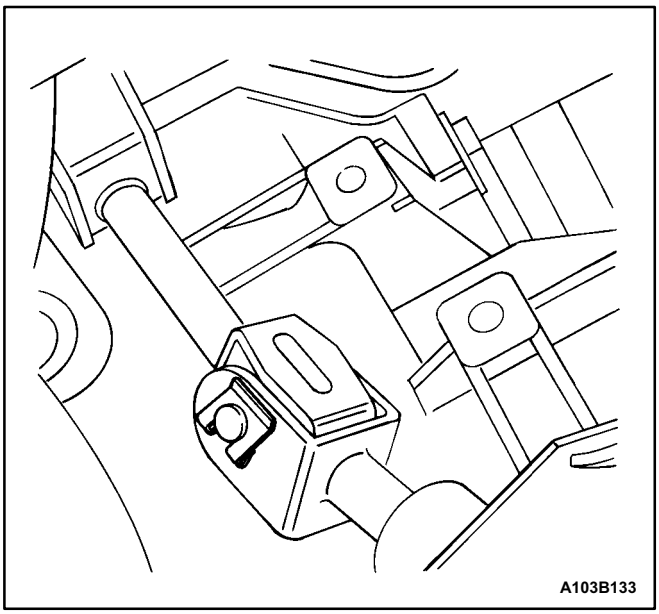

SHIFT LEVER COVER

Removal Procedure

1. Remove the clip and the bolt at the universal joint.

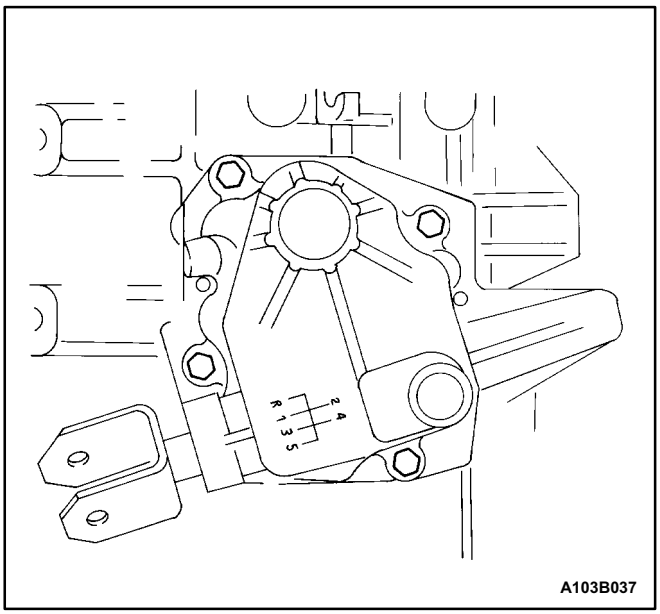

2. Remove the gearshift lever cover bolts.
3. Separate the gearshift lever cover and the gasket from the case.

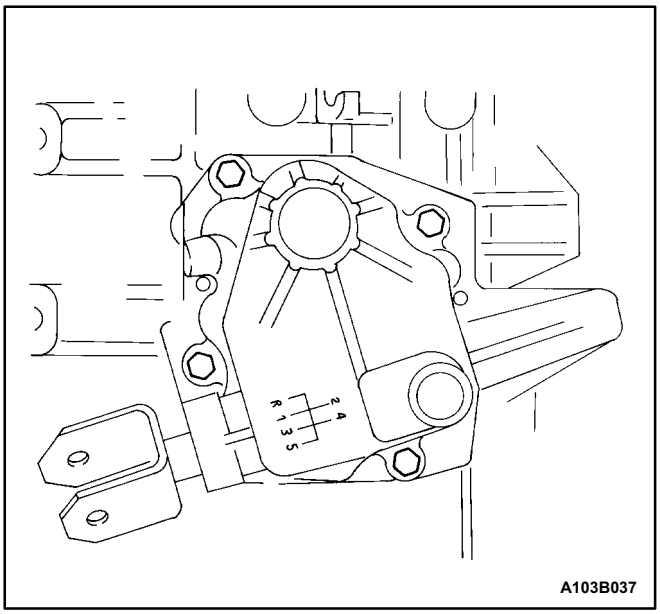

Installation Procedure

1. Position the gearshift lever cover and the gasket onto the case.
2. Install the gearshift lever cover bolts.

Tighten

Tighten the gearshift lever cover bolts to 22 N•m (16 lb•ft).

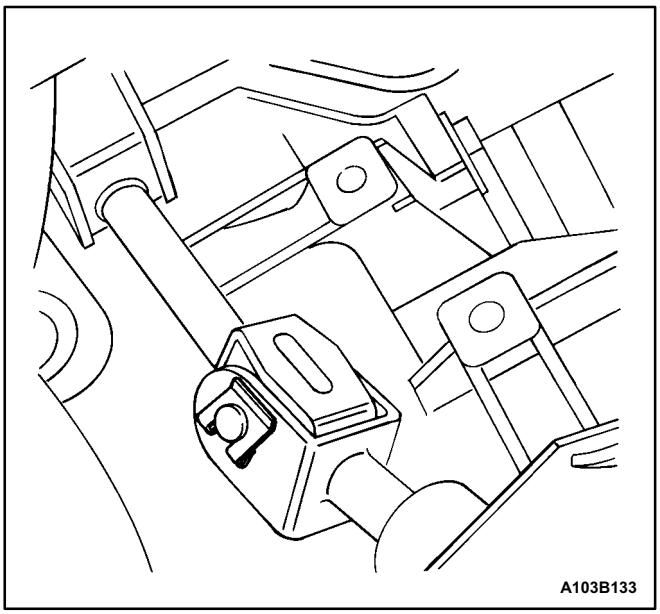

3. Install the bolt and the clip at the universal joint.
4. Check and adjust the fluid level. Refer to „Checking Fluid Level” in this section.

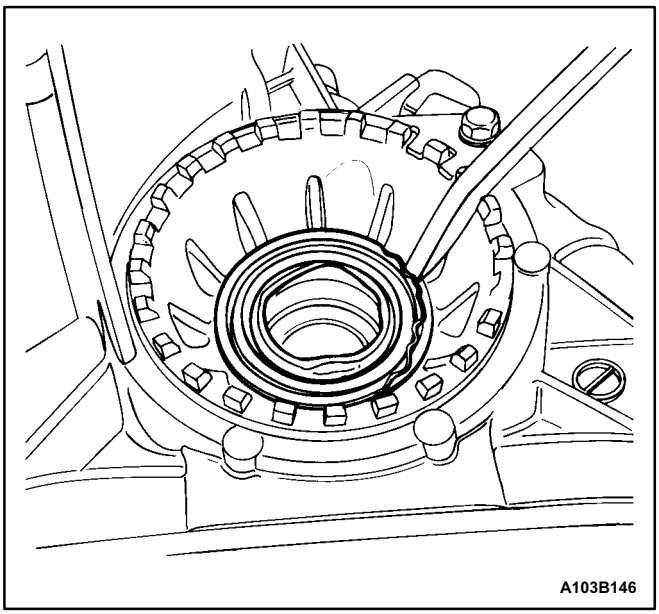

DRIVE AXLE SEAL

Tools Required

KM-519 Ring Installer

Removal Procedure

Notice: Do not damage the bearing adjusting ring with the pry bar.

1. Remove the drive axle from the transaxle. Refer to *Section 3B, Manual Transaxle Drive Axle*.
2. Remove the drive axle seal by lifting the outer lip of the seal with a pry bar.

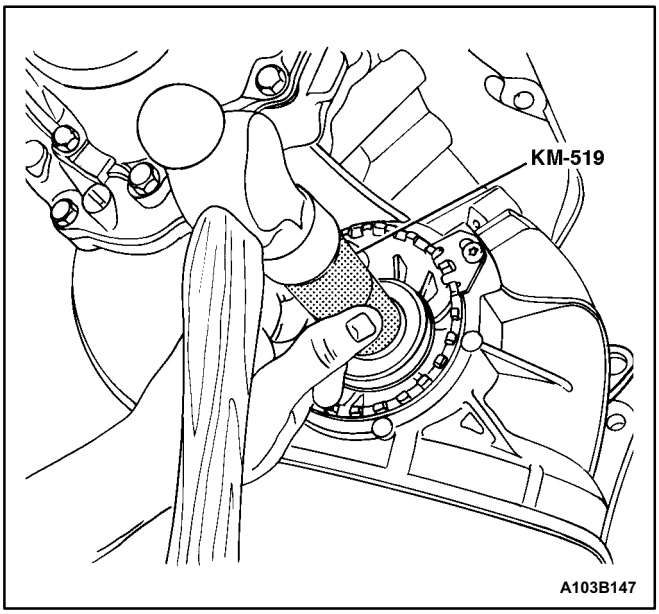

Installation Procedure

1. Install the new drive axle seal using the ring installer KM-519 and a hammer.
2. Coat the seal lip with the transaxle fluid.
3. Install the drive axle. Refer to *Section 3B, Manual Transaxle Drive Axle*.

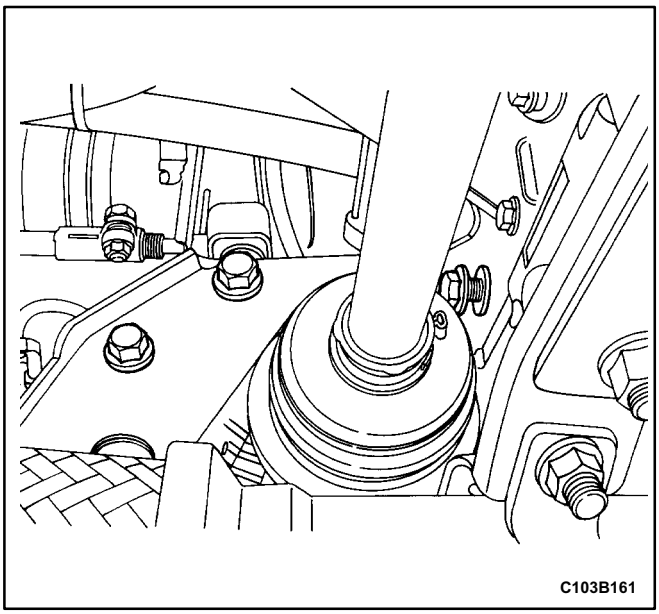

TRANSAXLE BRACKET

Removal Procedure

1. Remove the center member from the vehicle. Refer to *Section 9N, Frame and Underbody.*
2. Disconnect the linkage lever from the transaxle bracket. Refer to „Linkage Lever and/or Bushings” in this section.
3. Remove the bolts that connect the transaxle bracket to the transaxle and the bolt that connects the transaxle bracket to the engine.
4. Remove the transaxle bracket.

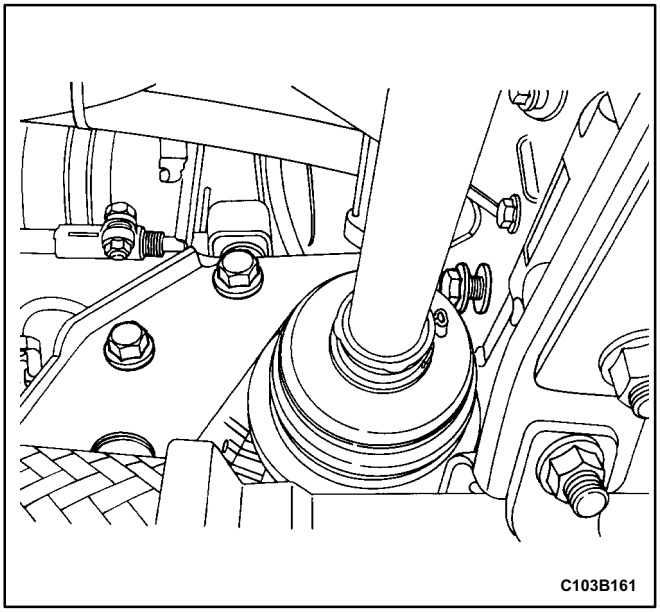

Installation Procedure

1. Install the transaxle bracket.
2. Install the bolts that connect the transaxle bracket to the transaxle and the bolt that connects the transaxle bracket to the engine.

   Tighten

   Tighten the transaxle bracket to transaxle bolts to 90 N•m (66 lb•ft).

   Tighten the transaxle bracket to engine bolt to 90 N•m (66 lb•ft).
3. Connect the linkage lever to the transaxle bracket. Refer to „Linkage Lever and/or Bushings" in this section.
4. Install the center member into the vehicle. Refer to *Section 9N, Frame and Underbody.*

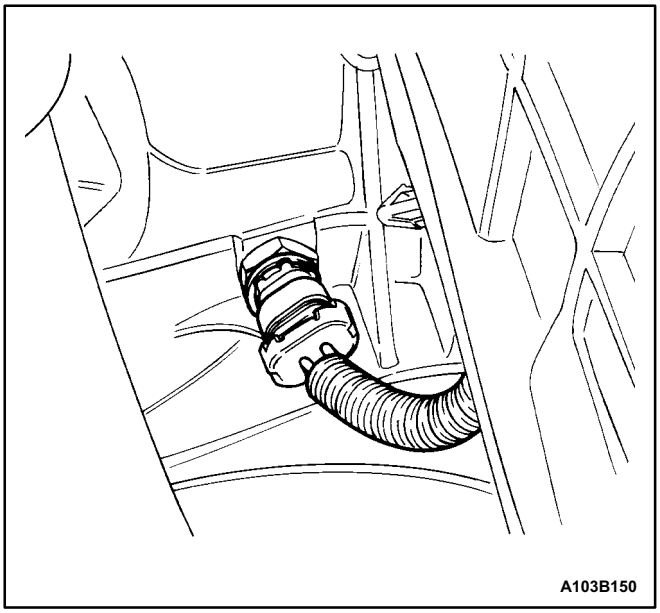

TRANSAXLE ASSEMBLY

Tools Required

J-28467-B Engine Support Fixture

Removal Procedure

1. Disconnect the backup lamp switch electrical connector.

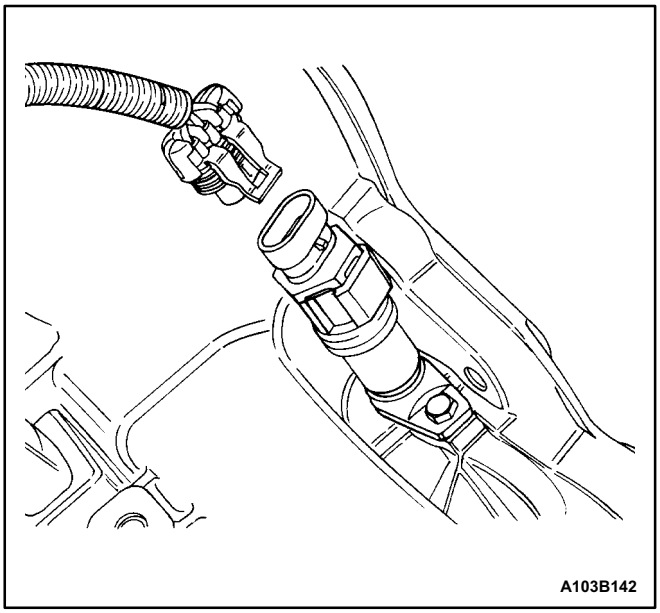

2. Disconnect the speedometer speed sensor electrical connector.

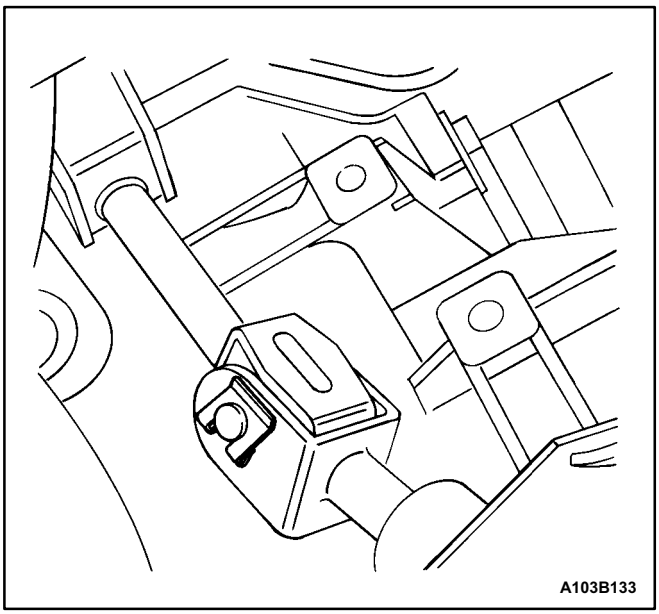

3. Remove the clip and the bolt from the universal joint.

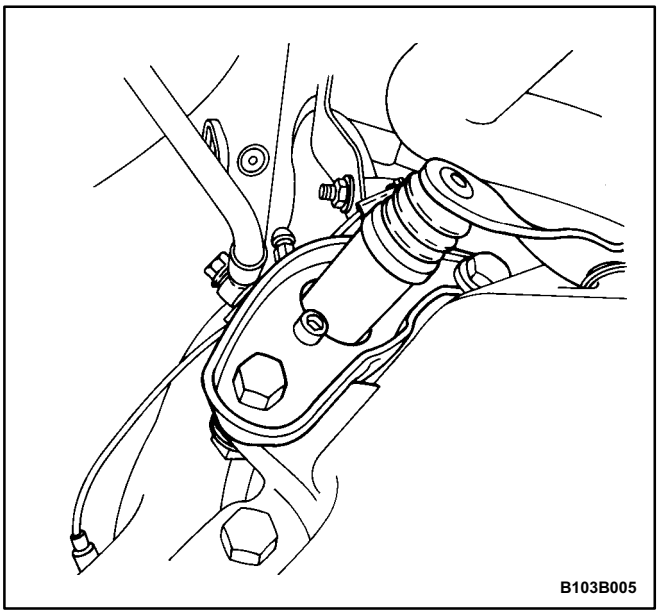

4. Remove the clutch release cylinder bracket bolts and the clutch release cylinder bracket.

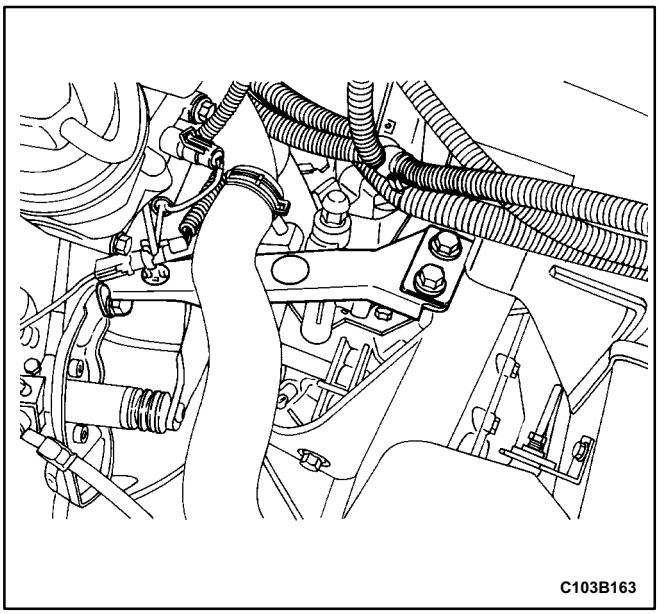

5. Remove the bolts and the transaxle upper brace.

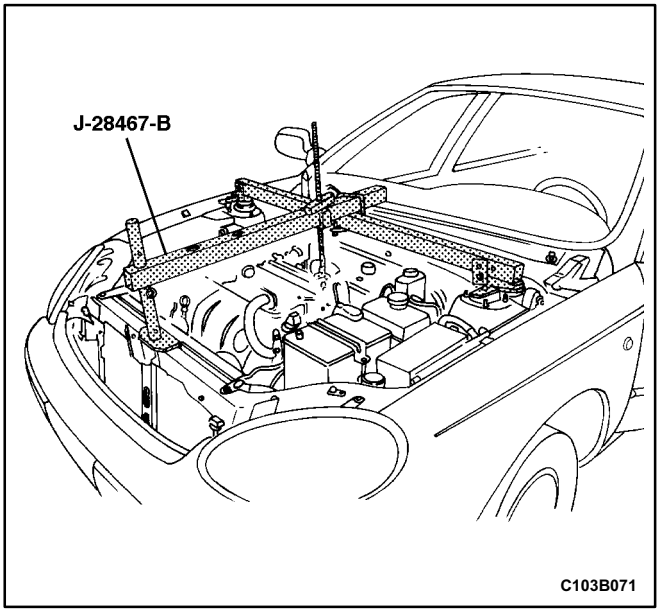

6. Install the engine support fixture J-28467-B.

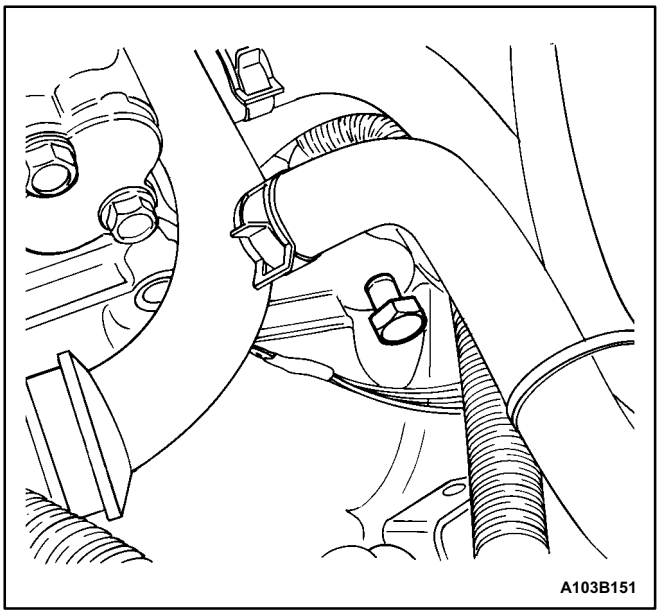

7. Remove the transaxle to engine upper bolts.
8. Raise and suitably support the vehicle.
9. Remove both of the drive axle shafts. Refer to *Section 3B, Manual Transaxle Drive Axle*.

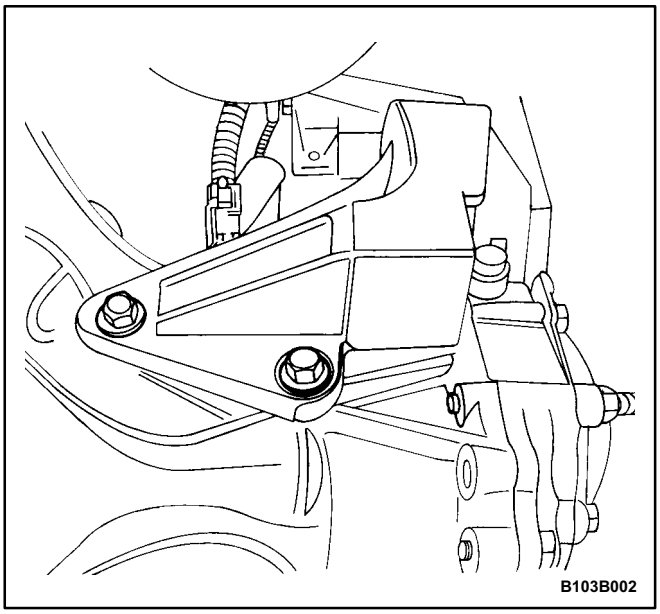

10. Support the transaxle with a transaxle support jack.
11. Remove the left front transaxle support bracket bolts and the left front transaxle support bracket.

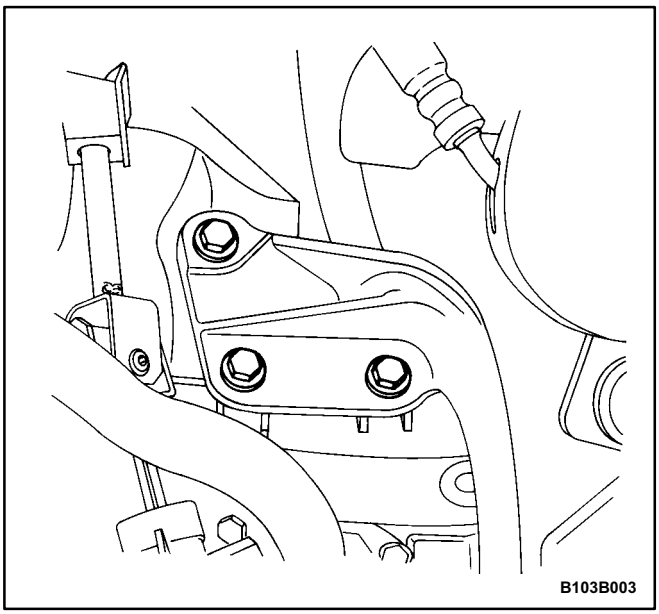

12. Remove the left rear transaxle support bracket bolts and the left rear transaxle support bracket.

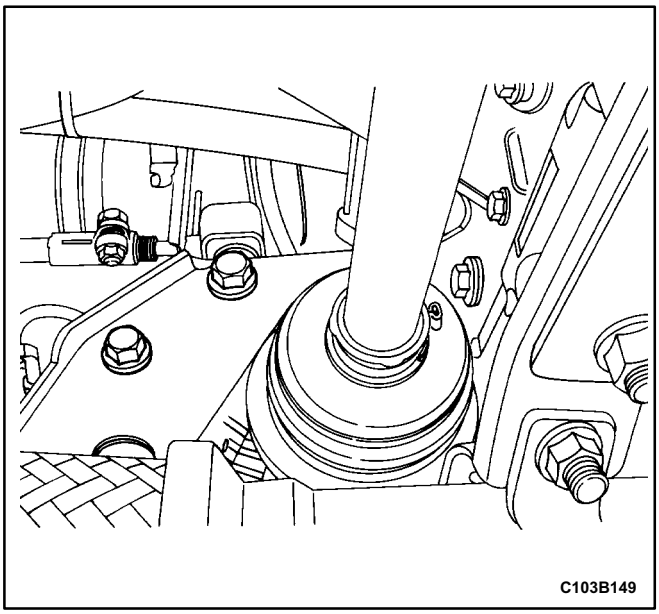

13. Remove the center rear transaxle support bracket bolts.

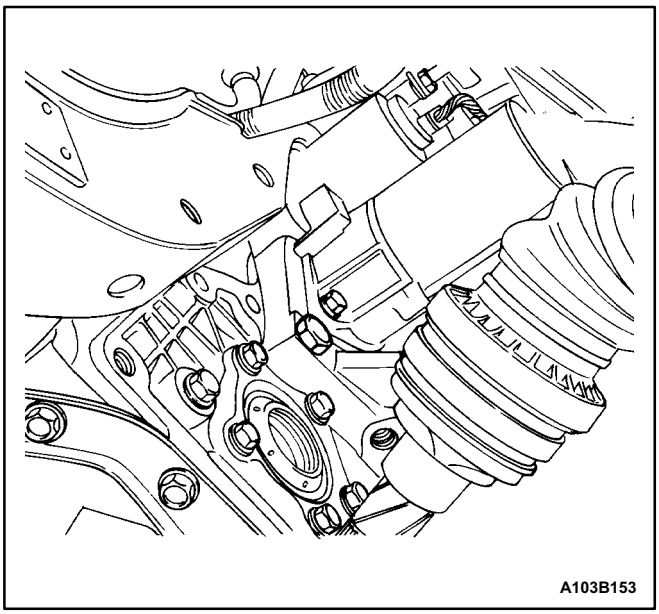

14. Remove the transaxle to engine lower bolts.

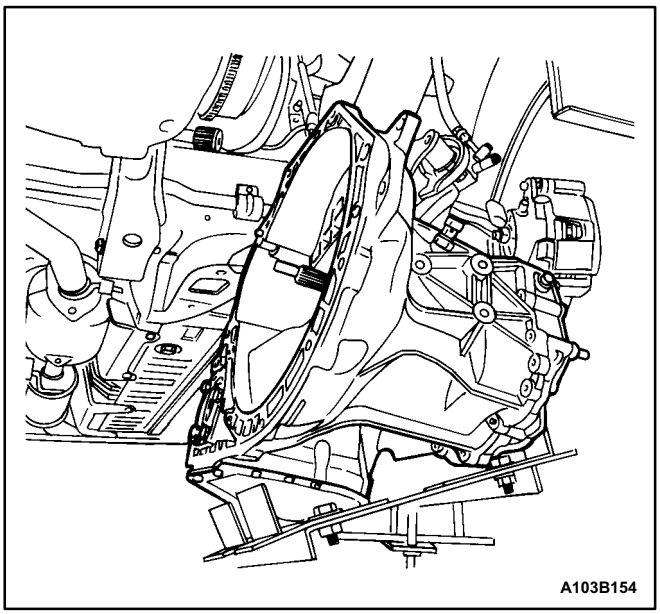

15. Disconnect the transaxle.

Notice: Rest the transaxle only in an upright position.

16. Slide the transaxle sideways away from the engine block.
17. Lower the transaxle.

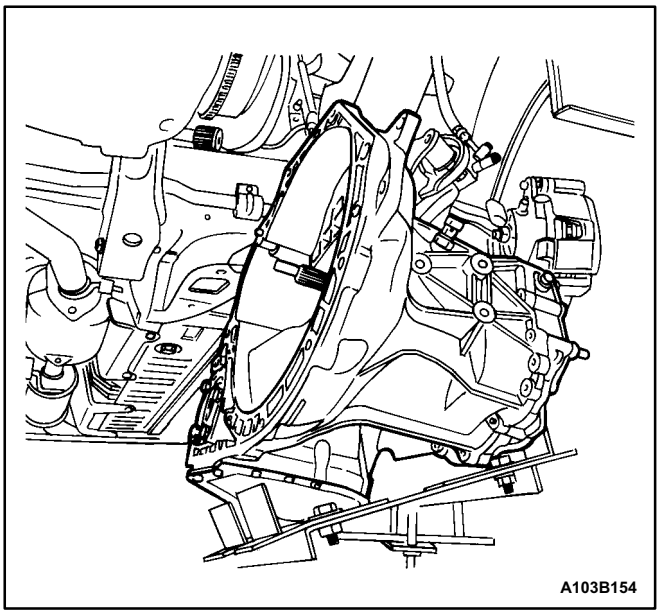

Installation Procedure

1. Support the transaxle with a transaxle support jack.
2. Install the transaxle by inserting the transaxle input shaft into the clutch disc and sliding the transaxle sideways into the engine block.

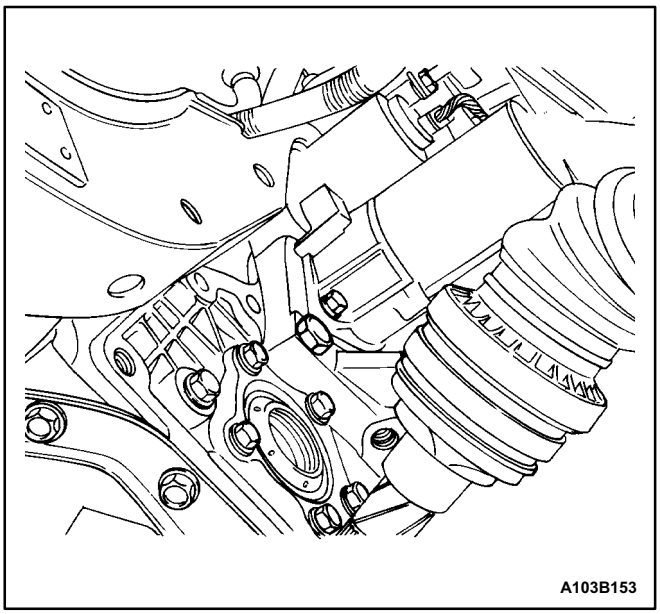

3. Install the transaxle to engine lower bolts.

Tighten

Tighten the transaxle to engine lower bolts to 75 N•m (55 lb•ft).

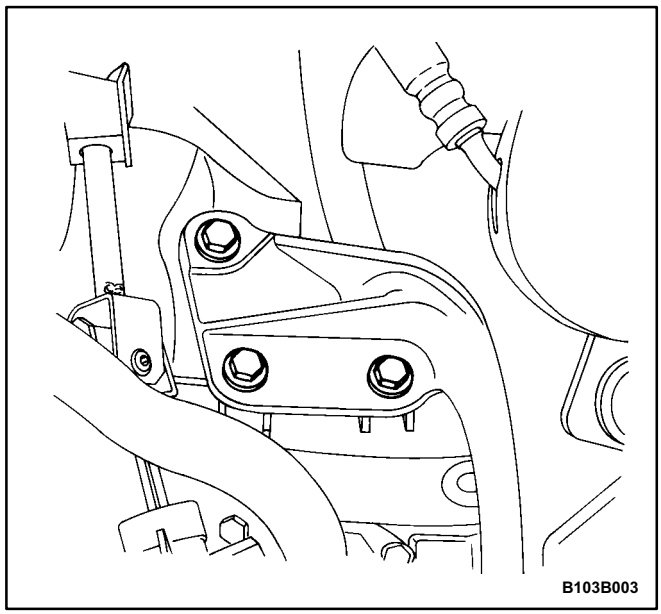

4. Install the left rear transaxle support bracket and the bolts.

Tighten

Tighten the left rear transaxle support bracket bolts to 60 N•m (44 lb•ft).

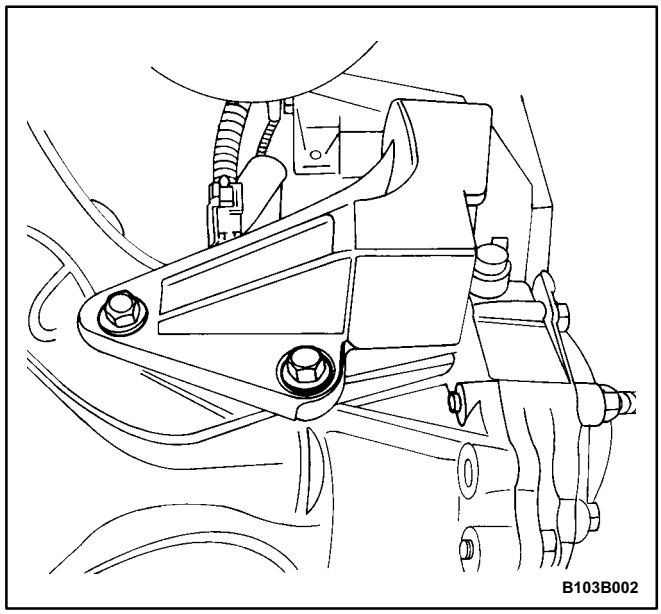

5. Install the left front transaxle support bracket and the bolts.

Tighten

Tighten the left front transaxle support bracket bolts to 60 N•m (44 lb•ft).

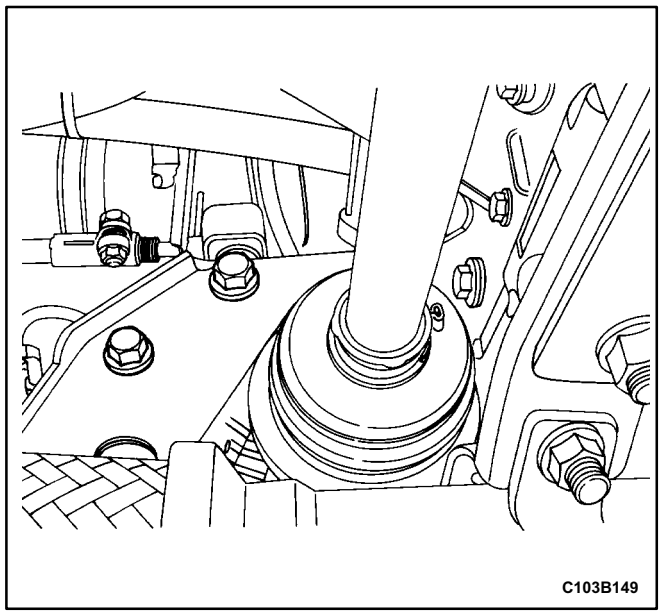

6. Install the center rear transaxle support bracket and the transaxle support bracket bolts.

Tighten

Tighten the center rear transaxle support bracket bolts to 90 N•m (66 lb•ft).

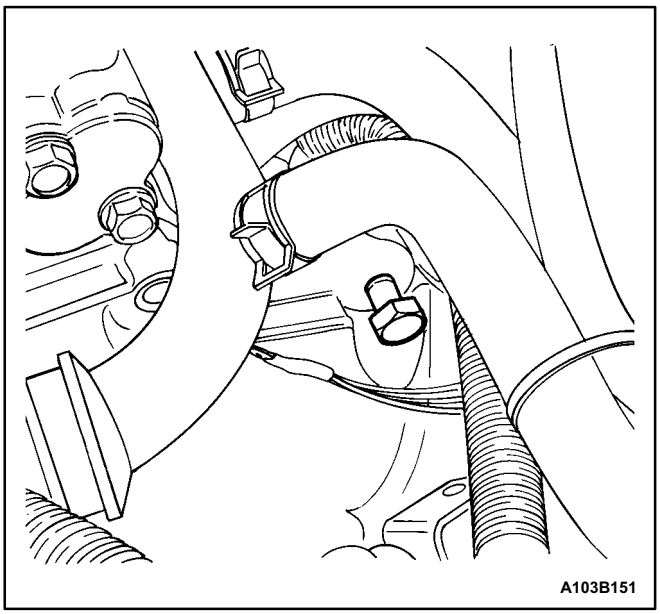

7. Install both of the drive axle shafts. Refer to *Section 3B, Manual Transaxle Drive Axle*.
8. Lower the vehicle.
9. Install the upper transaxle to engine bolts.

Tighten

Tighten the transaxle to engine upper bolts to 75 N•m (55 lb•ft).

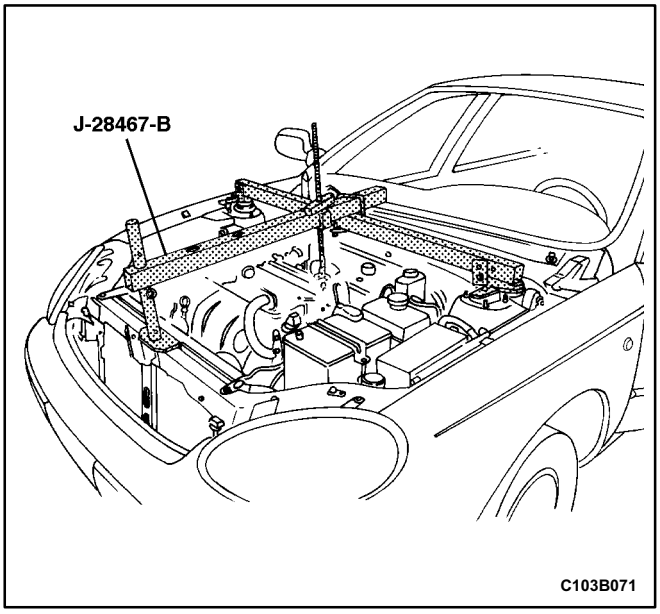

10. Remove the engine support fixture J28467B.

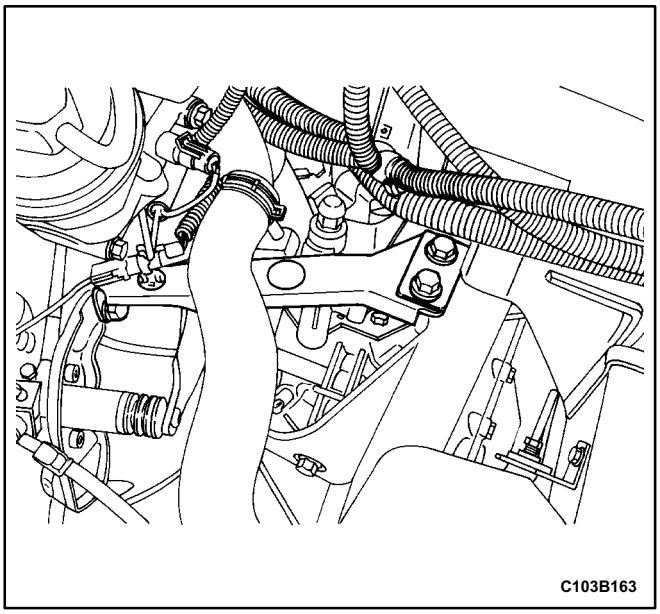

11. Install the transaxle upper brace with the bolts.

Tighten

Tighten the transaxle upper brace bolts to 75 N•m (55 lb•ft).

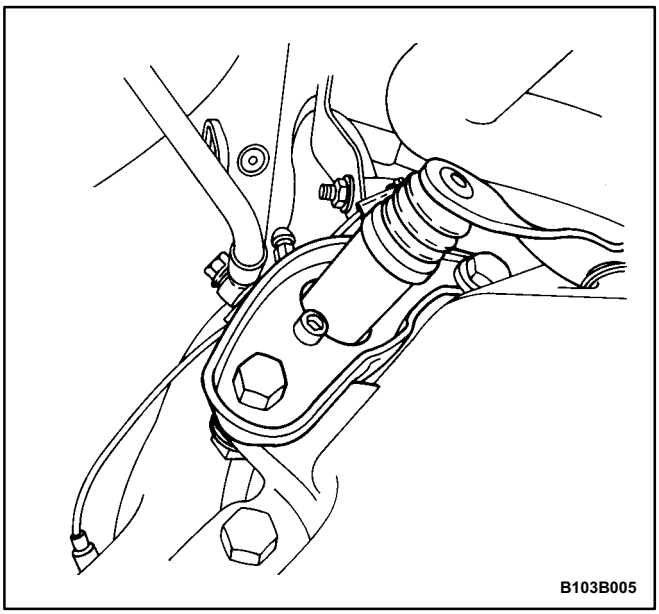

12. Install the clutch release cylinder bracket and the clutch release cylinder bracket bolts.

Tighten

Tighten the clutch release cylinder bracket bolts to 75 N•m (55 lb•ft).

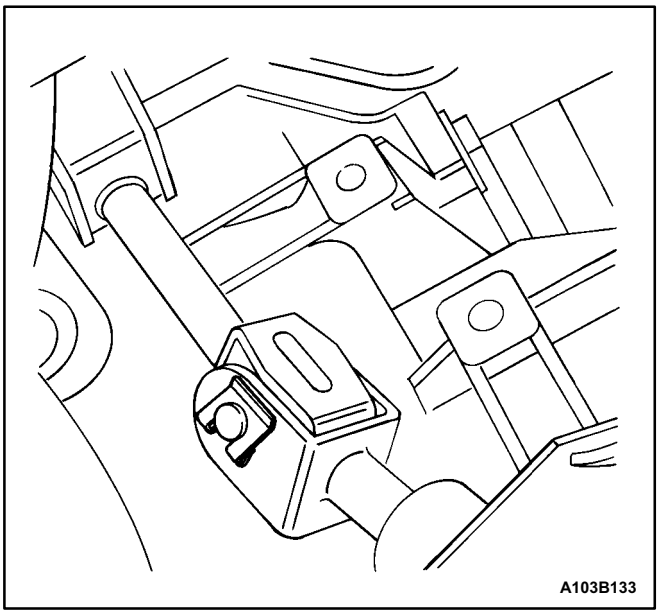

13. Install the bolt and the clip onto the universal joint.

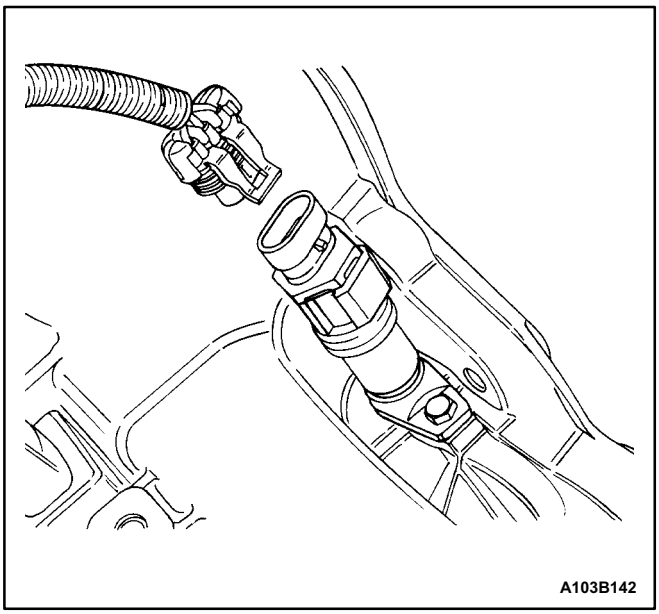

14. Connect the speedometer speed sensor electrical connector.

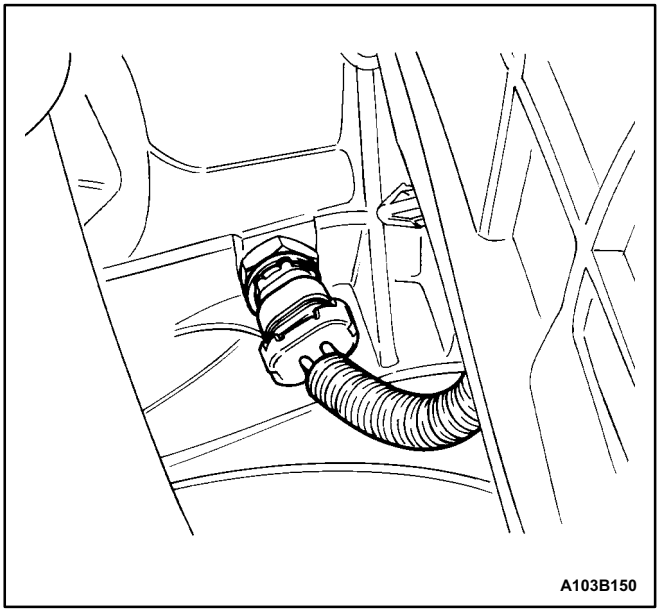

15. Connect the backup lamp switch electrical connector.
16. Inspect the fluid level. Refer to „Checking Fluid Level” in this section.

UNIT REPAIR

MAJOR COMPONENT DISASSEMBLY

Tools Required

J-6125-B Slide Hammer

J-22888-20-A Bearing Puller with J-22888-35 Puller Legs

KM-553-A Fifth Gear Puller

J-36633 Snap Ring Retainer

KM-113-2 Base

J-42469 Shift Rod Remover

KM-552 Fixture

Disassembly Procedure

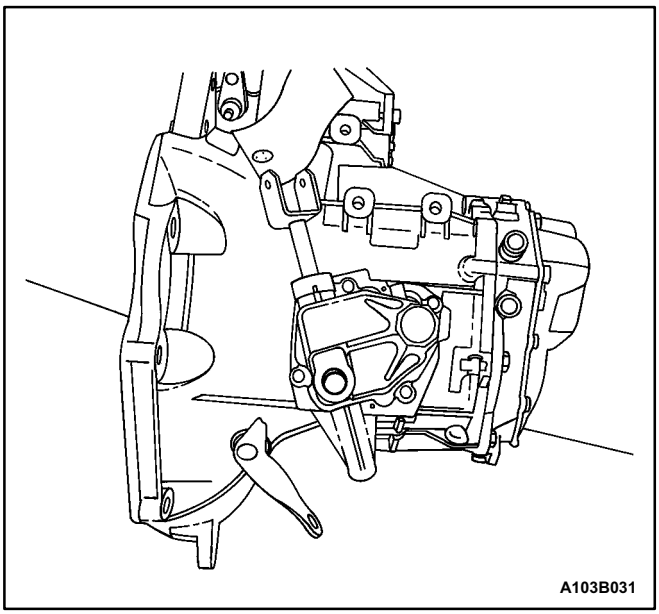

1. Remove the transaxle from the vehicle. Refer to „Transaxle Assembly" in this section.
2. Remove the filler plug at the cover.
3. Remove the bolts from the gearshift lever cover.

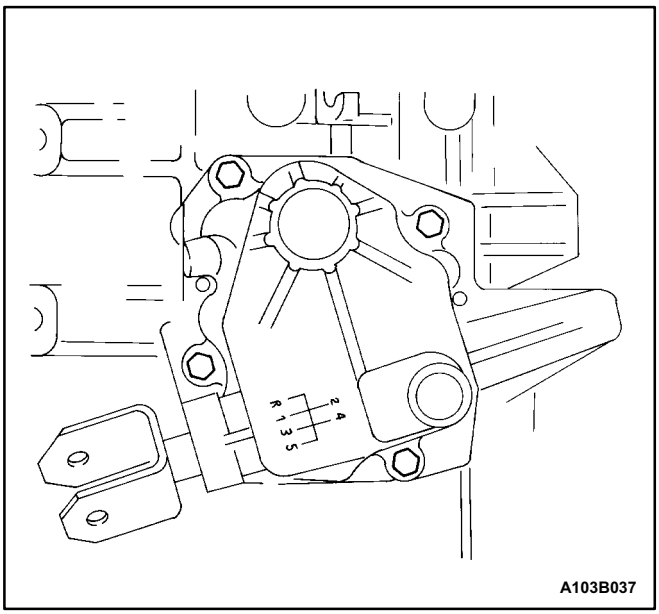

4. Remove the gearshift lever cover.

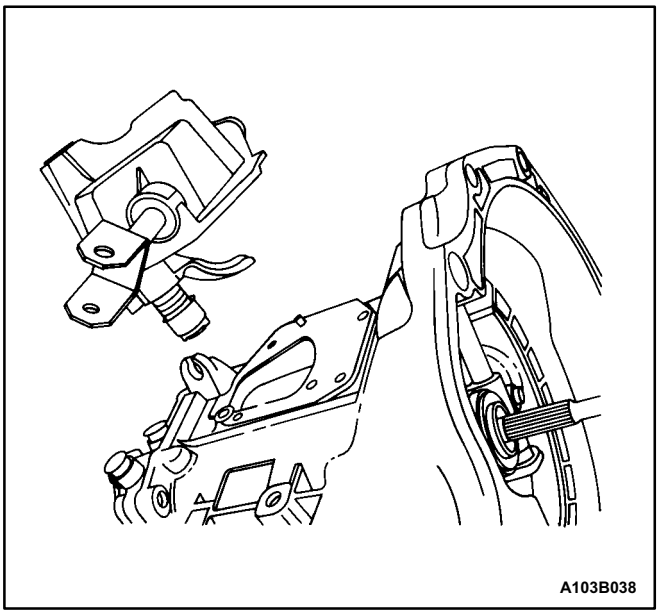

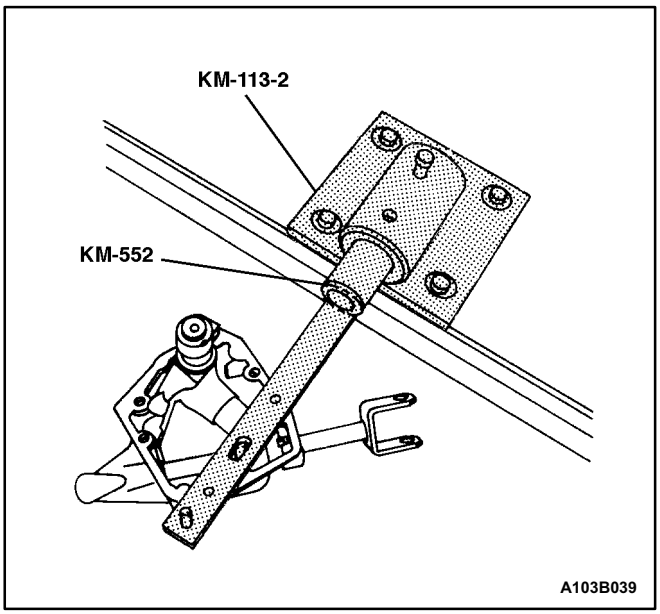

5. Bolt the gearshift lever cover to the fixture KM-552.
6. Position the fixture KM-552 into the base KM-113-2.

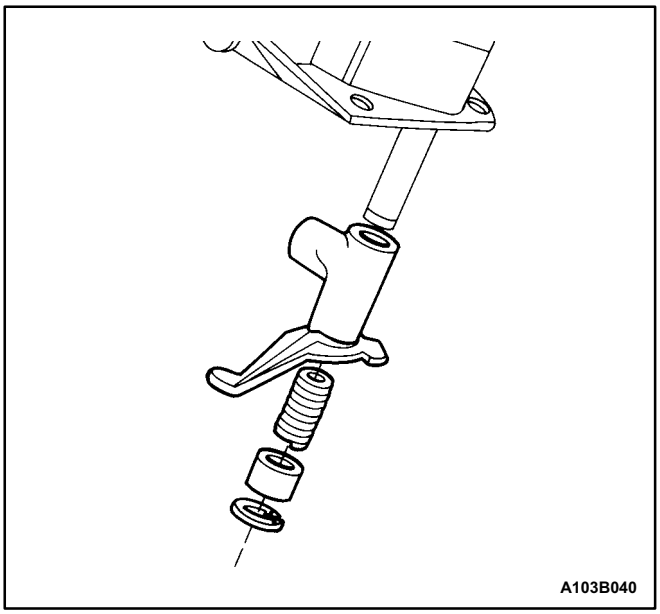

7. Remove the snap ring, the bushing, the spring, and the intermediate lever.

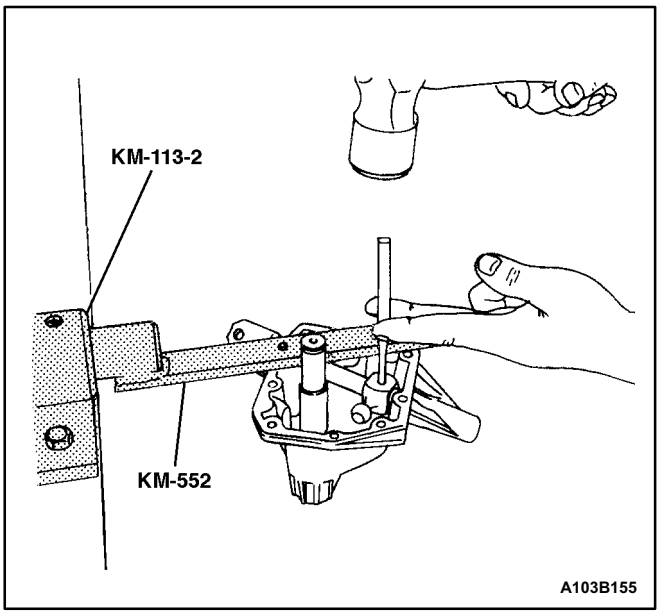

8. Remove the shift finger lever pin.

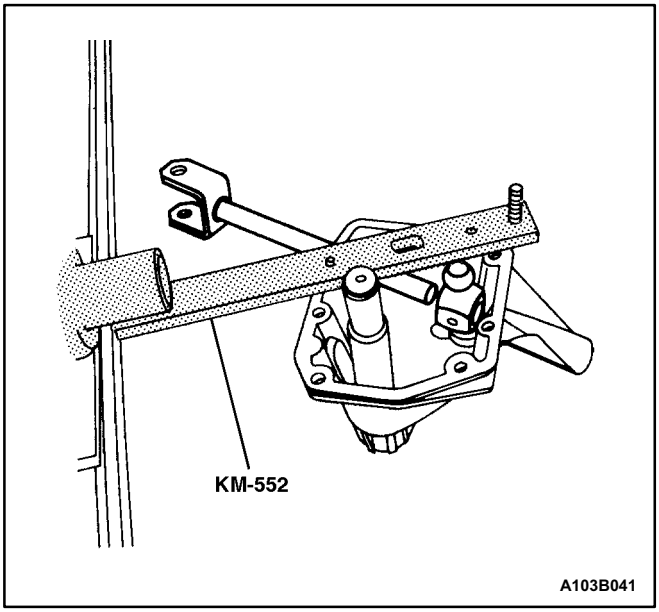

9. Remove the gearshift rod and the shift finger lever.

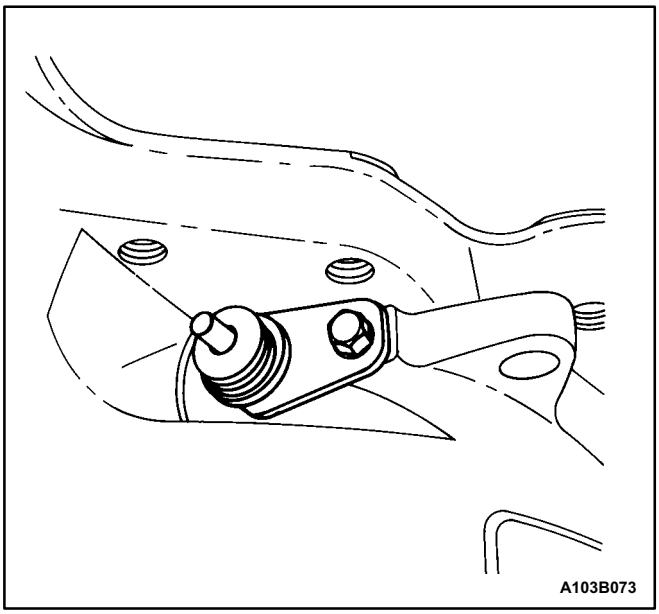

10. Remove the bolt and the speedometer driven gear from the transaxle housing.

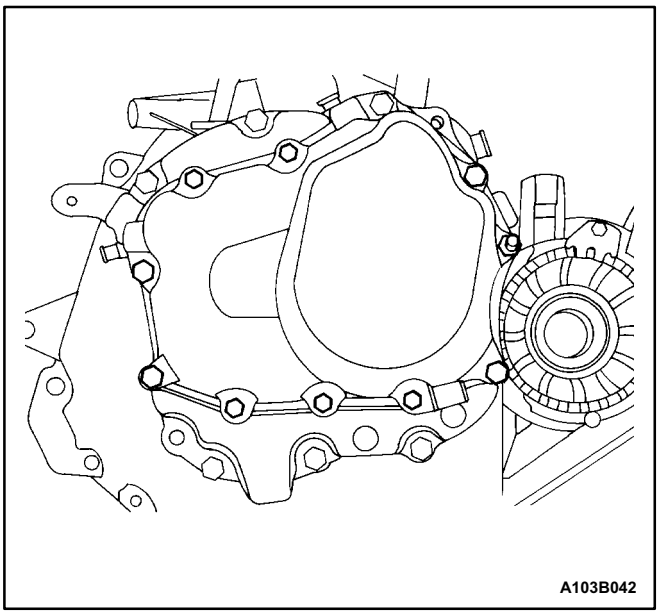

11. Remove the transaxle cover bolts.

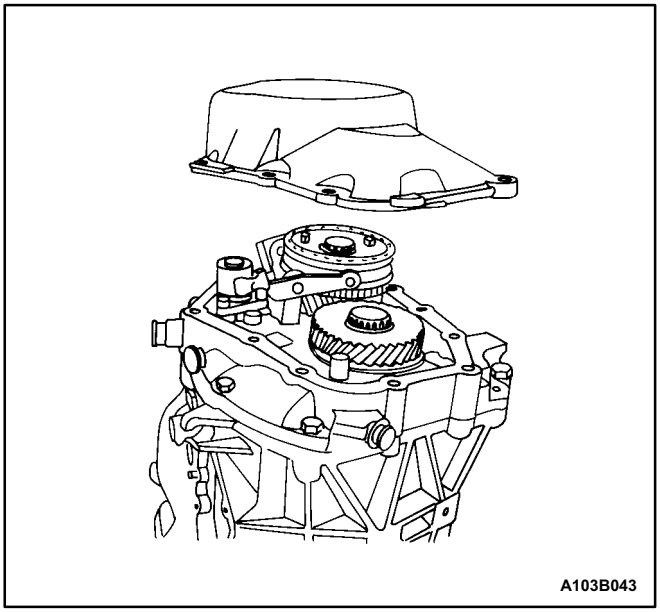

12. Remove the transaxle cover.

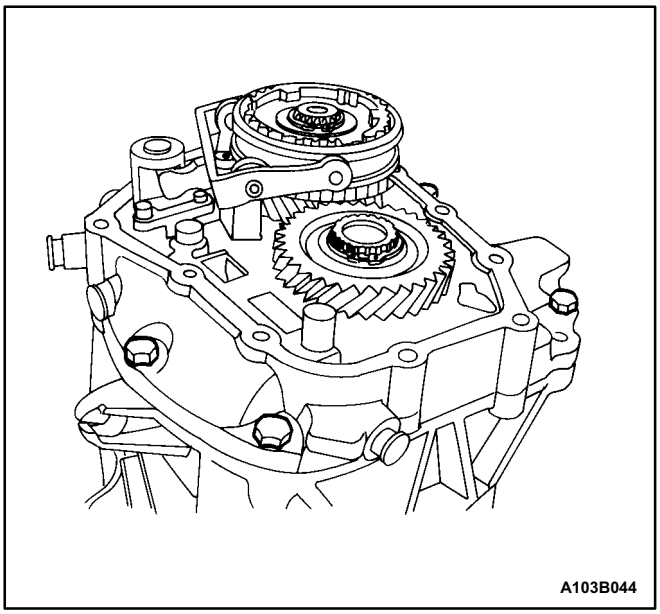

13. Shift the transaxle into second gear.
14. Remove the bearing plate bolts.

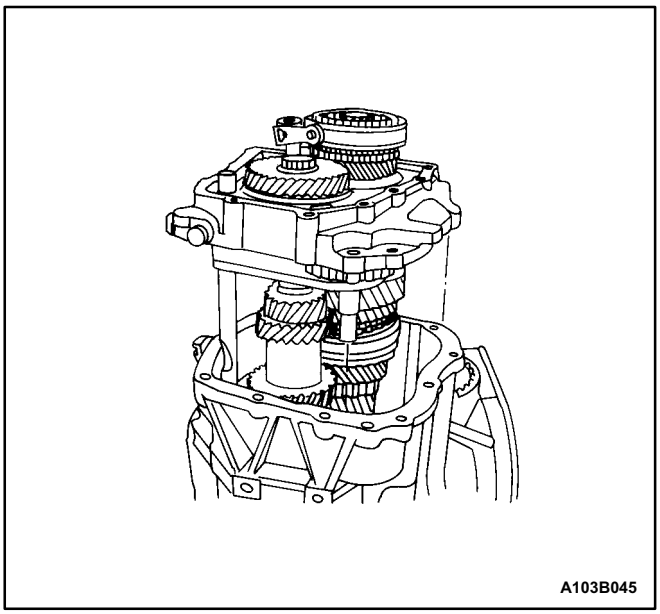

15. Remove the bearing plate from the case with the shafts attached.

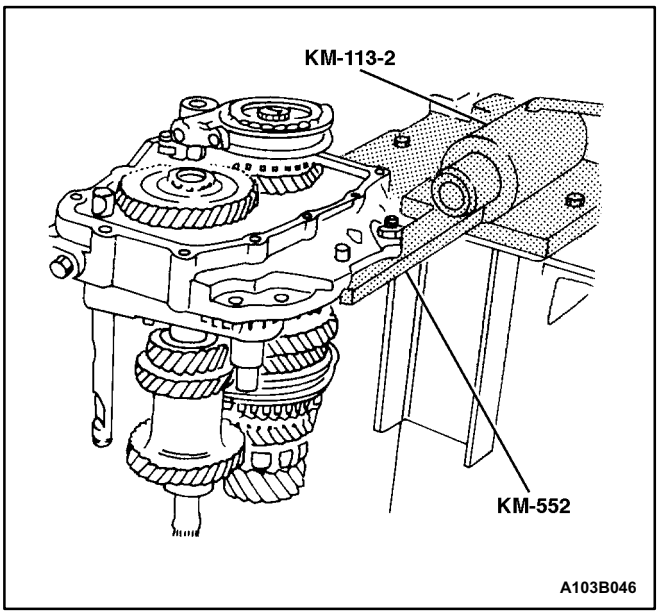

16. Shift the transaxle into reverse (R).
17. Bolt the bearing plate to the fixture KM-552 and install the fixture KM-552 into the base KM-113-2.

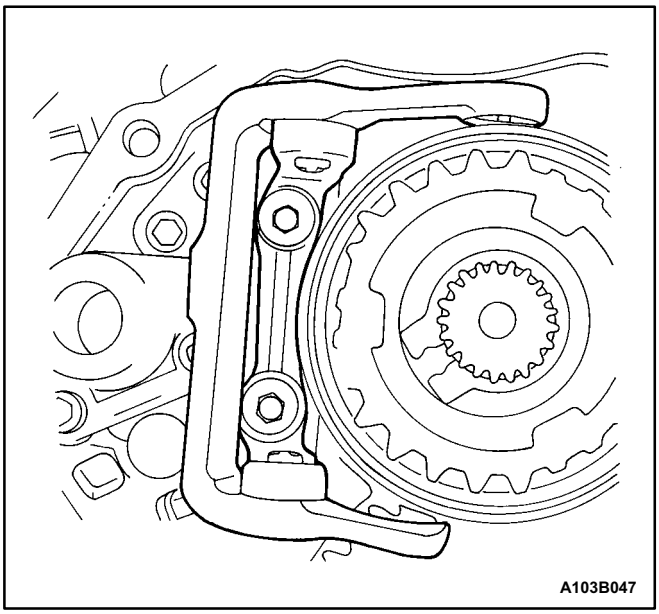

18. Remove the bolts and the fifth gear fork from the bearing plate.

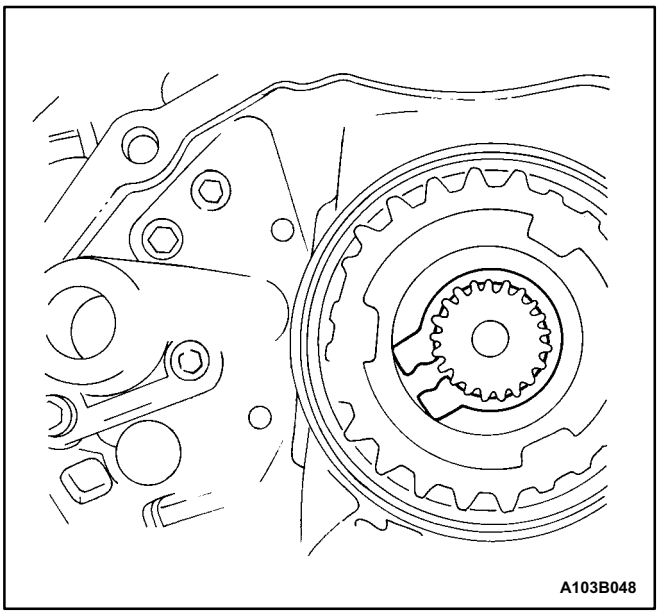

19. Remove the mainshaft driven fifth speed assembly snap ring.

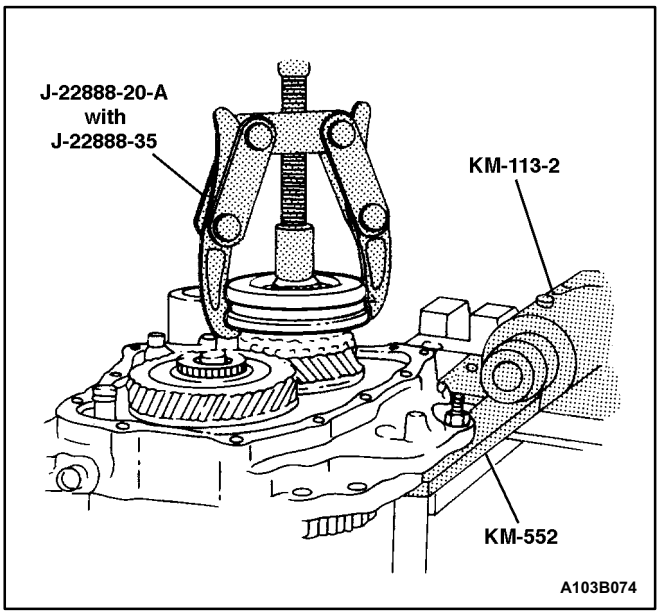

20. Remove the fifth driven gear synchronizer sleeve and the synchronizer gear using the bearing puller J-22888-20-A with the puller legs J-22888-35.

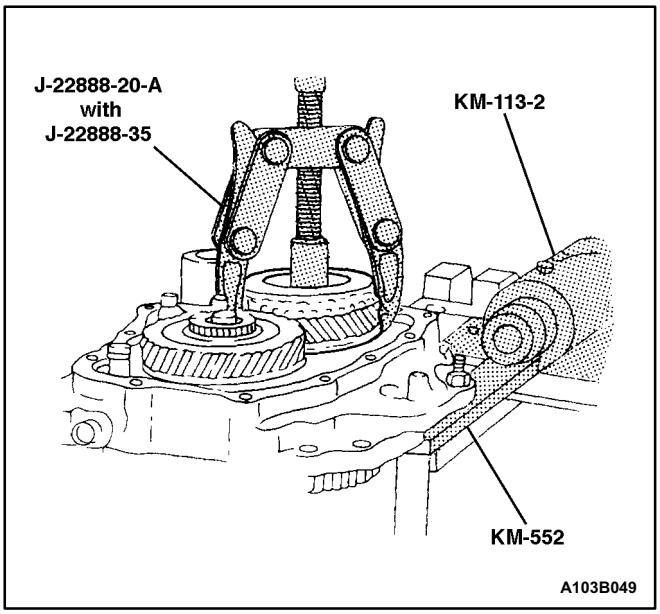

21. Remove the mainshaft driven fifth gear assembly.

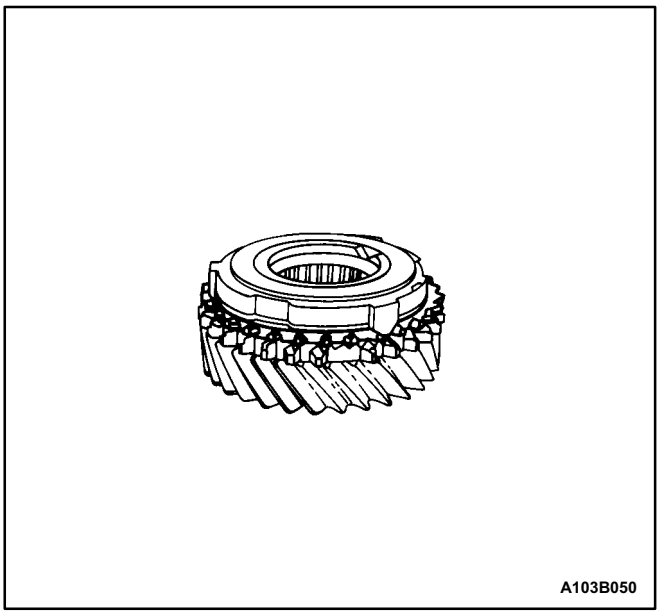

22. Remove the brass synchronizer ring.

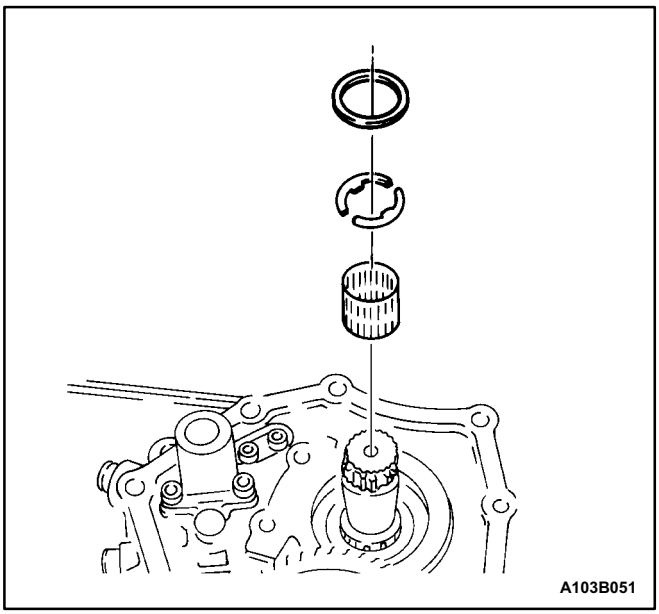

23. Remove the needle bearing, the retaining ring, and the thrust washers.

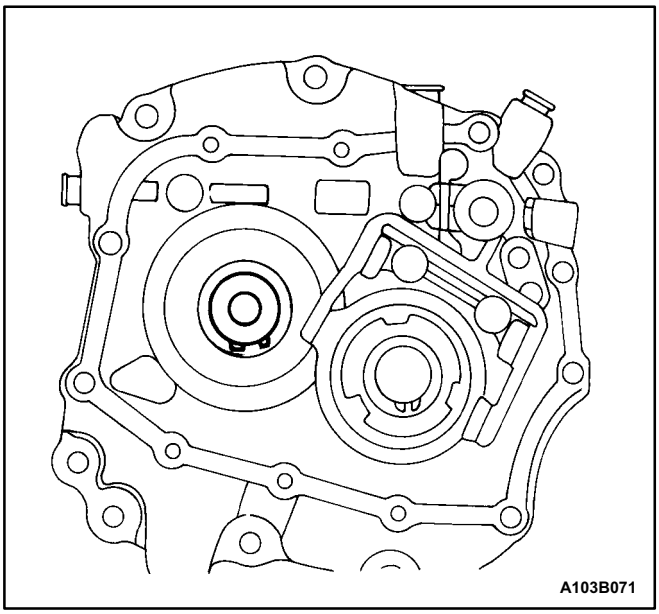

24. Remove the input drive fifth gear snap ring.

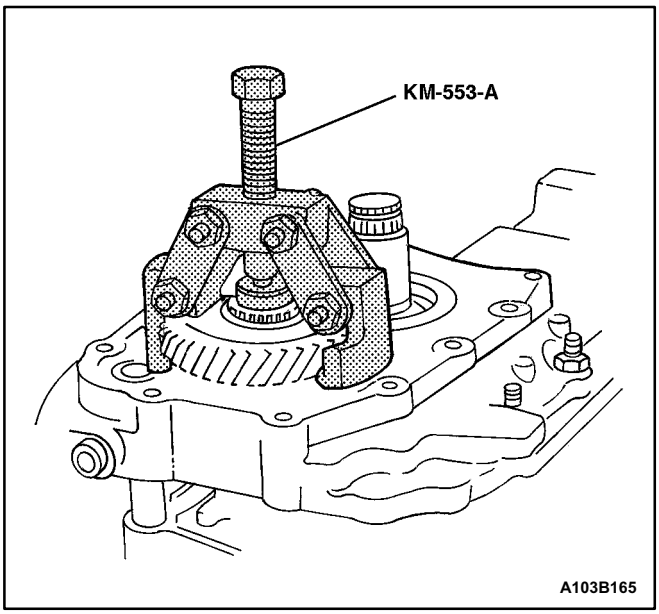

25. Remove the input drive fifth gear using the fifth gear puller KM 553 A.

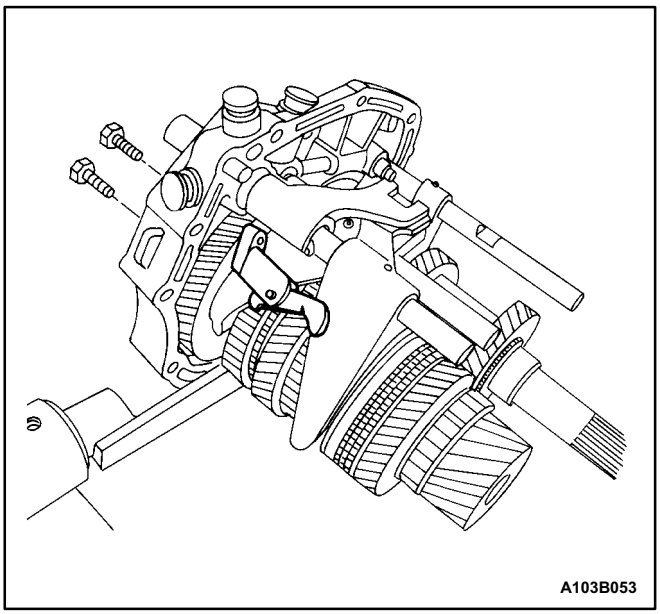

26. Remove the bolts and the fifth gearshift connector from the bearing plate using the pawl.

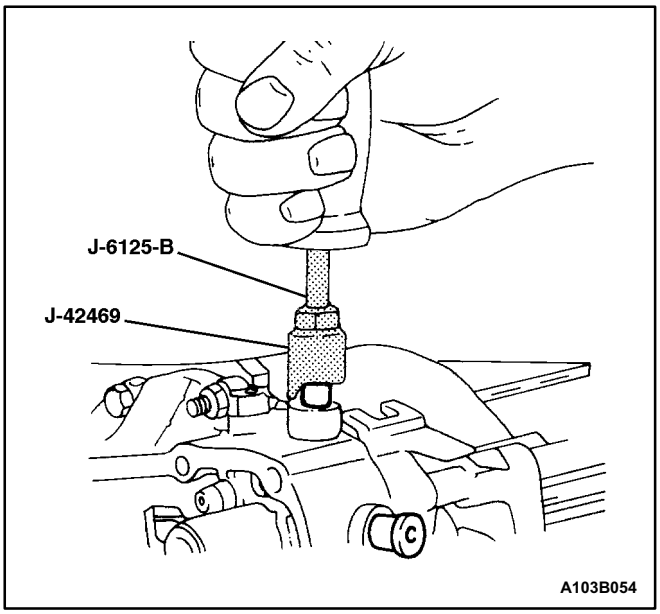

27. Remove the four shift rod plugs using the shift rod remover J 42469 and the slide hammer J-6125-B.

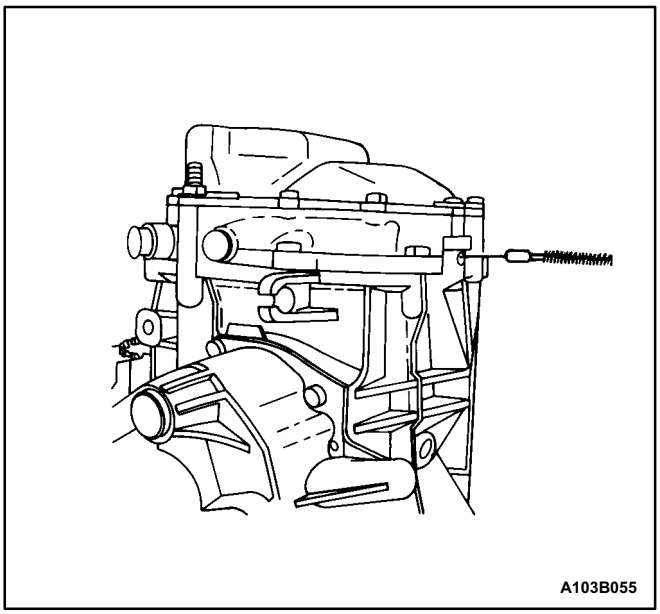

28. Remove the spring and the rod lock pin from the small plug hole.

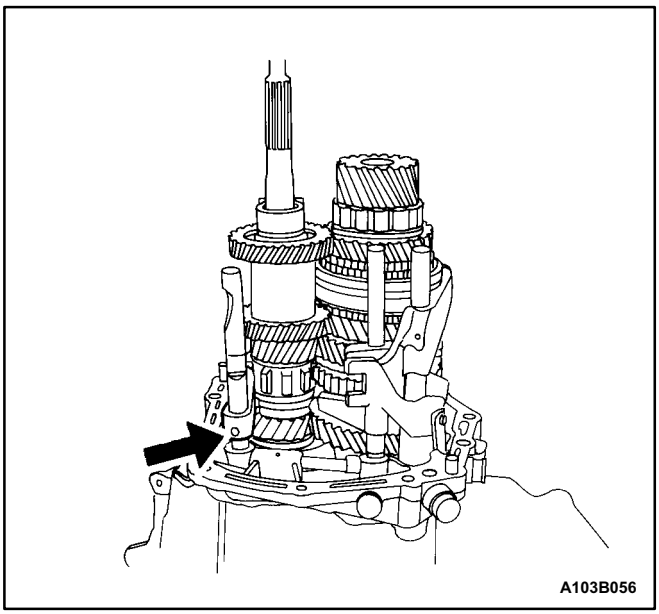

29. Remove the pin from the reverse gearshift rod/fork assembly.

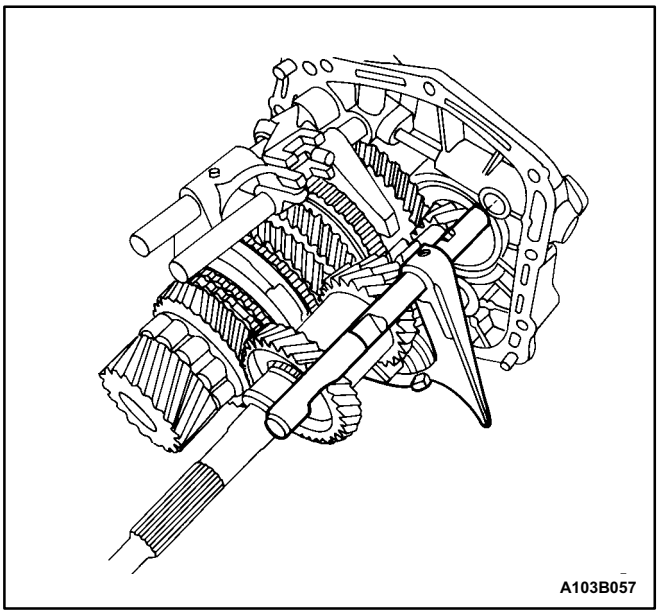

30. Remove the reverse gearshift rod/fork assembly from the bearing plate.

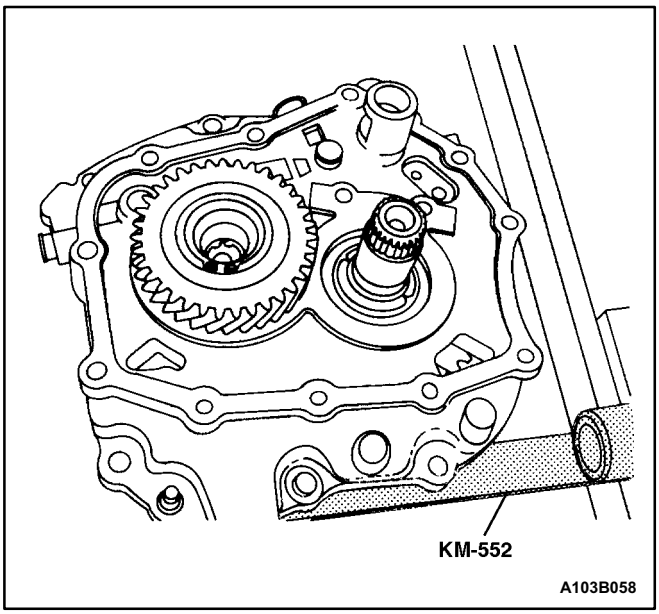

31. Remove the bolts from the support bracket.

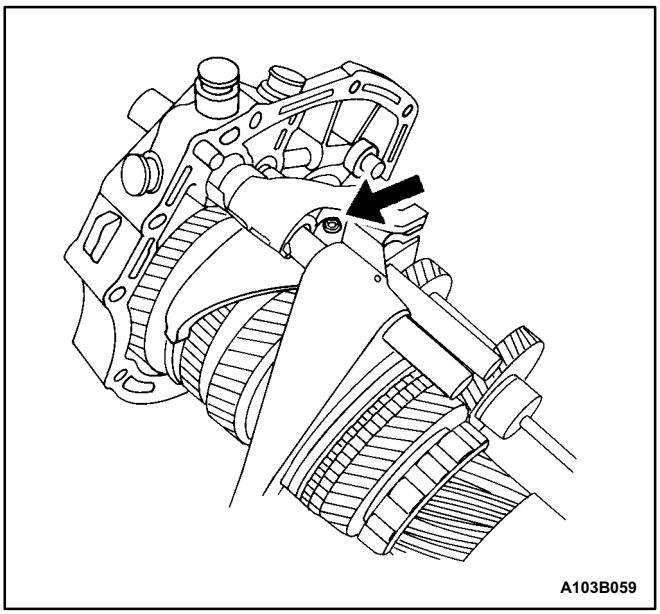

32. Remove the first second gearshift fork holding pin.

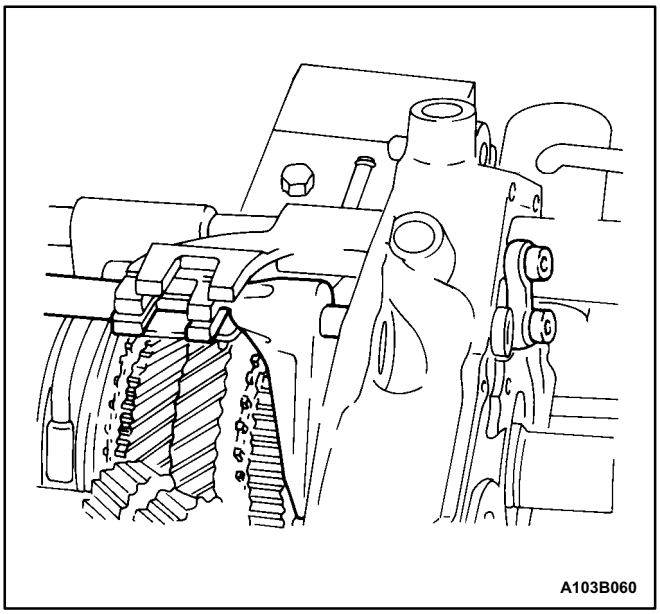

33. Drive the first second gearshift rod out until it is just free of the bearing plate.

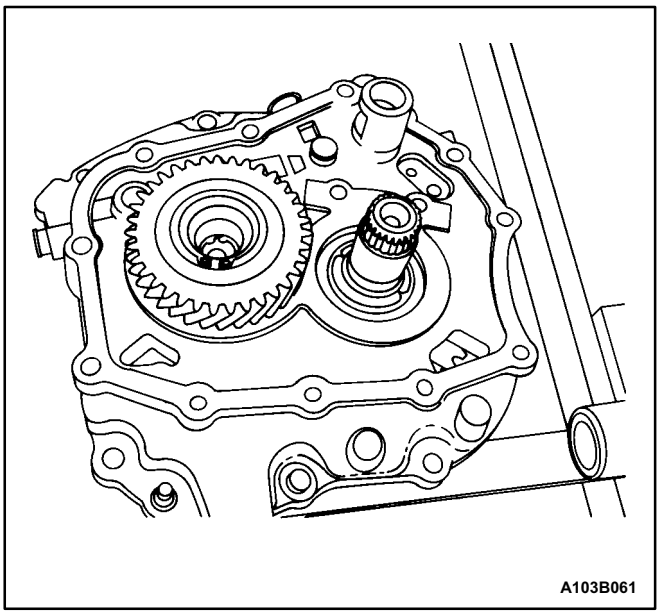

34. Remove the support bracket from the bearing plate.

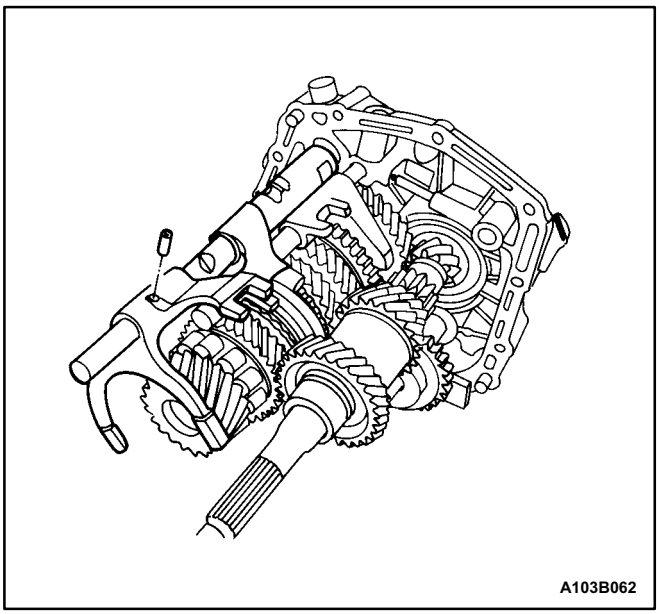

35. Remove the third-fourth gearshift fork holding pin and the third-fourth gearshift rod.

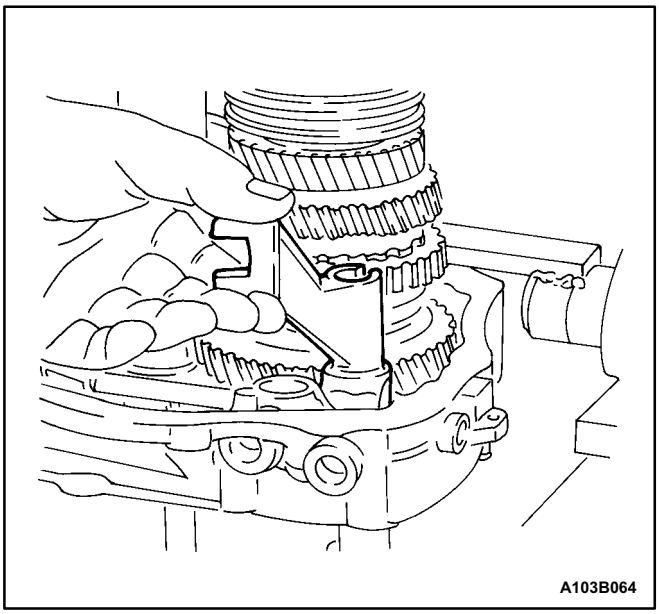

36. Remove the fifth gearshift lever from the bearing plate.

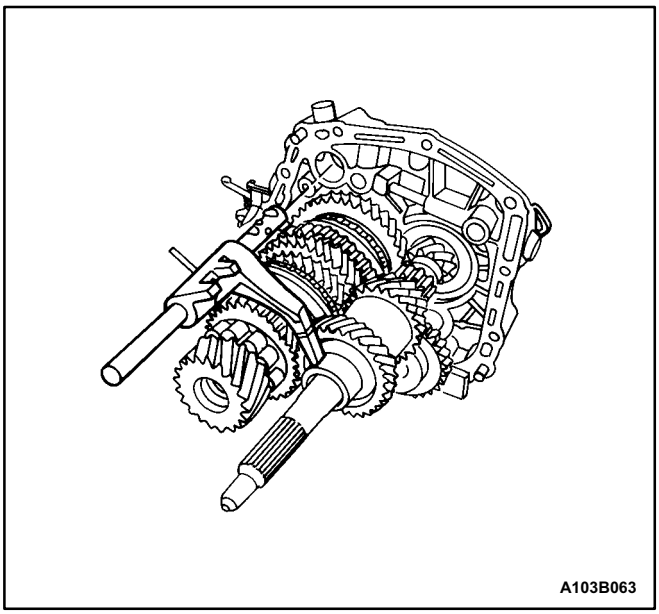

37. Remove the first-second gearshift rod.

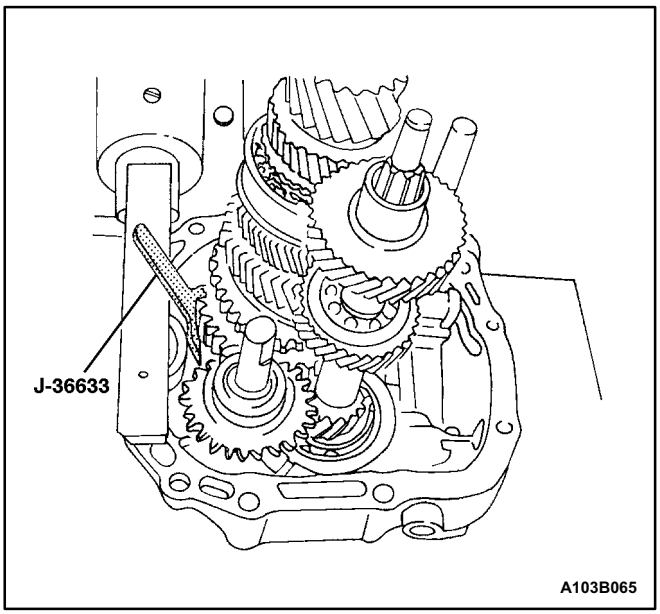

38. Compress the snap ring that holds the mainshaft and secure it with the snap ring retainer J-36633.

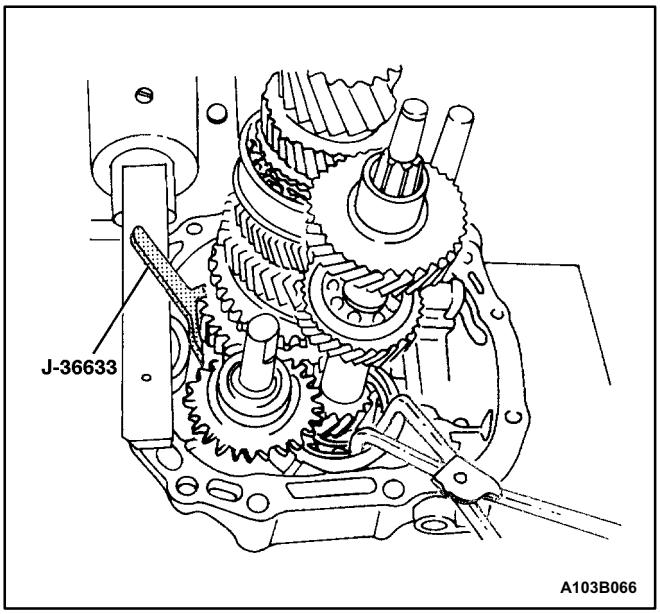

39. Hold the snap ring open at the base of the input shaft using the snap ring pliers.
40. Remove the mainshaft assembly and the input shaft assembly from the bearing plate.

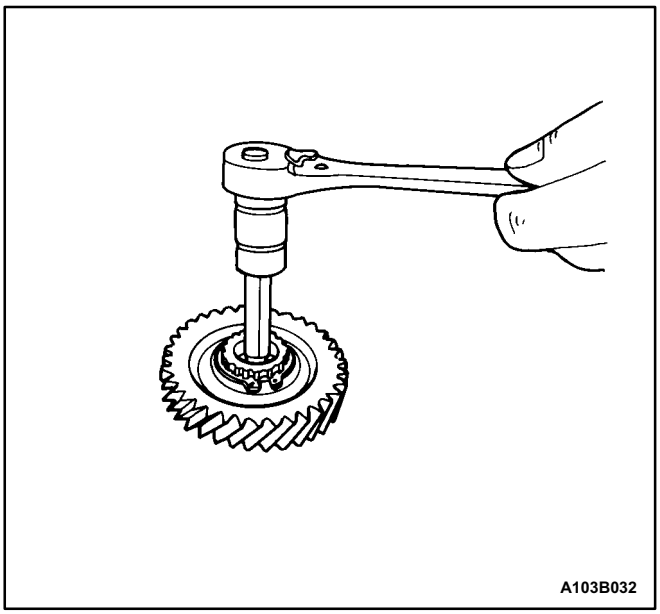

INPUT SHAFT AND CLUSTER GEAR

Tools Required

J-22912-01 Universal Bearing Puller

Disassembly Procedure

1. Remove the detent screw at the end of the input driveshaft.

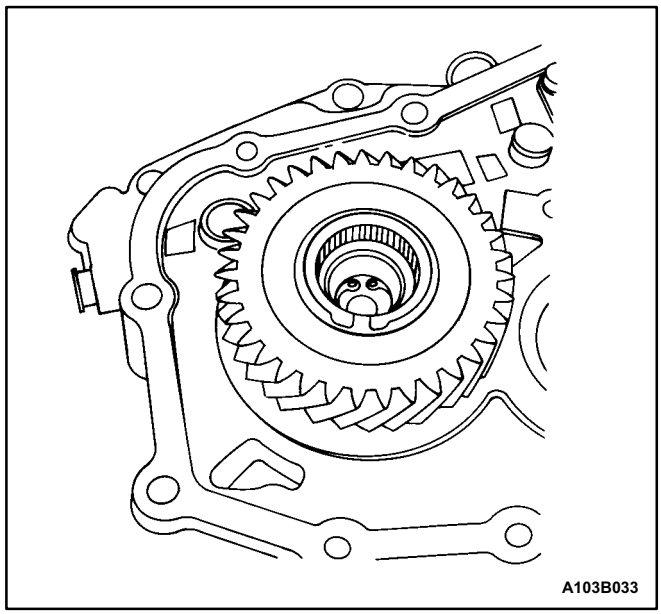

2. Remove the snap ring at the base of the gear cluster.

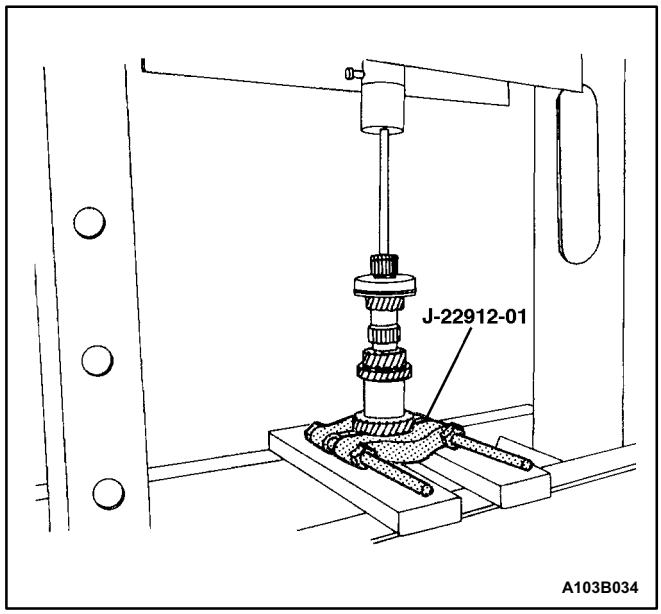

3. Press the input driveshaft from the input shaft cluster gear using the universal bearing puller J-22912-01.

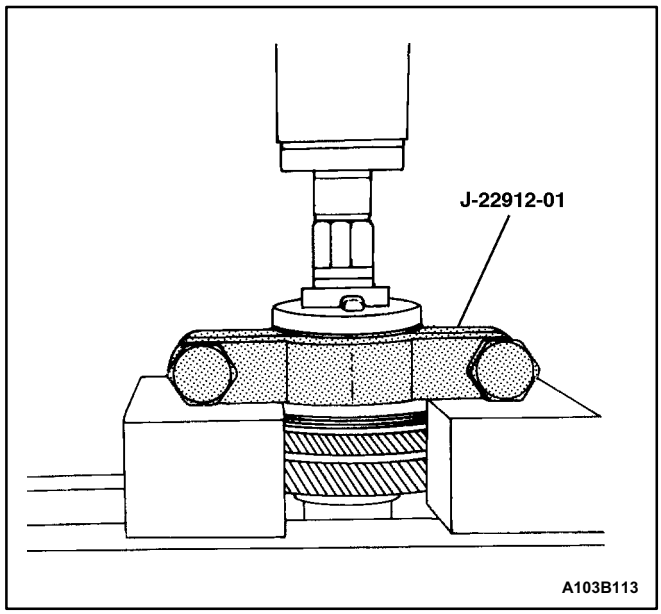

4. Remove the cluster shaft bearing from the input shaft gear cluster using universal bearing puller J-22912-01.

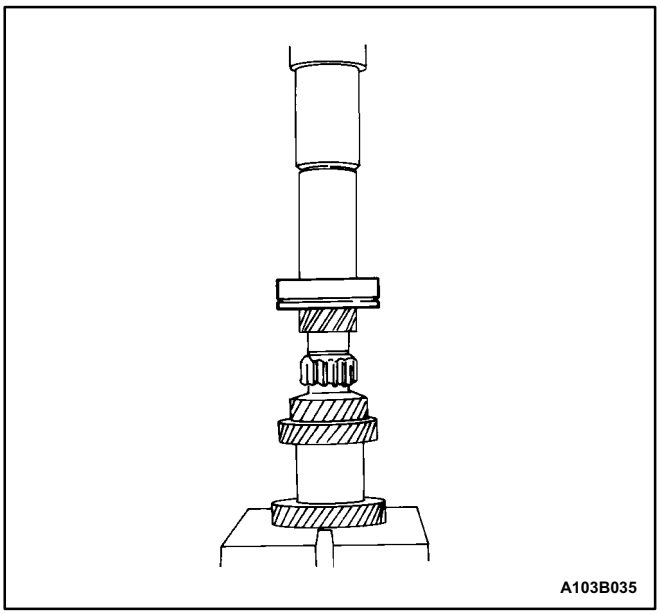

Assembly Procedure

1. Press the cluster shaft bearing onto the input shaft gear cluster.

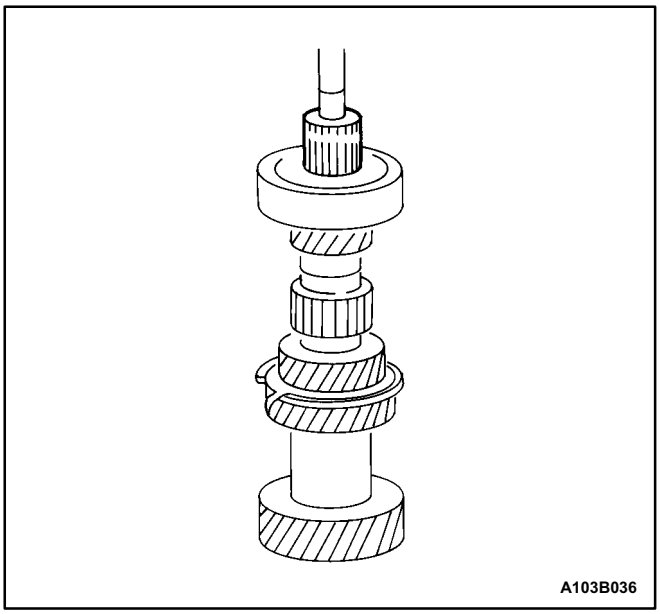

2. Press the input driveshaft into the input shaft gear cluster assembly.

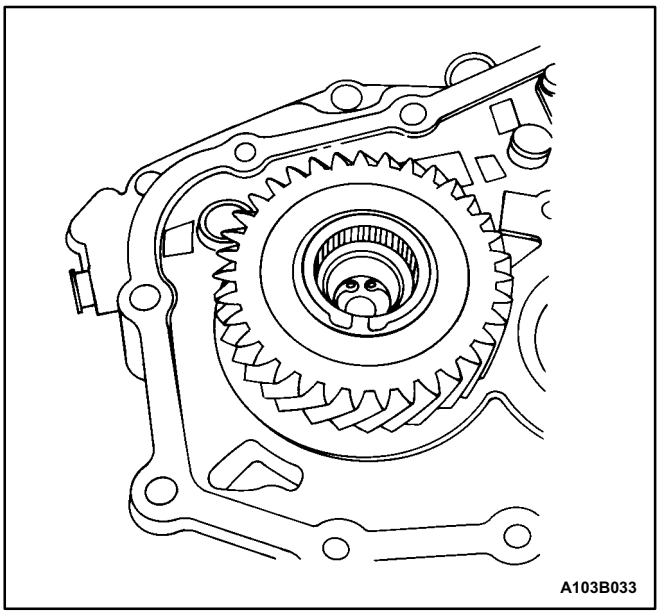

3. Install the snap ring at the base of the gear cluster.

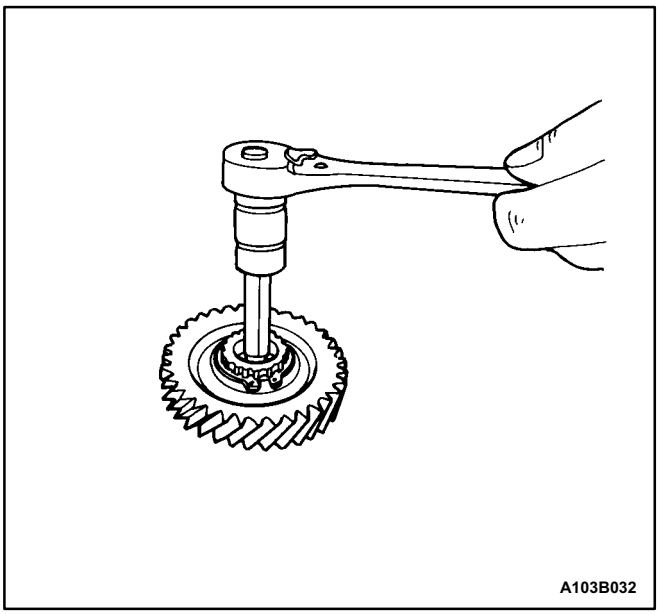

4. Install the detent screw at the end of the input driveshaft.

Tighten

Tighten the input driveshaft detent screw to 15 N•m (11 lb•ft).

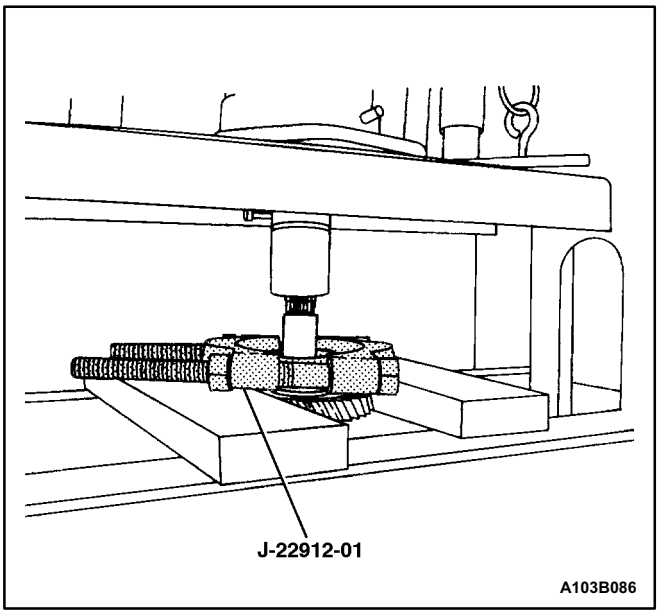

MAINSHAFT

Tools Required

J-22912-01 Universal Bearing Puller

Disassembly Procedure

1. Remove the mainshaft bearing using the universal bearing puller J-22912-01.

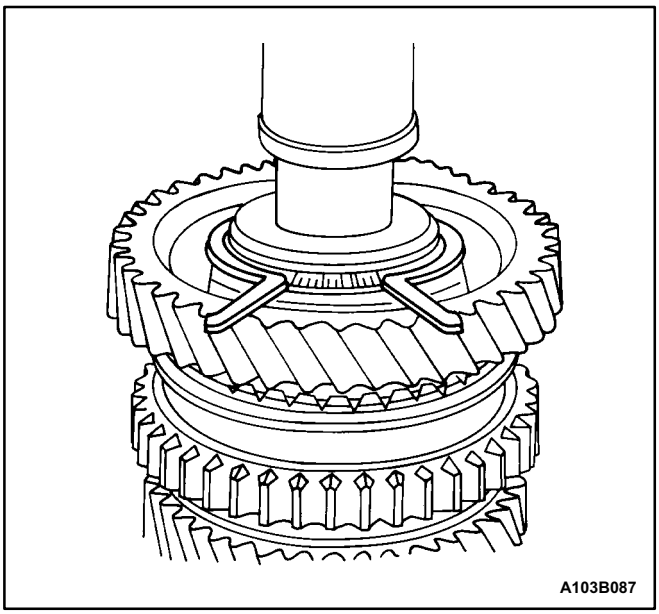

2. Remove the snap ring.

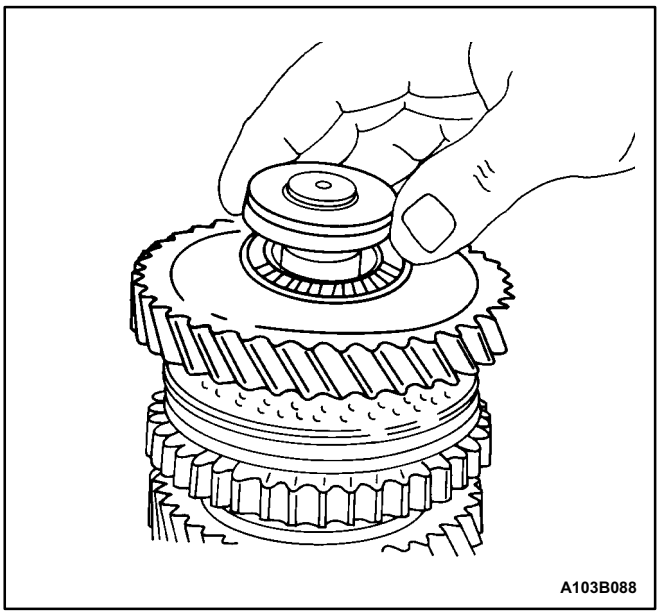

3. Remove the first gear, the flat type first gear needle bearing, and the mainshaft wear plate.

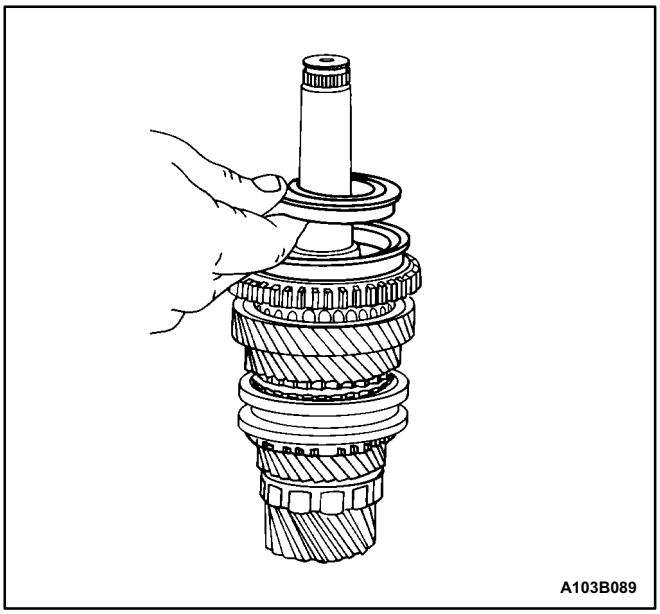

4. Remove the synchronizer hub sleeve that contains the synchronizer spring.
5. Remove the outer blocking ring.

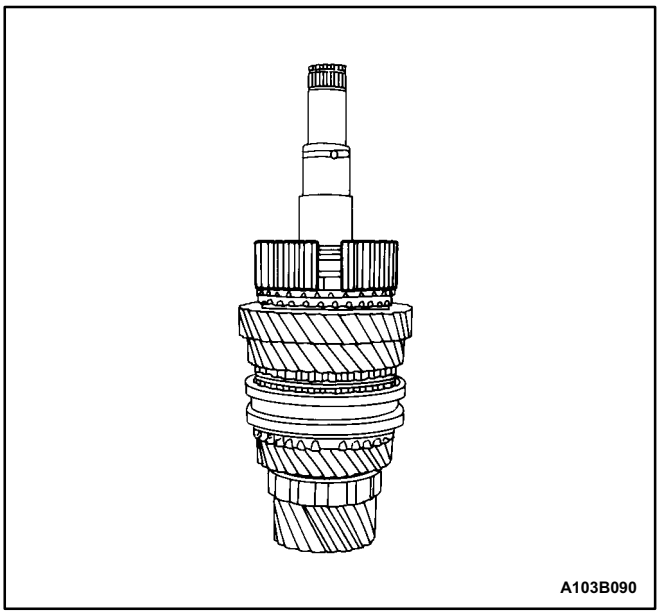

6. Remove the keys from the first-second synchronizer gear.

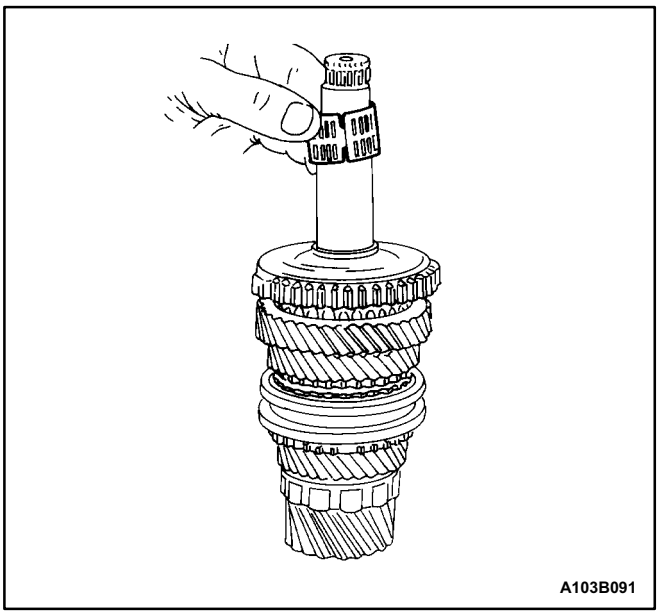

7. Remove the barreltype firstgear needle bearing.

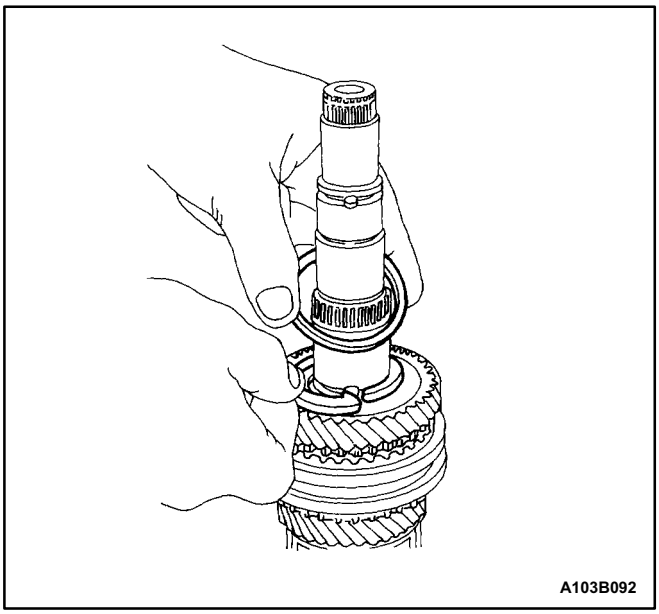

8. Remove the snap ring and the washer.

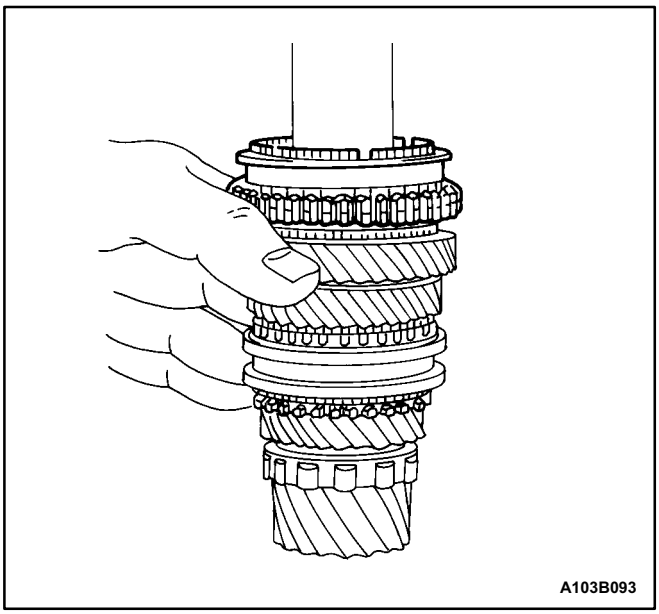

9. Remove the first-second synchronizer gear from the mainshaft.

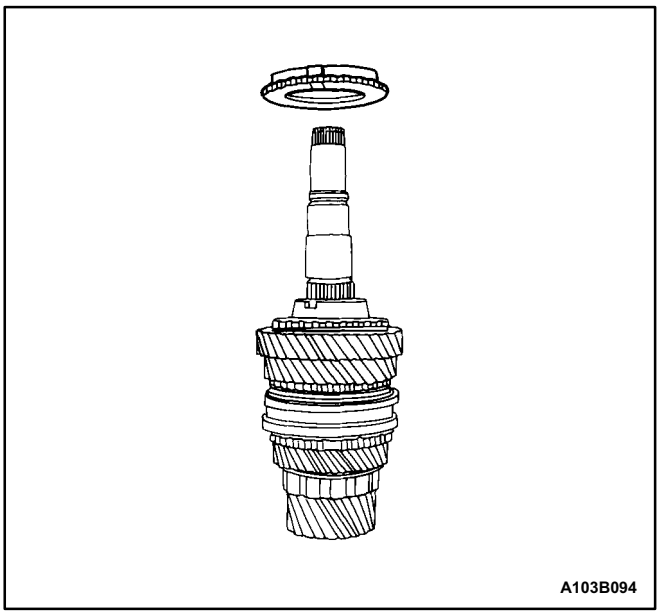

10. Remove the first second gear blocking ring.

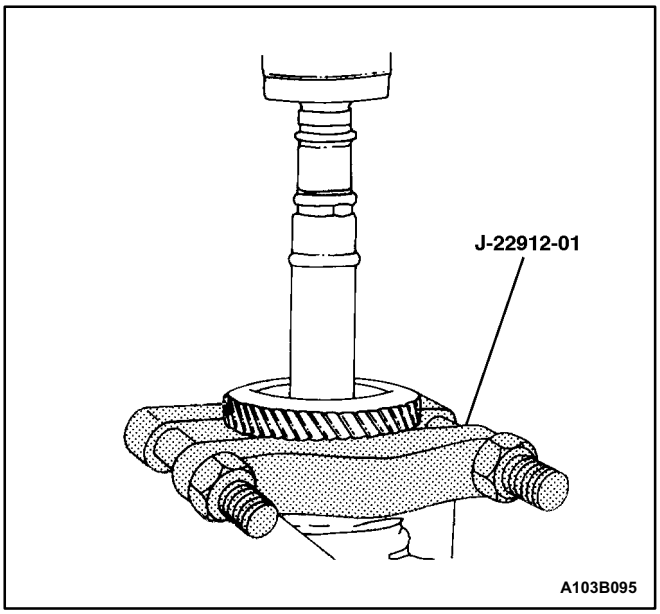

11. Remove the second gear using the universal bearing puller J-22912-01.

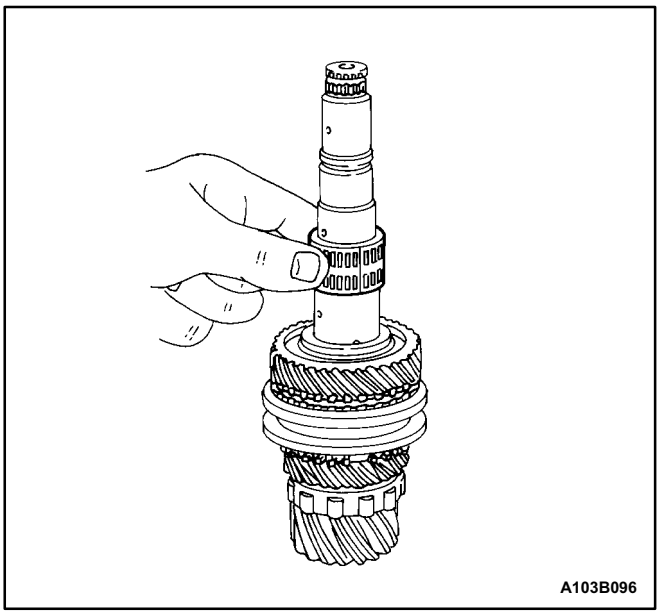

12. Remove the second gear needle bearing.

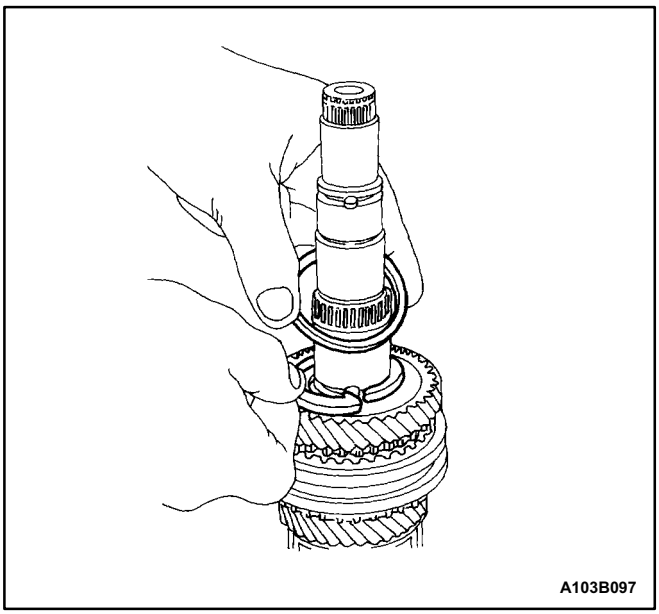

13. Remove the ring and the thrust washer.

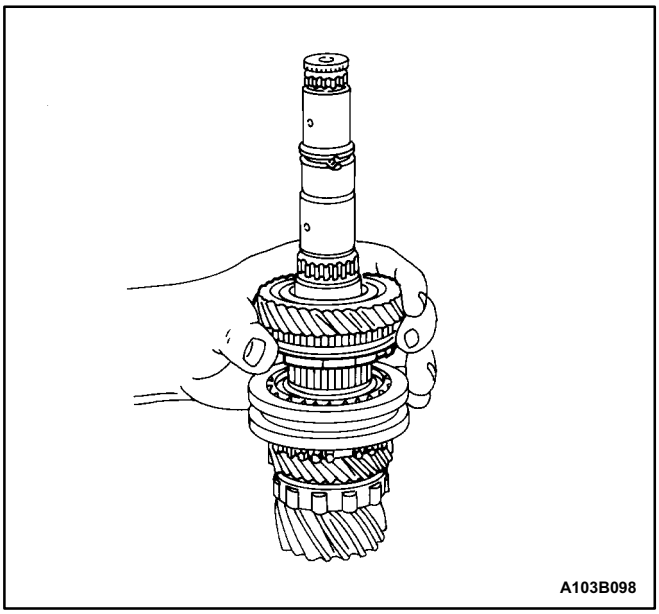

14. Remove the third gear and the synchronizer blocking ring.

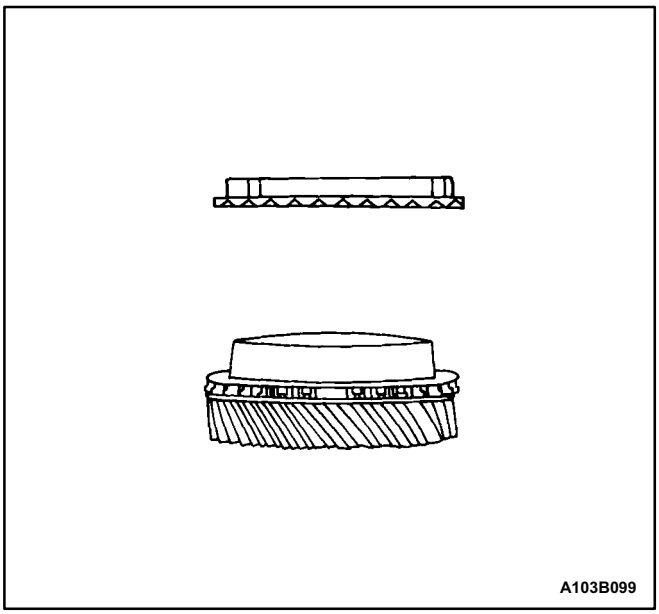

15. Separate the synchronizer blocking ring from the third gear.

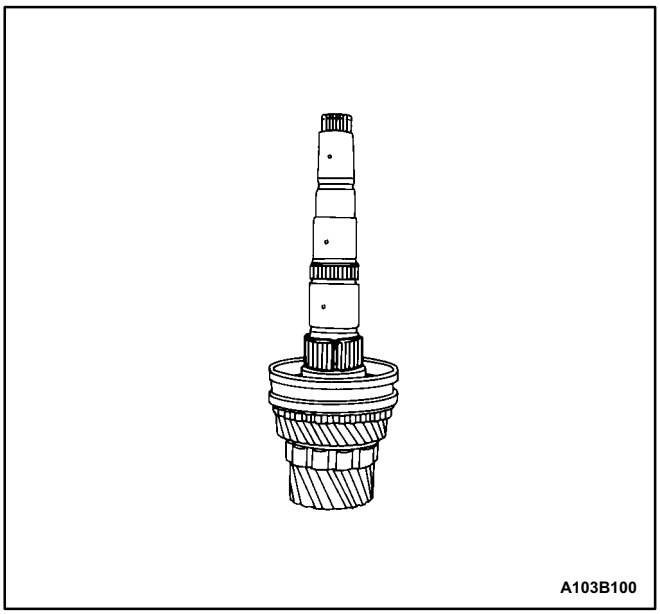

16. Remove the third gear needle bearing from the mainshaft.

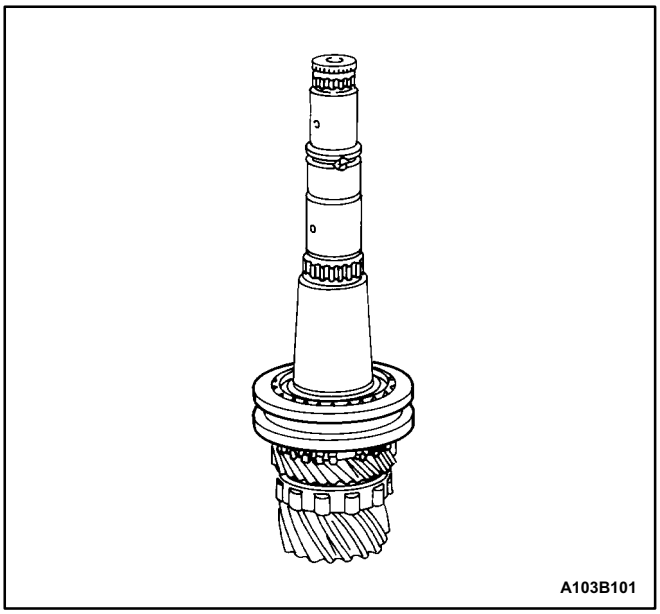

17. Remove the synchronizer sleeve that contains the keys and the spring.

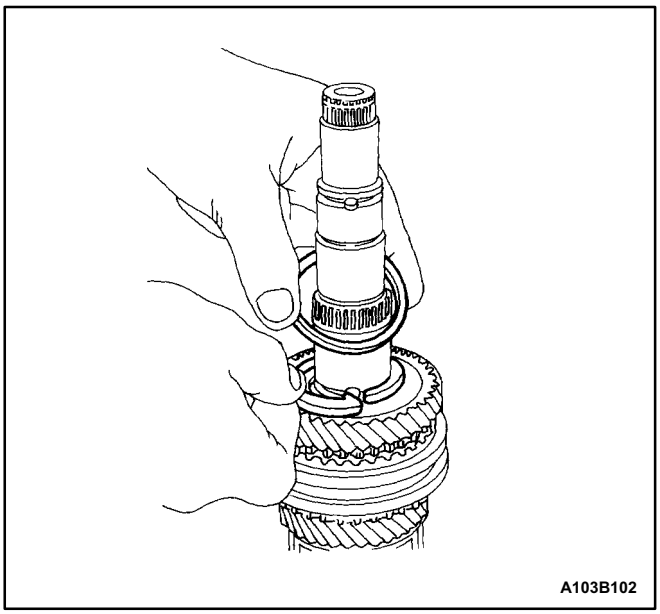

18. Remove the snap ring and the washer from the mainshaft.

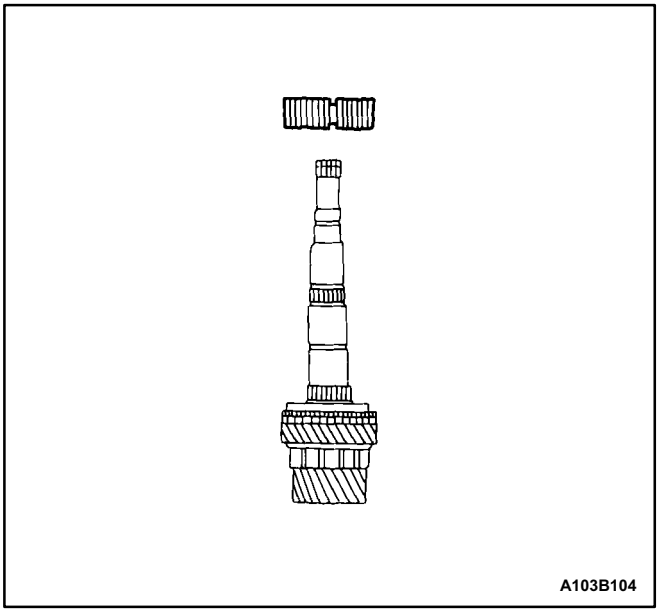

19. Remove the third-fourth synchronizer gear that contains the synchronizer spring.

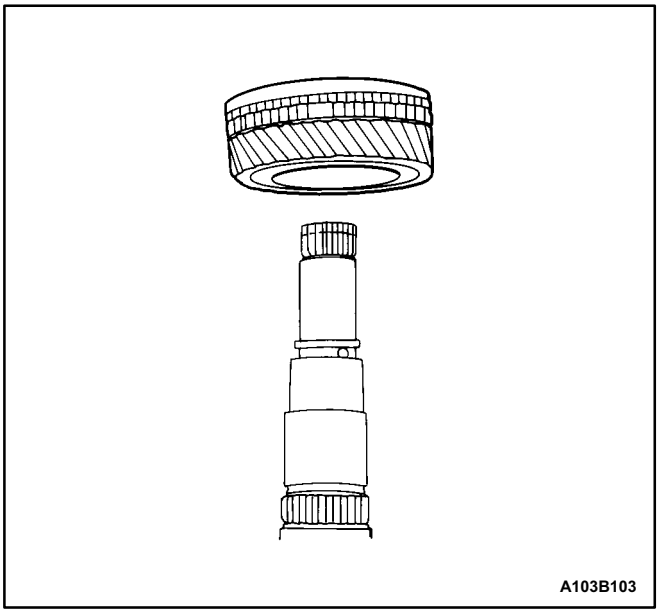

20. Remove the fourth gear assembly.

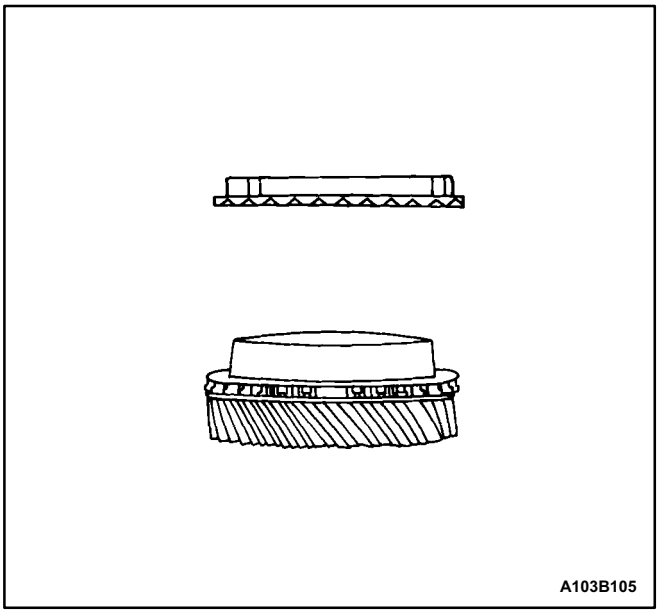

21. Separate the synchronizer blocking ring from the fourth gear.

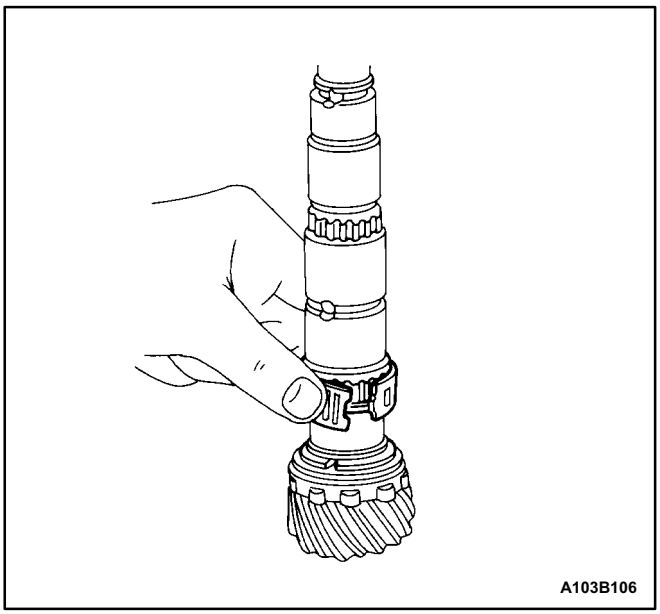

22. Remove the fourth gear needle bearing, the ring, and the thrust washer.

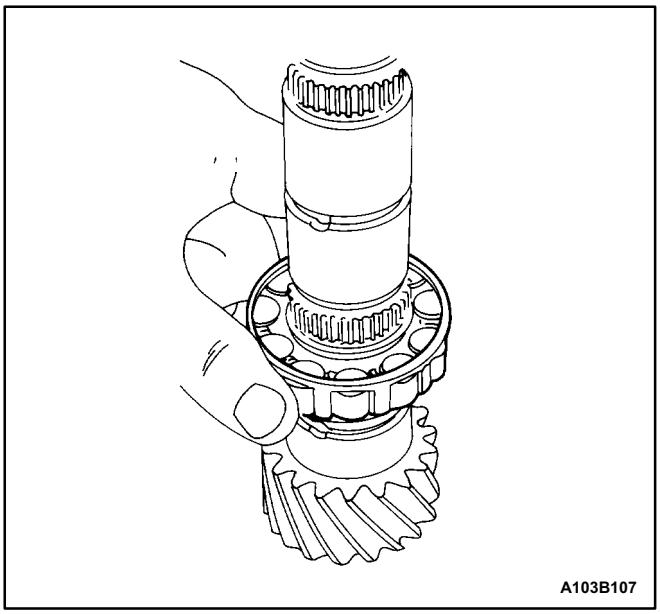

23. Remove the mainshaft bearing.

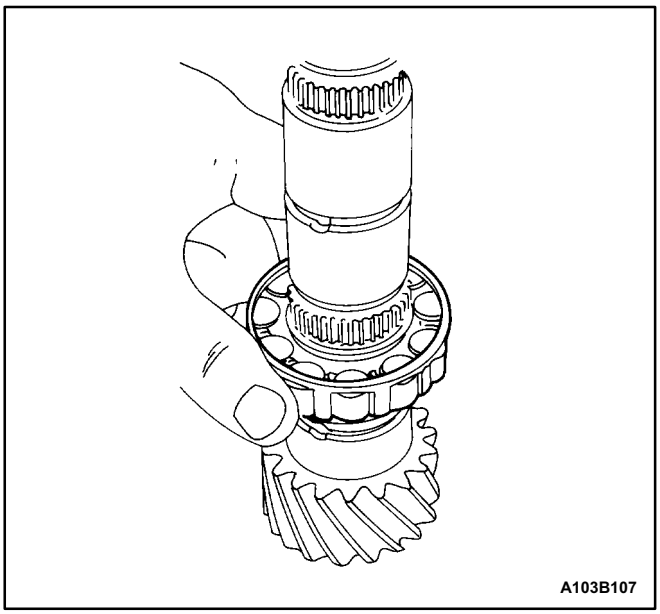

Assembly Procedure

1. Install the mainshaft bearing.

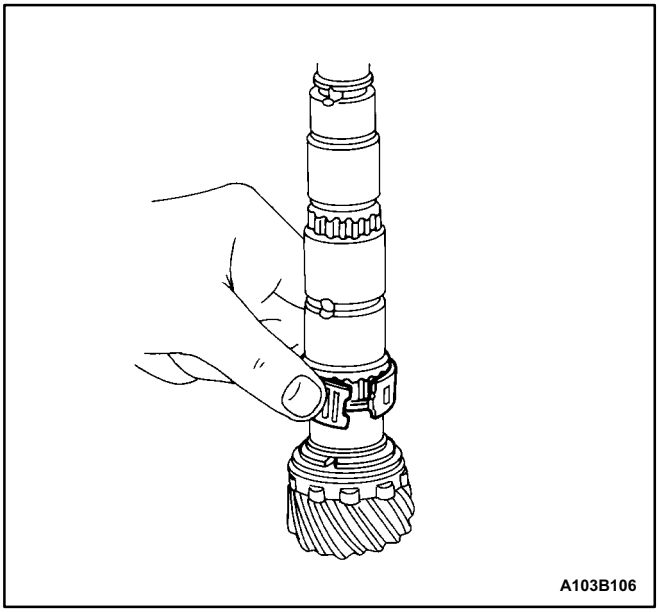

2. Install the ring, the thrust washer, and the fourth gear needle bearing.

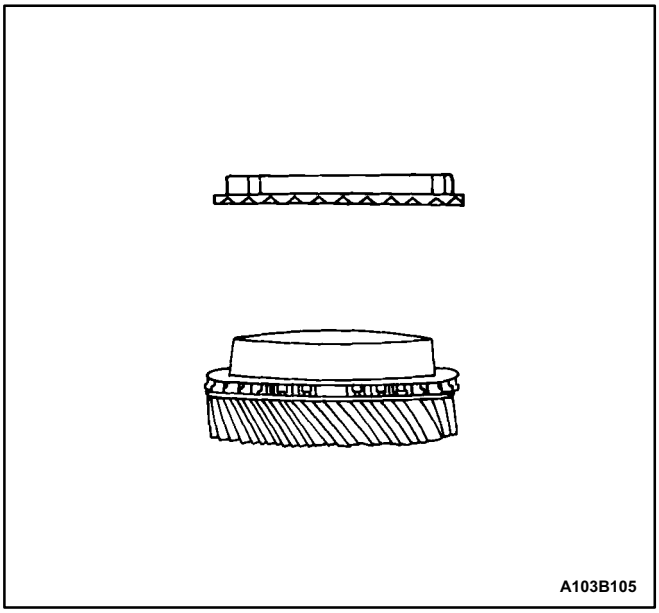

3. Attach the synchronizer blocking ring to the fourth gear.

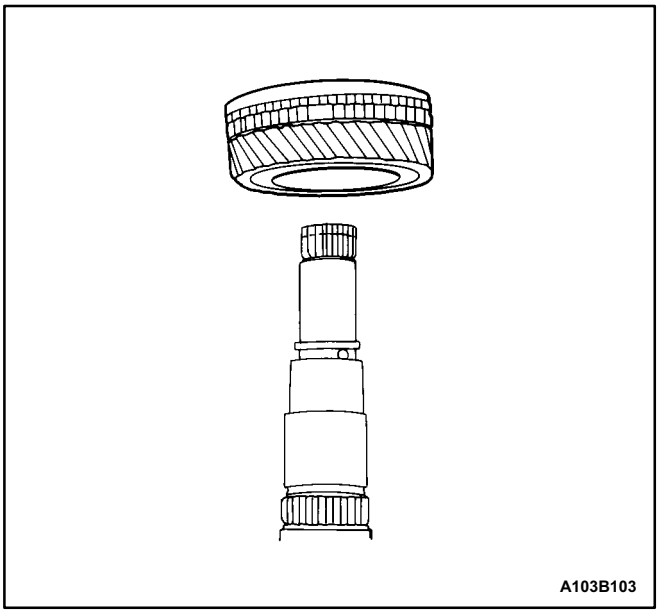

4. Install the fourth gear assembly.

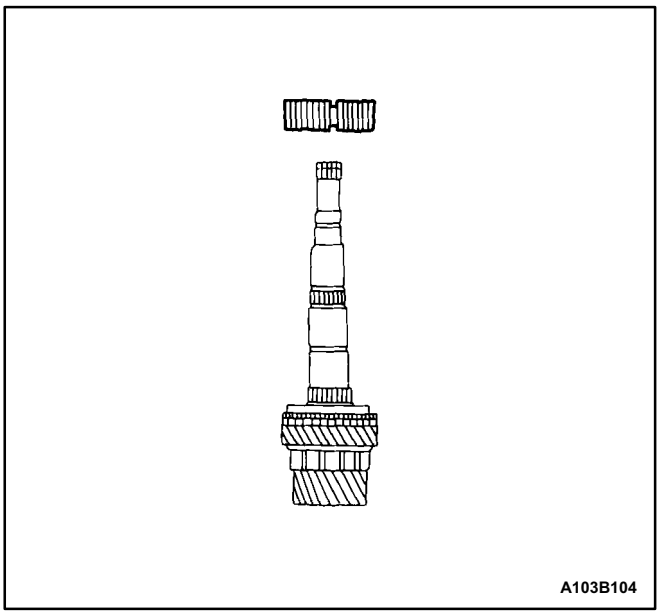

5. Install the third-fourth gear synchronizer that contains the synchronizer spring.

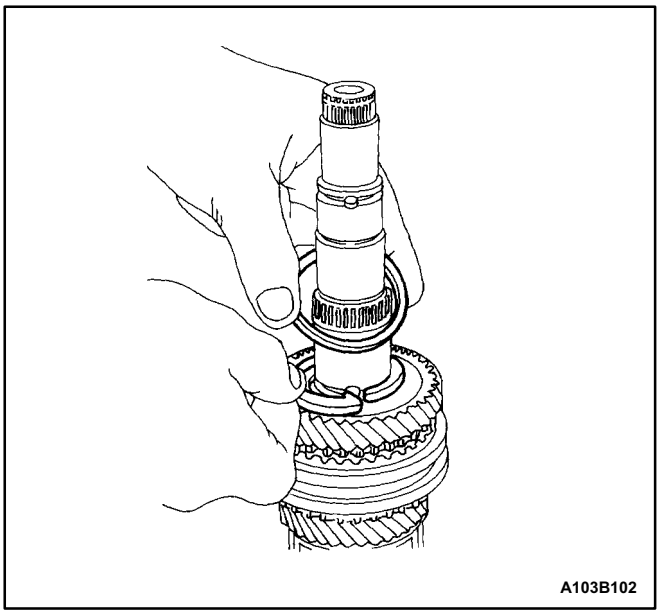

6. Install the snap ring and the washer around the mainshaft.

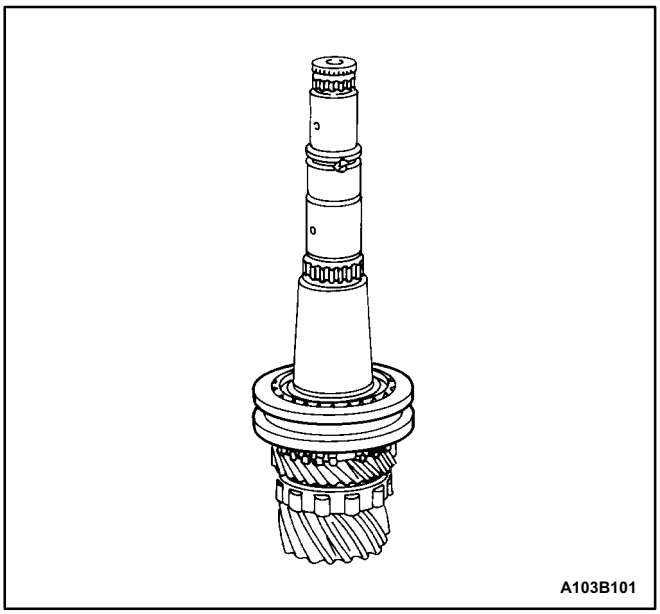

7. Install the synchronizer sleeve that contains the keys and the spring.

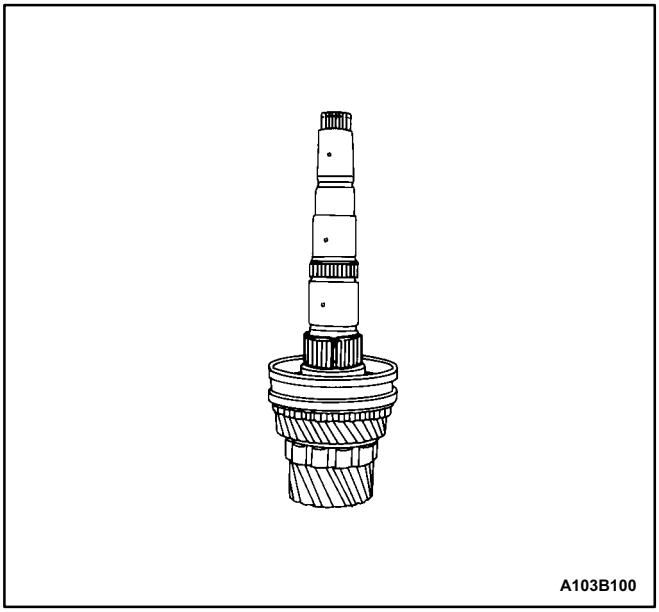

8. Install the third gear needle bearing.

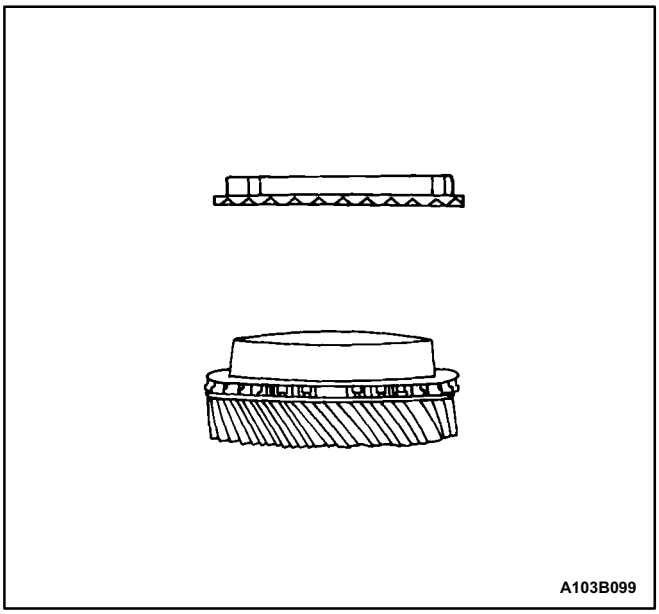

9. Attach the synchronizer blocking ring to the third gear.

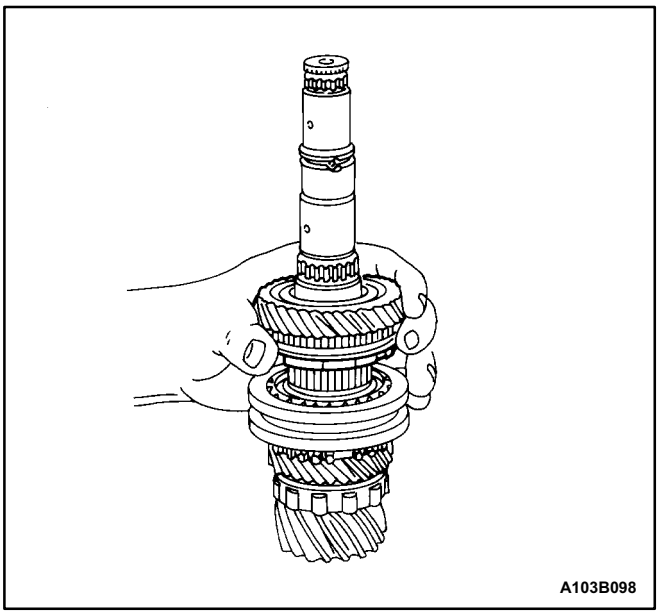

10. Install the third gear assembly.

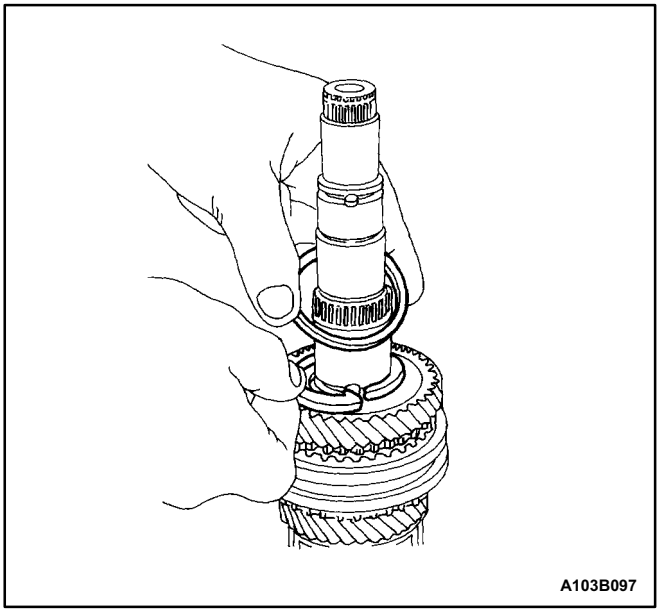

11. Install the thrust washer and the ring.

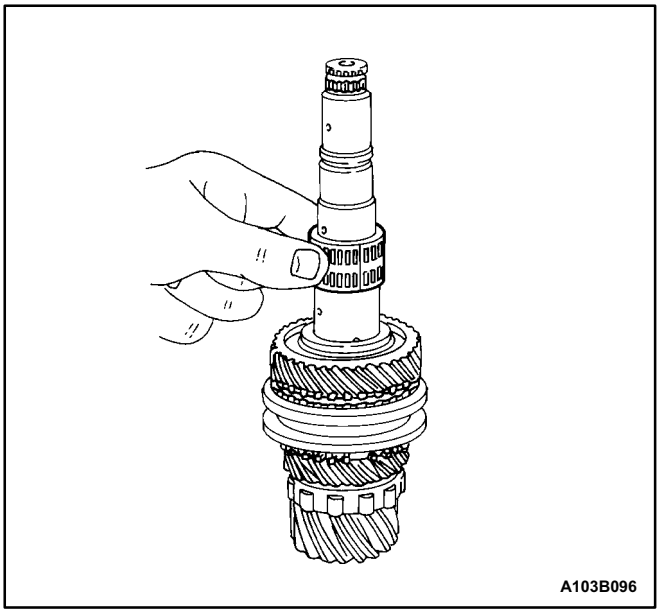

12. Install the second gear needle bearing.

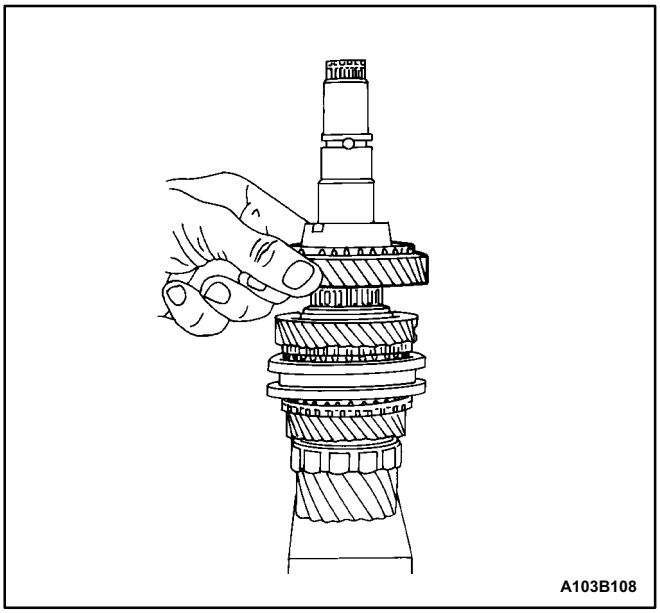

13. Install the second gear.

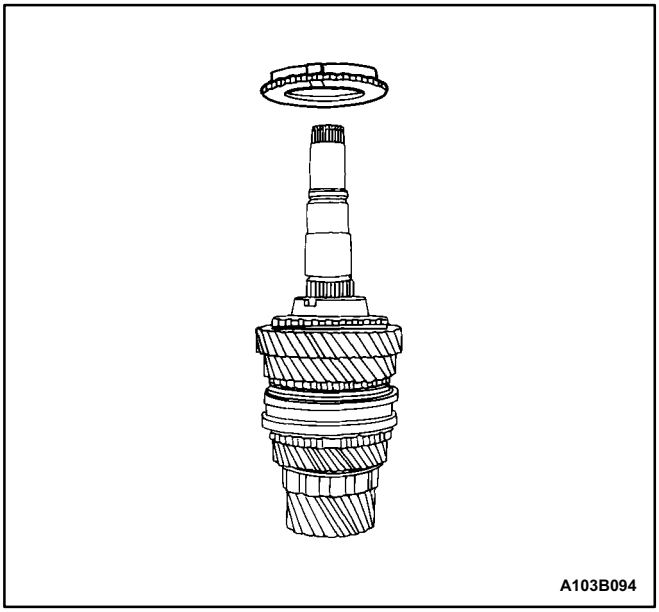

14. Install the first second gear blocking ring.

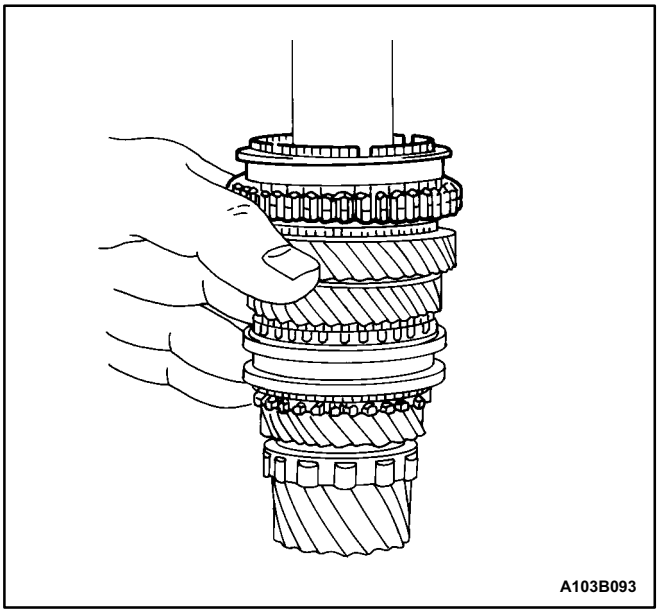

15. Install the first second synchronizer gear.

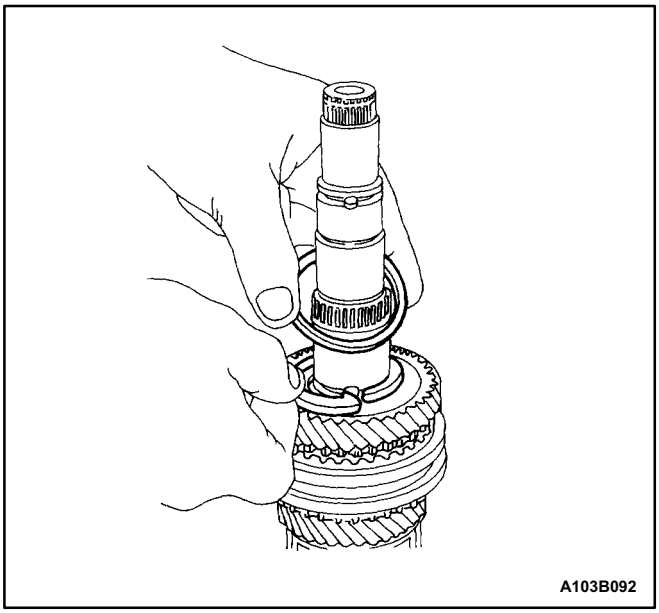

16. Install the washer and the snap ring.

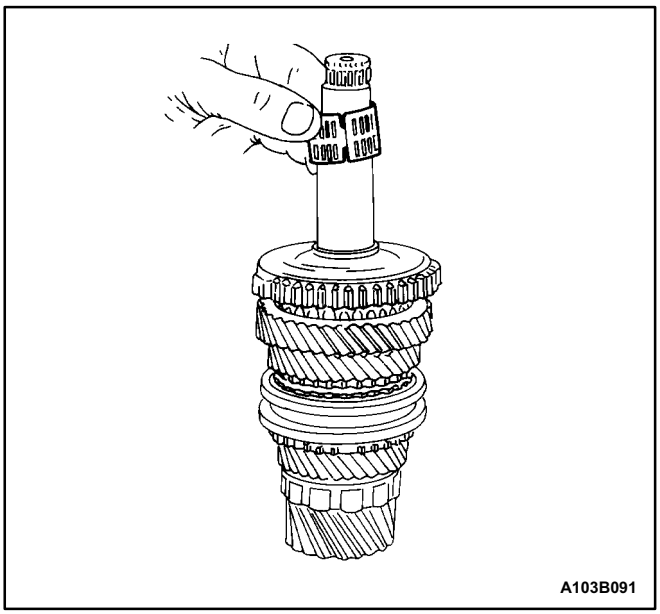

17. Install the first gear needle bearing.

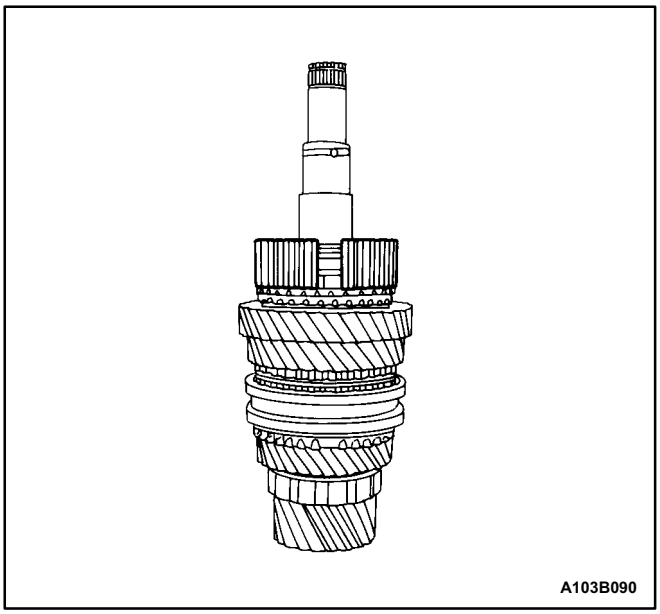

18. Install the keys onto the first-second synchronizer gear.

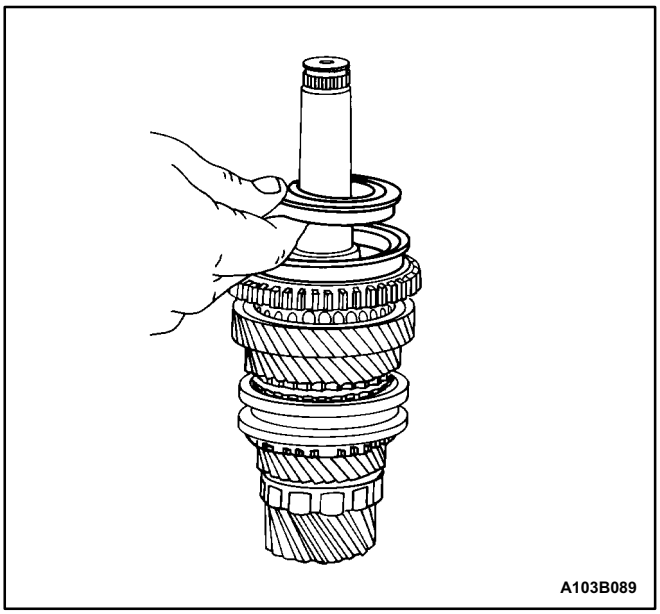

19. Install the synchronizer hub sleeve containing the synchronizer spring.

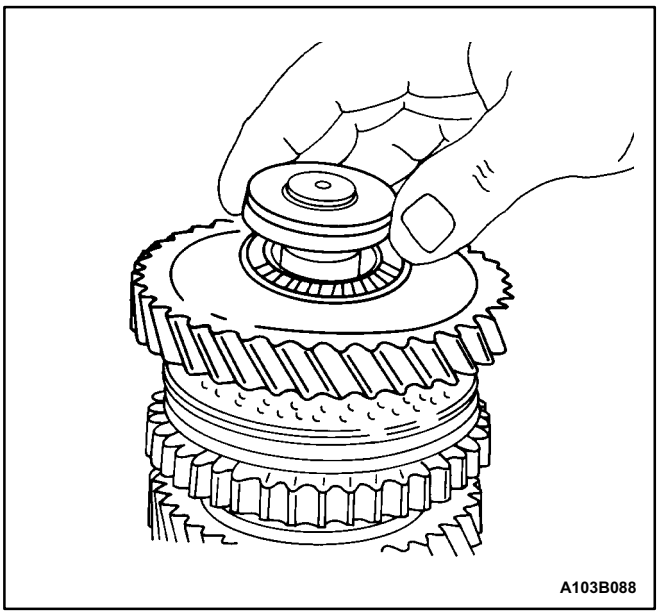

20. Install the outer blocking ring.
21. Install the mainshaft wear plate, the flat type firstgear needle bearing, and the first gear.

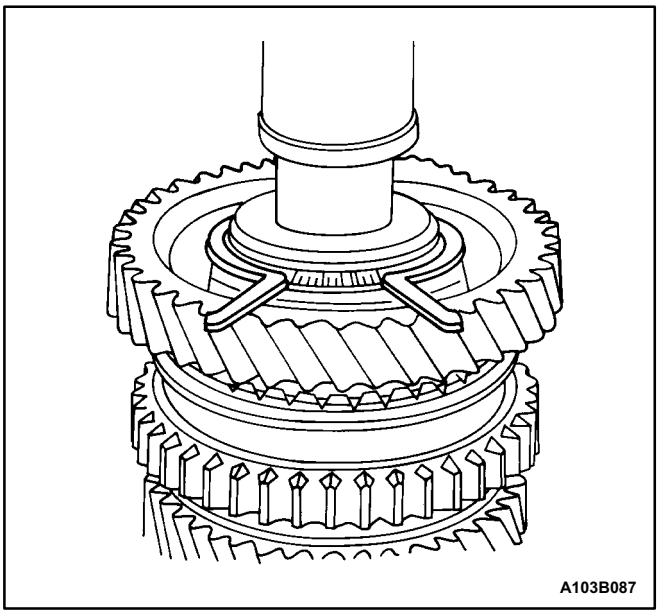

22. Install the snap ring.

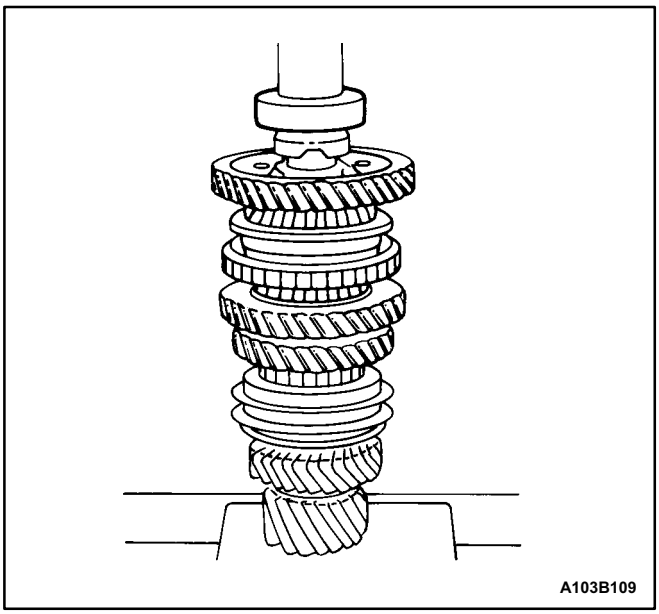

23. Press on the mainshaft bearing.

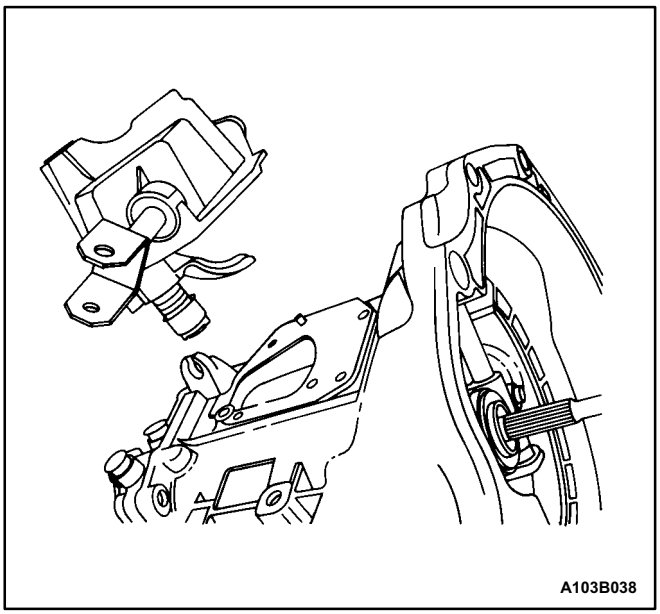

HOUSING CASE

Disassembly Procedure

1. Remove the transaxle from the vehicle. Refer to „Transaxle Assembly” in this section.
2. Remove the shift lever cover bolts and the shift lever cover. Do not disassemble the shift lever cover.

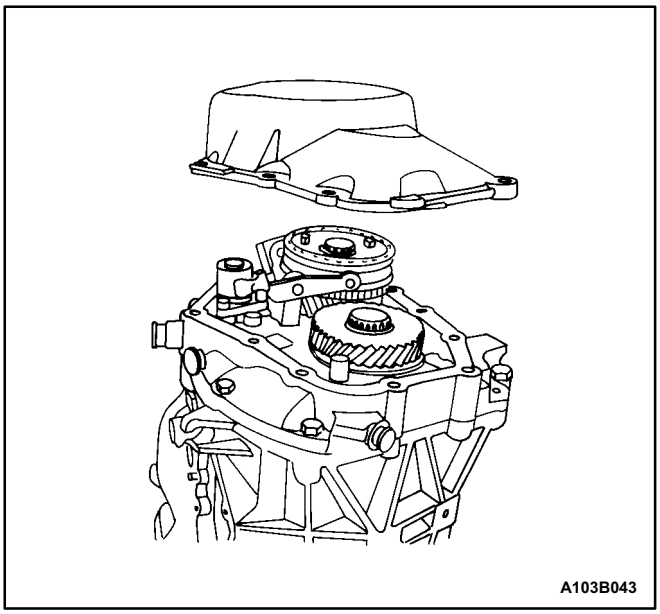

3. Remove the transaxle cover bolts and the transaxle cover.

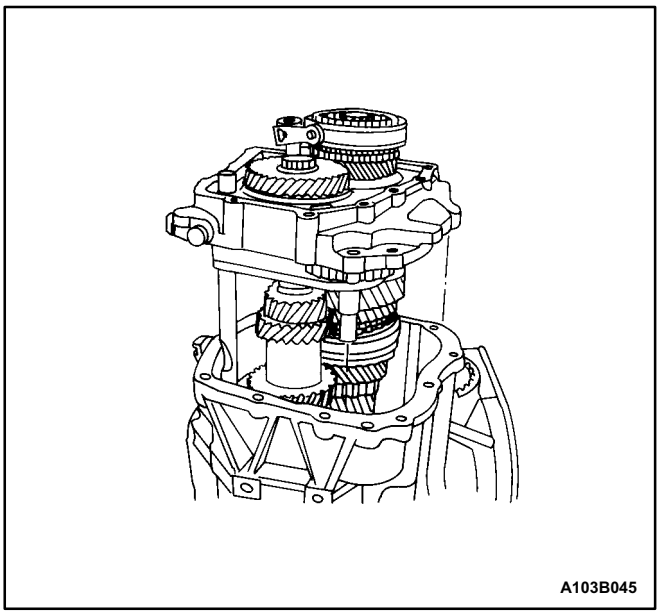

4. Remove the bearing plate bolts and the bearing plate, with the shafts attached. Do not disassemble the shafts.

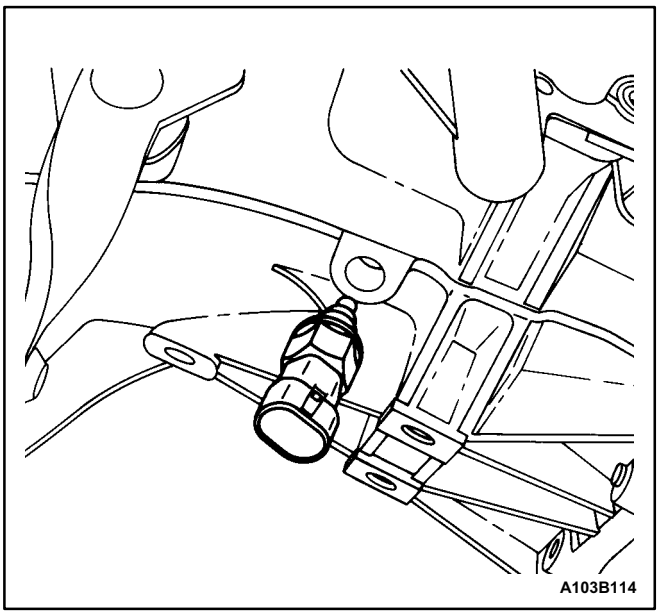

5. Remove the differential from the transaxle housing. Do not disassemble the differential. Refer to „Differential" in this section.
6. Remove the backup lamp switch from the transaxle housing.

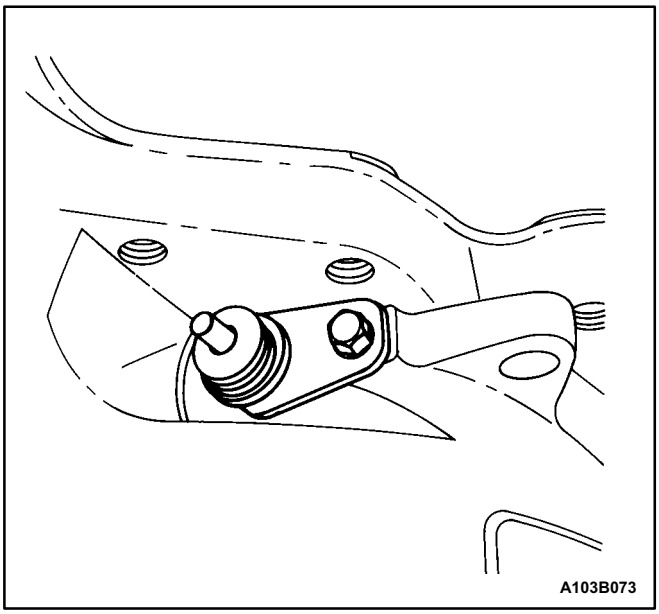

7. Remove the clutch release bearing and the clutch release bearing guide. Refer to *Section 5C, Clutch*.
8. Remove the speedometer driven gear bolt and the speedometer driven gear from the transaxle housing.

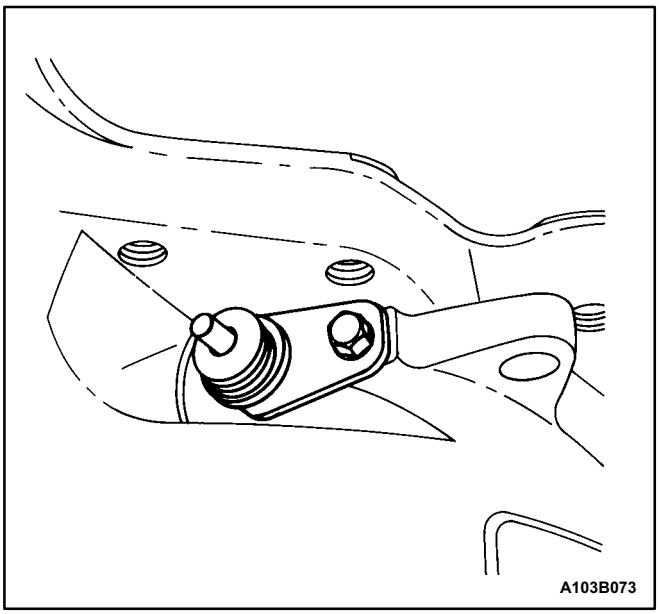

Assembly Procedure

1. Install the speedometer driven gear bolt and the speedometer driven gear into the transaxle housing.

Tighten

Tighten the speedometer driven gear bolt to 5 N•m (44 lb•in).

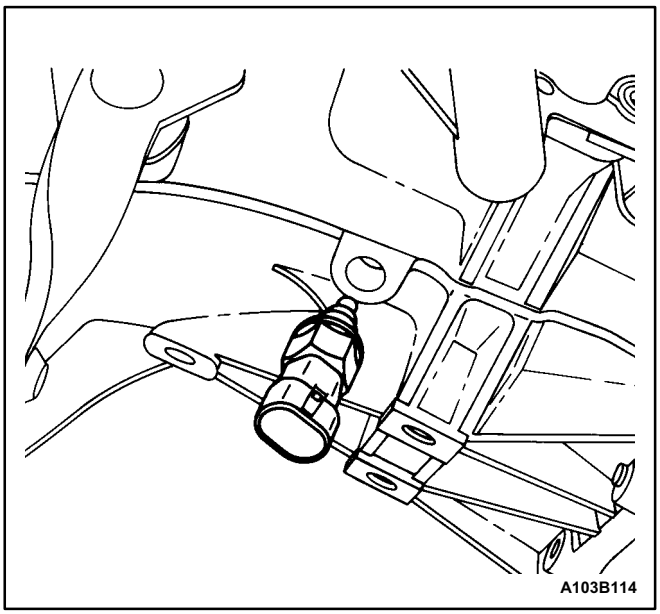

2. Install the clutch release bearing guide and the clutch release bearing. Refer to *Section 5C, Clutch*.
3. Install the backup lamp switch into the transaxle housing.

Tighten

Tighten the backup lamp switch to 20 N•m (15 lb•ft).

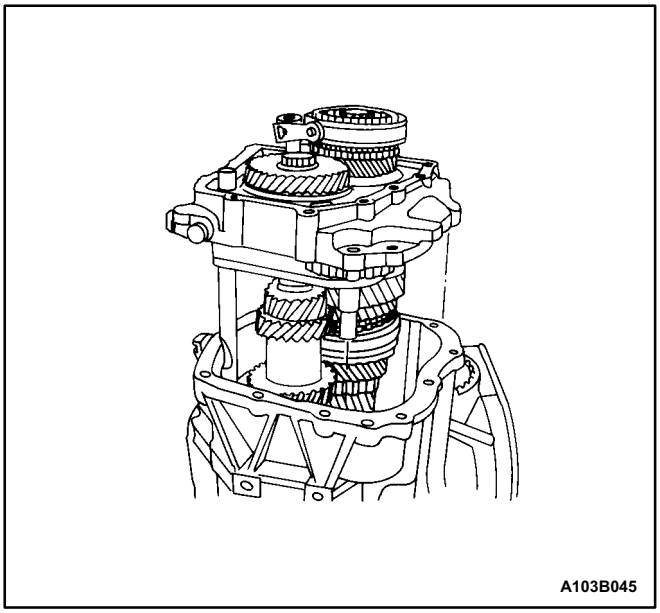

4. Install the differential into the transaxle housing. Refer to „Differential" in this section.
5. Install the bearing plate, with the shafts attached.
6. Install the bearing plate bolts.

Tighten

Tighten the bearing plate bolts to 22 N•m (16 lb•ft).

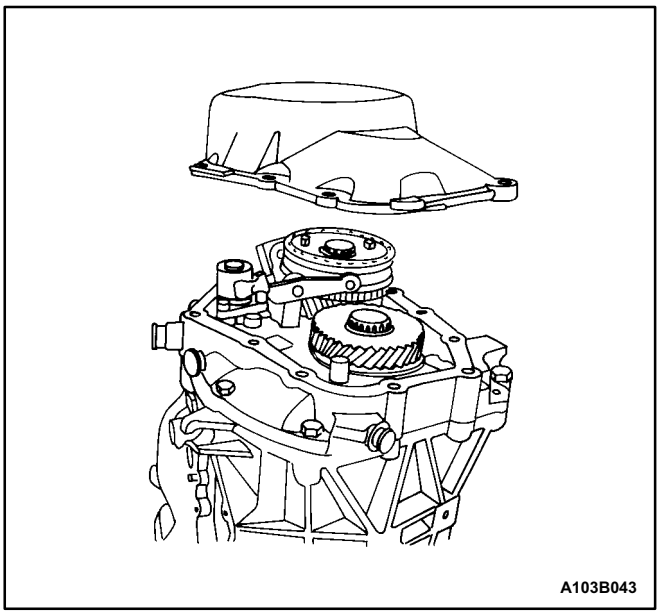

7. Install the transaxle cover and the transaxle cover bolts.

Tighten

Tighten the bigger transaxle cover bolts to 20 N•m (15 lb•ft) and the smaller transaxle cover bolts to 15 N•m (11 lb•ft).

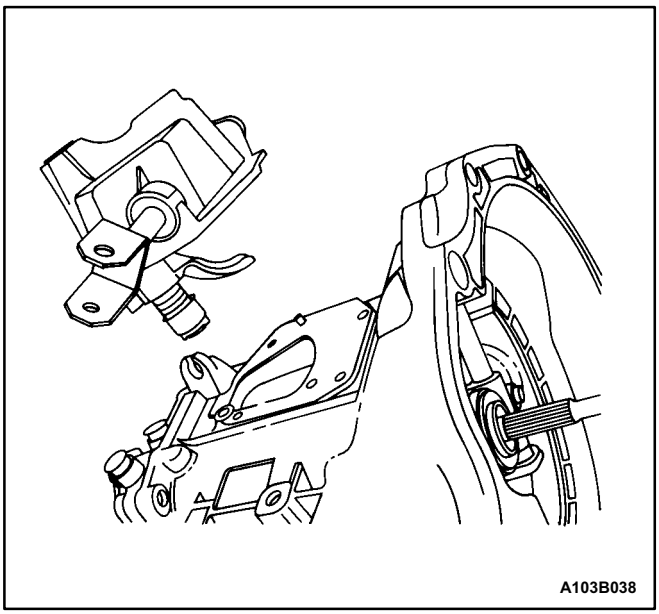

8. Install the gearshift lever cover and the gearshift lever cover bolts.

Tighten

Tighten the gearshift lever cover bolts to 22 N•m (16 lb•ft).

9. Install the transaxle into the vehicle. Refer to „Transaxle Assembly" in this section.

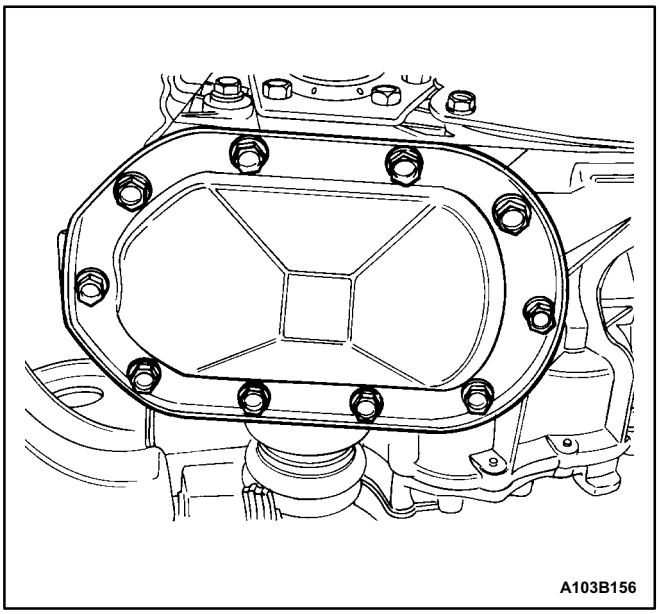

DIFFERENTIAL

Tools Required

KM-520 Remover/Installer

KM-525 Installer

J-22888-20-A Bearing Puller with J-22888-35 Puller Legs

KM-522 Installer

Disassembly Procedure

1. Remove the differential cover bolts, the differential cover, and the differential cover gasket.

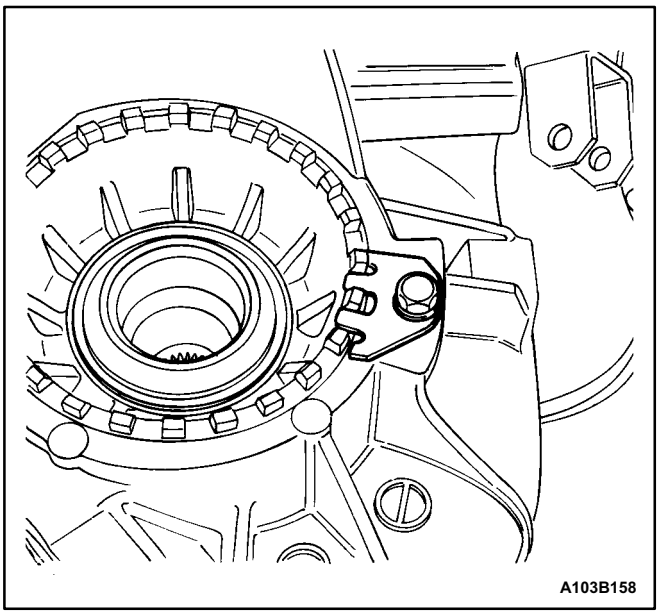

2. Remove the bearingādjusting ring retainer plate bolt and the bearingādjusting ring retainer plate.

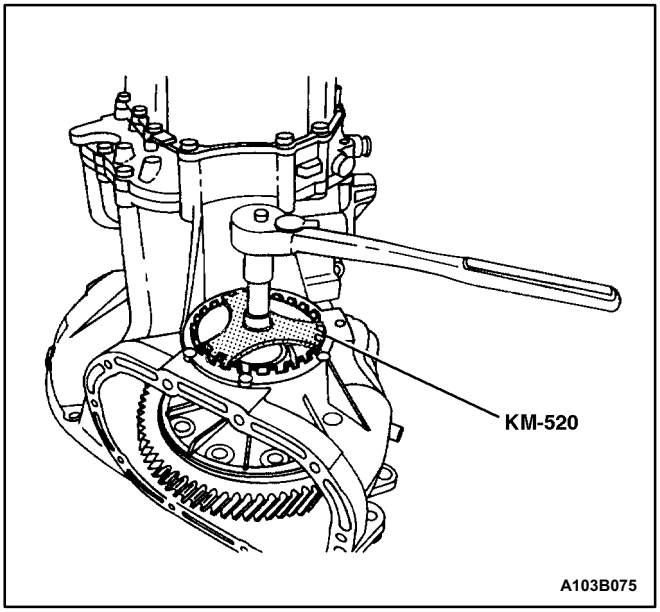

3. Remove the bearing adjusting ring using the remover/installer KM-520.

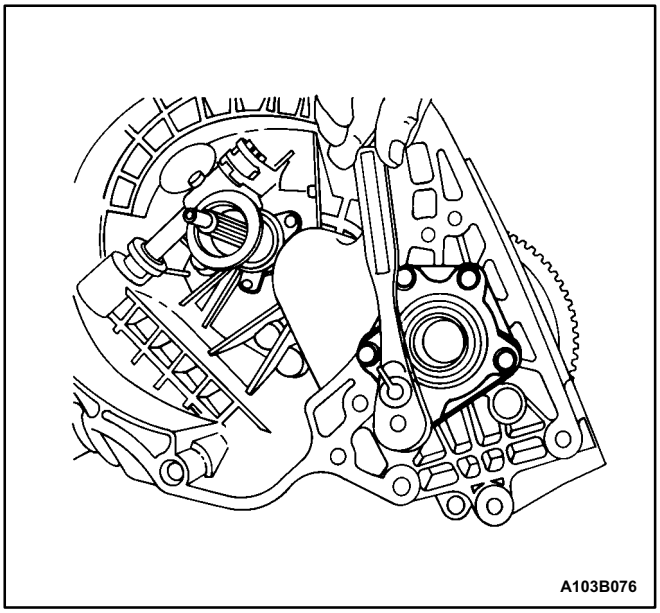

4. Remove the right side bearing retainer bolts and the right side bearing retainer.

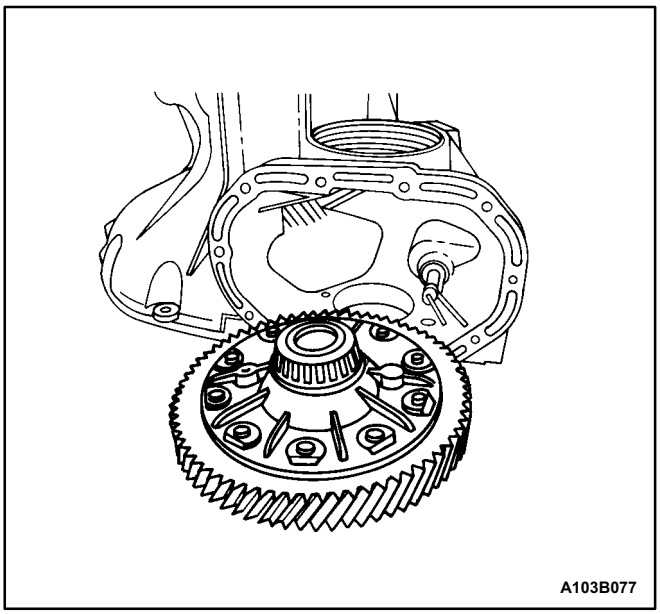

5. Remove the differential assembly from the transaxle case.

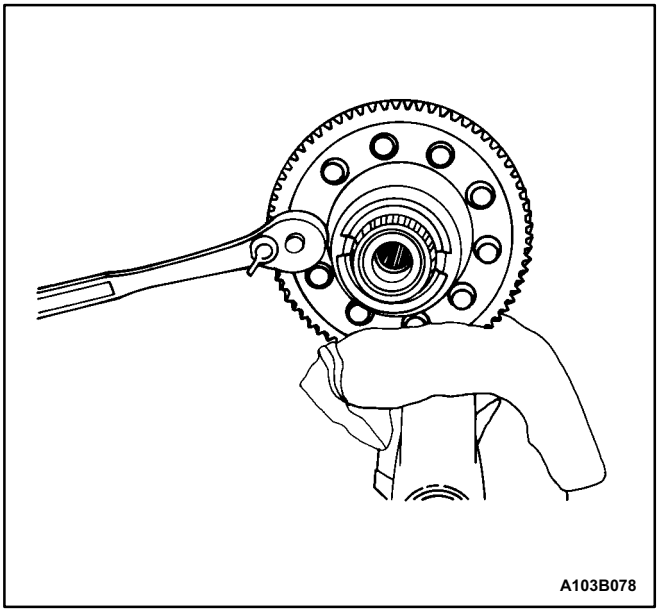

6. Remove the ring gear bolts.

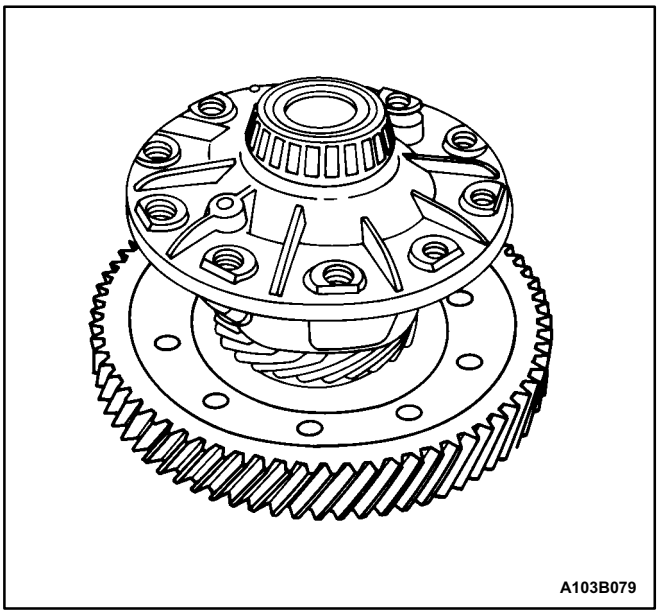

7. Separate the ring gear from the differential housing.

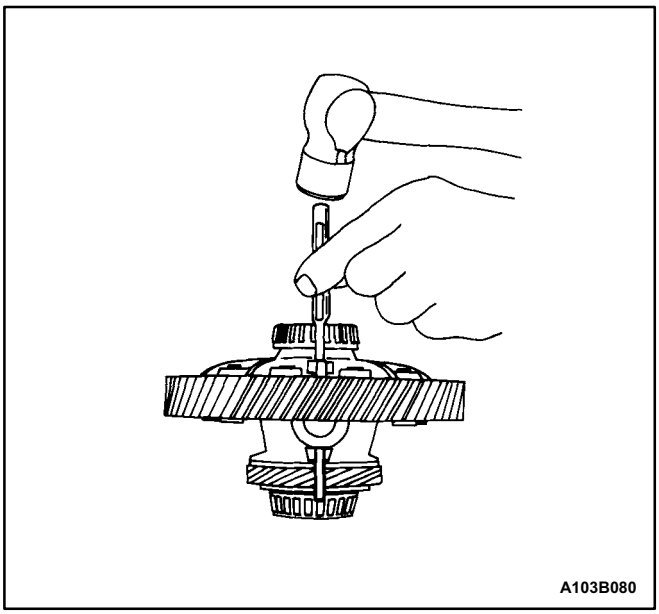

8. Drive the pinion gear shaft lock pin from the differential housing and the pinion gear shaft.

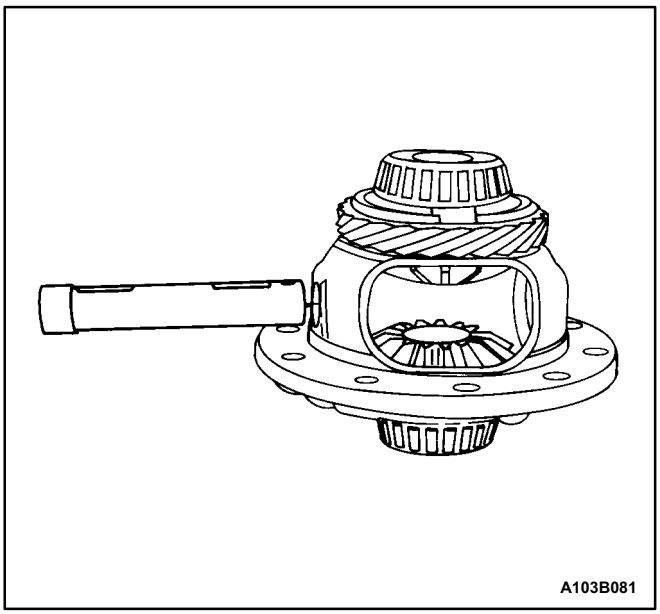

9. Remove the pinion gear shaft.

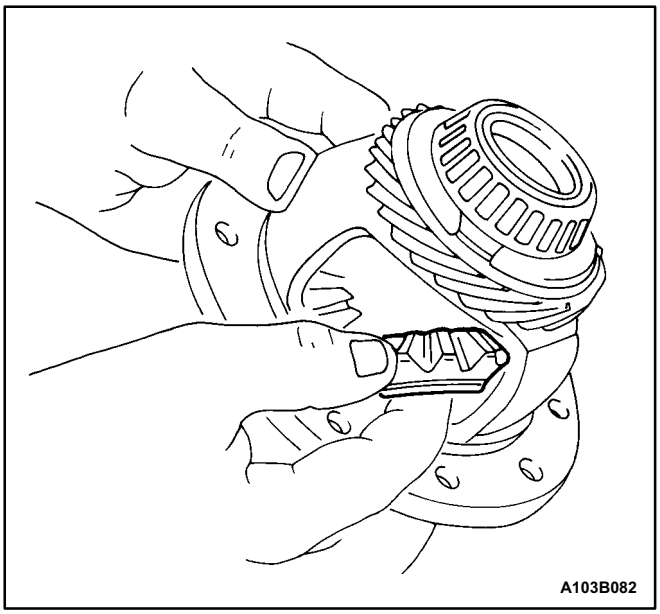

10. Remove the pinion gears and the washers.
11. Remove the side gears and the side thrust washers.

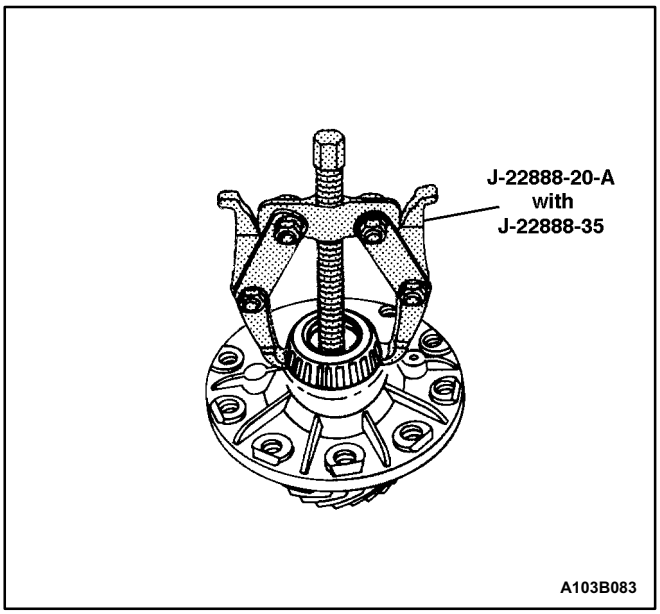

12. Remove both of the differential bearings using the bearing puller J-22888-20-A with the puller legs J-22888-35.

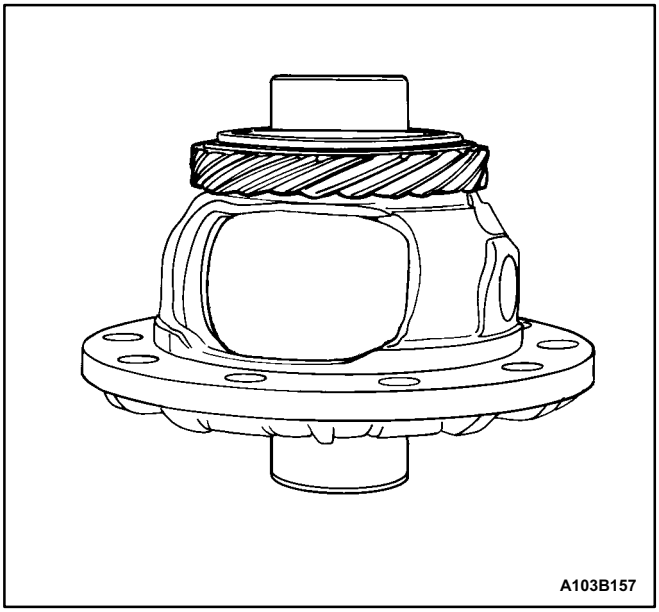

13. Remove the speedometer drive gear from the differential gear housing.

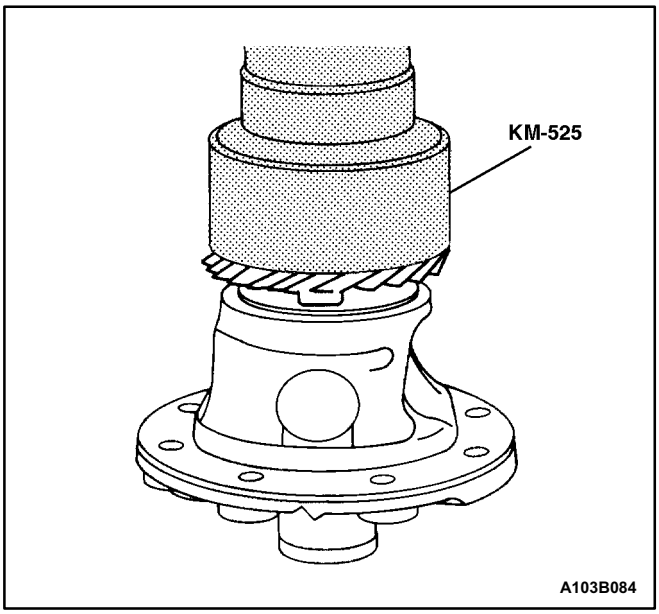

Assembly Procedure

1. Install the speedometer drive gear onto the differential gear housing using the installer KM-525.

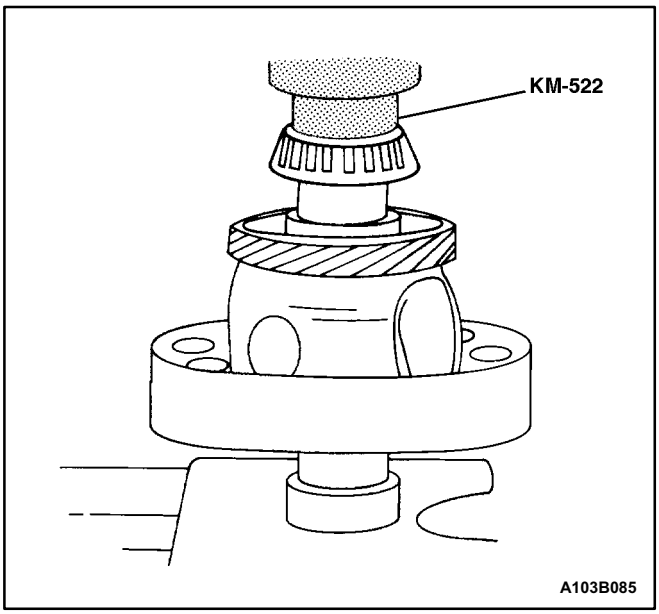

2. Install both of the differential bearings using the installer KM-522.

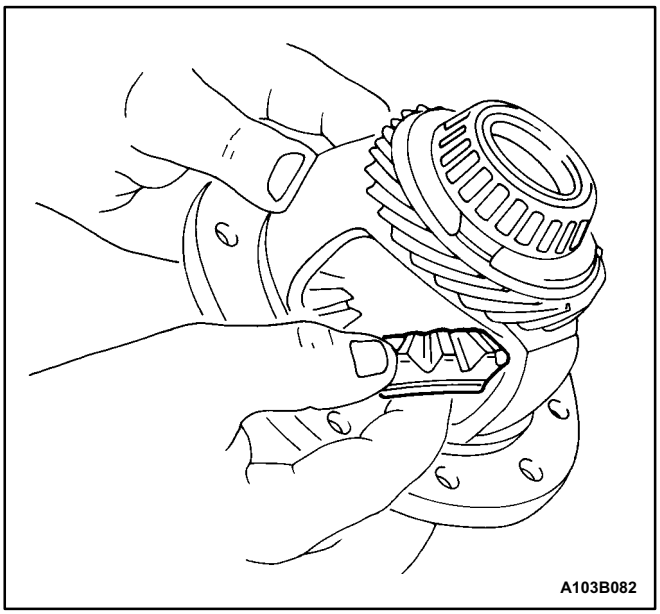

3. Install the side gears and the side thrust washers into the differential housing.
4. Install the differential pinion gears and the differential pinion gear washers into the differential housing.

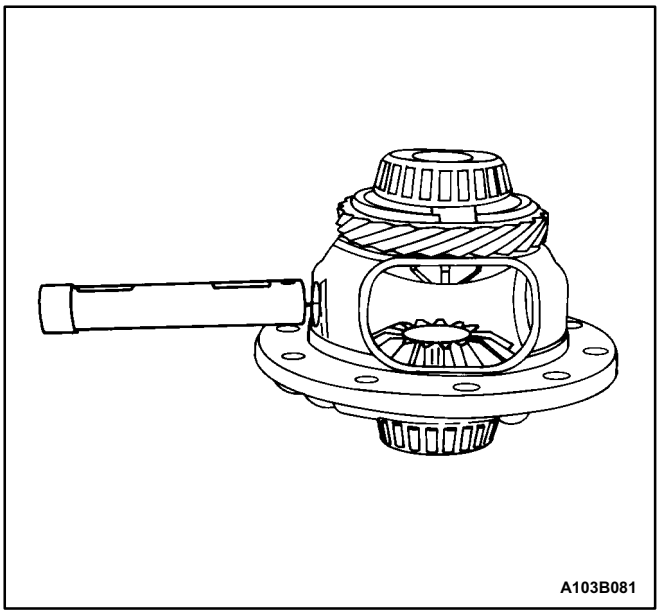

5. Install the pinion gear shaft into the differential housing.

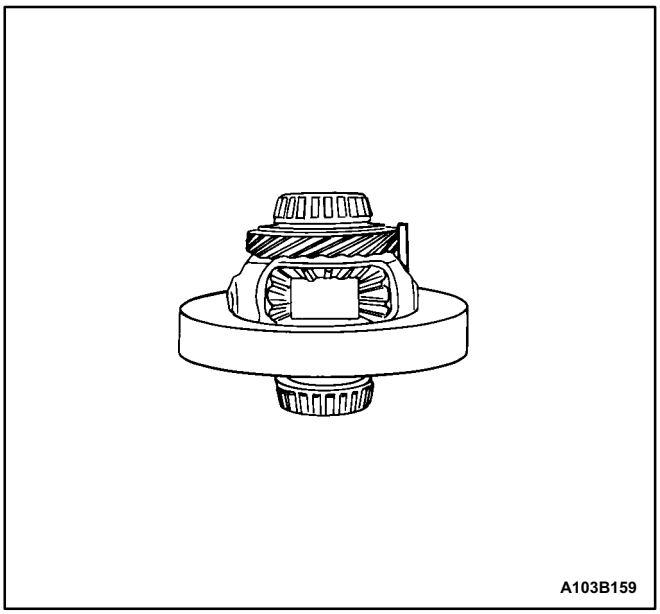

6. Install the pinion gear shaft lock pin into the differential housing and the pinion gear shaft.

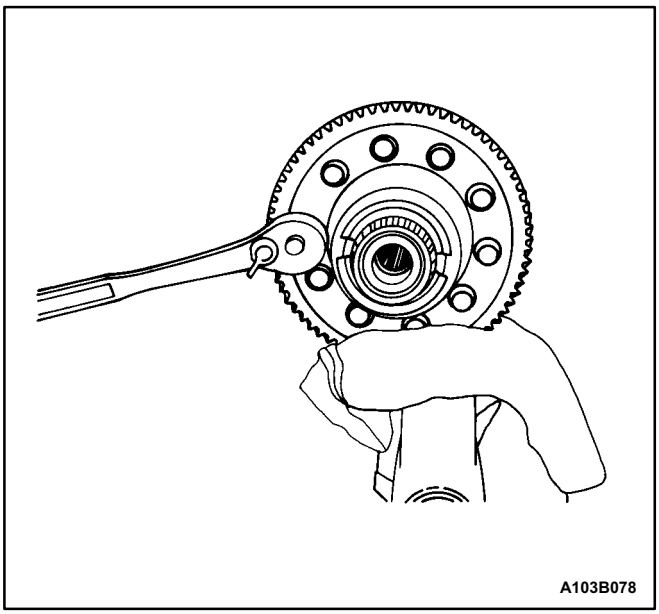

7. Install the ring gear and the ring gear bolts.

Tighten

Tighten the ring gear bolts to 70 N•m (52 lb•ft).

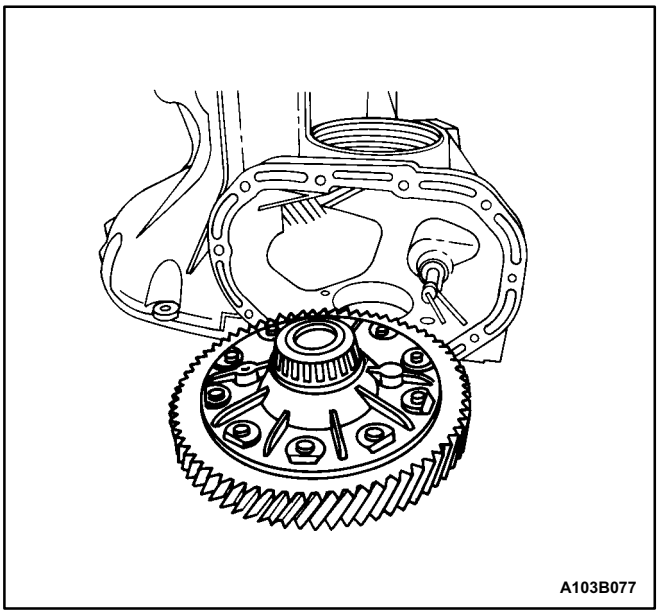

8. Install the differential assembly into the transaxle case.

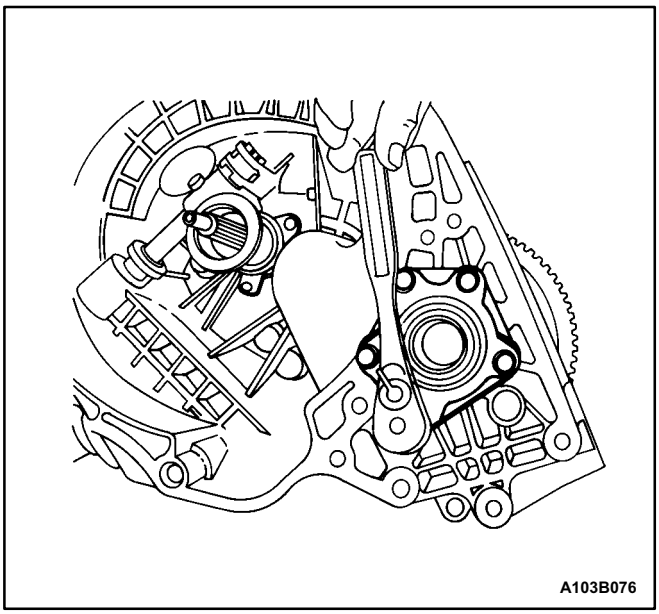

9. Install the right side bearing retainer and the rightside bearing retainer bolts.

Tighten

Tighten the right side bearing retainer bolts to 25 N•m (18 lb•ft).

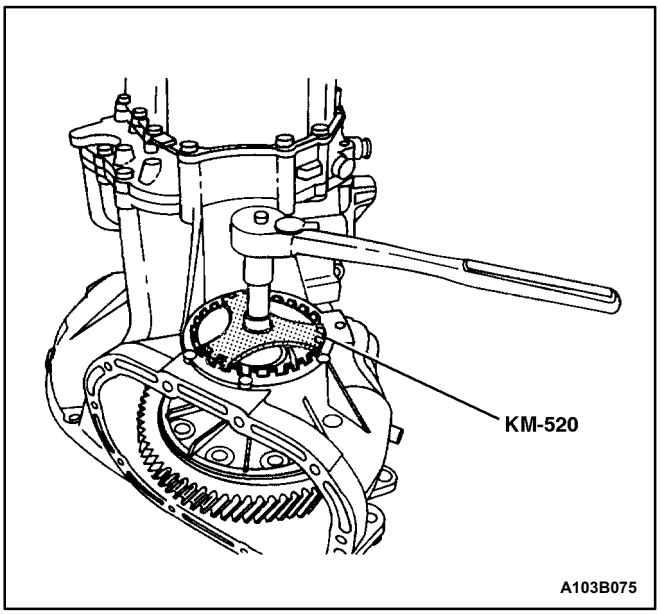

10. Install the bearing adjusting ring.
11. Tighten the bearing adjusting ring using the remover/installer KM-520.

Tighten

Tighten the bearing adjusting ring until there is no end play with the differential.

Adjust the preload on the differential bearings.

Used Bearings:
1 N•m (9 lb•in) required to rotate the differential one revolution per second.

New Bearings:
2 N•m (18 lb•in) required to rotate the differential one revolution per second.
Tighten or loosen the bearing ring adjuster to get the required preload on the bearings.

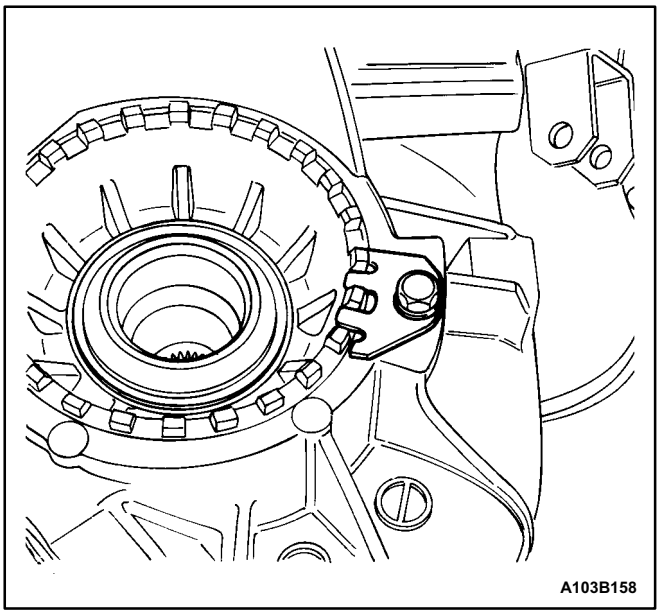

12. Install the bearing adjusting ring retainer plate and the bearing adjusting ring retainer plate bolt.

Tighten

Tighten the bearing adjusting ring retainer plate bolt to 25 N•m (18 lb•ft).

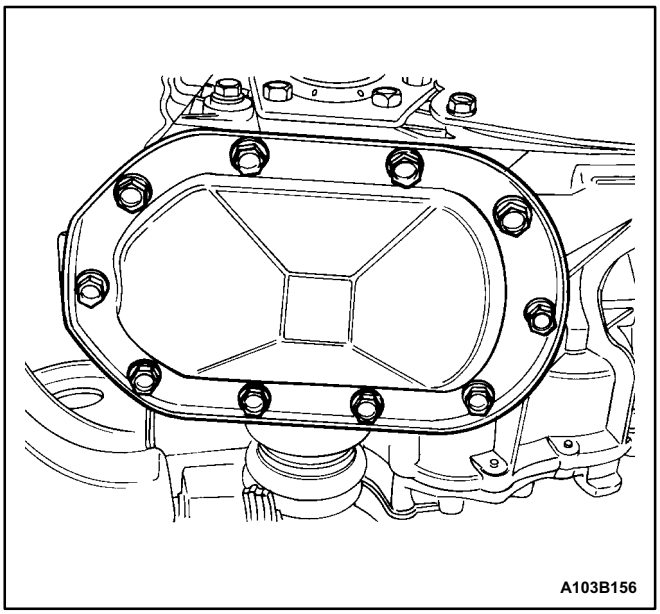

13. Install the differential cover gasket, the differential cover, and the differential cover bolts.

Tighten

Tighten the differential cover bolts to 40 N•m (30 lb•ft).

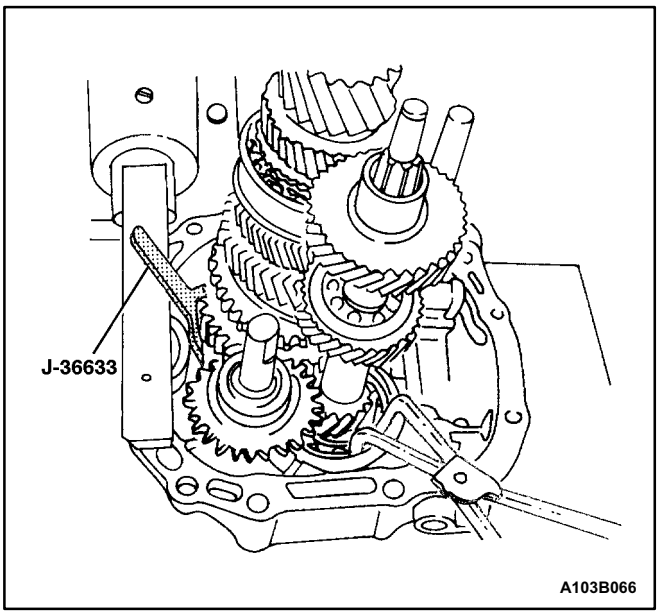

MAJOR COMPONENT ASSEMBLY

Tools Required

J-36633 Snap Ring Retainer
KM-334 Installer Sleeve
KM-552 Fixture
KM-554 Installer
KM-113-2 Base

Assembly Procedure

1. Join the mainshaft and the input shaft.
2. Compress the snap ring at the base of the mainshaft and hold with the snap ring retainer J-36633.
3. Hold the snap ring at the base of the input driveshaft with the snap ring pliers.
4. Install the mainshaft/input shaft assembly onto the bearing plate.
5. Release the mainshaft snap ring and the input shaft snap ring.

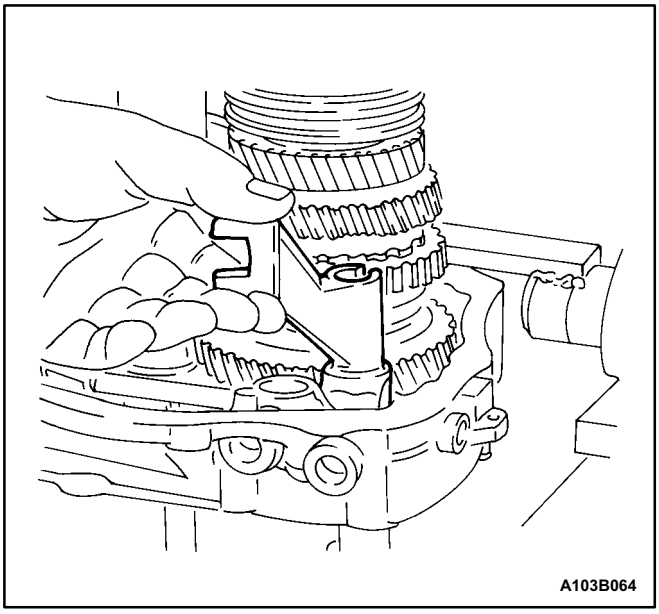

6. Position the first-second gearshift fork.
7. Install the fifth gearshift lever into the bearing plate.

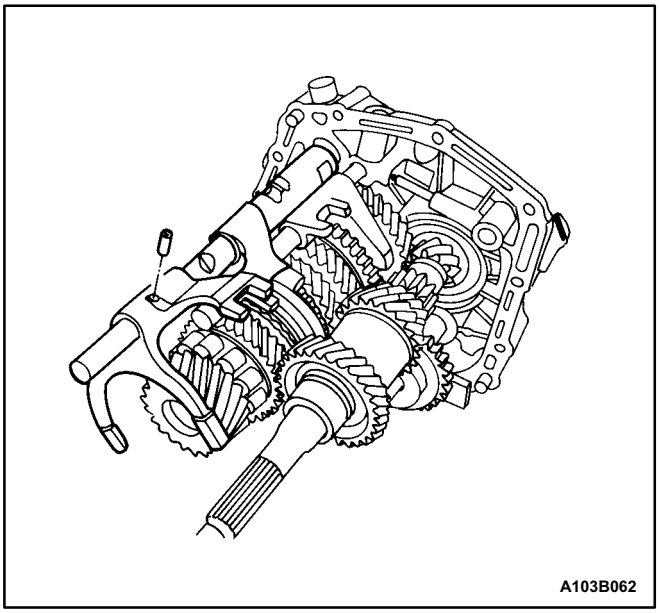

8. Install the third-fourth gearshift rod/fork holding pin.

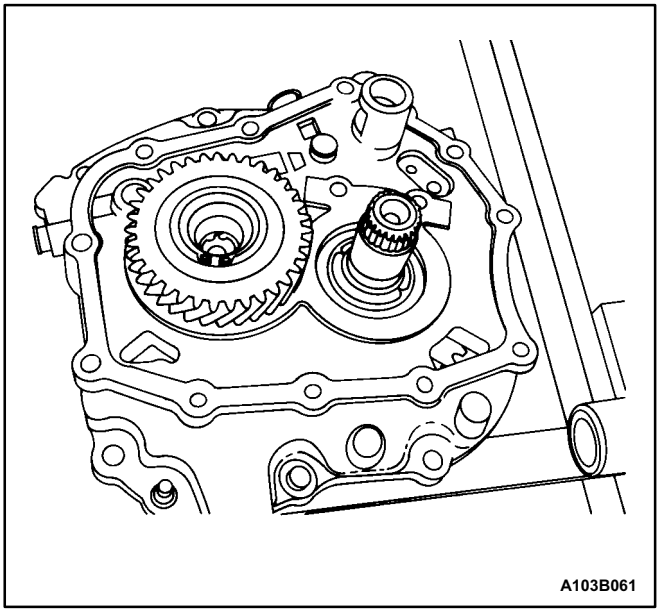

9. Install the support bracket onto the bearing plate.

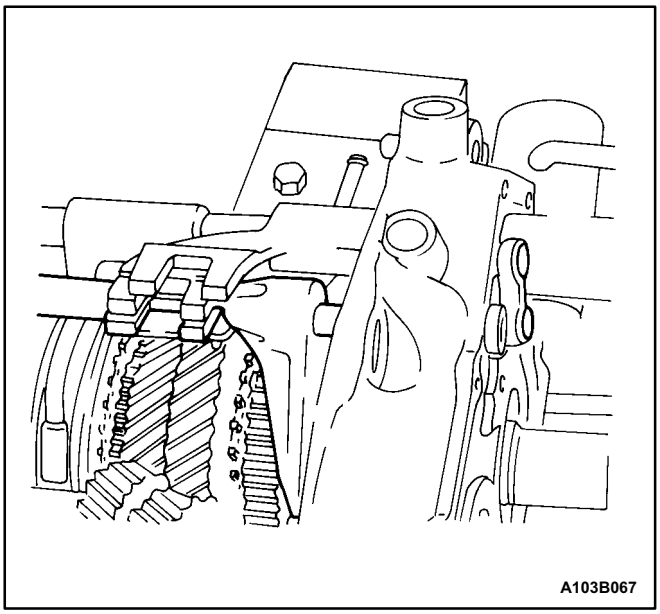

10. Install the first-second gearshift rod/fork onto the bearing plate.

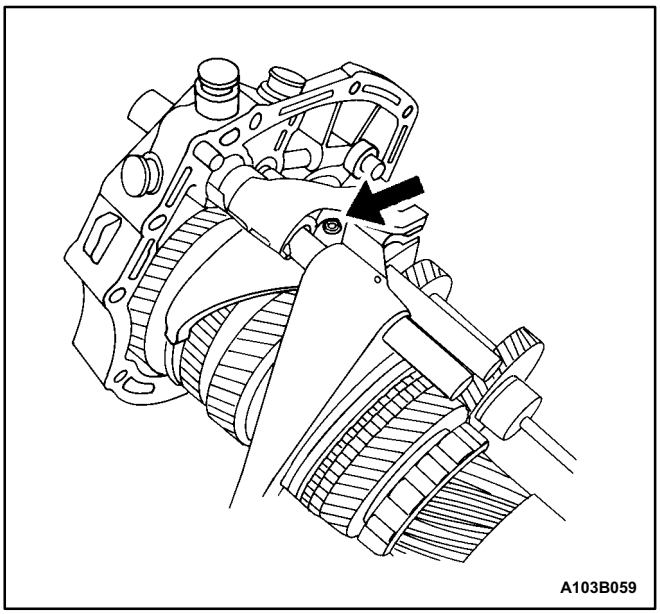

11. Install the first-second gearshift fork holding pin.

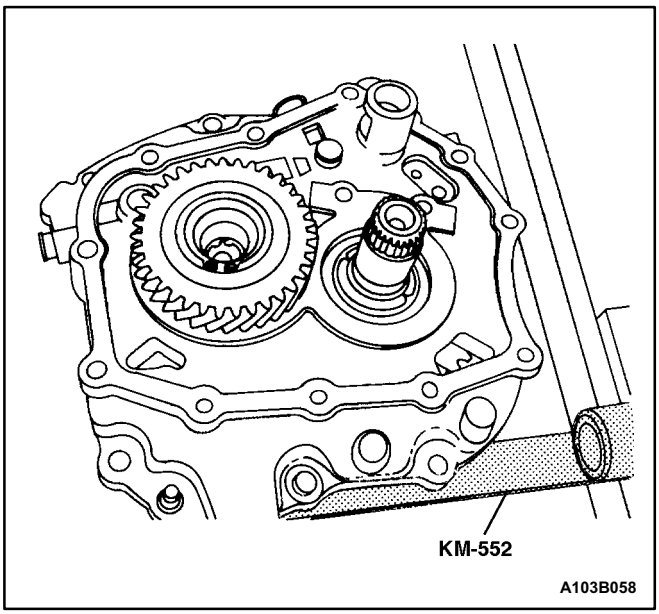

12. Install the support bracket bolts.

Tighten

Tighten the support bracket bolts to 7 N•m (62 lb•in).

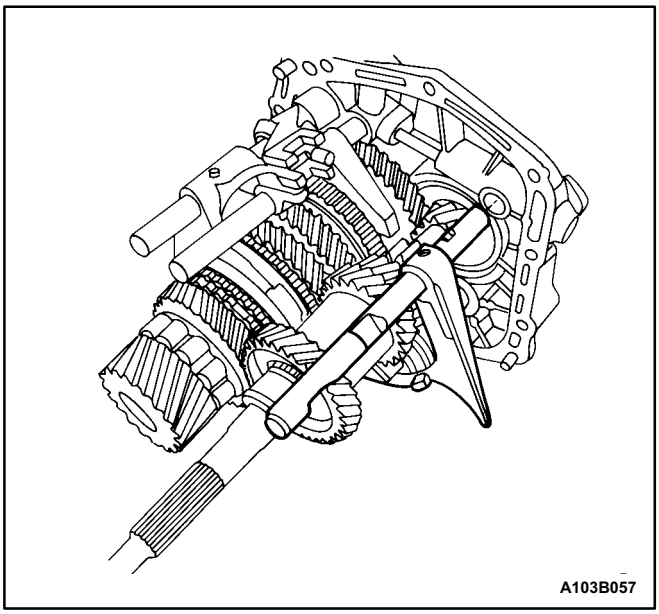

13. Install the reverse gearshift rod/fork onto the bearing plate.

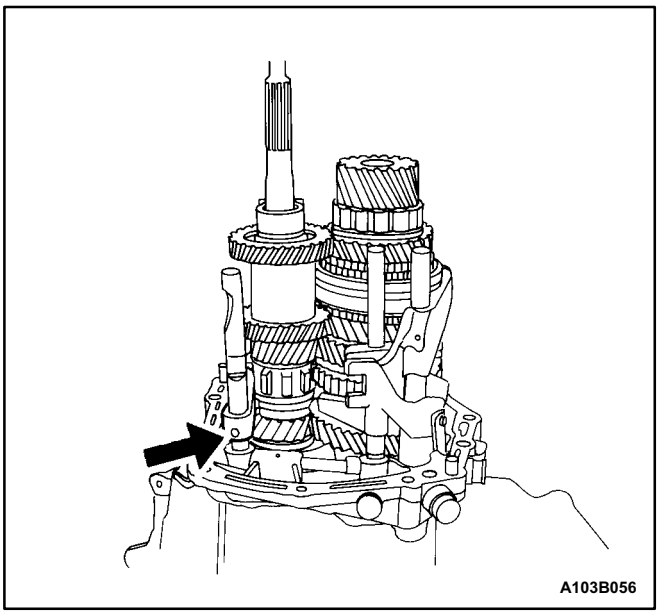

14. Install the reverse gearshift rod/fork holding pin.

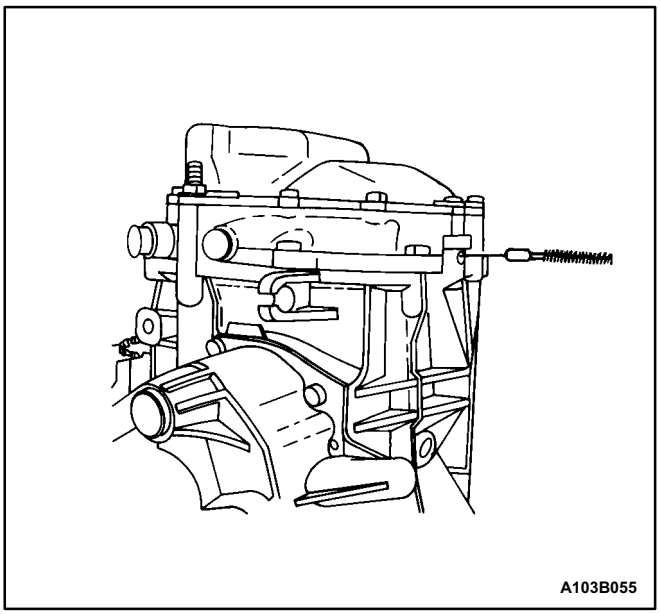

15. Install the rod lock pin and spring into the small plug hole.

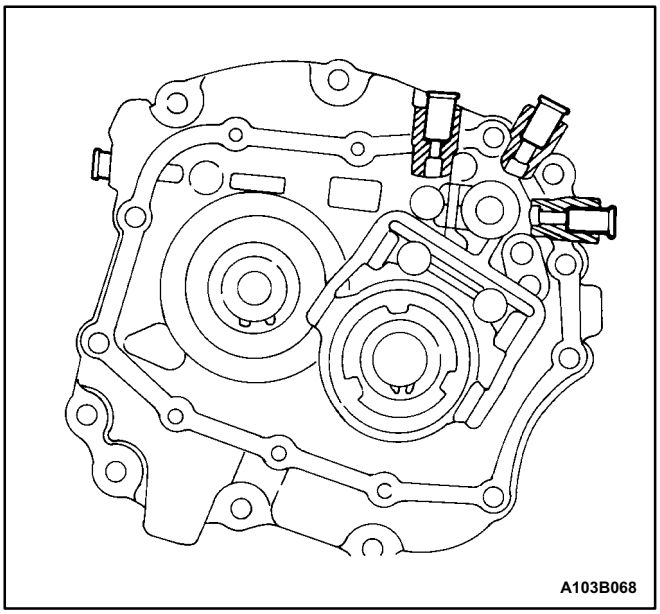

16. Install the fourth gearshift rod plugs.

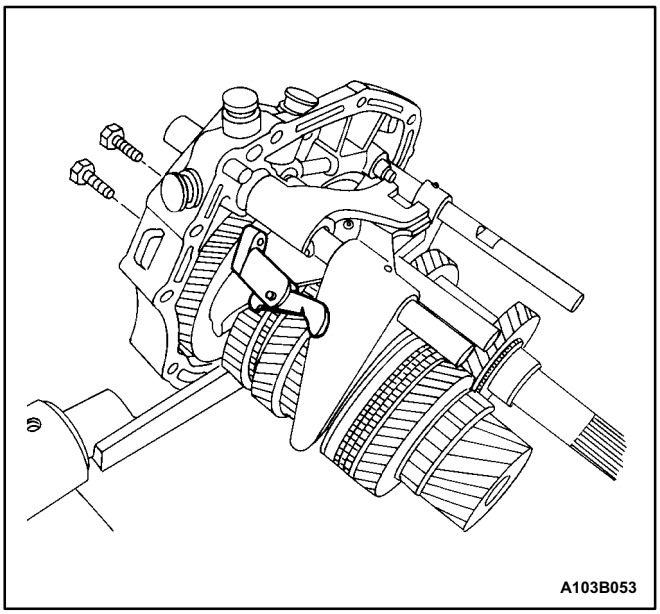

17. Install the bolts and the fifth gearshift connector onto the bearing plate, using the pawl.

Tighten

Tighten the fifth gearshift connector bolts to 7 N•m (62 lb•in).

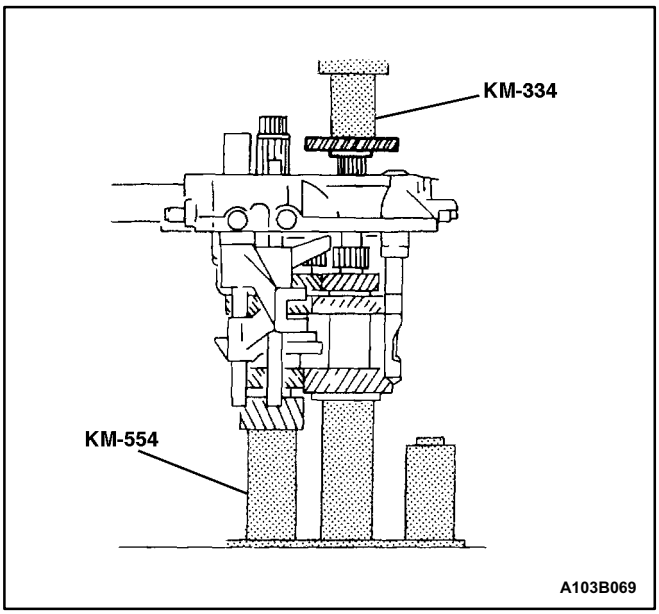

18. Install the input drive fifth gear using the installer KM-554 and the installer sleeve KM-334.

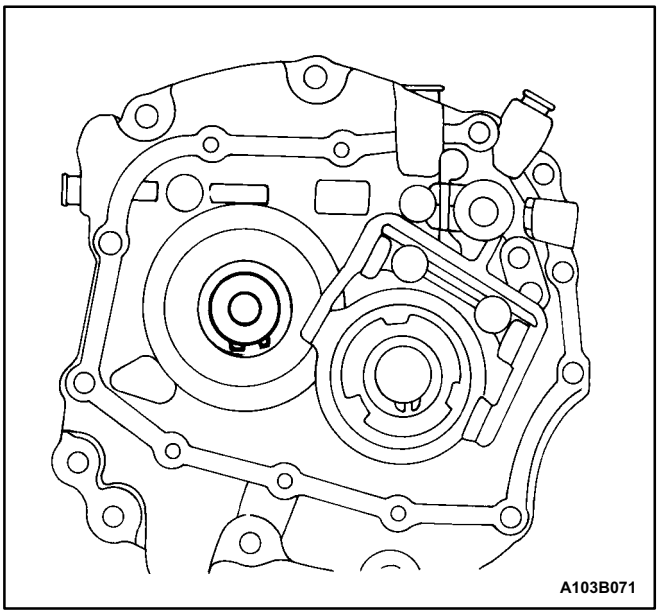

19. Install the snap rings securing the fifth drive gear.

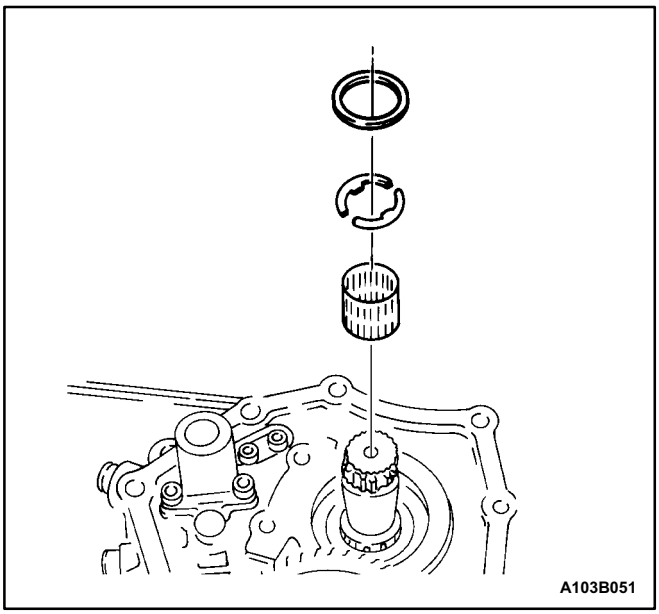

20. Install the thrust washers, the retaining ring, and the needle bearing into the mainshaft driven fifth gear assembly.

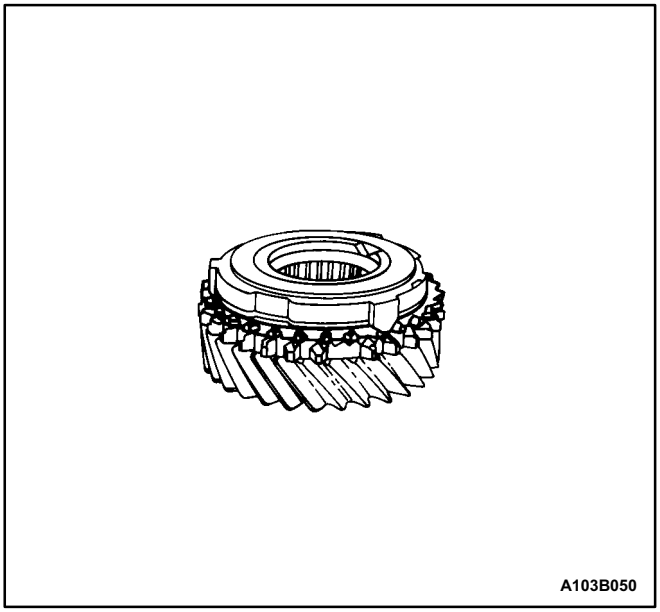

21. Install the brass synchronizer ring onto the mainshaft driven fifth gear assembly.

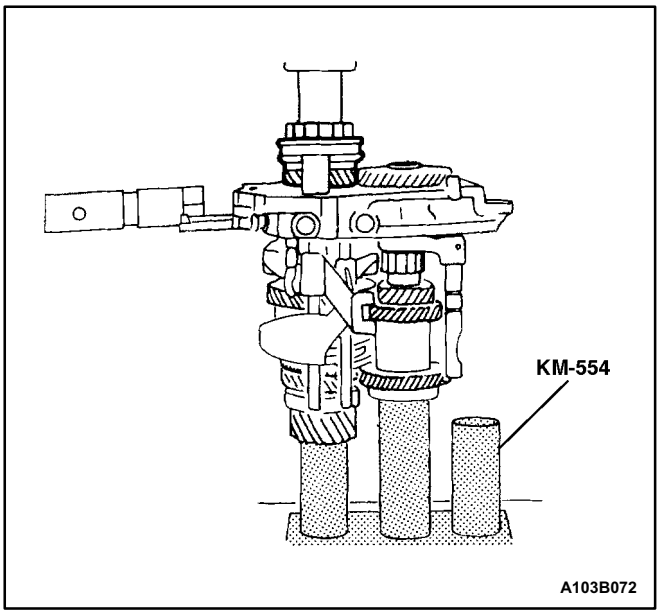

22. Install the mainshaft driven fifth gear assembly.
23. Install the fifth drive gear synchronizer gear and the synchronizer sleeve using installer KM-554.

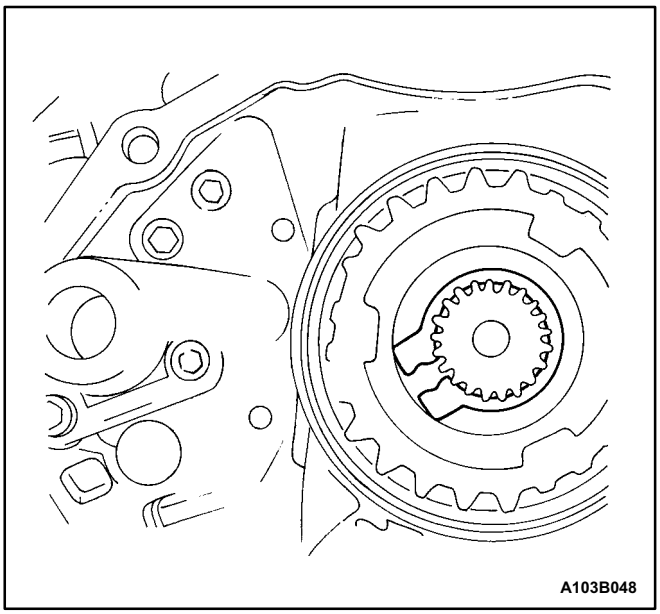

24. Install the snap ring that holds the fifth speed driven assembly.

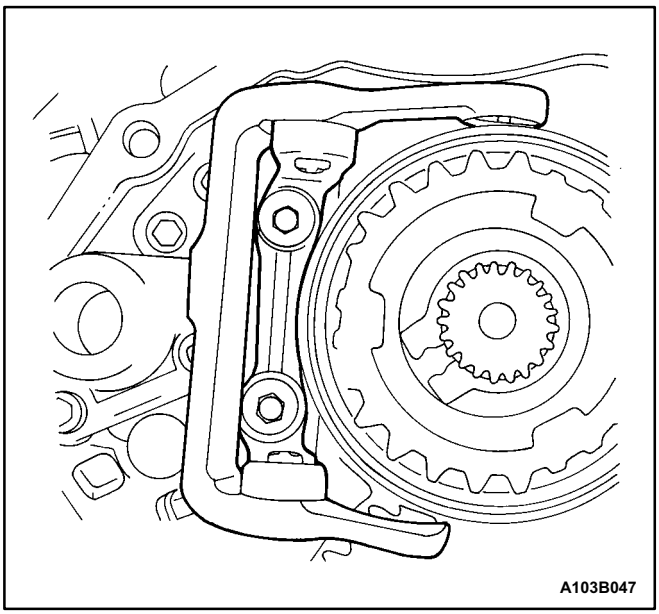

25. Install the bolts and the fifth-gear fork onto the bearing plate.

Tighten

Tighten the fifth-gear fork bolts to 22 N•m (16 lb•ft).

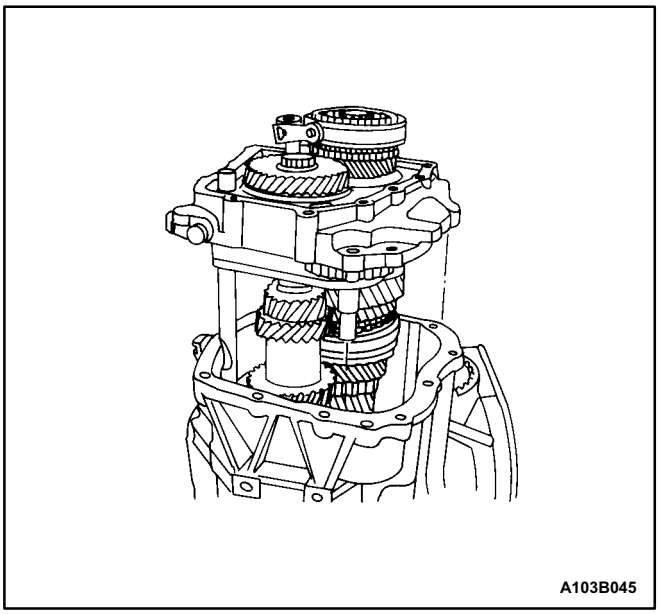

26. Remove the bearing plate from the fixture KM-552.
27. Shift the transaxle into second gear.
28. Install the bearing plate, with the shafts attached, into the case.

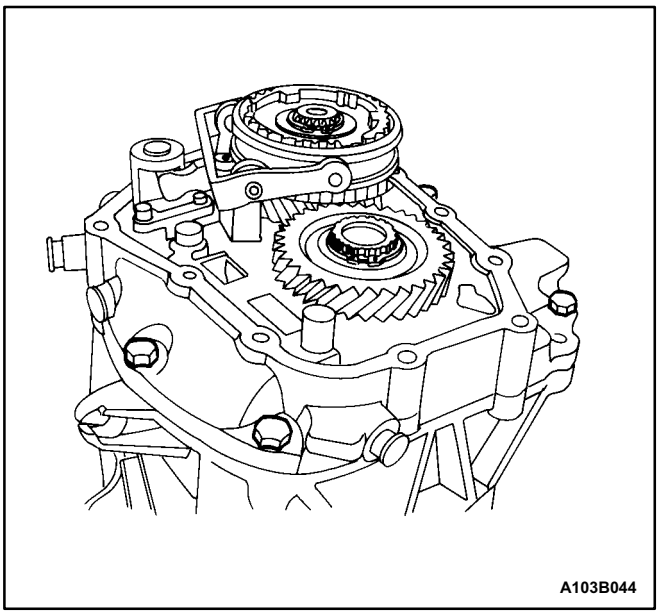

29. Install the bearing plate bolts.

Tighten

Tighten the bearing plate bolts to 22 N•m (16 lb•ft).

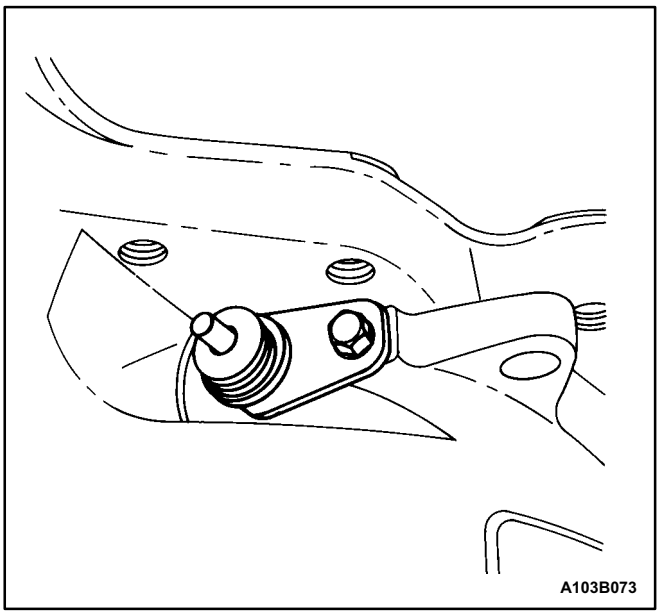

30. Install the speedometer driven gear and the speedometer housing retaining bolt into the transaxle housing.

Tighten

Tighten the speedometer housing retaining bolt to 4 N•m (35 lb•in).

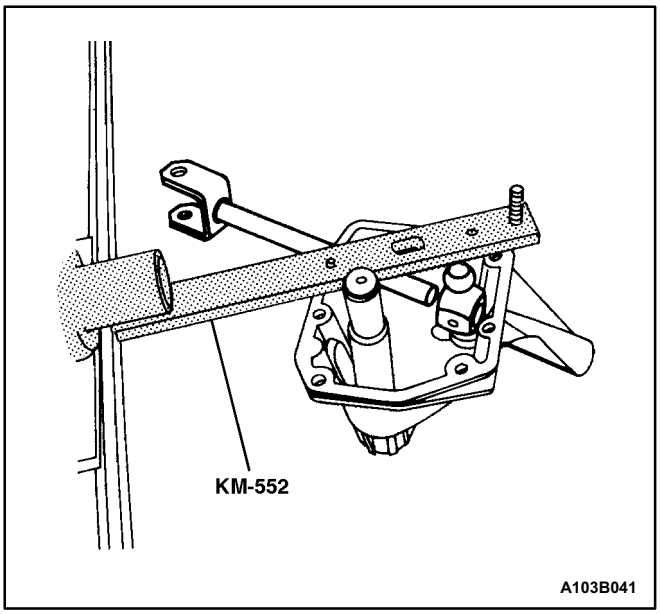

31. Bolt the gearshift lever cover to the fixture KM-552.
32. Position the fixture into the base KM-113-2.
33. Install the gearshift rod, the shift finger lever, and the gearshift lever pin.

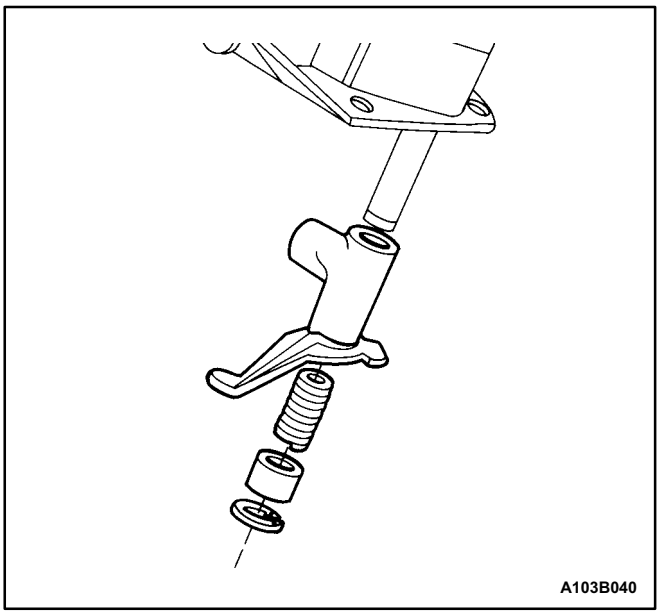

34. Install the snap ring, the bushing, the spring, and the intermediate lever.
35. Remove the gearshift lever cover from the base KM-113-2 and the fixture KM-552.
36. Shift the transaxle into NEUTRAL.

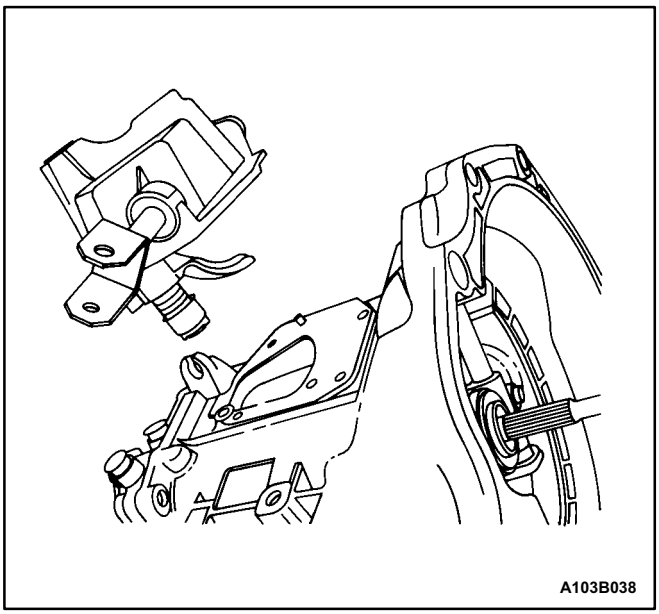

37. Install the gearshift lever cover and the gearshift lever cover bolts.

Tighten

Tighten the gearshift lever cover bolts to 22 N•m (16 lb•ft).

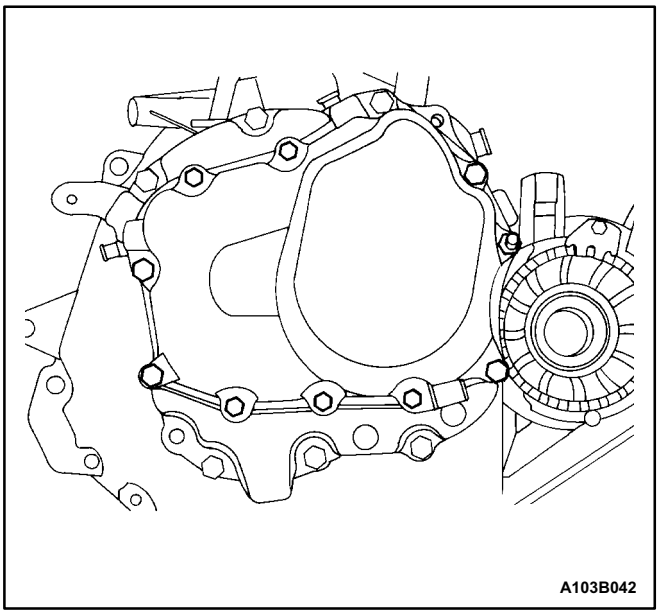

38. Install the transaxle cover and the transaxle cover bolts.

Tighten

Tighten the bigger transaxle cover bolts to 20 N•m (15 lb•ft) and the smaller transaxle cover bolts to 15 N•m (11 lb•ft).

39. Install the transaxle into the vehicle. Refer to „Transaxle Assembly" in this section.

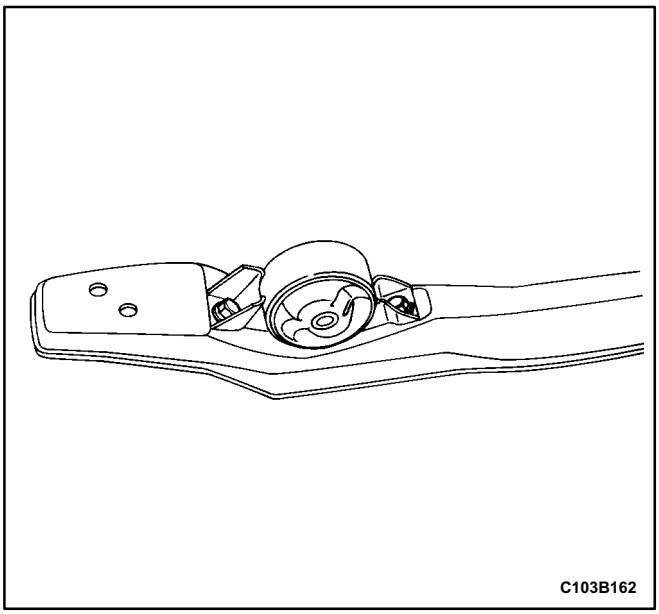

TRANSAXLE MOUNT

Disassembly Procedure

1. Remove the center member from the vehicle. Refer to *Section 9N, Frame and Underbody.*
2. Remove the transaxle bracket mount to center member bolts.
3. Remove the transaxle bracket mount.

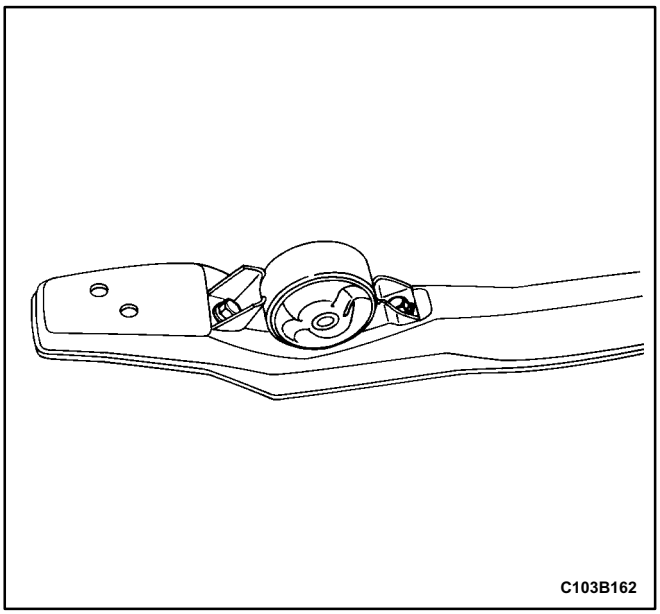

Assembly Procedure

1. Install the transaxle bracket mount.
2. Install the transaxle bracket mount to center member bolts.

   ### Tighten

   Tighten the transaxle bracket mount to center member bolts to 65 N•m (48 lb•ft).
3. Install the center member into the vehicle. Refer to *Section 9N, Frame and Underbody*.

GENERAL DESCRIPTION AND SYSTEM OPERATION

FIVE-SPEED MANUAL TRANSAXLE

This fivespeed transaxle assembly is a transmission of constantmesh design.

Combined in the assembly are

- All forward gears.
- The reverse gear.
- The differential output.

The basic components of the fivespeed transaxle assembly units are the

- Transaxle case.
- Input shaft.
- Input shaft gears.
- Output shaft.
- Output shaft gears.
- Ring gear and differential assembly.

Forward Gear

Shifting to a forward gear is accomplished through a combination of synchronizers with blocker rings controlled by sliding shift forks.

Reverse Gear

Reverse gear is not synchronized and uses a sliding idler gear arrangement.

Differential Assembly

The differential is a conventional arrangement of gears that is supported by tapered roller bearings. The final output gear turns the ring gear and differential assembly, which turns the drive axle shafts.

SECTION 5C

CLUTCH

CAUTION: Disconnect the negative battery cable before removing or installing any electrical unit or when a tool or equipment could easily come in contact with exposed electrical terminals. Disconnecting this cable will help prevent personal injury and damage to the vehicle. The ignition must also be in LOCK unless otherwise noted.

TABLE OF CONTENTS

Specifications 5C-1
Fastener Tightening Specifications 5C-1
Special Tools 5C-2
Special Tools Table 5C-2
Diagnosis 5C-2
Clutch Operation 5C-2
Component Locator 5C-4
Hydraulic Clutch Components 5C-4
Maintenance and Repair 5C-7
On-Vehicle Service 5C-7
Clutch Pedal 5C-7
Clutch Disc and Related Components 5C-9
Clutch Pedal Adjustment (Hydraulic) 5C-14
Clutch Release Point Adjustment (Hydraulic) 5C-16
Air Bleeding 5C-16
Clutch Master Cylinder Assembly 5C-16
Clutch Release Cylinder Assembly 5C-19
Unit Repair 5C-21
Clutch Master Cylinder 5C-21
Clutch Release Cylinder 5C-22
General Description and System Operation 5C-25
Driving Members 5C-25
Driven Members 5C-25
Operating Members 5C-25

SPECIFICATIONS

FASTENER TIGHTENING SPECIFICATIONS

Application	N•m	Lb•Ft	Lb•In
Clutch Fork to Release Lever Shaft Bolt	35	26	-
Clutch Master Cylinder Locknuts	22	18	-
Clutch Pedal Nut	18	13	-
Pressure Plate to Flywheel Bolts	15	11	-
Release Bearing Guide Sleeve Bolts	5	-	45
Release Cylinder Bolts	60	44	-

SPECIAL TOOLS

SPECIAL TOOLS TABLE

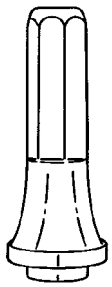 A103C009	**J-36547 Input Shaft Seal Installer**
A103C045	**J-42474 Clutch Arbor**

DIAGNOSIS

CLUTCH OPERATION

Fails to Release

Checks	Action
DEFINITION: When the pedal is pressed to the floor, the shift lever does not move freely in and out of reverse gear.	
Check for a loose linkage.	Repair or replace loose linkage, if necessary.
Check for a damaged clutch disc.	Replace the damaged clutch disc.
Check for an improperly installed fork shaft.	Remove and properly reinstall the fork shaft. Very lightly lubricate the fork fingers at the release bearing with wheel bearing grease.
Check for the clutch disc hub binding on the input shaft splines.	Repair or replace the clutch disc hub.
Check for a warped or bent clutch disc.	Replace the warped or bent clutch disc.

Slipping

Checks	Action
Check for the driver improperly operating the vehicle.	Correct the driver's operation of the vehicle as necessary.
Check for an oil soaked clutch disc.	Correct the leak at its source and install a new clutch disc.
Check for a worn facing or a facing torn from the disc.	Replace the worn disc with a new disc.
Check for a warped pressure plate or a warped flywheel.	Replace the warped pressure plate or the warped flywheel.
Check for a weak diaphragm spring.	Replace the pressure plate.
Check for a driven plate that is not seated.	Start the engine 30 to 40 times. Do not overheat the engine.
Check for a driven plate that is overheated.	Allow the driven plate to cool.

Grabbing (Chattering)

Checks	Action
Check for a burned or a glazed facing caused by oil on the facing.	Correct the leak at its source and install a new clutch disc.
Check for worn splines on the input shaft.	Replace the worn input shaft.
Check for a warped pressure plate or a warped flywheel.	Replace the warped pressure plate or the warped flywheel.
Check for burned or smeared resin on the flywheel or the pressure plate.	Sand off the burned or smeared resin if it is superficial. Replace any burned or heat-checked parts.

Rattling (Transaxle Click)

Checks	Action
Check for weak retracting springs.	Replace the pressure plate.
Check for a loose release fork.	Remove and reinstall the release fork properly.
Check for oil in the driven plate damper.	Correct the cause of the oil leak and replace the driven disc.
Check for a damaged driven plate damper spring.	Replace the driven disc.

Release Bearing Noise with Clutch Fully Engaged

Checks	Action
Check for the driver improperly operating the vehicle.	Correct the driver's operation of the vehicle as necessary.
Check for a binding release bearing.	Clean and relubricate the release bearing. Inspect the release bearing for burrs and nicks.
Check for an improperly installed release lever.	Remove and reinstall the release lever properly.
Check for a weak linkage return spring.	Replace the weak linkage return spring.

Noisy

Checks	Action
Check for a worn release bearing.	Replace the worn release bearing.
Check for an improperly installed release lever.	Remove and properly reinstall the fork shaft. Very lightly lubricate the fork fingers at the release bearing with wheel bearing grease.

Pedal Stays on Floor When Disengaged

Checks	Action
Check for binding in the linkage or the release bearing.	Lubricate and free up the binding linkage or the release bearing.
Check for weak pressure plate springs.	Replace the pressure plate.

Hard Pedal Effort

Checks	Action
Check for binding in the linkage.	Lubricate and free up the binding linkage.
Check for a worn driven plate.	Replace the worn driven plate.

COMPONENT LOCATOR

HYDRAULIC CLUTCH COMPONENTS

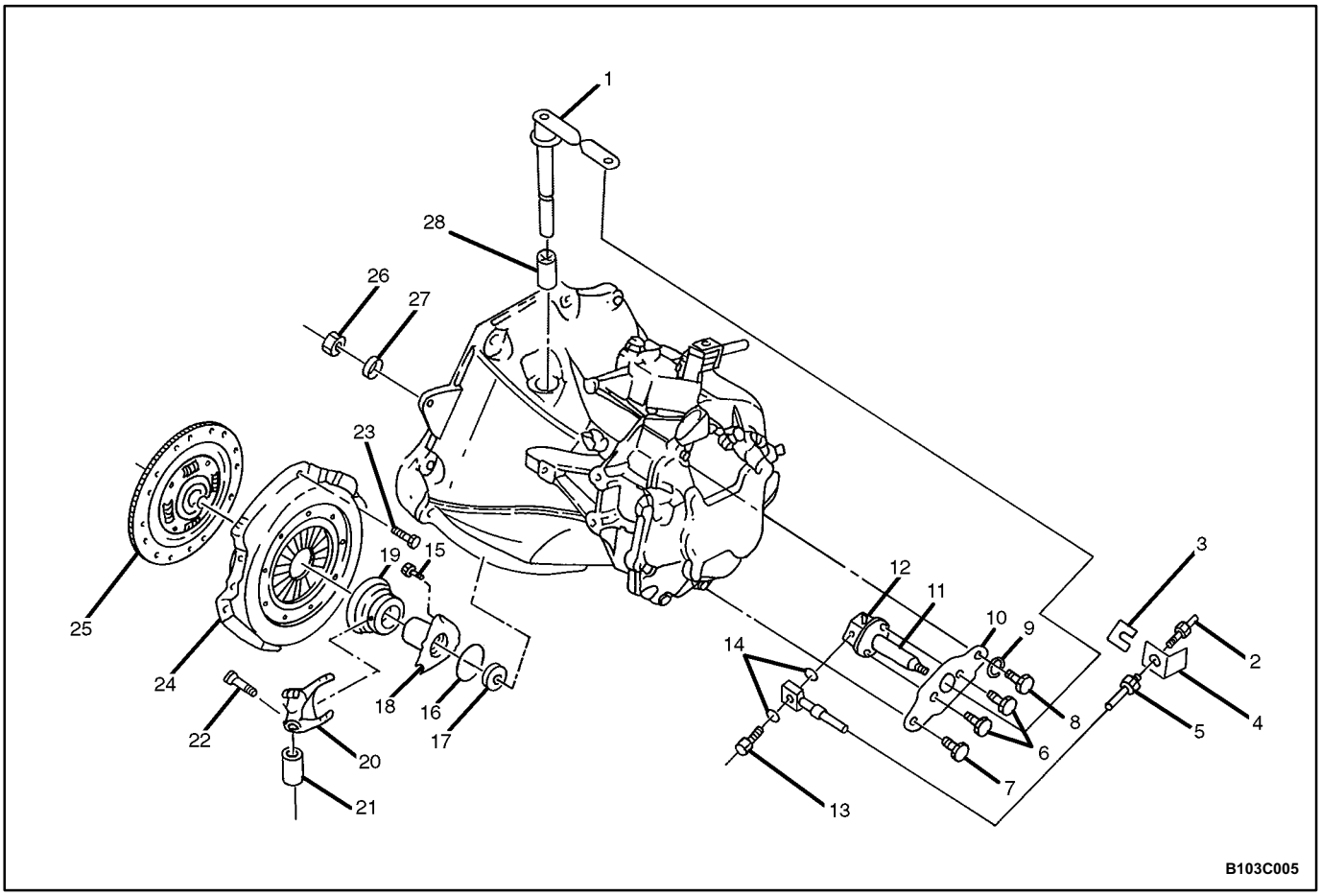

1 Release Lever
2 Pipe
3 Clip
4 Clamp
5 Hose
6 Bolt
7 Bolt
8 Bolt
9 Spring Washer
10 Release Cylinder Bracket
11 Release Cylinder
12 Air Bleeder
13 Bolt
14 Copper Washer
15 Bolt
16 O-ring
17 Input Shaft Seal
18 Bearing Guide Sleeve
19 Release Bearing
20 Fork
21 Bushing
22 Bolt
23 Bolt
24 Pressure Plate
25 Clutch Disc
26 Nut
27 Spring Washer
28 Bushing

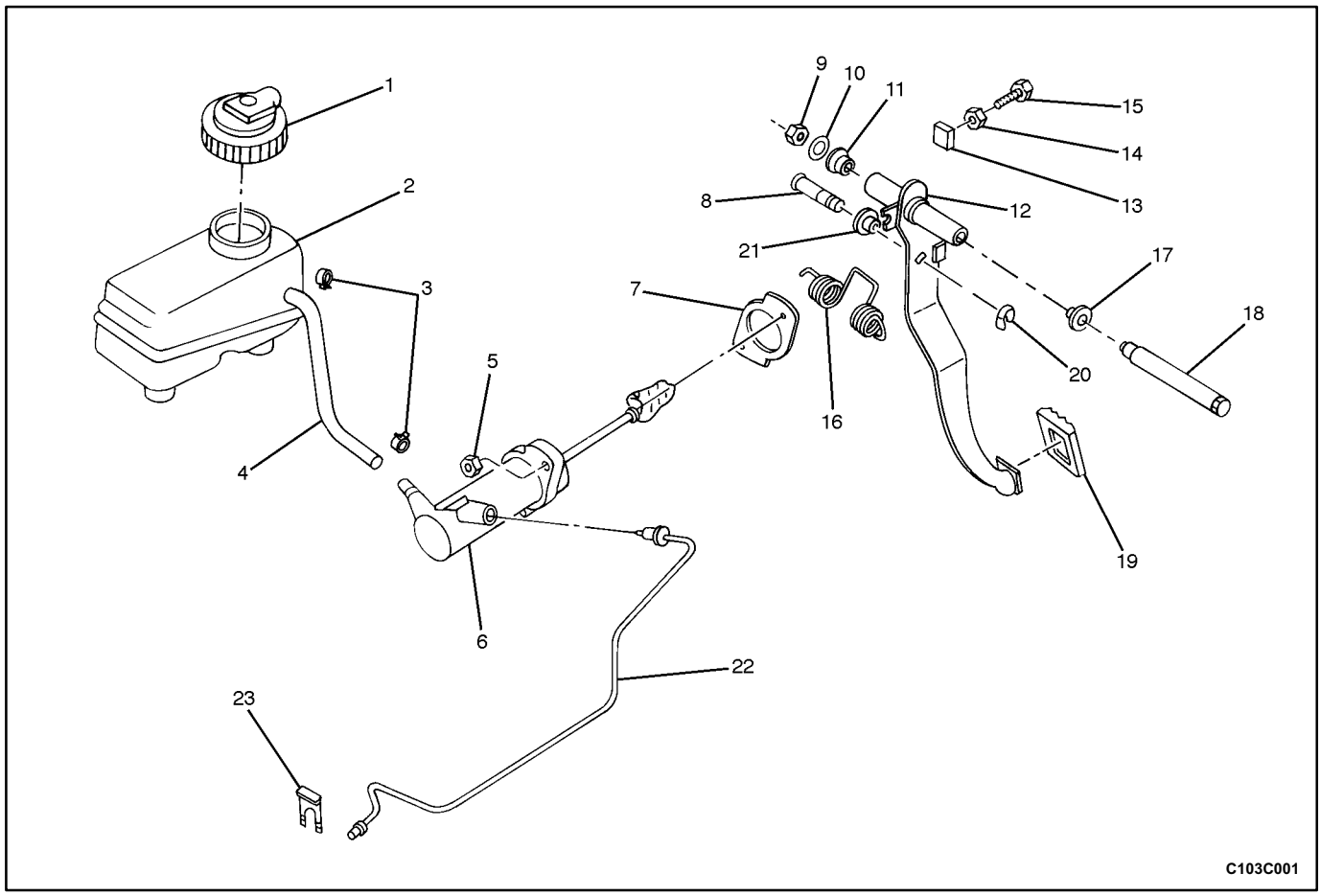

1 Reservoir Cap
2 Clutch/Brake Reservoir
3 Spring Clamps
4 Reservoir Hose
5 Nut
6 Master Cylinder
7 Gasket
8 Piston Rod Bolt
9 Nut
10 Washer
11 Clutch Pedal Bushing
12 Clutch Pedal
13 Clutch Pedal Buffer
14 Nut
15 Bolt
16 Return Spring
17 Clutch Pedal Bushing
18 Pedal Mounting Shaft
19 Clutch Pedal Pad
20 Locking Washer
21 Clutch Pedal Bushing
22 Hydraulic Clutch Pipe
23 Clip

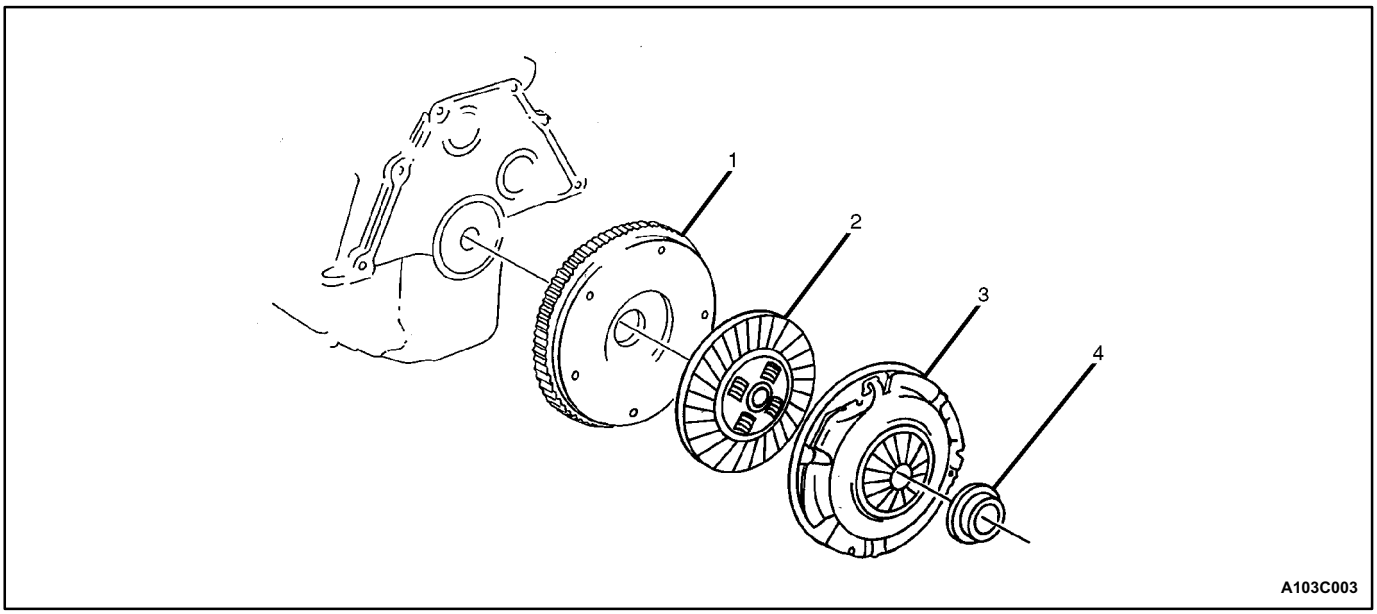

1 Flywheel
2 Clutch Disc
3 Pressure Plate
4 Release Bearing

MAINTENANCE AND REPAIR

ON-VEHICLE SERVICE

CLUTCH PEDAL

Removal Procedure

1. Disconnect the negative battery cable.
2. Disconnect the return spring from the mount brace.

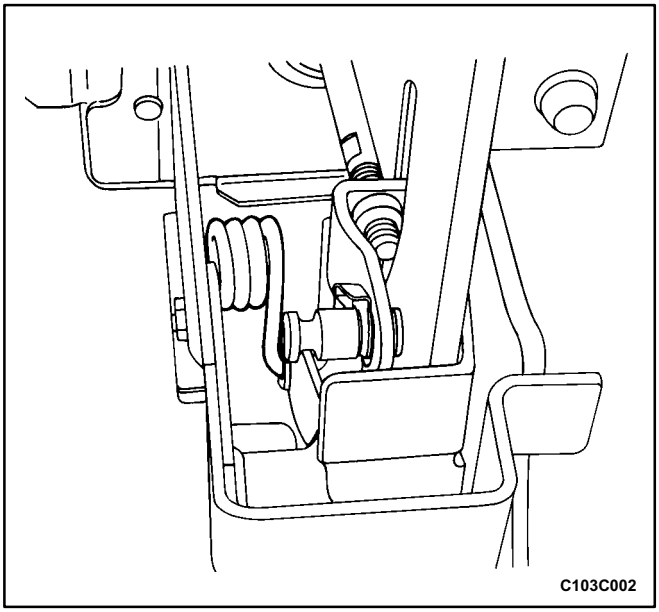

3. Remove the nut, the washer, and the pedal mounting shaft.

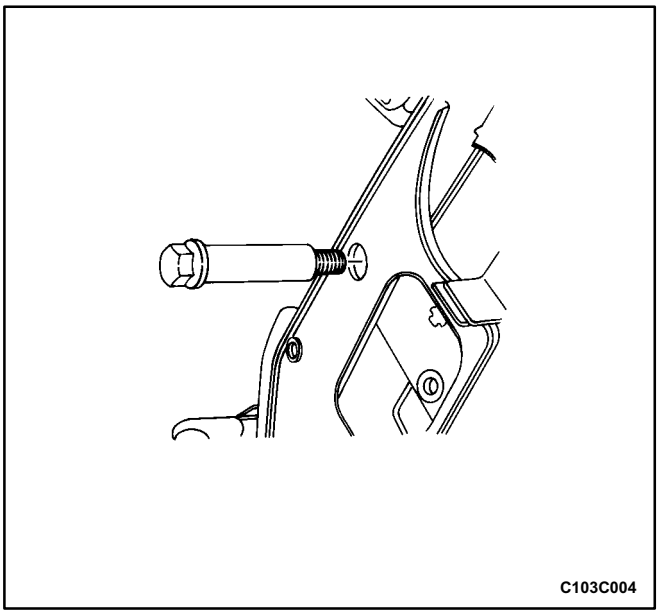

4. Remove the locking washer and the piston rod bolt.
5. Remove the clutch pedal from the vehicle.

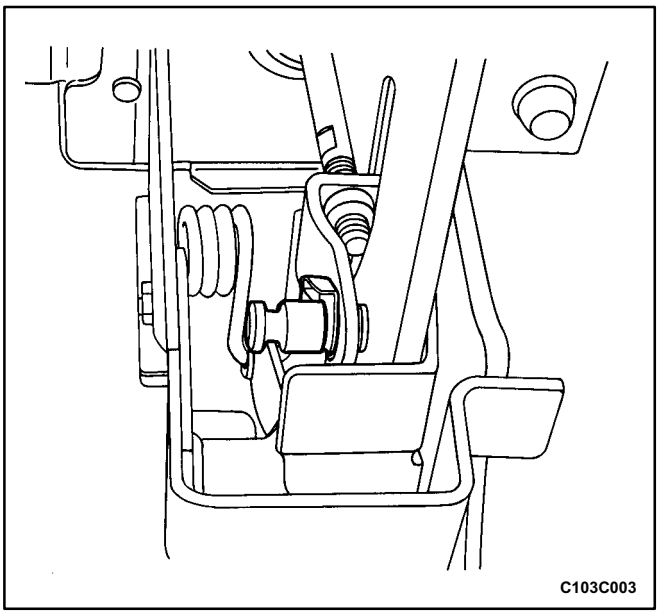

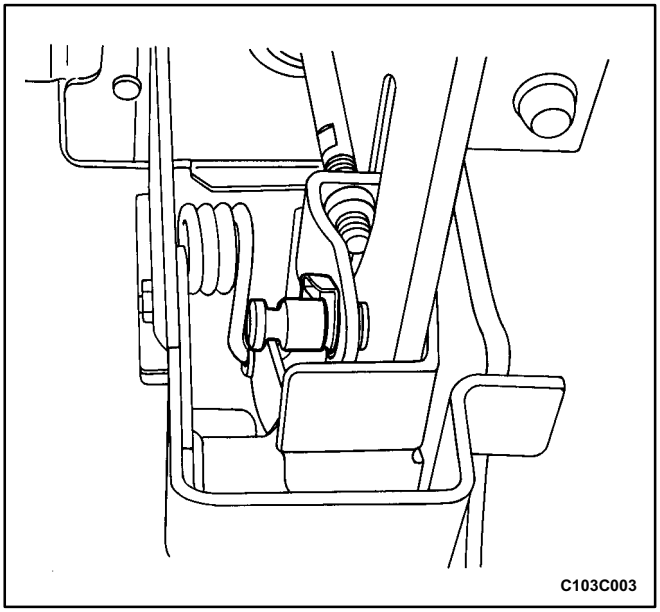

Installation Procedure

1. Install the clutch pedal to the mount brace. Make sure the return spring engages the notch on the rear of the clutch pedal.
2. Coat the piston rod bolt with multi purpose grease.
3. Install the piston rod bolt and the locking washer.

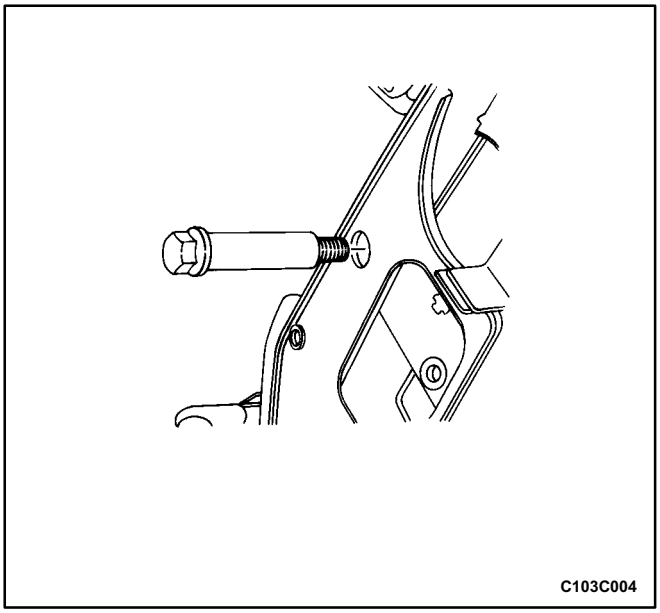

4. Coat the pedal mounting shaft with multi purpose grease.
5. Install the pedal mounting shaft, the washer, and the nut.

Tighten

Tighten the clutch pedal nut to 18 N•m (13 lb•ft).

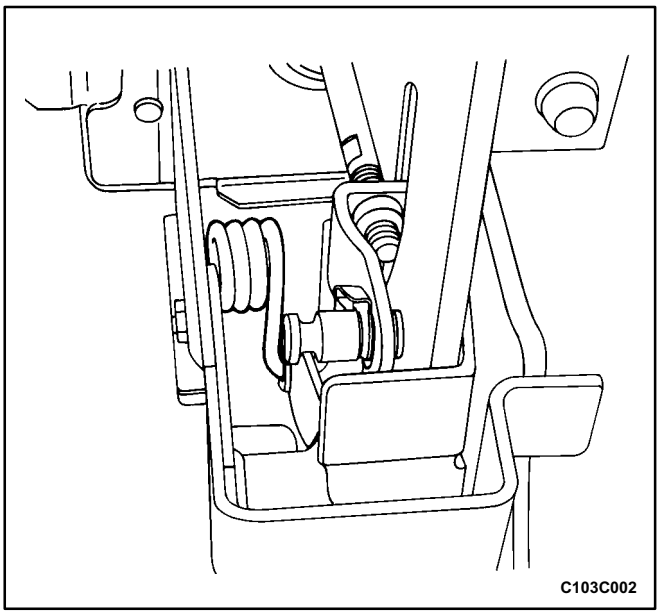

6. Connect the return spring to the mount brace.
7. Connect the negative battery cable.

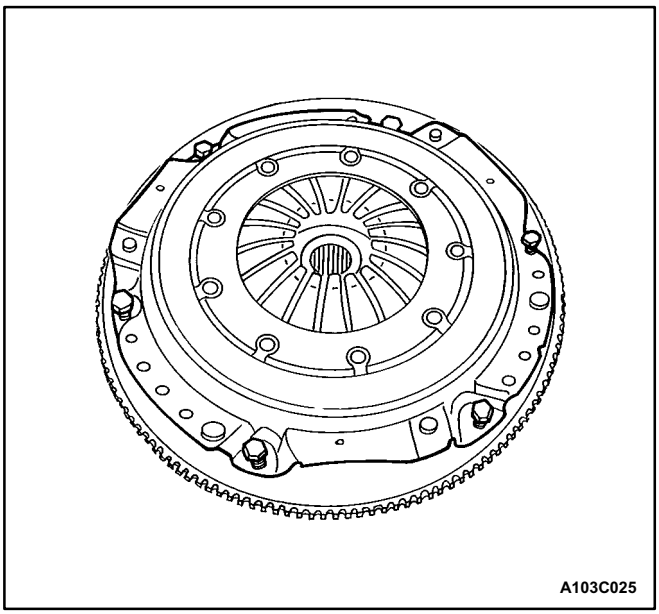

CLUTCH DISC AND RELATED COMPONENTS

Removal Procedure

1. Disconnect the negative battery cable.
2. Raise and suitably support the vehicle.
3. Remove the left front wheel. Refer to *Section 2E, Tires and Wheels*.
4. Remove the engine under covers. Refer to *Section 9N, Frame and Underbody.*
5. Remove the transaxle from the vehicle. Refer to *Section 5B, Five Speed Manual Transaxle*.
6. Remove the pressure plate bolts and the pressure plate. Support the pressure plate when you remove the last bolt.

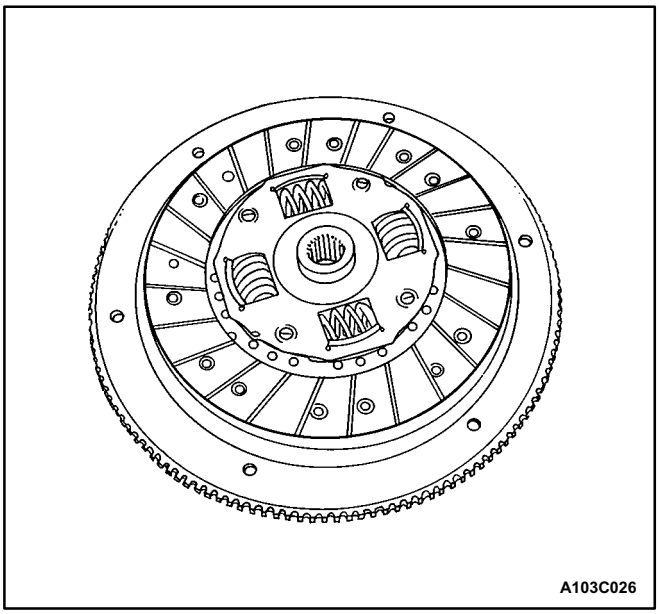

7. Remove the clutch disc.

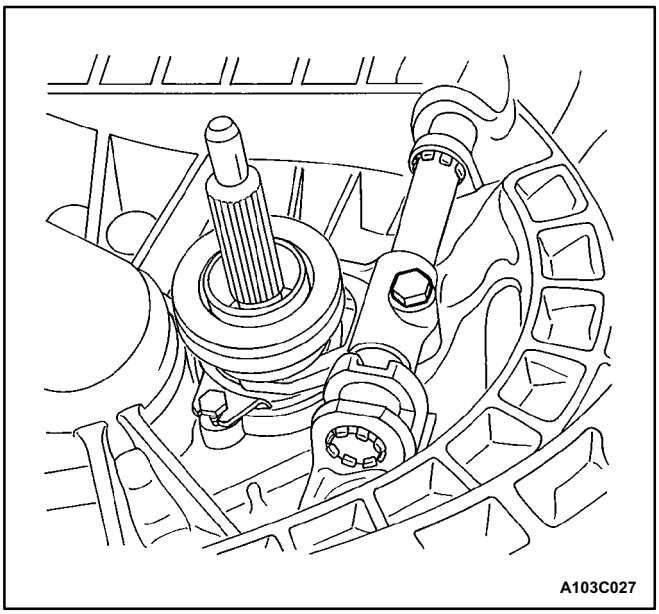

8. Remove the release fork bolt.

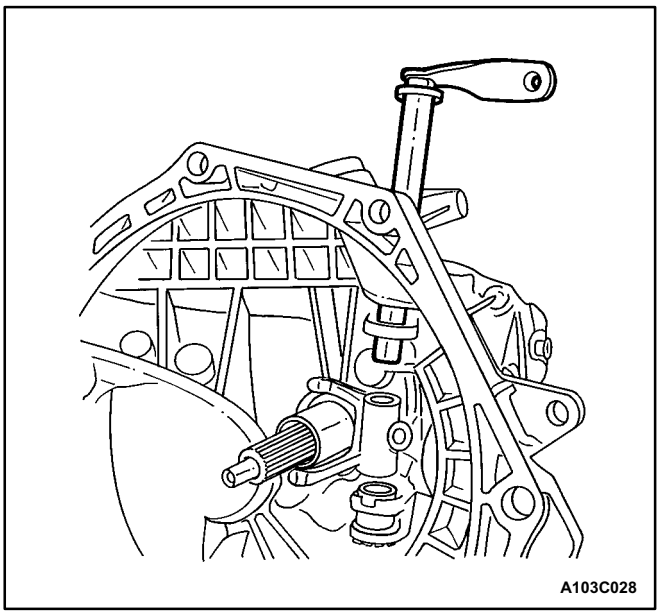

9. Pull the clutch release shaft upward, out of the transaxle.

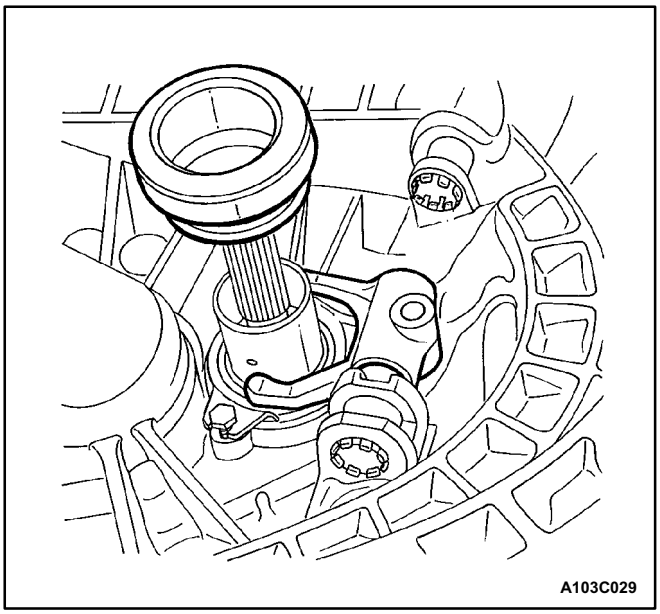

10. Remove the fork and the release bearing from the release bearing guide sleeve.

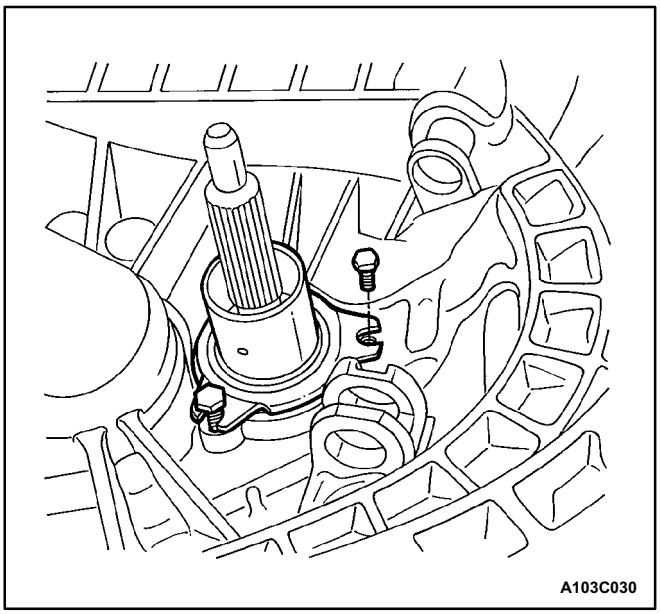

11. Remove the bolts and the release bearing guide sleeve.

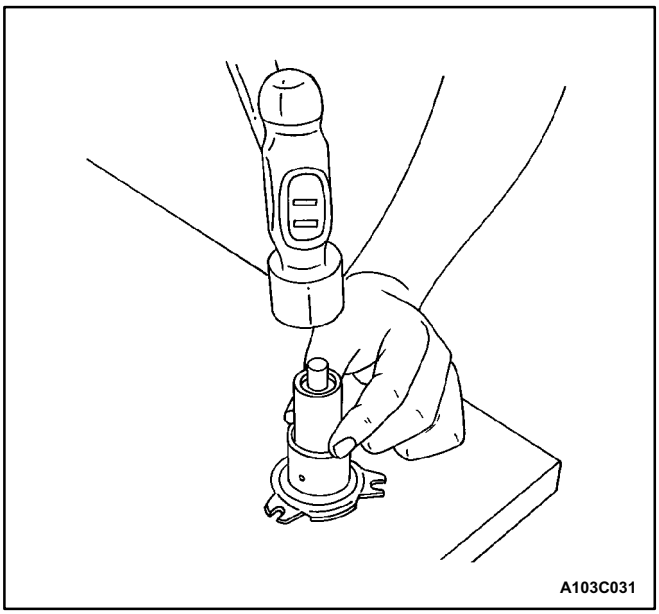

12. Remove the input shaft seal from the release bearing guide sleeve.

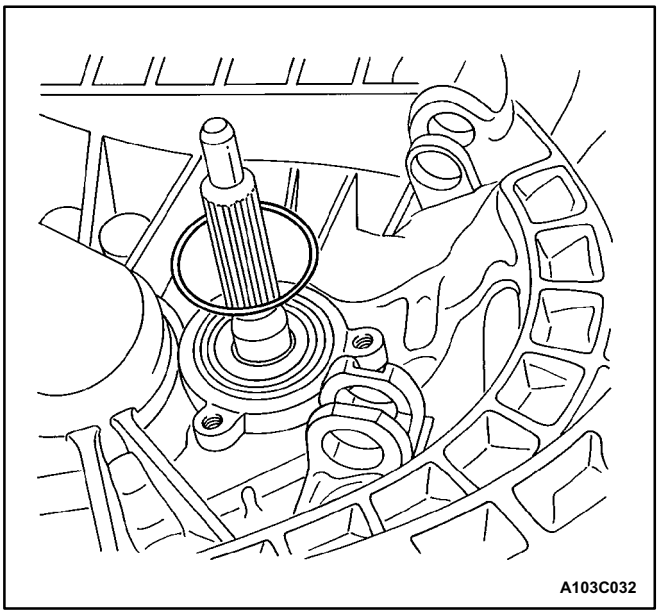

13. Remove the Oring from the groove in the transaxle case.

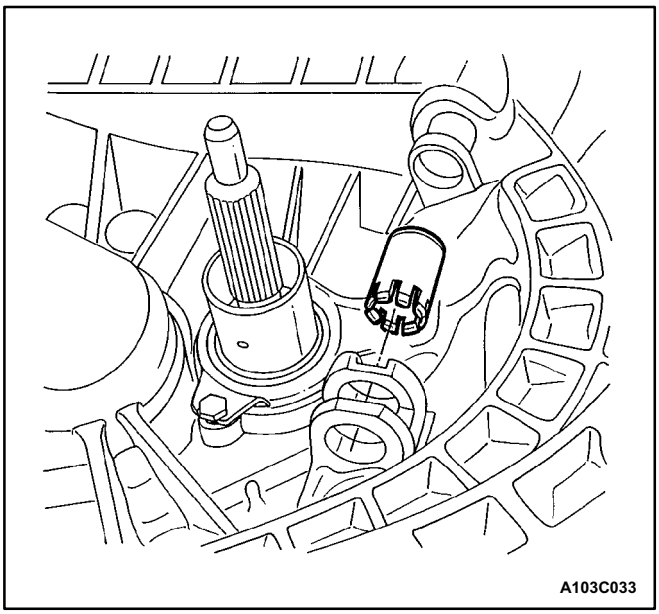

14. Remove the release lever shaft bushings.

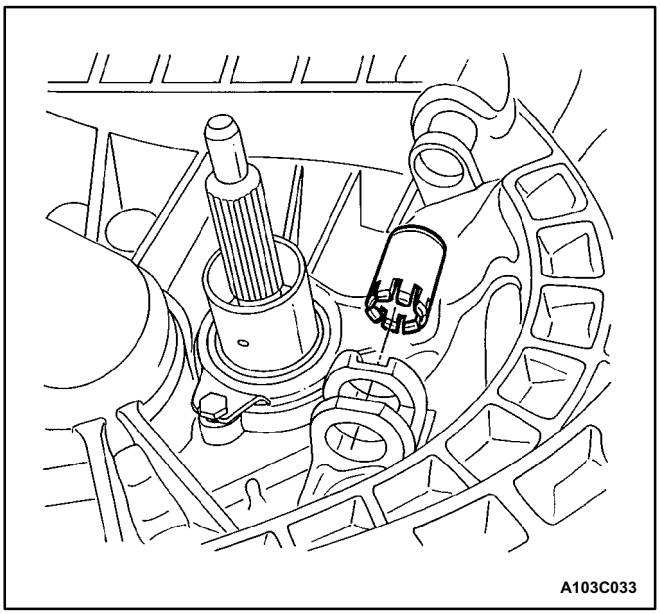

Installation Procedure

Tools Required

J-36547 Input Shaft Seal Installer

J-42474 Clutch Arbor

1. Install the release lever shaft bushings. Coat the bushing bores with multipurpose grease.

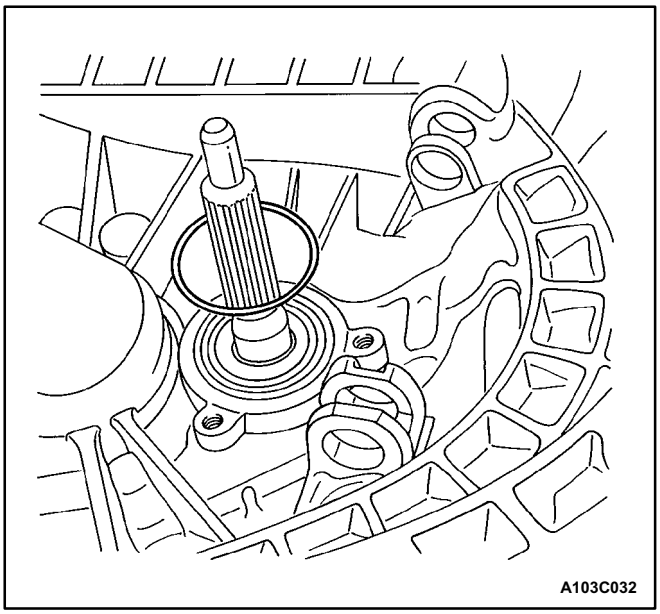

2. Install the O-ring into the groove in the case.

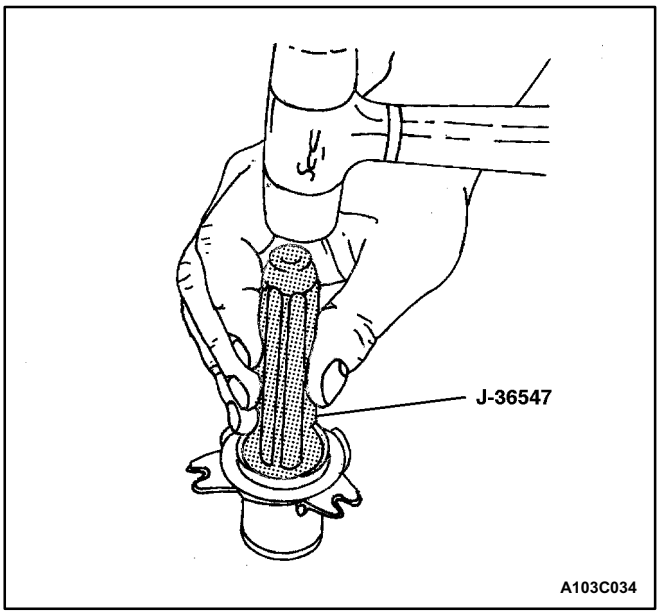

3. Install the input shaft seal into the release bearing guide sleeve. Use input shaft seal installer J-36547 with a hammer.

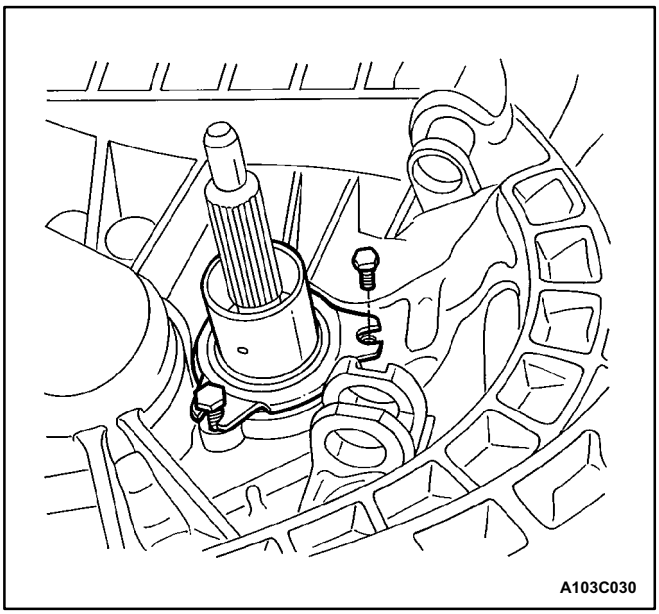

4. Install the release bearing guide sleeve and the bolts.

Tighten

Tighten the release bearing guide sleeve bolts to 5 N•m (45 lb•in).

5. Coat the sleeve surface with multi purpose grease.

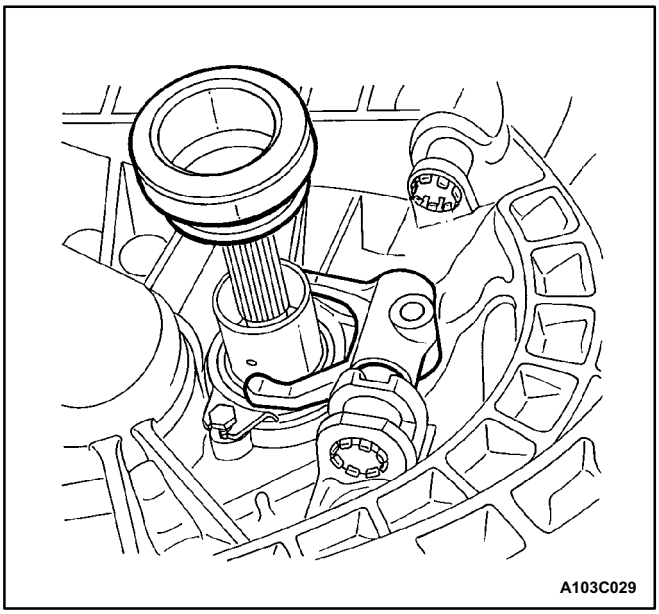

6. Coat the release bearing bore with multi purpose grease.
7. Install the release bearing, with the clutch fork, onto the release bearing guide sleeve.

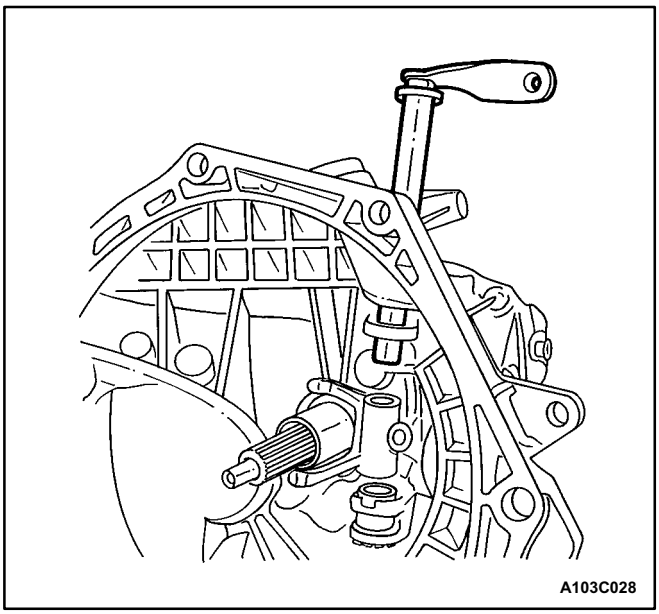

8. Install the release lever shaft from the top of the transaxle. Guide the shaft through the clutch fork.

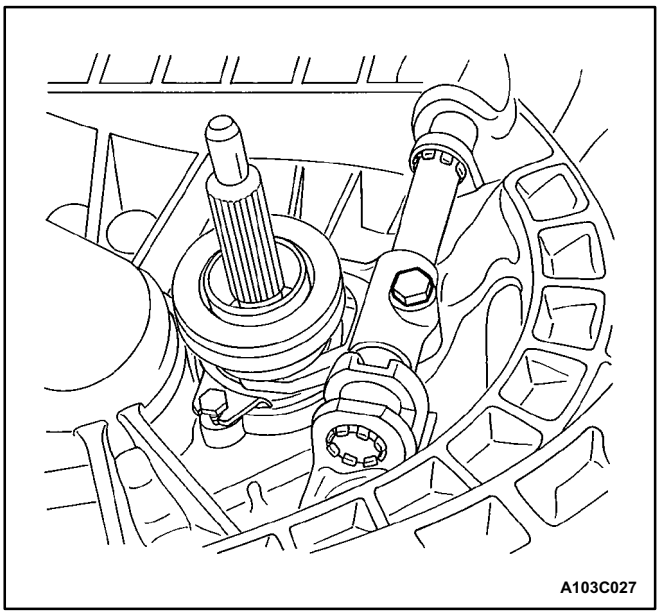

9. Align the shaft to the fork and install the bolt.

Tighten

Tighten the clutch fork to release lever shaft bolt to 35 N•m (26 lb•ft).

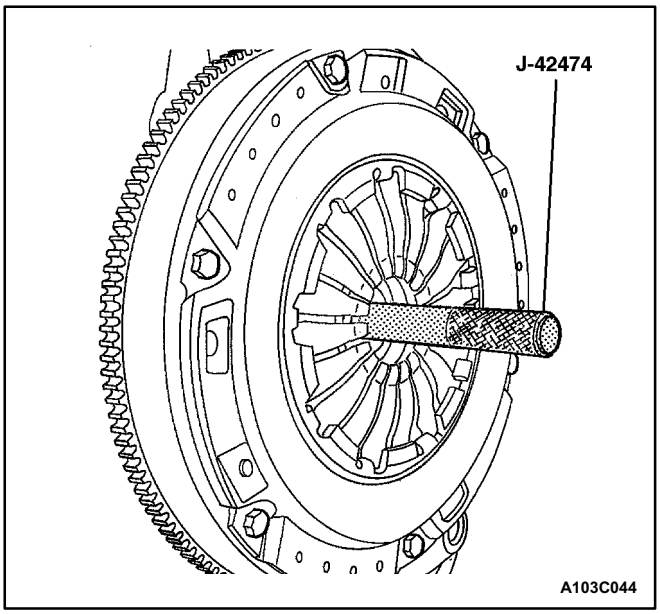

10. Coat the spline on the clutch disc with multipurpose grease.
11. Align the pressure plate and the clutch disc onto the flywheel using the clutch arbor J-42474.
12. Install the pressure plate bolts.

Tighten

Tighten the pressure plate to flywheel bolts to 15 N•m (11 lb•ft).

13. Remove the clutch arbor J-42474.
14. Install the transaxle into the vehicle. Refer to *Section 5B, Five Speed Manual Transaxle*.
15. Install the engine under covers. Refer to *Section 9N, Frame and Underbody.*
16. Install the left front wheel. Refer to *Section 2E, Tires and Wheels*.
17. Lower the vehicle.
18. Connect the negative battery cable.

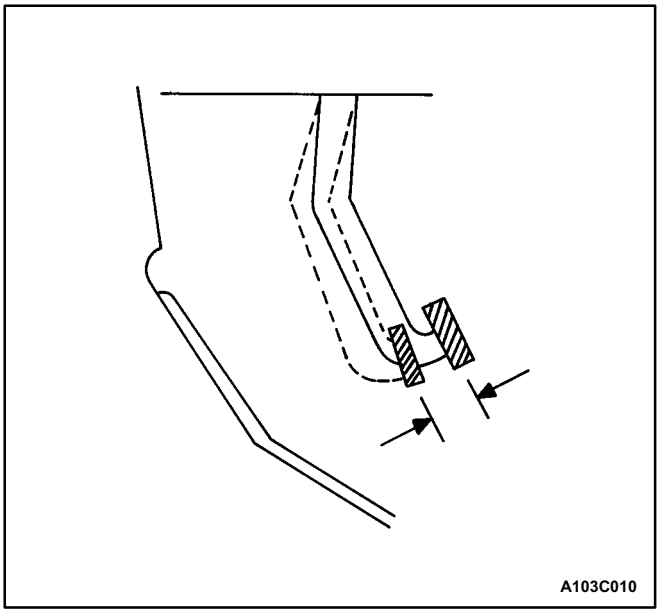

CLUTCH PEDAL ADJUSTMENT (HYDRAULIC)

Adjustment Procedure

1. Determine the clutch pedal play. Press the clutch pedal lightly with your hand and measure the distance when you feel resistance.

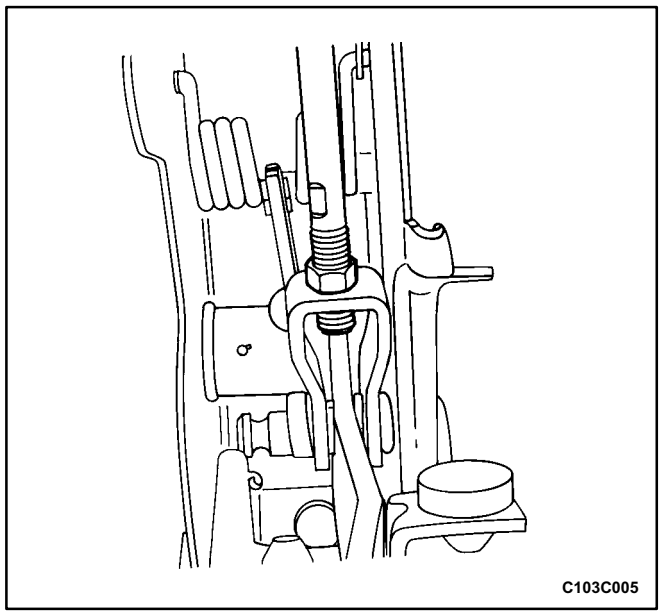

2. Adjust the clutch pedal play. Loosen the locknut and turn the pushrod. Clutch pedal play should measure 6 to12 mm (0.2 to 0.5 inch). Tighten the locknut after adjustment.

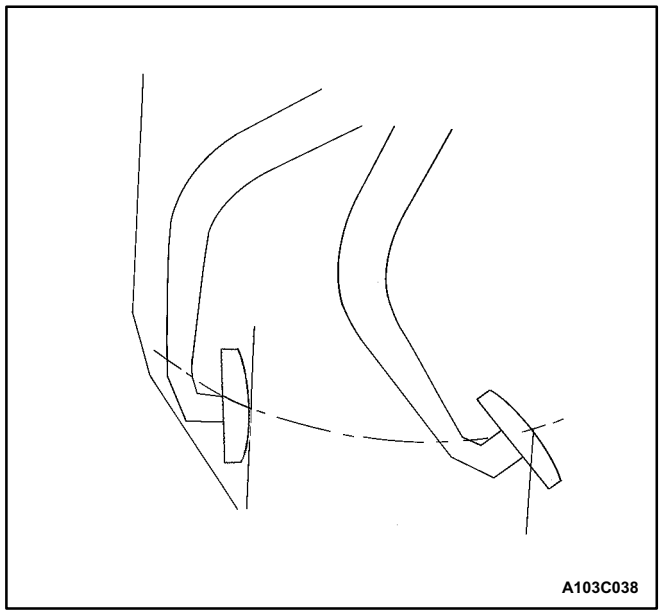

3. Measure the clutch pedal travel. Press the clutch pedal all the way to the floor. Measure from the starting position to the ending position.

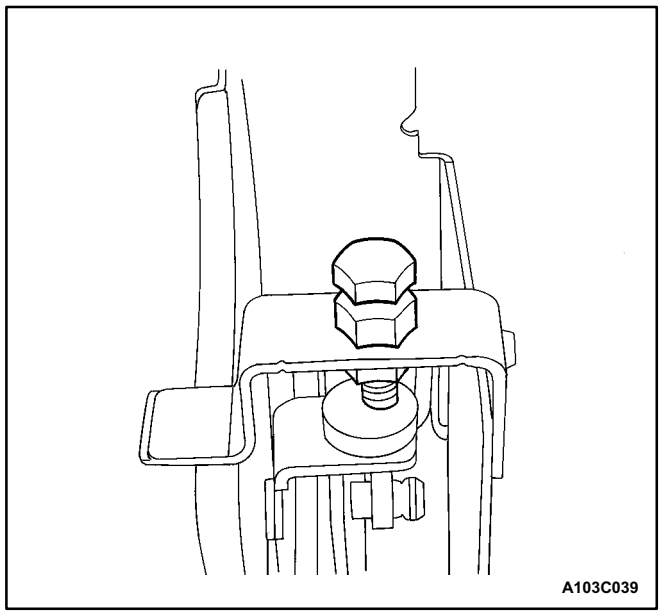

4. Adjust the clutch pedal travel. Loosen the locknut and turn the bolt. Clutch pedal travel should measure more than 140 mm (5.5 inches). Tighten the locknut after adjustment.

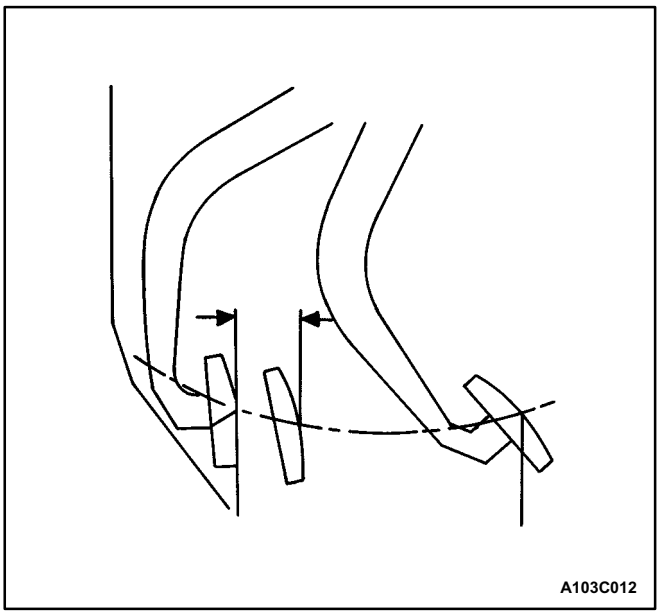

CLUTCH RELEASE POINT ADJUSTMENT (HYDRAULIC)

Adjustment Procedure

1. Apply the parking brake.
2. Run the engine at idle speed.
3. While you move the shift lever into the reverse position, press the clutch pedal slowly and measure the distance between the point when gear noise is not heard and the point the clutch pedal is completely depressed. The distance should be more than 30 mm (1.2 inches).
4. If the distance is not more than 30 mm (1.2 inches), check the following:
   - Clutch pedal height.
   - Clutch pedal play.
   - Air in the system.
   - Clutch cover and disk.

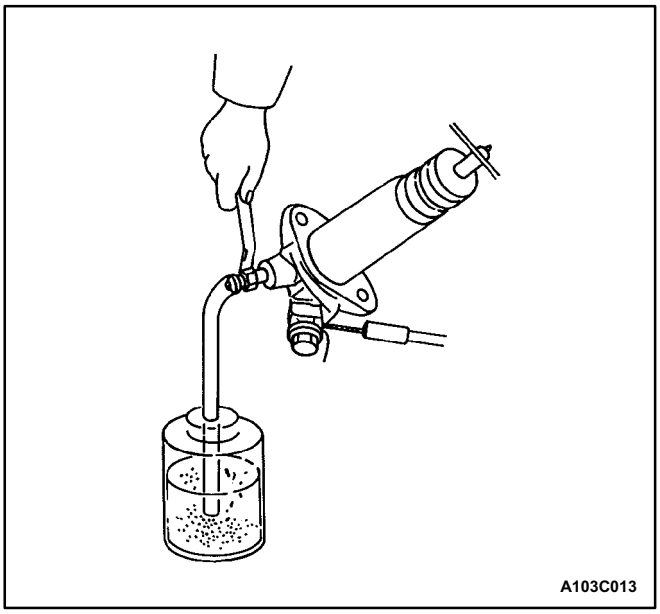

AIR BLEEDING

Bleed the hydraulic system to remove the air which entered when the pipes were disconnected for repairs. The clutch/brake fluid in the clutch/brake reservoir must be maintained at the MIN level or higher during air bleeding.

1. Attach a vinyl hose to the bleeder plug. Place the other end of the vinyl tube in a glass container halffilled with brake fluid.
2. Slowly pump the clutch pedal several times.
3. While you press the clutch pedal, loosen the bleeder screw until the fluid starts to run out. Close the bleeder screw.
4. Repeat Step 3 until there are no air bubbles in the fluid.
5. Fill the reservoir with brake fluid up to the MAX level.

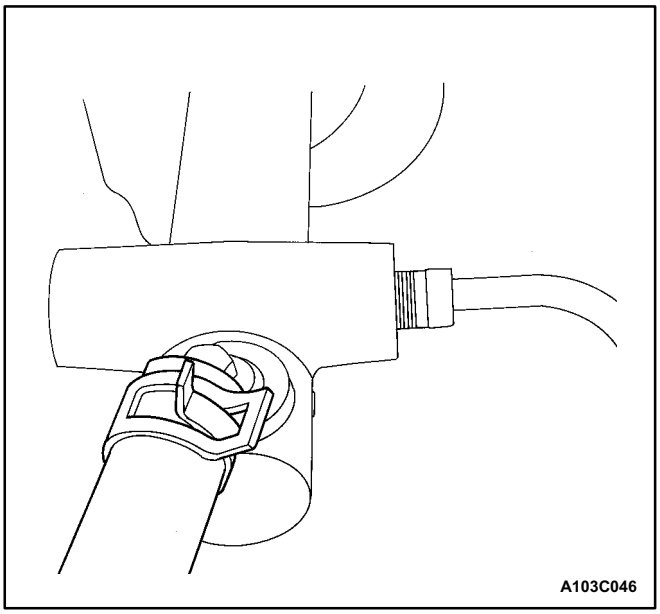

CLUTCH MASTER CYLINDER ASSEMBLY

Removal Procedure

Before disconnecting the reservoir tank hose, remove the clutch/brake fluid from the reservoir tank.

1. Disconnect the negative battery cable.
2. Disconnect the spring clamp on the master cylinder. Remove the reservoir hose.

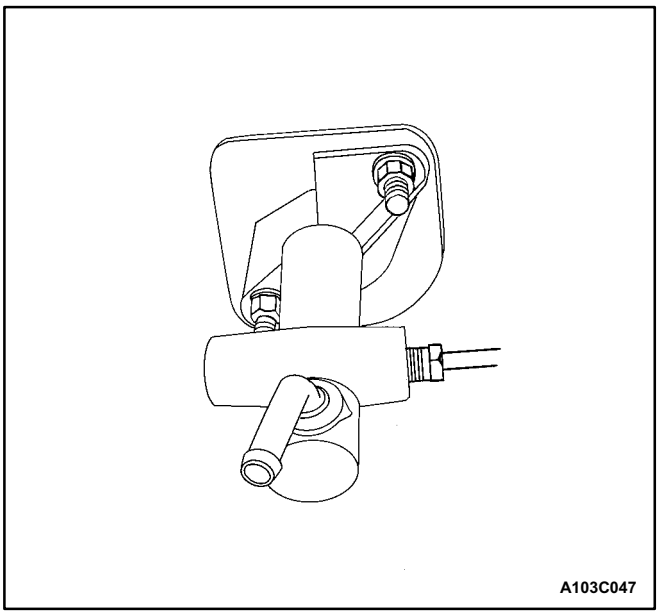

3. Disconnect the pipe connected to the master cylinder.

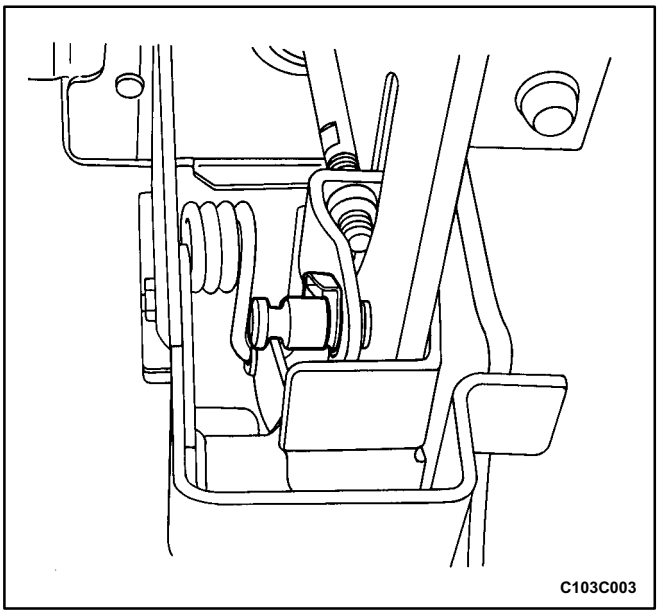

4. Remove the locking washer and the piston rod bolt from the clutch pedal and piston rod clevis.

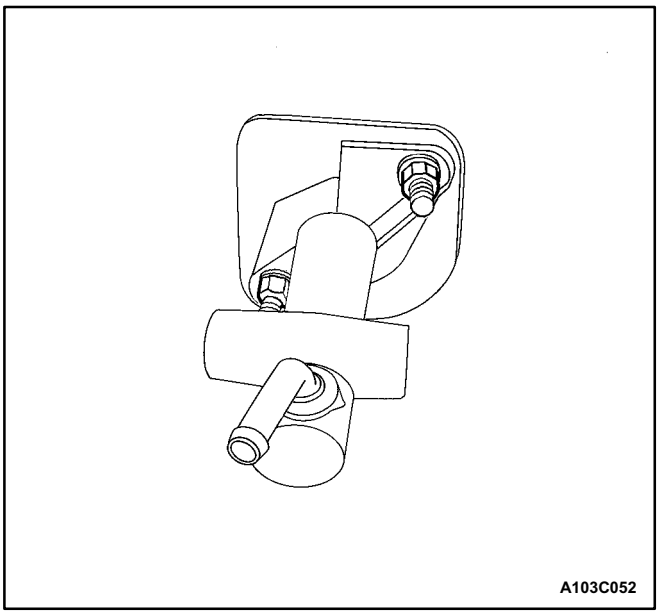

5. Remove the locknuts on the master cylinder bracket. Remove the master cylinder in the direction of the engine compartment.

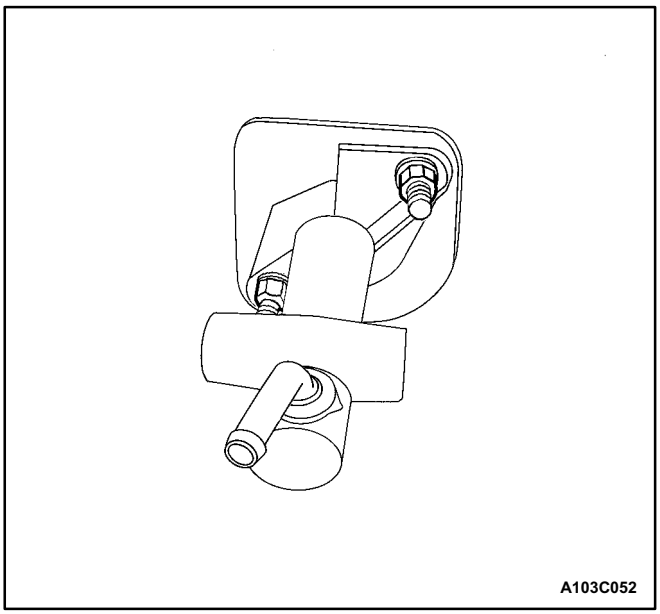

Installation Procedure

1. Install the master cylinder to the mounting bolts and install the locknuts.

   Tighten

   Tighten the clutch master cylinder locknuts to 22 N•m (18 lb•ft).

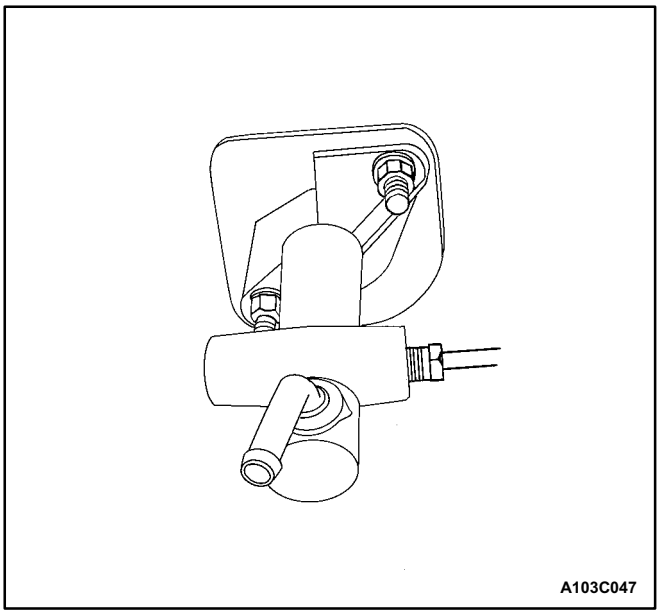

2. Connect the pipe to the master cylinder.

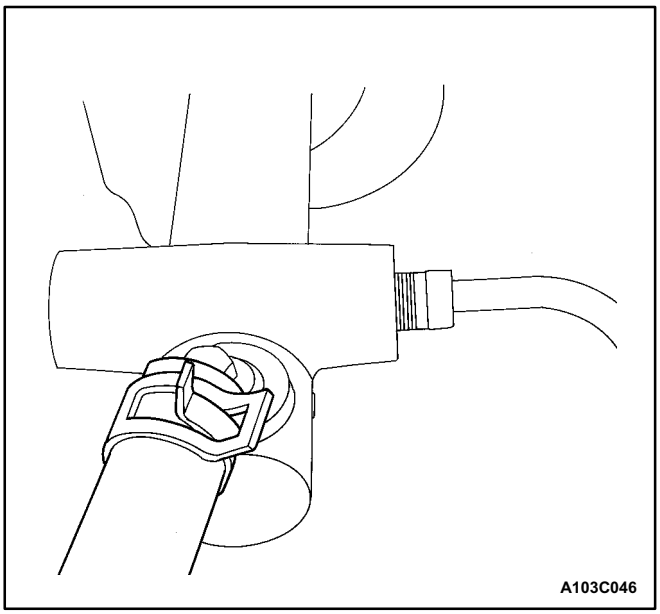

3. Connect the reservoir hose to the master cylinder and tighten the spring clamp.

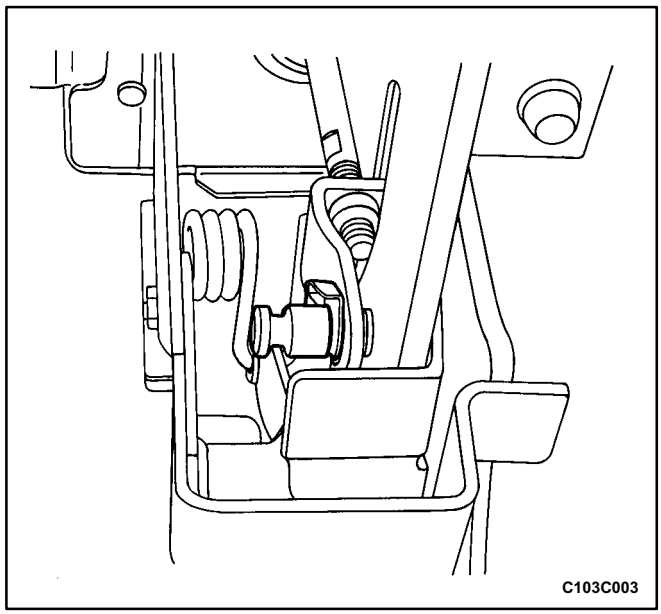

4. Coat the piston rod bolt with multi purpose grease.
5. Install the piston rod clevis, the piston rod bolt, and the locking washer onto the clutch pedal.
6. Bleed the air. Refer to „Air Bleeding” in this section.
7. Adjust the clutch pedal. Refer to „Clutch Pedal Adjustment (Hydraulic)” in this section.
8. Fill the reservoir with clutch/brake fluid up to the MAX level.
9. Connect the negative battery cable.

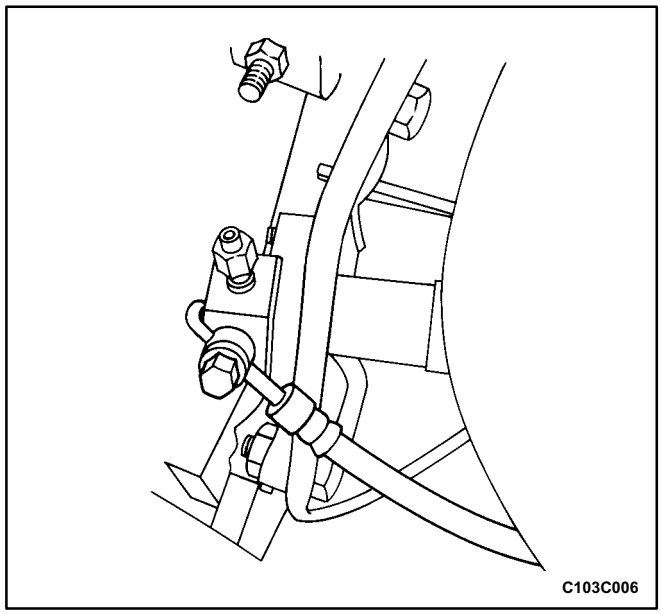

CLUTCH RELEASE CYLINDER ASSEMBLY

Removal Procedure

1. Disconnect the negative battery cable.
2. Remove the bolt and disconnect the hose from the clutch release cylinder.

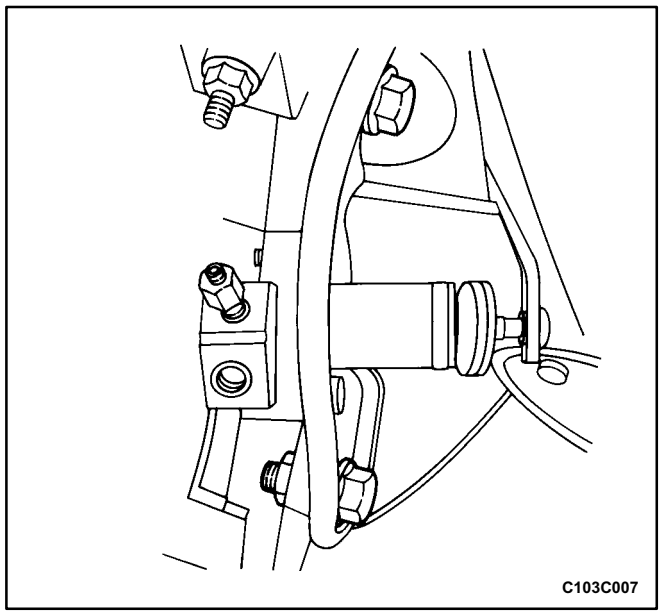

3. Remove the clutch release cylinder bolts and remove the release cylinder from the transaxle.

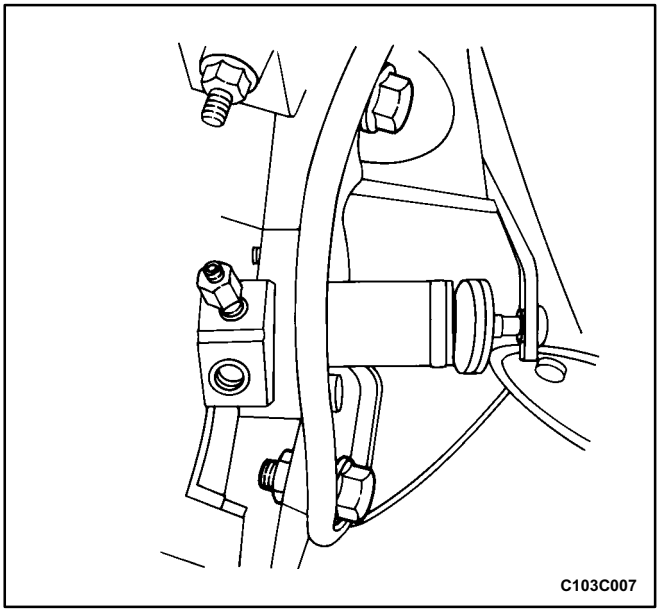

Installation Procedure

1. Connect the release cylinder to the transaxle and install the bolts.

   Tighten

   Tighten the release cylinder bolts to 60 N•m (44 lb•ft).

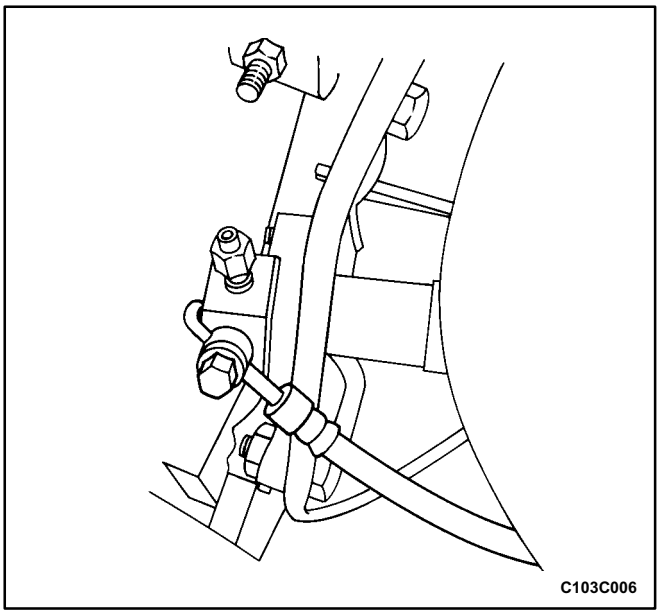

2. Connect the hose assembly to the cylinder body.
3. Apply grease where the pushrod connects to the release lever. Be careful not to stain the boot.
4. Bleed the air. Refer to „Air Bleeding” in this section.
5. Adjust the clutch pedal. Refer to „Clutch Pedal Adjustment (Hydraulic)” in this section.
6. Fill the reservoir with clutch/brake fluid up to the MAX level.
7. Connect the negative battery cable.

UNIT REPAIR

CLUTCH MASTER CYLINDER

Disassembly Procedure

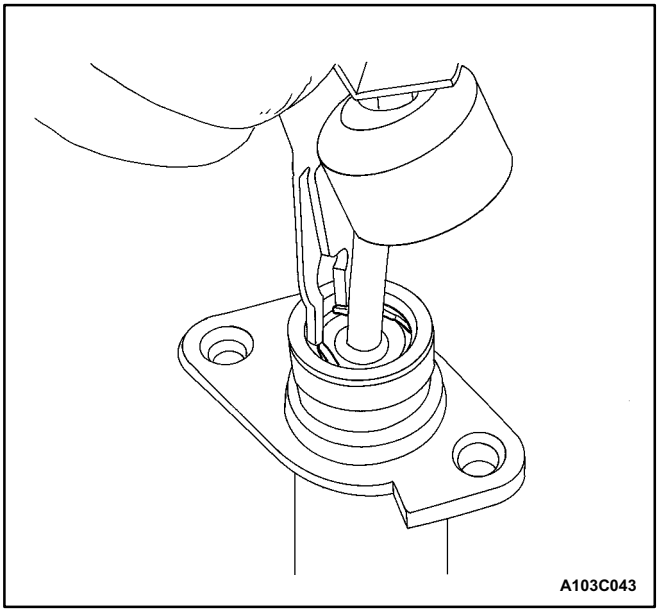

1. Remove the clutch master cylinder assembly from the vehicle. Refer to "Clutch Master Cylinder Assembly" in this section.
2. Remove the boot and disconnect the piston stop ring using ring pliers.

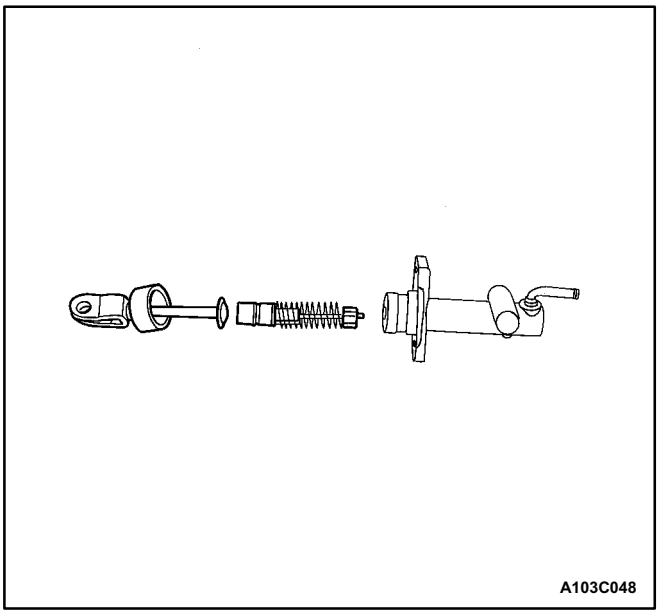

3. Remove the pushrod assembly and the piston assembly.
4. Inspect the clutch master cylinder wall and the piston for wear. Replace the piston if necessary.
5. Inspect the cup and the piston for wear. Fluid leaks will show wear on the cup and the piston. Replace the cup and the piston if necessary.
6. Inspect the pushrod for wear. Repair the pushrod if necessary.

Assembly Procedure

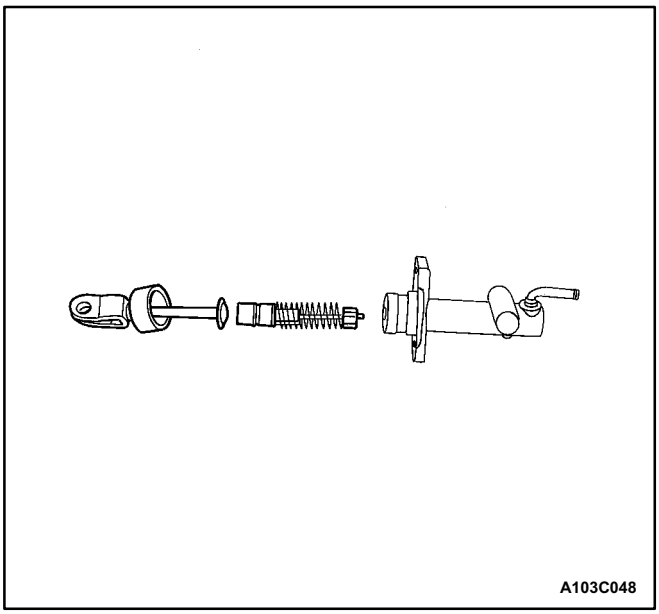

1. Apply clean fluid to the piston assembly cup and insert the piston assembly and the pushrod assembly into the master cylinder body.

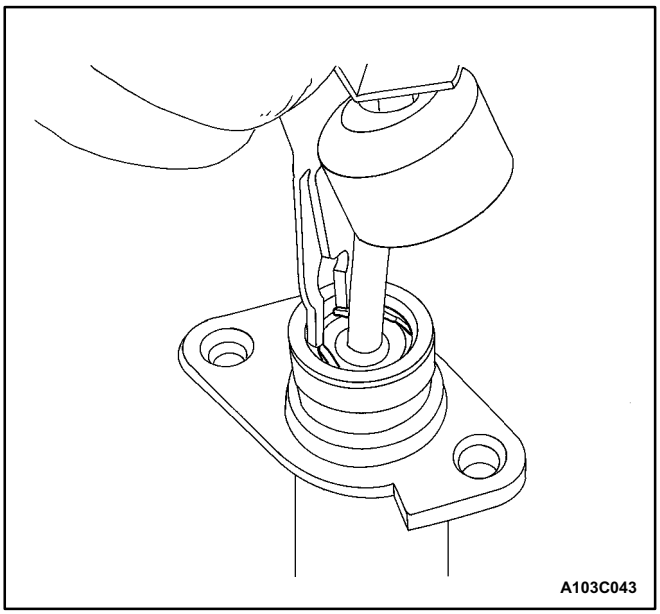

2. Install the piston stop ring using ring pliers. Install the boot.
3. Install the clutch master cylinder assembly into the vehicle. Refer to „Clutch Master Cylinder Assembly" in this section.

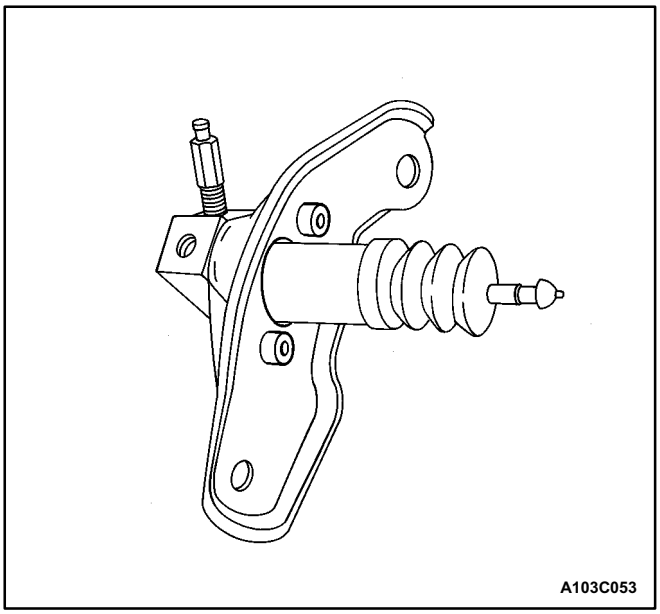

CLUTCH RELEASE CYLINDER

Disassembly Procedure

1. Remove the clutch release cylinder assembly from the vehicle. Refer to „Clutch Release Cylinder Assembly" in this section.
2. Remove the bolts and the bracket.

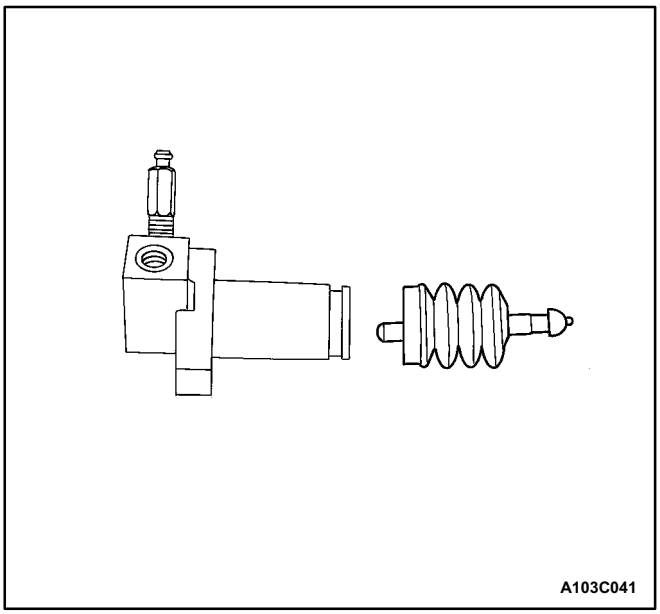

3. Remove the boot and the pushrod.

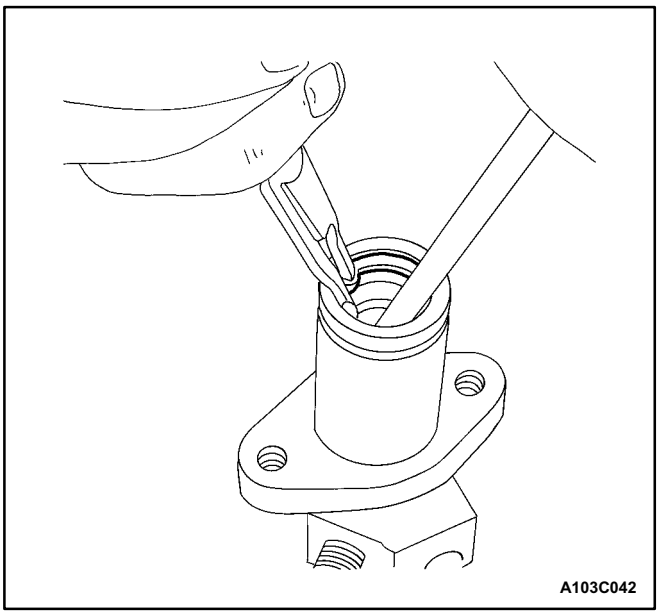

4. Compress the piston with a driver, then remove the snap ring with snap ring pliers.
5. Remove the piston assembly.

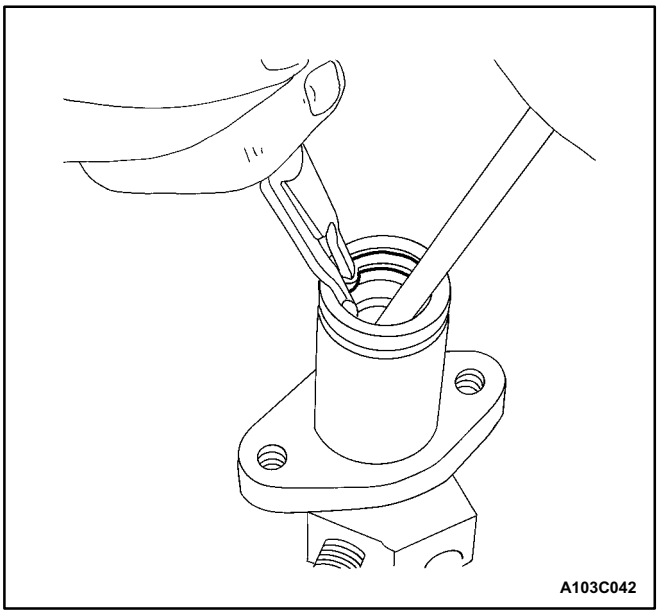

Assembly Procedure

1. Apply clean clutch fluid to the piston and the cup.
2. Install the spring to the piston, and insert the assembly into the cylinder body.
3. Compress the piston with a driver, then install the snap ring with snap ring pliers.

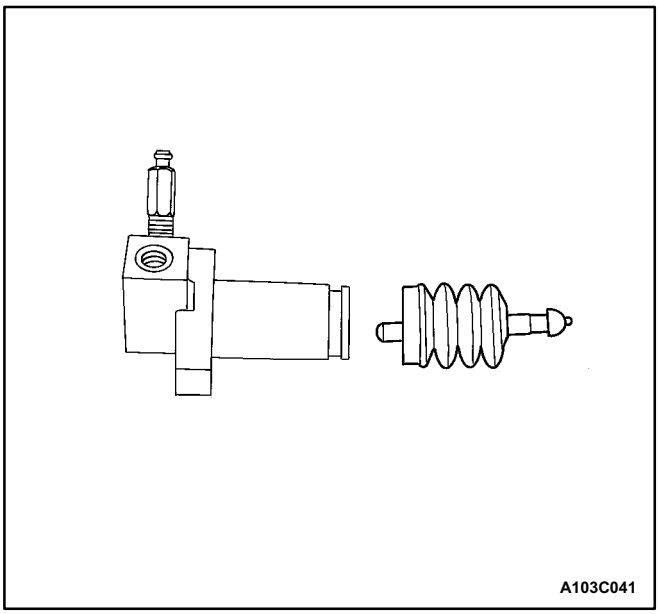

4. Install the push rod and the boot.

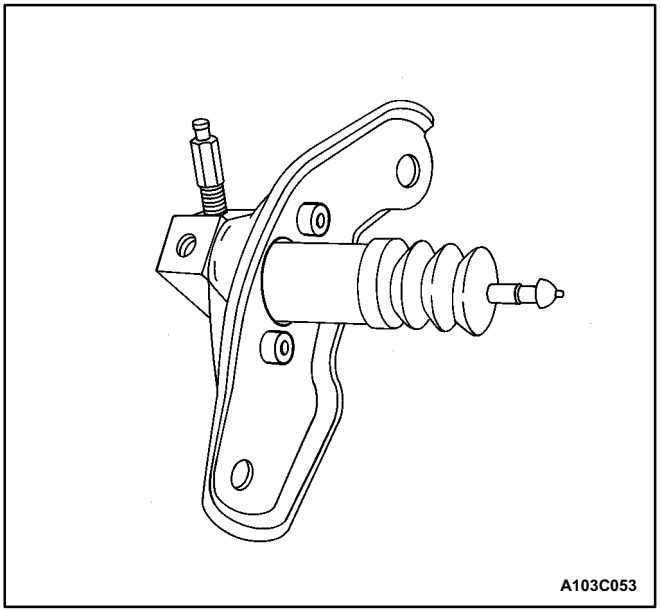

5. Install the bracket and the bolts.
6. Install the clutch release cylinder assembly. Refer to „Clutch Release Cylinder Assembly” in this section.

GENERAL DESCRIPTION AND SYSTEM OPERATION

DRIVING MEMBERS

The driving members consist of two flat surfaces machined to a smooth finish. One of these is the rear face of the engine flywheel, and the other is the pressure plate. The pressure plate is fitted into a steel cover, which is bolted to the flywheel.

DRIVEN MEMBERS

The driven member is the clutch disc with a splined hub which is free to slide lengthwise along the splines of the input shaft, but which drives the input shaft through these same splines.

The driving and driven members are held in contact by spring pressure. This pressure is exerted by a diaphragm spring in the pressure plate assembly.

OPERATING MEMBERS

The clutch release system consists of the clutch pedal, the clutch shaft, the fork, and the release bearing. When pressure is applied to the clutch pedal, the fork pivots on its shaft and the inner end pushes against the release bearing. The bearing then pushes against the release levers in the pressure plate assembly, thereby releasing the clutch.

STEERING

CONTENTS

SECTION 6A POWER STEERING SYSTEM

SECTION 6B POWER STEERING PUMP

SECTION 6C POWER STEERING GEAR

SECTION 6E STEERING WHEEL AND COLUMN

SECTION 6A

POWER STEERING SYSTEM

TABLE OF CONTENTS

Specifications 6A-1
Fastener Tightening Specifications 6A-1
Special Tools 6A-1
Special Tools Table 6A-1
Diagnosis 6A-2
Power Steering System Pressure Test 6A-2
Power Steering System Leak Test 6A-2
Maintenance and Repair 6A-3
On-Vehicle Service 6A-3
Bleeding the Power Steering System 6A-3
Checking and Adding Fluid 6A-3
Fluid Reservoir 6A-4
Hoses and Pipes 6A-5
General Description and System Operation 6A-12
Power Steering System 6A-12

SPECIFICATIONS

FASTENER TIGHTENING SPECIFICATIONS

Application	N•m	Lb•Ft	Lb•In
Power Steering Pump Pressure Line Fitting	27	20	-
Return Line Clip Screws	3	-	27
Steering Gear Inlet and Outlet Pipe Fittings	27	20	-

SPECIAL TOOLS

SPECIAL TOOLS TABLE

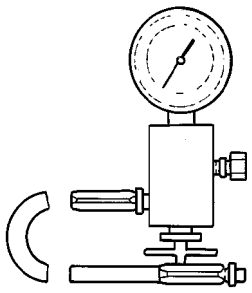 A105A009	**KM-354-B Pressure Test Gauge Kit**

DIAGNOSIS

POWER STEERING SYSTEM PRESSURE TEST

Tools Required

KM-354-B Pressure Test Gauge Kit

Check the fluid pressure as follows to determine whether the trouble is in the pump or the gear unit.

Test Procedure

1. Check the power steering fluid level and the power steering pump belt tension. Refer to „Checking and Adding Fluid" in this section and *Section 6B, Power Steering Pump*.
2. Disconnect the high pressure line at the pump. Use a small container to catch any fluid.
3. Connect the hose of the pressure test gauge kit KM-354-B to the power steering pressure hose from the power steering pump.
4. Place the gear selector lever in PARK (automatic transaxle equipped vehicles) or NEUTRAL (manual transaxle equipped vehicles). Set the parking brake.
5. Open the gauge valve fully.
6. Start the engine and let it idle.
7. Turn the steering wheel from lock to lock several times to warm the fluid to operating temperature.
8. Increase the engine speed to 1,500 rpm.

Notice: The power steering pump could be damaged if the valve is fully closed for more than 5 seconds.

9. Close the gauge valve fully, and read the pressure. The pump pressure with the valve closed should be between 8,330 kPa to 8,820 kPa (1,208 psi to 1,279 psi).
   With electronic variable orifice, the pressure should be between 8,500 kPa to 8,960 kPa (1,233 psi to 1,299 psi)
10. Immediately open the gauge valve fully.
11. Turn the steering wheel all the way to the left and the right. If the pressure is within the specified limits, the problem is not in the pump. Check the power steering gear for leaks.

POWER STEERING SYSTEM LEAK TEST

General Procedure

Inspect the following:

- The fluid reservoir for overfill.
- Fluid for aeration and overflow.
- The hoses for loose connections.
- The torsion bar, stub shaft and adjuster seals for leaks.
- The component sealing surfaces for damage.

Important: Verify the exact point of the leak. The point from which the fluid is dripping is not necessarily the point at which the system is leaking. When service is required, clean the leak area upon disassembly, replace the leaking seal, check the component sealing surfaces for damage and reset the torque bolt to specifications, where required.

External Leak Check

The purpose of this procedure is to pinpoint the location of the leak. In some cases, the leak can be easily located, but seepage type leaks may be harder to find. To locate seepage leaks, use the following method:

1. With the engine off, wipe dry the complete power steering system.
2. Check the power steering fluid level in the pump's reservoir. Adjust the fluid level as necessary. Refer to „Checking and Adding Fluid" in this section.

Notice: Do not hold the steering wheel at a stop for any length of time as this can damage the power steering pump.

3. Start the engine. Turn the steering wheel counterclockwise and clockwise from stop to stop several times.
4. Find the exact area of the leak and repair it.

MAINTENANCE AND REPAIR

ON-VEHICLE SERVICE

BLEEDING THE POWER STEERING SYSTEM

If the power steering hydraulic system has been serviced, an accurate fluid level reading cannot be obtained until the air is bled from the system. Follow these steps to bleed the air from the system.

1. Turn the wheels all the way to the left and add the power steering fluid to the MIN mark on the fluid level indicator.

Notice: When adding fluid or making a complete fluid change, always use DEXRON® II or III power steering fluid. Failure to use the proper fluid will cause hose and seal damage and fluid leaks.

2. Start the engine. With the engine running at fast idle, recheck the fluid level. If necessary, add fluid to bring the level up to the MIN mark.
3. Bleed the system by turning the wheels from side to side without reaching the stop at either end. Keep the fluid level at the MIN mark. The air must be eliminated from the fluid before normal steering action can be obtained.
4. Return the wheels to the center position. Continue running the engine for 2 to 3 minutes.
5. Road test the car to be sure the steering functions normally and is free from noise.
6. Recheck the fluid level as described in steps 1 and 2. Make sure the fluid level is at the MAX mark after the system has stabilized at its normal operating temperature. Add fluid as needed.

CHECKING AND ADDING FLUID

Notice: When adding fluid or making a complete fluid change, always use DEXRON® II or III power steering fluid. Failure to use the proper fluid will cause hose and seal damage and fluid leaks.

1. The power steering fluid level is indicated either by marks on a see through fluid reservoir or by marks on a fluid level indicator on the fluid reservoir cap.
2. If the fluid is warmed up to 66°C (150°F), the fluid level should be between the MAX and MIN marks. Add fluid as needed.
3. If the fluid is cool, 21°C (70°F), the fluid level should be at the MIN mark. Add fluid as needed.

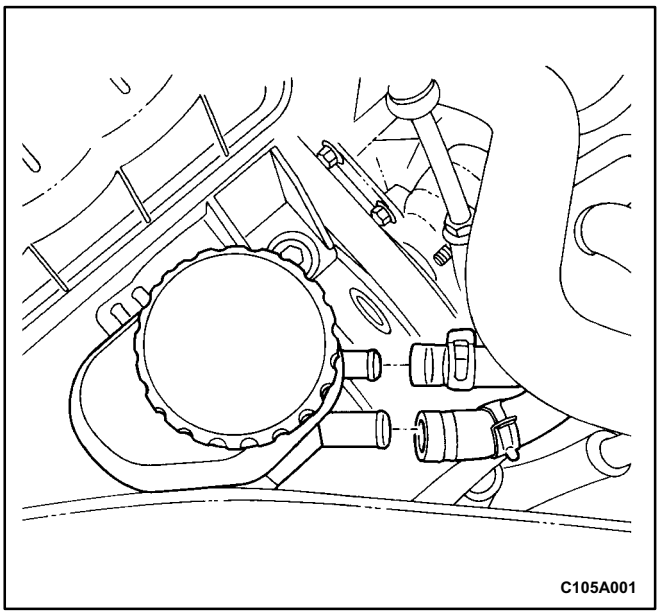

FLUID RESERVOIR

Removal Procedure

1. Siphon the power steering fluid from the fluid reservoir.
2. Loosen the hose clamps and remove both hoses from the fluid reservoir.

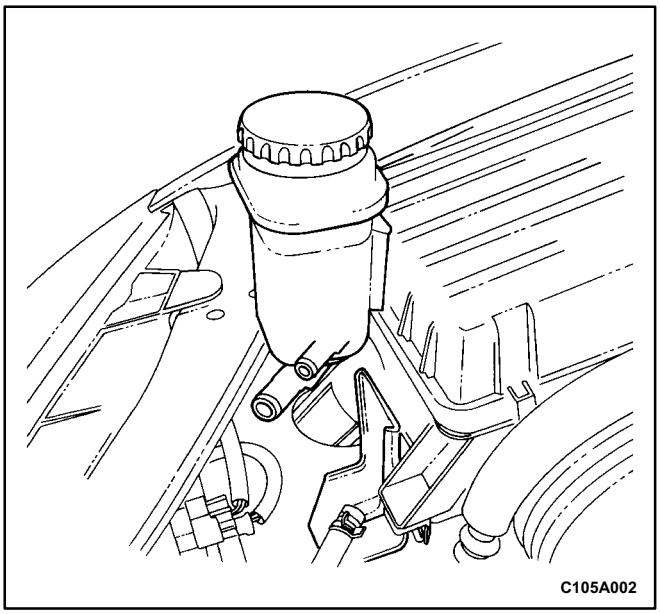

3. Remove the fluid reservoir by sliding it off the fluid reservoir bracket.

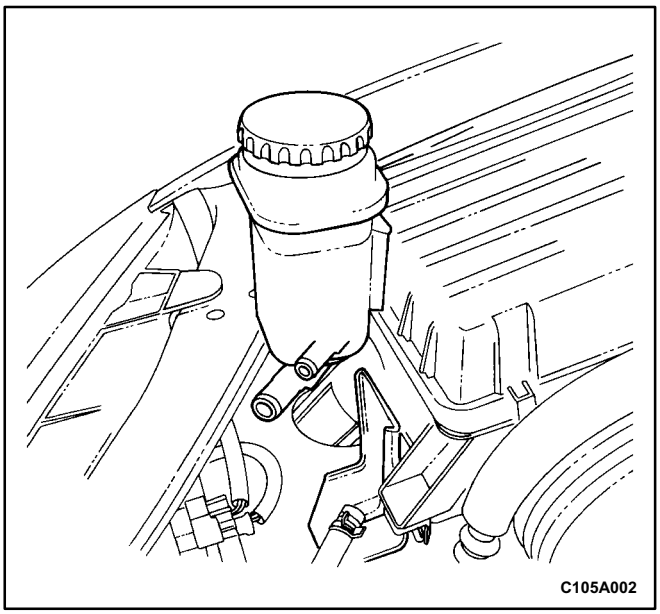

Installation Procedure

1. Attach the fluid reservoir to the fluid reservoir bracket.

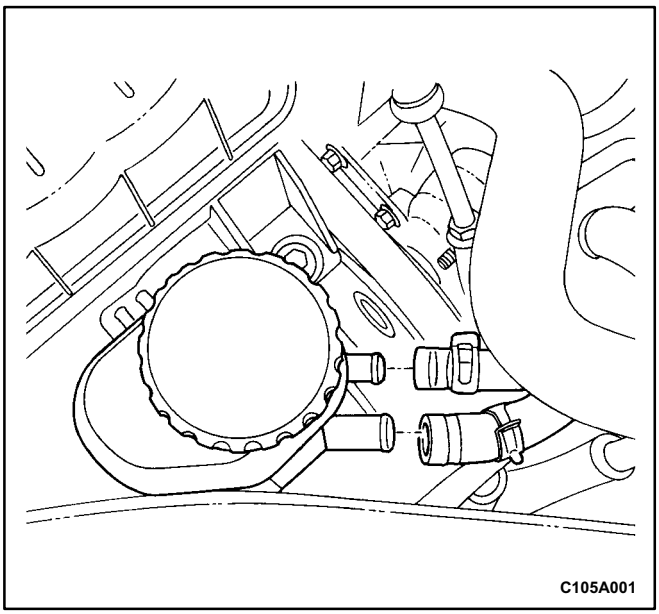

2. Connect both hoses to the fluid reservoir and secure the hose clamps.

Notice: When adding fluid or making a complete change, always use DEXRON® II or III power steering fluid. Failure to use the proper fluid will cause hose and seal damage and fluid leaks.

3. Fill the fluid reservoir with power steering fluid.
4. Inspect for leaks. If there are leaks, correct the cause of the leaks and bleed the system. Refer to „Bleeding the Power Steering System" in this section.

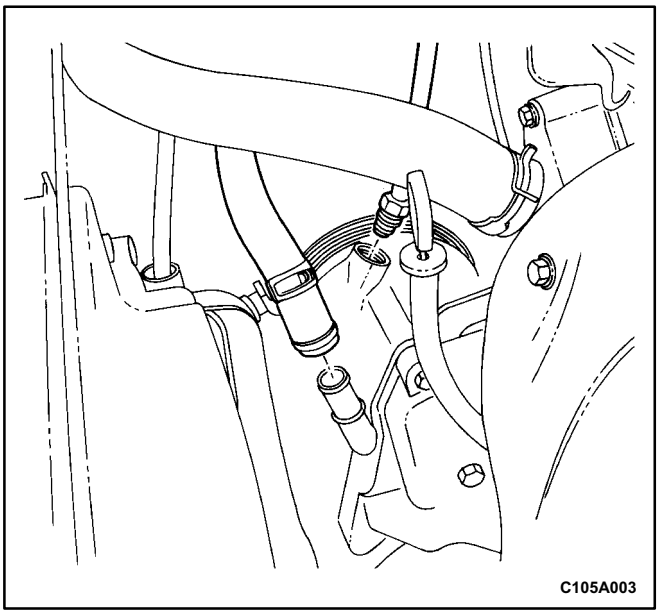

HOSES AND PIPES

Power Steering Pump Hoses and Pipes

(Left-Hand Drive Shown, Right-Hand Drive Similar)

Removal Procedure

1. Siphon the power steering fluid from the fluid reservoir.
2. Disconnect the pressure line pipe and the supply line hose from the inlet and outlet connections on the power steering pump.

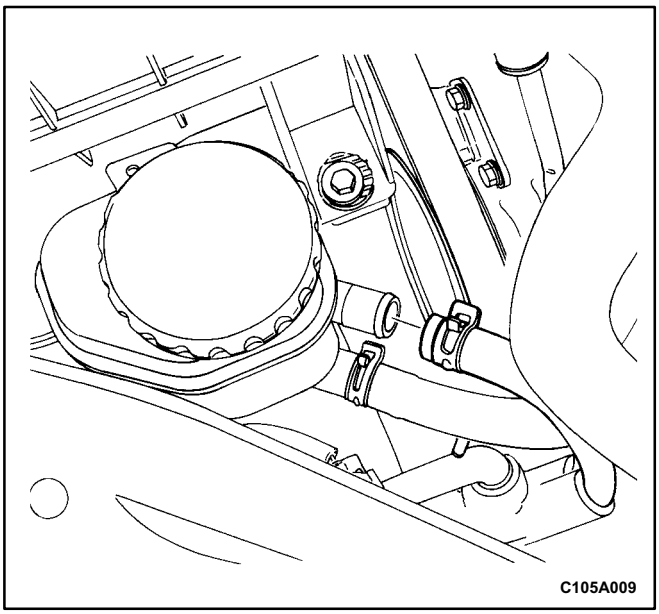

3. Disconnect the return line from the fluid reservoir.

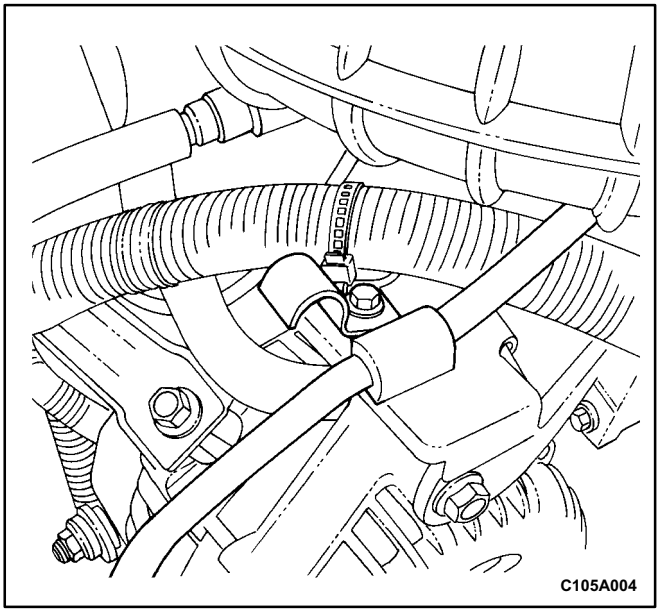

4. Loosen the retaining clip located above the alternator and position it away from the pressure line.

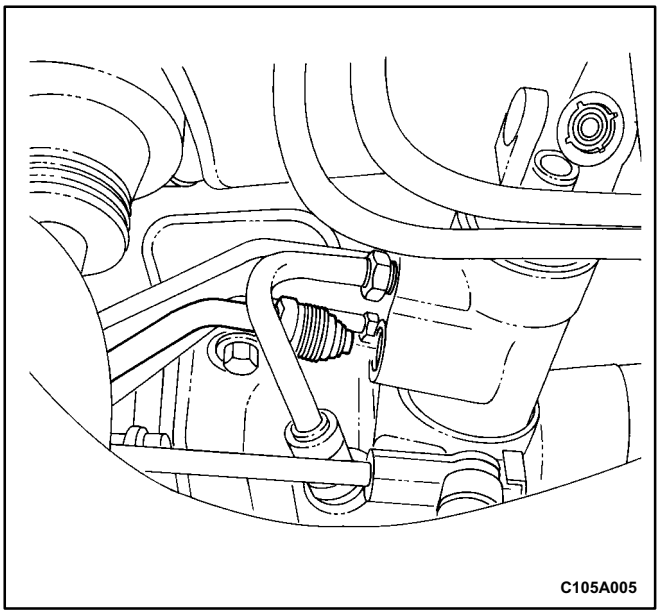

5. Raise and suitably support the vehicle.
6. Disconnect the pressure line from the power steering gear inlet.

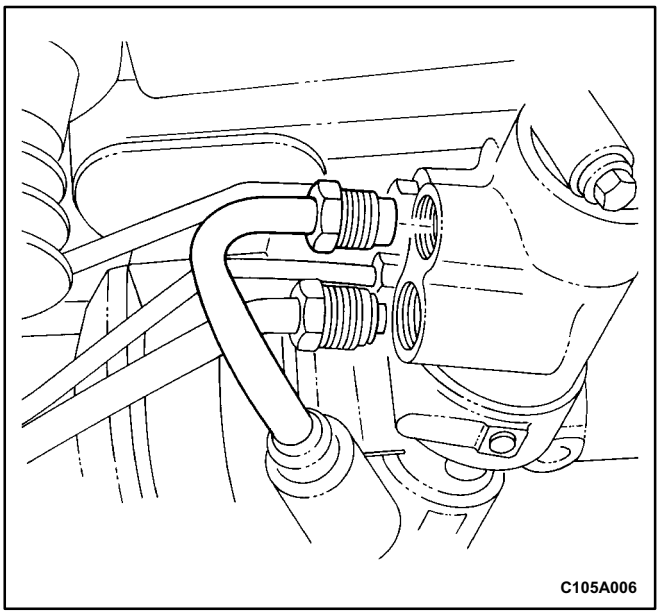

7. Disconnect the return line outlet pipe from the power steering gear.

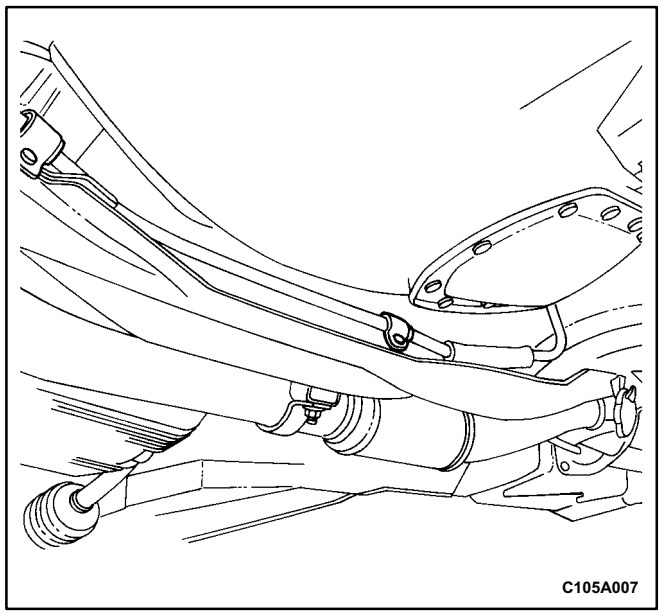

8. Remove the return line from the clips on the frame rail.

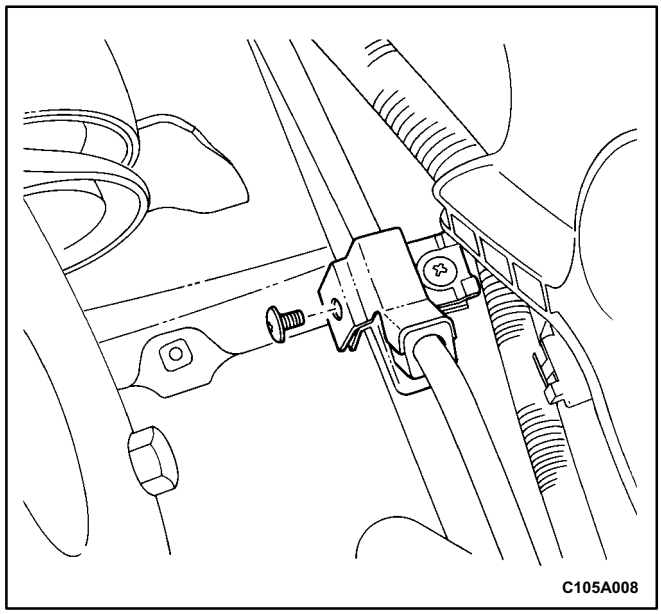

9. Remove the screw from each of the two clips on the radiator support rail.
10. Remove the two clips from the radiator support rail.
11. Remove the return line from the vehicle.
12. Lower the vehicle.
13. Remove the pressure line from the vehicle.

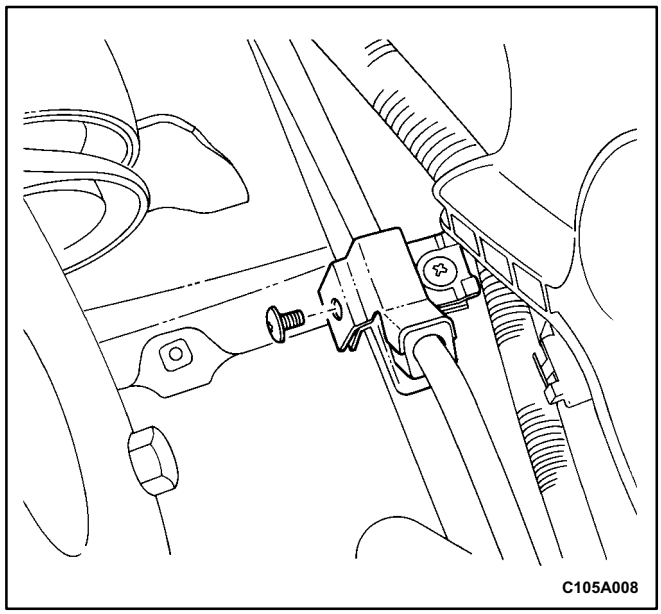

Installation Procedure

1. Route the pressure line from the power steering pump to the power steering gear.
2. Raise and suitably support the vehicle.
3. Route the return line from the fluid reservoir to the power steering gear.
4. Install the two clips on the radiator support rail.
5. Install the screw into each of the two clips.

Tighten

Tighten the return line clip screws to 3 N•m (27 lb•in).

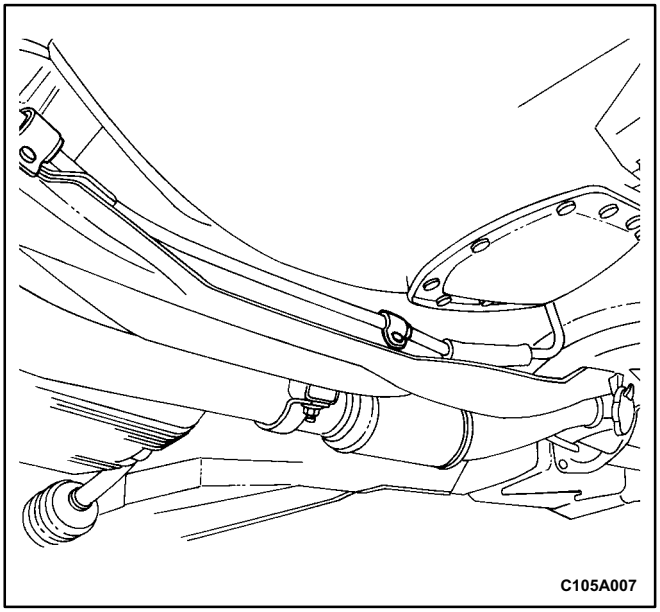

6. Install the return line into the clips on the frame rail.

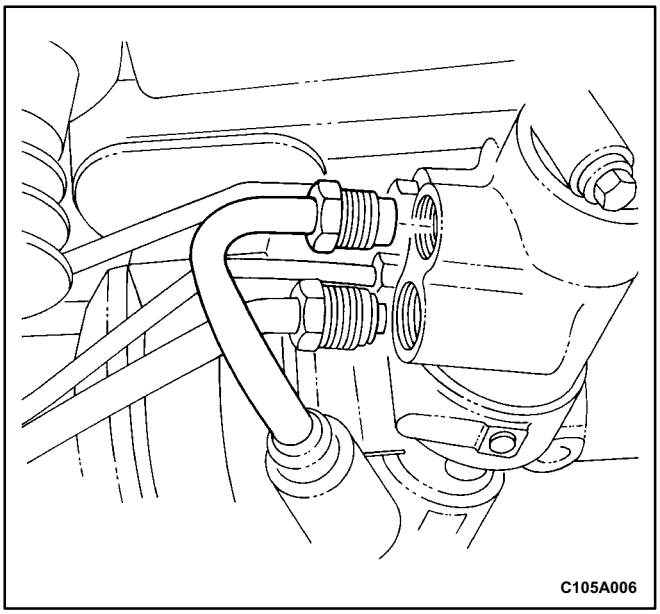

7. Connect the return line to the power steering gear outlet.

Tighten

Tighten the return line fitting to 27 N•m (20 lb•ft).

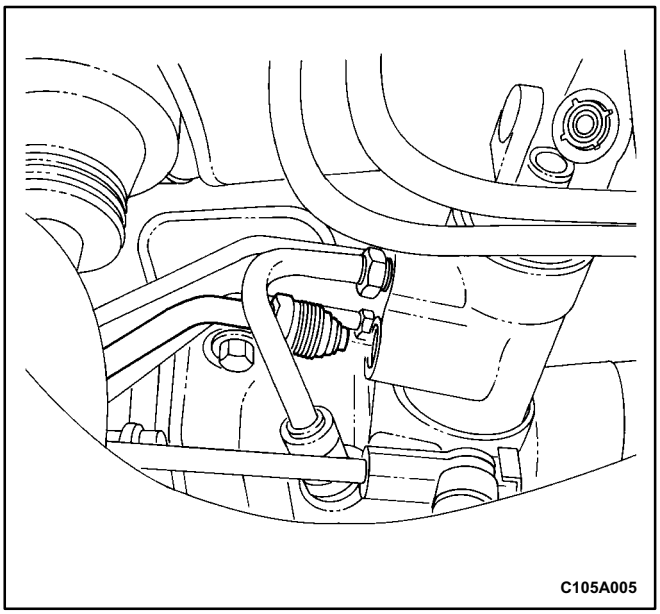

8. Connect the pressure line to the power steering gear inlet.

Tighten

Tighten the pressure line fitting to 27 N•m (20 lb•ft).

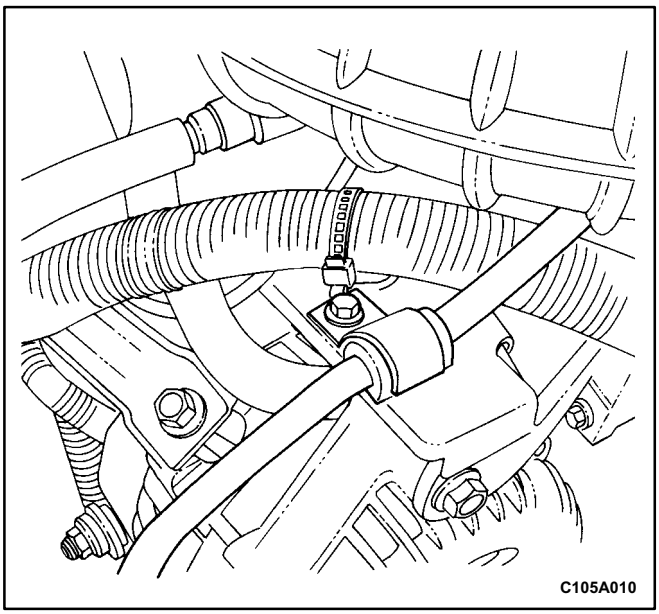

9. Lower the vehicle.
10. Secure the pressure line with the retaining clip located above the alternator.

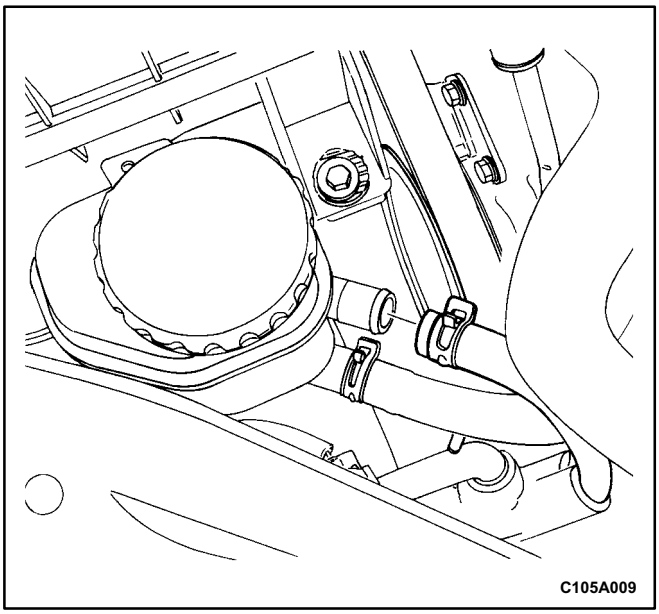

11. Connect the return line to the fluid reservoir.

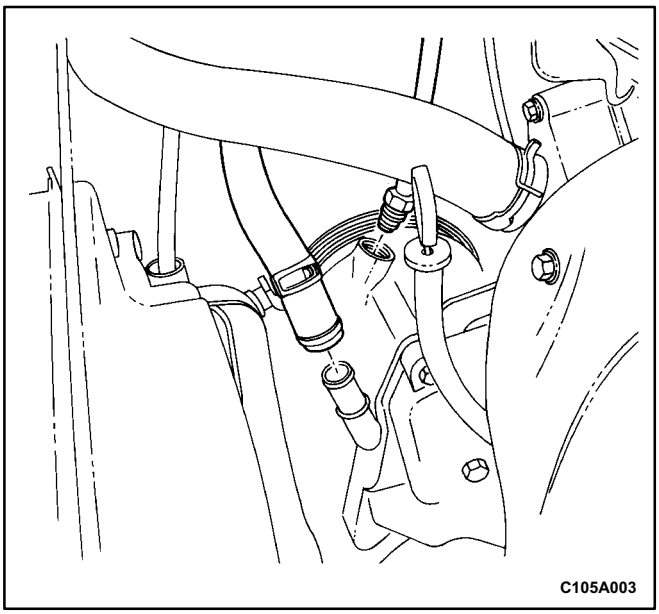

12. Connect the pressure line pipe and the supply line hose to the outlet and inlet connections on the power steering pump.

Tighten

Tighten the pressure line fitting to 27 N•m (20 lb•ft).

Notice: When adding fluid or making a complete change, always use DEXRON® II or III power steering fluid. Failure to use the proper fluid will cause hose and seal damage and fluid leaks.

13. Fill the fluid reservoir with power steering fluid.
14. Inspect for leaks. If there are leaks, correct the cause of the leaks and bleed the system. Refer to „Bleeding the Power Steering System" in this section.

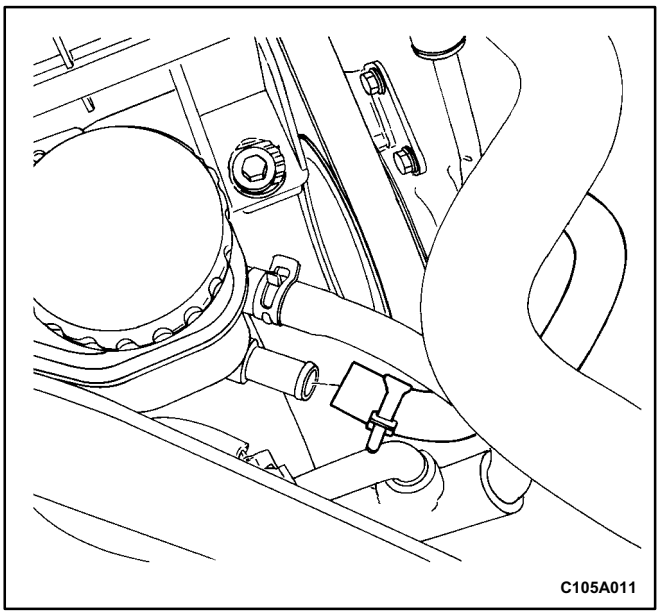

Power Steering Fluid Supply Hose

Removal Procedure

1. Siphon the power steering fluid from the fluid reservoir.
2. Disconnect the fluid supply hose at the fluid reservoir lower connection.

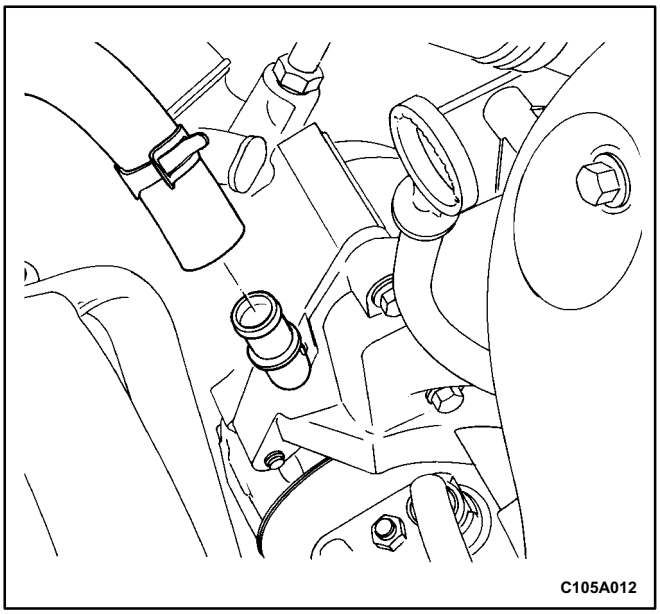

3. Disconnect the fluid supply hose from the power steering pump inlet. Use a rag to avoid any spillage.
4. Remove the power steering fluid supply hose.

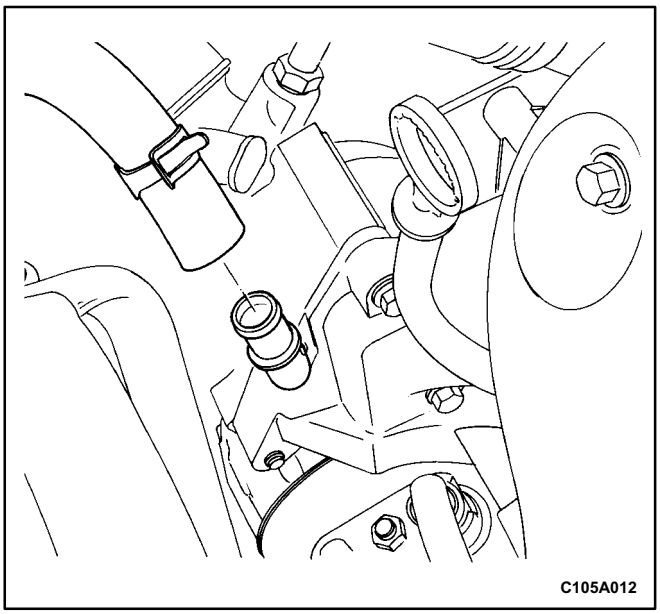

Installation Procedure

1. Install the power steering fluid supply hose.
2. Connect the fluid supply hose to the power steering pump inlet.

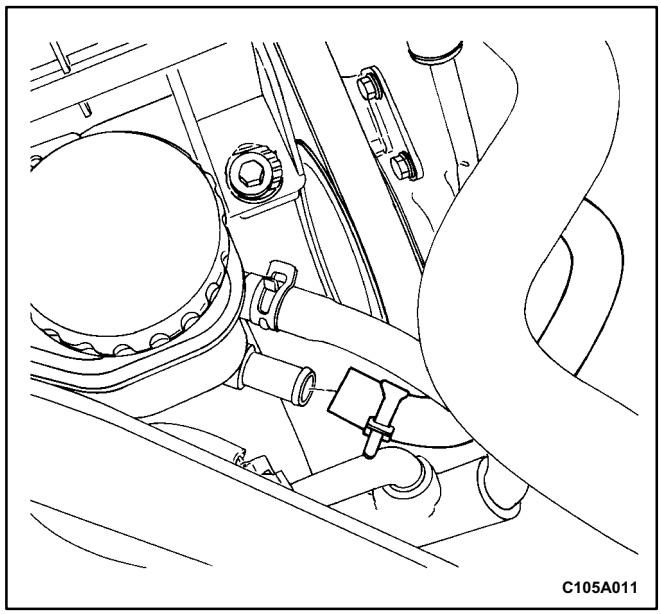

3. Connect the fluid supply hose to the fluid reservoir lower connection.

Notice: When adding fluid or making a complete change, always use DEXRON® II or III power steering fluid. Failure to use the proper fluid will cause hose and seal damage and fluid leaks.

4. Fill the fluid reservoir with power steering fluid.
5. Inspect for leaks. If there are leaks, correct the cause of the leaks and bleed the system. Refer to „Bleeding the Power Steering System” in this section.

GENERAL DESCRIPTION AND SYSTEM OPERATION

POWER STEERING SYSTEM

General Description

The power steering system consists of three components: the power steering pump, the power steering fluid reservoir and the the power steering rack and pinion gear. The power steering pump is a vane type pump providing hydraulic pressure for the system and is powered by the engine. It draws on the power steering fluid reservoir, which in turn is connected to the power steering gear. A pressure relief valve inside the flow control valve limits the pump pressure. The power steering rack and pinion gear has a rotary control valve which directs hydraulic fluid coming from the power steering pump to one side or the other side of the rack piston. The integral rack piston is attached to the rack. The rack piston converts hydraulic pressure to a linear force which moves the rack to the left or the right. The force is then transmitted through the inner and the outer tie rods to the steering knuckles, which turn the wheels.

SECTION 6B

POWER STEERING PUMP

TABLE OF CONTENTS

Specifications 6B-1
General Specifications 6B-1
Fastener Tightening Specifications 6B-1
Special Tools 6B-2
Special Tools Table 6B-2
Diagnosis 6B-2
Power Steering Pump Diagnosis 6B-2
Maintenance and Repair 6B-4
On-Vehicle Service 6B-4
Serpentine Accessory Drive Belt 6B-4
Pump Assembly 6B-6
Unit Repair 6B-10
Pump 6B-10
General Description and System Operation 6B-11
Power Steering Pump 6B-11

SPECIFICATIONS

GENERAL SPECIFICATIONS

Application		Description
Lubricant		Power Steering Fluid DEXRON® II or III
Pressure	- without EVO	8330 kPa ~ 8820 kPa (1208 psi ~ 1279 psi)
	- with EVO	8500 kPa ~ 8960 kPa (1233 psi ~ 1299 psi)

FASTENER TIGHTENING SPECIFICATIONS

Application	N•m	Lb•Ft	Lb•
Air Filter Housing Assembly Bolts	6	-	53
HighPressure Hose Fitting	28	21	-
Power Steering Pump Bolts	25	18	-
Power Steering Pump Pully Nut (without EVO)	61	44	-
Right Side Power Steering Pump Bracket Bolts	25	18	-

SPECIAL TOOLS

SPECIAL TOOLS TABLE

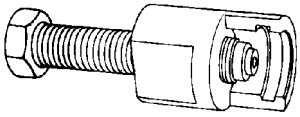 B105B001	**J-42467** **Power Steering Pump Pulley Remover**

DIAGNOSIS

POWER STEERING PUMP DIAGNOSIS

Foaming or Milky Power Steering Fluid (Air in Fluid)

Checks	Action
Check for internal leakage in the power steering pump, causing an overflow.	Repair the internal pump leakage. Bleed the system.
Check for a low fluid level.	Repair the internal pump leakage. Bleed the system. Cold temperatures will cause the air bubbles in the system if the fluid level is low.

Low Pressure Due to Power Steering Pump

Checks	Action
Check for an external leakage of the power steering pump at the seals.	Replace the seals. Repair the leak. Bleed the system.
Check for a worn serpentine accessory drive belt.	Replace the serpentine accessory drive belt.

Low Pressure Due to Power Steering Gear

Checks	Action
Check for a scored housing bore.	Replace the housing bore.
Check for leakage at the valve rings or the seals.	Repair the leak. Bleed the system.

Groaning Noise in the Power Steering Pump

Checks	Action
Check for air in the power steering fluid.	Perform the checks listed in „Foaming or Milky Power Steering Fluid (Air in Fluid)” above.
Check for a low level of power steering fluid.	Repair any internal or external leaks. Bleed the system.
Check for a loose mounting of the power steering pump.	Tighten the pump mounting to specifications.

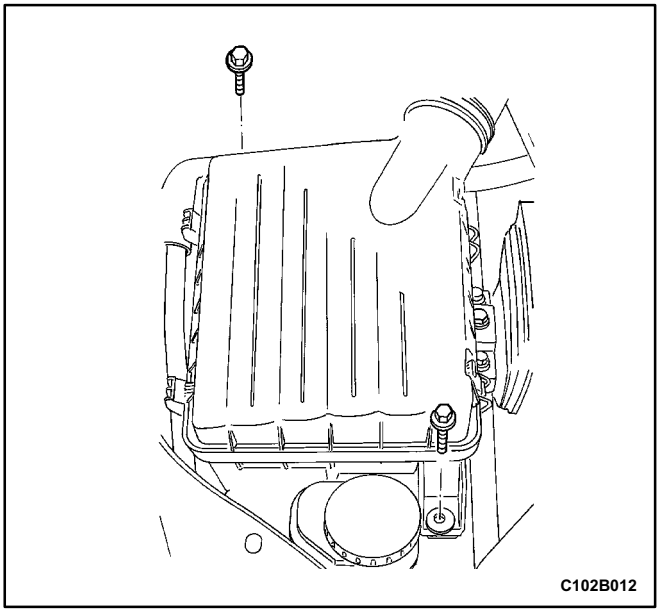

MAINTENANCE AND REPAIR

ON-VEHICLE REPAIR

SERPENTINE ACCESSORY DRIVE BELT

Removal Procedure

1. Remove the air filter housing assembly bolts and the air intake tube.
2. Remove the air filter housing assembly from the vehicle.

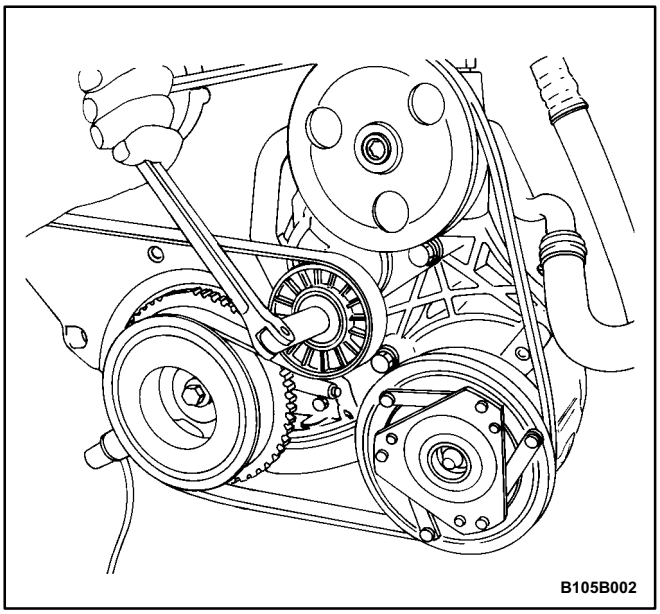

3. Use a wrench to turn the tensioner bolt clockwise, compressing the tensioner, and releasing the tension on the serpentine accessory drive belt.

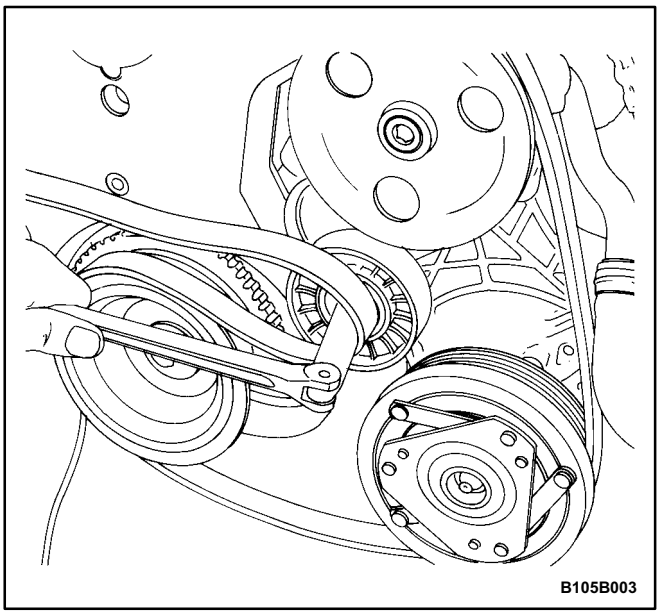

4. Remove the serpentine accessory drive belt.

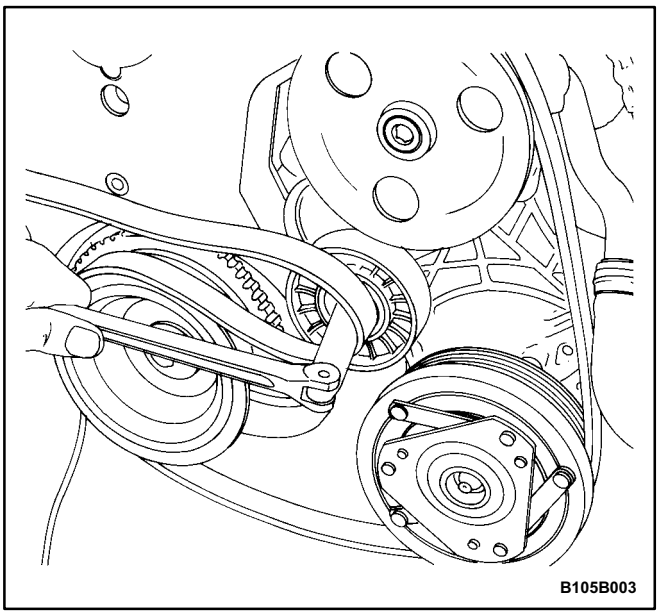

Installation Procedure

1. Use a wrench to turn the tensioner bolt clockwise, compressing the tensioner, and releasing the tension on the serpentine accessory drive belt.
2. With the wrench in place on the tensioner bolt, loop the serpentine accessory drive belt loosely over the pulleys.

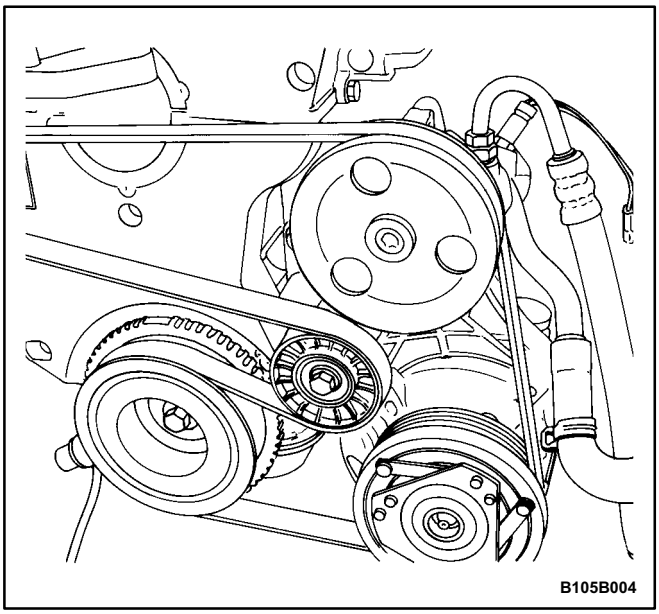

3. Slip the belt over the tensioner.
4. Remove the wrench from the tensioner bolt and the belt will tighten itself.

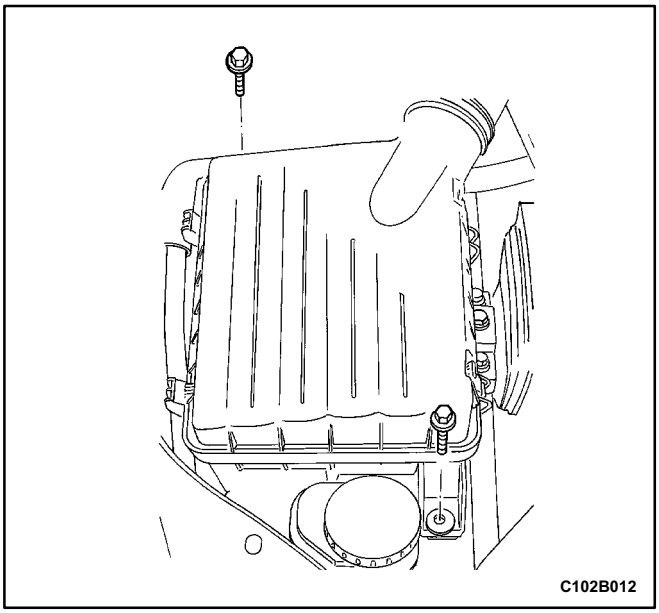

5. Install the air filter housing assembly into the vehicle.
6. Install the air intake tube and the air filter housing assembly bolts.

Tighten

Tighten the air filter housing assembly bolts to 6 N•m (53 lb•in).

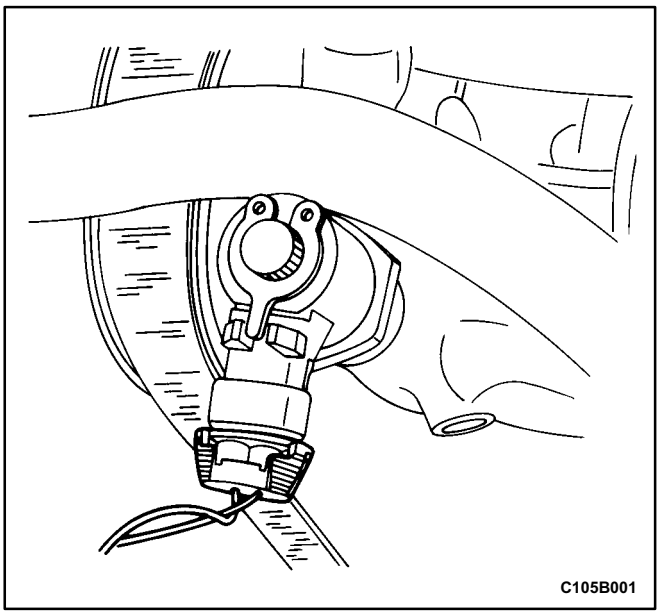

PUMP ASSEMBLY

Removal Procedure

1. Remove the serpentine accessory drive belt. Refer to „Serpentine Accessory Drive Belt” in this section.
2. Disconnect the electrical connector at the Electronic Variable Orifice (EVO) solenoid actuator.

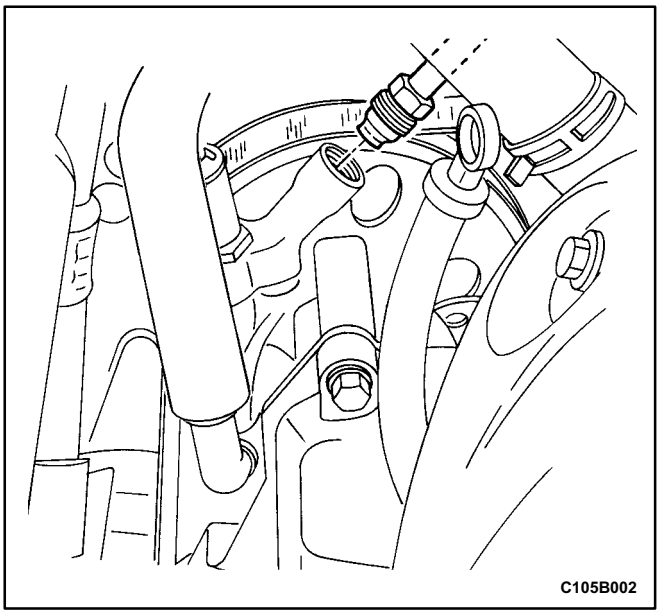

3. Position a drain pan to catch the power steering fluid that will drain from the high pressure hose after it is disconnected from the power steering pump.
4. Disconnect the highpressure hose from the power steering pump.

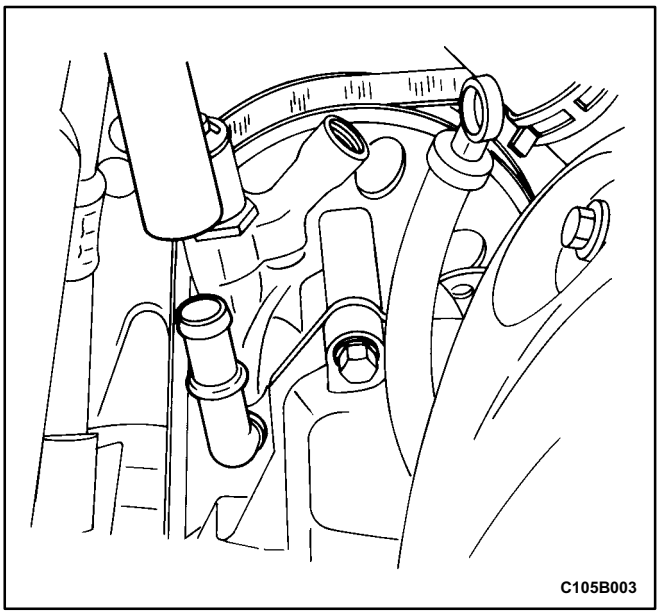

5. Position a drain pan to catch the power steering fluid that will drain from the supply hose after it is disconnected from the power steering pump.
6. Disconnect the supply hose from the power steering pump.

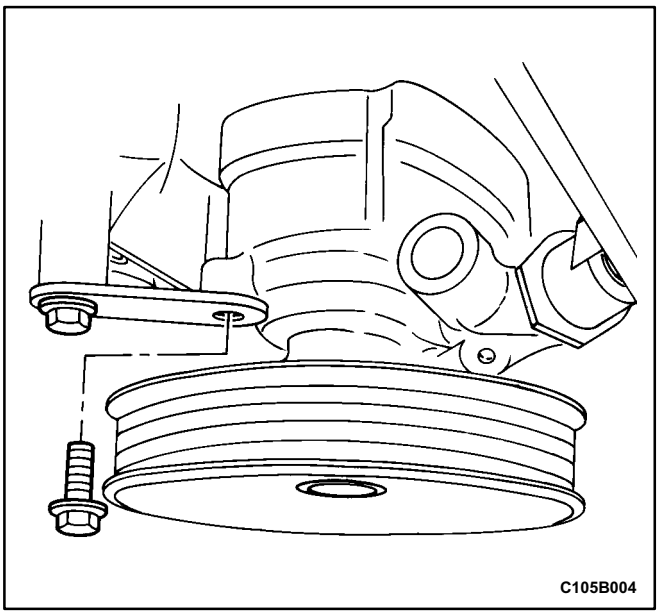

7. Remove the bolt from the front right side of the power steering pump. Loosen the rear right bolt and swing the bracket out of the way.

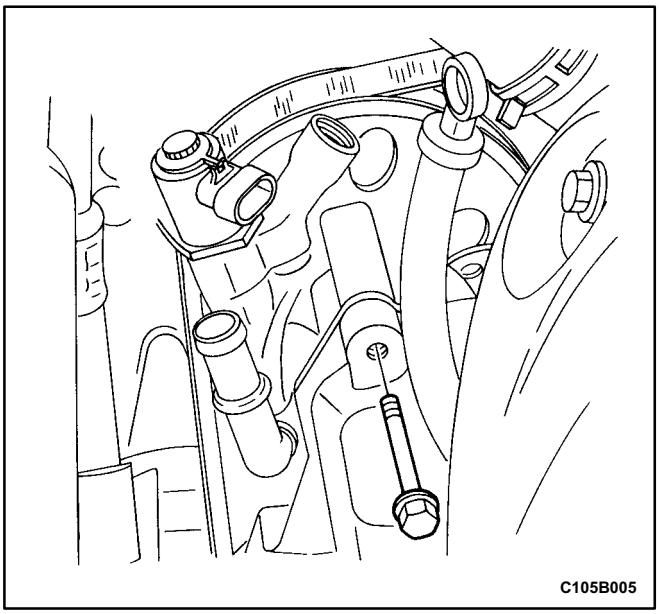

8. Remove the two long power steering pump bolts and remove the power steering pump from the vehicle.

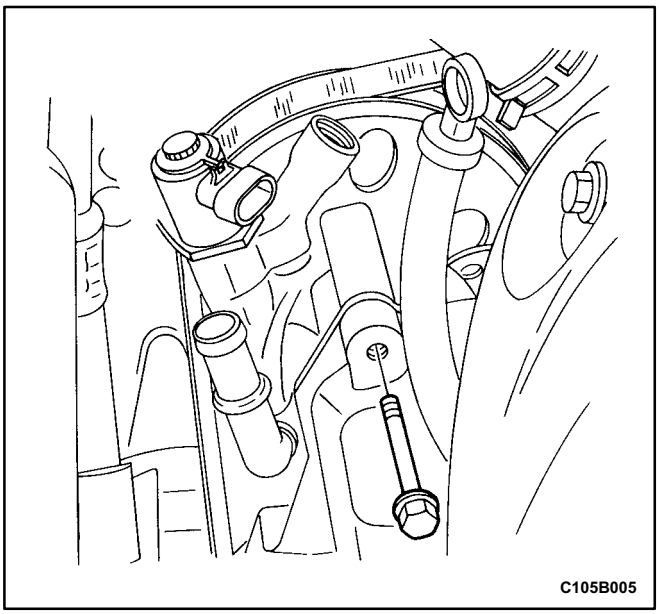

Installation Procedure

1. Install the power steering pump into the vehicle and install the two long power steering pump bolts.

   ### Tighten

   Tighten the two long power steering pump bolts to 25 N•m (18 lb•ft).

2. Swing the power steering pump bracket down and install the front right side bolt.

   ### Tighten

   Tighten the both of the right side power steering pump bracket bolts to 25 N•m (18 lb•ft).

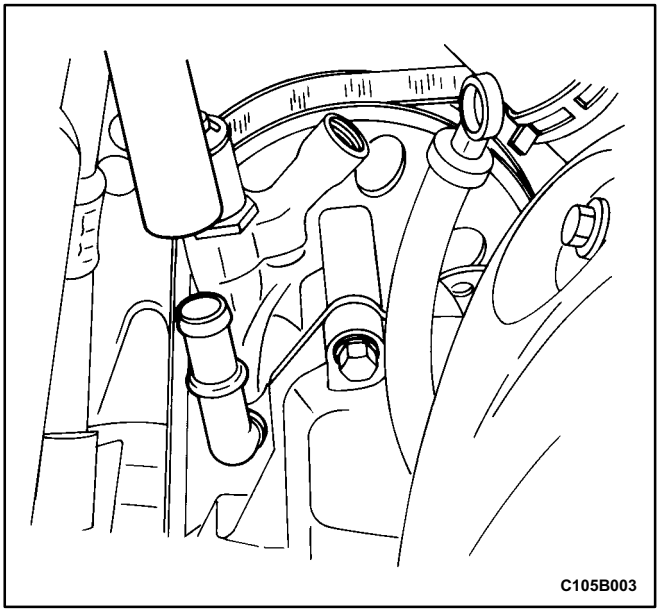

3. Connect the supply hose to the power steering pump.

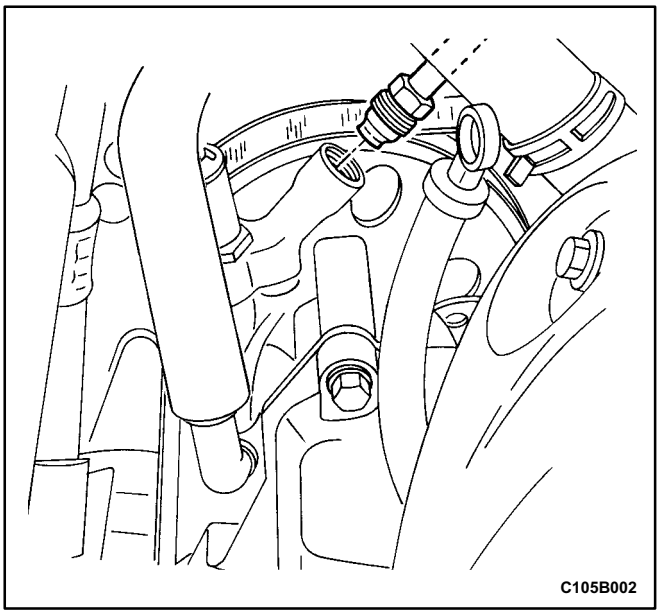

4. Connect the high pressure hose fitting to the power steering pump.

Tighten

Tighten the high-pressure hose fitting to 28 N•m (21 lb•ft).

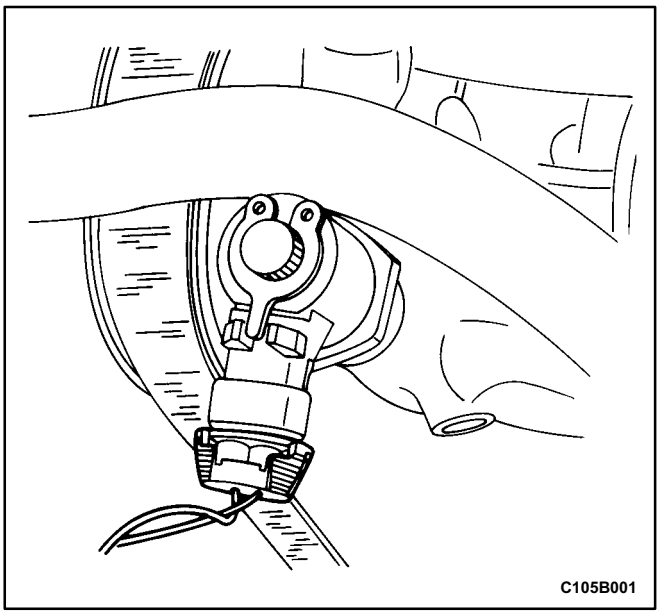

5. Connect the electrical connector at the Electronic Variable Orifice (EVO) solenoid actuator.

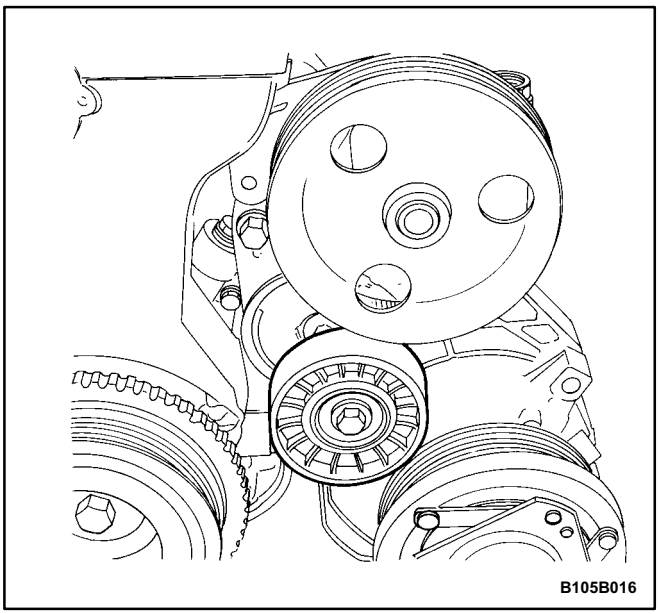

6. Install the serpentine accessory drive belt. Refer to „Serpentine Accessory Drive Belt” in this section.
7. Refill the power steering fluid. Refer to *Section 6A, Power Steering System.*
8. Bleed the power steering system. Refer to *Section 6A, Power Steering System.*

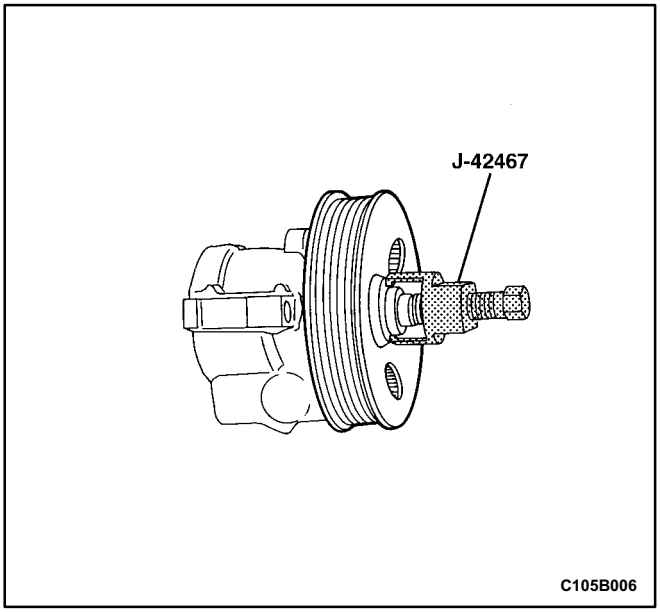

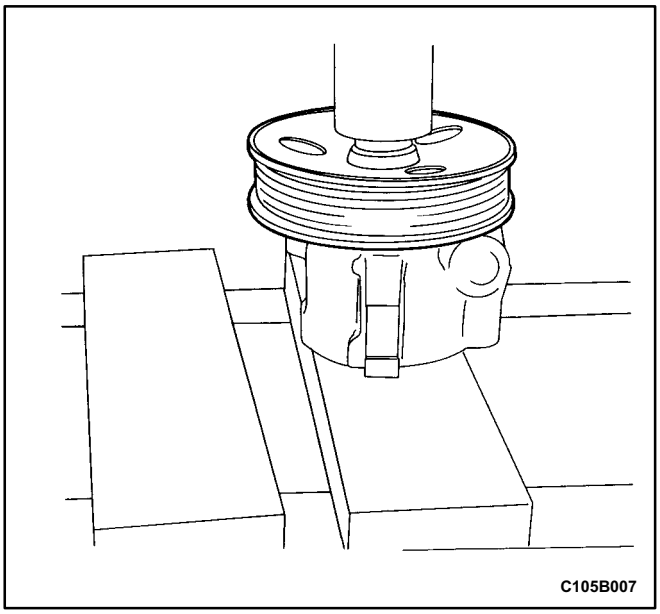

UNIT REPAIR

PUMP

Tools Required

J-42467 Power Steering Pump Pulley Remover

Disassembly Procedure

Important: The power steering pump in this vehicle is not serviceable. Replace, do not repair, a faulty power steering pump. Refer to „Power Steering Pump Diagnosis" in this section.

1. Remove the power steering pump from the vehicle if equiped EVO system. Refer to „Pump Assembly" in this section.
2. Using the power steering pump pulley remover J-42467, press the power steering pump from the pulley.
3. In case of without EVO system remove power steering pump pully nut (Do not remove the power steering pump from the vehicle).

Assembly Procedure

1. Press the power steering pump pulley onto the power steering pump using a hydraulic press if equiped EVO system.
2. Install the power steering pump onto the vehicle. Refer to „Pump Assembly" in this section.
3. Install the power steering pump pully nut (the vehicle is not equiped EVO system).

Tighten

Tighten the power steering pump pully nut to 61 N•m (44 lb•ft).

GENERAL DESCRIPTION AND SYSTEM OPERATION

POWER STEERING PUMP

The power steering pump is a multivaned hydraulic pump.

The serpentine accessory drive belt on the engine drives the power steering pump.

The power steering pump provides the hydraulic pressure to the power steering gear.

The power steering gear uses the hydraulic pressure to assist in steering the vehicle.

The power steering system uses a remote reservoir in order to make available more space in the engine compartment.

SECTION 6C

POWER STEERING GEAR

CAUTION: Disconnect the negative battery cable before removing or installing any electrical unit or when a tool or equipment could easily come in contact with exposed electrical terminals. Disconnecting this cable will help prevent personal injury and damage to the vehicle. The ignition must also be in LOCK unless otherwise noted.

TABLE OF CONTENTS

Specifications 6C-1
General Specifications 6C-1
Fastener Tightening Specifications 6C-2
Special Tools 6C-2
Special Tools Table 6C-2
Diagnosis 6C-3
Power Rack and Pinion Steering Gear 6C-3
Power Rack and Pinion Steering Gear Bench Testing 6C-5
Speed Sensitive Power Steering System 6C-6
Speed Sensitive Power Steering System Operating With Full Assist At All Times 6C-7
Speed Sensitive Power Steering System Operating With Decreased Assist At All Times 6C-9
Maintenance and Repair 6C-10
On-Vehicle Service 6C-10
Rack and Pinion Assembly 6C-10
Outer Tie Rod 6C-15
Inner Tie Rod 6C-17
Dust Boot 6C-19
Straight Ahead Check 6C-20
Intermediate Shaft and Dash Seal 6C-21
Hydraulic Cylinder Lines 6C-25
Speed Sensitive Power Steering Control Module 6C-26
Speed Sensitive Power Steering Control Module Bracket 6C-27
Unit Repair 6C-29
Rack and Pinion 6C-29
Stub Shaft Seals and Upper and Lower Bearing 6C-34
Rack Bearing 6C-38
Rack Bearing Preload Adjustment 6C-40
Valve and Pinion 6C-40
General Description and System Operation 6C-44
Power Rack and Pinion 6C-44
Speed Sensitive Power Steering System 6C-44

SPECIFICATIONS

GENERAL SPECIFICATIONS

Application	Description
Capacity	1.0 Liter (1.06 qt)
Lubricant	Power Steering Fluid DEXRON® II or III

FASTENER TIGHTENING SPECIFICATIONS

Application	N•m	Lb•Ft	Lb•In
Adjuster Plug	12	-	106
Adjuster Plug Locknut	75	56	-
Control Module Bracket Bolts	7	-	62
Dash Seal Retaining Ring Nuts	7	-	62
Hydraulic Cylinder Line Fittings - Cylinder End	27	20	-
Hydraulic Cylinder Line Fittings - Valve End	18	13	-
Inner Tie Rod	100	74	-
Intermediate Shaft Pinch Bolts	25	18	-
Outer Tie Rod Adjusting Nut	64	47	-
Outer Tie Rod Nuts	50	37	-
Pinion Locknut	30	22	-
Pinion Preload	1	-	9
Steering Gear Inlet and Outlet Pipe Fittings	28	21	-
Steering Gear Mounting Bracket Nuts and Bolts	60	44	-
Transaxle Center BrackettoEngine Bolt	90	66	-

SPECIAL TOOLS

SPECIAL TOOLS TABLE

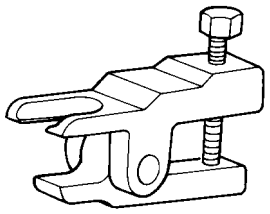 A106C034	**KM-507-B Ball Joint Remover**
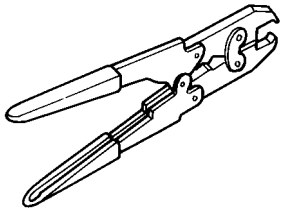 A104A008	**KM-J-22610 Installer**

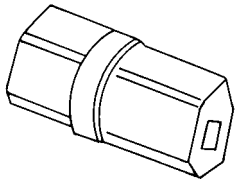 C105C001	**J-42459 Rack Guide Spring Cap Wrench**

DIAGNOSIS

POWER RACK AND PINION STEERING GEAR

Hissing Noise

Checks	Action
Check the intermediate shaft joints for looseness.	Tighten the intermediate shaft joints.
Check the power steering hose for contact with other components.	Be sure the power steering hose is correctly fitted into the hose clips.

Rattling Noise in Steering Gear

Checks	Action
Check the power steering hose for contact with the body.	Be sure the power steering hose is correctly fitted into the hose clips.
Check the steering gear for insufficient lubrication.	Lubricate the steering gear.
Check the steering gear mounting for improper installation.	Tighten the steering gear mounting bracket nuts and bolts.
Check the outer tie rods for improper installation.	Tighten the outer tie rod joints. Replace the outer tie rods.

Poor Return of Steering Wheel to Center

Checks	Action
Check the steering wheel for contact with the turn signal housing.	Adjust the turn signal housing.
Check the intermediate shaft joints for binding or looseness.	Replace the intermediate shaft.
Check the power steering pump flow control valve for sticking and improper alignment.	Replace the power steering pump.
Check the wheel alignment.	Align the wheels.
Check the wheel bearings for wear or damage.	Replace the wheel bearings.
Check the intermediate shaft joints for improper installation.	Adjust the intermediate shaft between the steering gear and the steering column. Replace the intermediate shaft.
Check the outer tie rods and the ball joints for binding or looseness.	Tighten the tie rods and the ball joints. Replace the tie rods and the ball joints.
Check the steering gear adjustments.	Perform a straightāhead check.
Check the steering column shaft seal for rubbing on the shaft.	Replace the dash seal.
Check the steering shaft bearings for binding.	Replace the stub shaft bearings.

Momentary Increase in Effort When Turning the Wheel Quickly

Checks	Action
Check the power steering pump for internal leaks.	Replace the power steering pump.
Check the hoses for damage or restricted flow.	Replace the power steering hoses and/or pipes.
Check the power steering fluid level.	Fill the power steering fluid reservoir.
Check the power steering pump flow control valve for sticking and improper operation.	Replace the power steering pump.

Steering Surges or Jerks When Turning with Engine Running

Checks	Action
Check the power steering pump for insufficient pressure.	Replace the power steering pump.
Check the power steering pump flow control valve for sticking and improper operation.	Replace the power steering pump.
Check the power steering pump serpentine belt for slippage.	Tighten the power steering serpentine belt.
Check for air contamination in the power steering system.	Bleed the power steering system.

Steering Vibrates During Low Speed or Static Steering

Checks	Action
Check for air contamination in the power steering system.	Bleed the power steering system.
Check the power steering pump serpentine belt for looseness.	Tighten the power steering serpentine belt.

Excessive Wheel Kickback or Loose Steering

Checks	Action
Check for air contamination in the power steering system.	Bleed the power steering system.
Check the wheel bearings for wear or damage.	Replace the wheel bearings.
Check the steering gear mounting for improper installation.	Tighten the steering gear mounting bracket nuts and bolts.
Check the intermediate shaft joints for improper installation.	Adjust the intermediate shaft between the steering gear and the steering column. Replace the intermediate shaft.
Check the outer tie rods and ball joints for looseness.	Tighten the tie rods and the ball joints. Replace the tie rods and the ball joints.

Hard Steering or Lack of Assist (Especially During Parking)

Checks	Action
Check the intermediate shaft joints for improper installation.	Adjust the intermediate shaft between the steering gear and the steering column. Replace the coupling flange.
Check the power steering pump flow control valve for sticking and improper installation.	Replace the power steering pump.
Check the power steering pump for insufficient pressure.	Replace the power steering pump.
Check the power steering pump for internal leaks.	Replace the power steering pump.
Check for a loose or a worn intermediate shaft.	Tighten the intermediate shaft. Replace the intermediate shaft as needed.
Check the power steering pump serpentine belt tension.	Tighten the power steering serpentine belt.

POWER RACK AND PINION STEERING GEAR BENCH TESTING

Removal, Setup and Testing Procedure

Notice: Pressure checks or pressure and flow checks may also be conducted using this set up.

1. Disconnect and remove the power steering gear. Refer to „Rack and Pinion Assembly” in this section.
2. Place the power steering gear on a bench next to the vehicle.
3. Disconnect the pressure line at the point where the hose connects to the pipe. Extend this line in order to reach the power steering gear on the bench.
4. Disconnect the return line from the the power steering fluid reservoir. Extend this line in order to reach the power steering gear on the bench.
5. Connect the power steering pipes to the power steering gear.
6. Start the engine and allow it to idle for 10 seconds.
7. Check the power steering fluid level. Refer to *Section 6A, Power Steering System*.
8. Start the engine and turn the rack and pinion stub shaft to a full turn in each direction. Hold the shaft against each stop for 5 seconds.
9. Inspect for possible leak points. Refer to *Section 6A, Power Steering System*.

Installation Procedure

1. Stop the engine.
2. Disconnect the power steering pipes from the power steering gear.
3. Remove the extensions and reconnect the pressure and return lines.
4. Install and connect the power steering gear. Refer to „Rack and Pinion Assembly” in this section.
5. Start the engine and allow if to idle for 10 seconds.
6. Check the power steering fluid level. Refer to *Section 6A, Power Steering System*.

SPEED SENSITIVE POWER STEERING SYSTEM

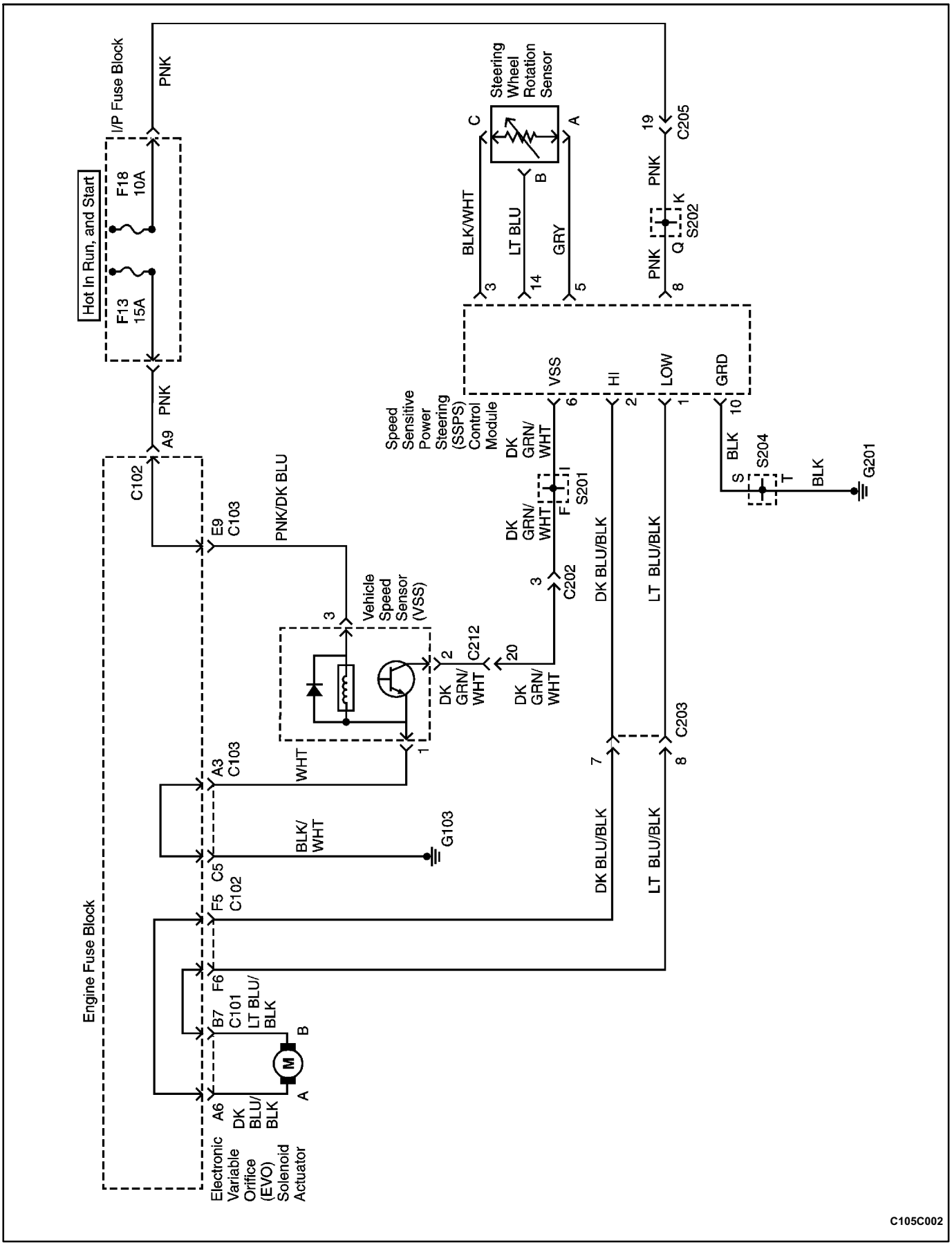

SPEED SENSITIVE POWER STEERING SYSTEM OPERATING WITH FULL ASSIST AT ALL TIMES

Step	Action	Value(s)	Yes	No
1	Perform an initial inspection of the power steering system. Is the system operational?	-	Go to *Step 2*	Go to *Section 6A, Power Steering System*
2	Check the speedometer. Is the speedometer inoperative?	-	Go to *Section 5, Transaxle*	Go to *Step 3*
3	Check the diagnostic trouble codes at the engine control module (ECM). Is the ECM code 24 set?	-	Go to *Section 1F, Engine Controls*	Go to *Step 4*
4	1. Turn the ignition ON. 2. Disconnect the electronic variable orifice (EVO) solenoid actuator electrical connector at the power steering pump. 3. Probe terminal A of the EVO actuator connector with a voltmeter. Does the voltmeter display the specified value?	≈ 3 V	Go to *Step 6*	Go to *Step 5*
5	Repair the open or short in the circuit between terminal A of the EVO solenoid actuator electrical connector and terminal 2 on the speed sensitive power steering (SSPS) control module connector. Is the repair complete?	-	System OK	-
6	1. Remove the EVO solenoid actuator from the power steering pump. 2. Turn the actuator upside down to position the pintle. 3. Stimulate the actuator by connecting it to the battery. Does the actuator click?	-	Go to *Step 8*	Go to *Step 7*
7	Replace the EVO solenoid actuator. Is the repair complete?	-	System OK	-
8	1. Turn the ignition OFF. 2. Remove the SSPS control module from the control module bracket. 3. Disconnect the SSPS control module connector. 4. Connect a test light from terminal 8 on the SSPS control module connector to the ground. 5. Turn the ignition ON. Is the test light on?	-	Go to *Step 14*	Go to *Step 9*
9	Check the ignition fuse. Is the ignition fuse open?	-	Go to *Step 10*	Go to *Step 11*
10	Replace the ignition fuse. Is the repair complete	-	System OK	-
11	Check for an open or short in the circuit between terminal 8 of the control module connector and the I/P fuse block. Is the connection faulty?	-	Go to *Step 12*	Go to *Step 13*
12	Repair the open or short in the circuit between terminal 8 of the SSPS control module connector and the I/P fuse block. Is the repair complete?	-	System OK	-

SPEED SENSITIVE POWER STEERING SYSTEM OPERATING WITH FULL ASSIST AT ALL TIMES (Cont'd)

Step	Action	Value(s)	Yes	No
13	Repair the power feed to the ignition fuse F18. Is the repair complete?	-	System OK	-
14	1. Turn the ignition OFF. 2. Connect a test light from terminal 10 of the SSPS control module connector to B+. Is the test light on?	-	Go to *Step 16*	Go to *Step 15*
15	Repair the open in the ground circuit between terminal 10 of the SSPS control module connector and G201. Is the repair complete?	-	System OK	-
16	Check for a short to B+ or an open in the circuit between terminal 1 of the SSPS control module connector and terminal B of the EVO solenoid actuator connector. Is the connection faulty?	-	Go to *Step 17*	Go to *Step 18*
17	Repair the short to B+ or an open in the circuit between terminal 1 of the SSPS control module connector and terminal B of the EVO solenoid actuator connector. Is the repair complete?	-	System OK	-
18	1. Disconnect the steering wheel rotation sensor. 2. Turn the ignition ON. 3. Check for an open, short to ground, short to B+, or poor terminal contact between terminal 5 of the SSPS control module connector and terminal A of the steering wheel rotation sensor connector. Is the connection faulty?	-	Go to *Step 19*	Go to *Step 20*
19	Repair the open, short to ground, short to B+, or poor terminal contact between terminal 5 of the SSPS control module connector and terminal A of the steering wheel rotation sensor connector. Is the repair complete?	-	System OK	-
20	Check for an open between terminal 3 of the SSPS control module connector and terminal C of the steering wheel rotation sensor connector. Is the connection faulty?	-	Go to *Step 21*	Go to *Step 22*
21	Repair the open between terminal 3 of the SSPS control module connector and terminal C of the steering wheel rotation sensor connector. Is the repair complete?	-	System OK	-
22	Check for an open, short to ground, short to B+, or poor terminal contact between terminal 14 of the SSPS control module connector and terminal B of the steering wheel rotation sensor connector. Is the connection faulty?	-	Go to *Step 23*	Go to *Step 24*
23	Repair the open, short to ground, short to B+, or poor terminal contact between terminal 14 of the SSPS control module connector and terminal B of the steering wheel rotation sensor connector. Is the repair complete?	-	System OK	-

SPEED SENSITIVE POWER STEERING SYSTEM OPERATING WITH FULL ASSIST AT ALL TIMES (Cont'd)

Step	Action	Value(s)	Yes	No
24	1. Turn the ignition OFF. 2. Connect the SSPS control module. 3. Connect the steering wheel rotation sensor. 4. Turn the ignition ON. 5. Backprobe with a voltmeter from terminal 5 on the control module connector to the ground. 6. Rotate the steering wheel quickly in both directions. Does the voltage show an increase and decrease from the specified value?	≈ 3 V	Go to *Step 25*	Go to *Step 26*
25	Replace the SSPS control module. Is the repair complete?	-	System OK	-
26	Replace the steering wheel rotation sensor. Is the repair complete?	-	System OK	-

SPEED SENSITIVE POWER STEERING SYSTEM OPERATING WITH DECREASED ASSIST AT ALL TIMES

Step	Action	Value(s)	Yes	No
1	Check the speedometer. Is speedometer inoperative?	-	Go to *Section 5, Transaxle*	Go to *Step 2*
2	Disconnect the EVO solenoid actuator at the power steering pump. Is the symptom still present?	-	Go to *Section 6A, Power Steering System*	Go to *Step 3*
3	Replace the speed sensitive poser steering (SSPS) control module. Is repair complete?	-	System OK	-

MAINTENANCE AND REPAIR
ON-VEHICLE SERVICE

RACK AND PINION ASSEMBLY

(Left-Hand Drive Shown, Right-Hand Drive Similar)

Tools Required

KM-507-B Ball Joint Remover

Removal Procedure

1. Disconnect the negative battery cable.
2. Raise and suitably support the vehicle.
3. Remove the wheels. Refer to *Section 2E, Tires and Wheels.*
4. Disconnect the power steering gear fluid outlet pipe. Place a drain pan under the steering gear to catch the power steering fluid.

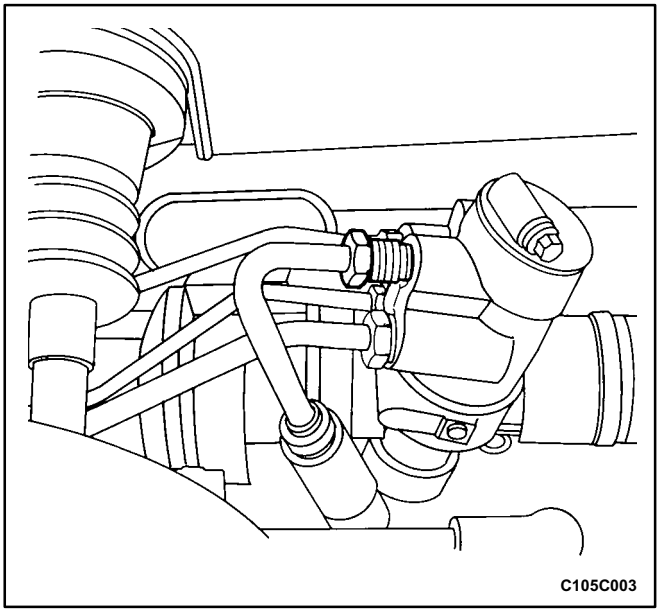

5. Disconnect the power steering gear fluid inlet pipe.

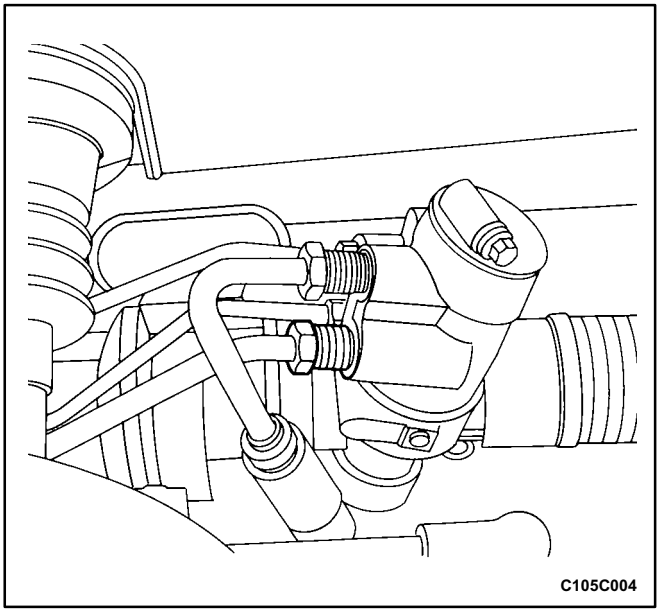

6. Position the steering gear straight ahead by turning the steering wheel until the steering wheel spokes are vertical and pointed to the left.
7. Scribe a mark on the stub shaft housing that lines up with a mark on the intermediate shaft lower coupling.

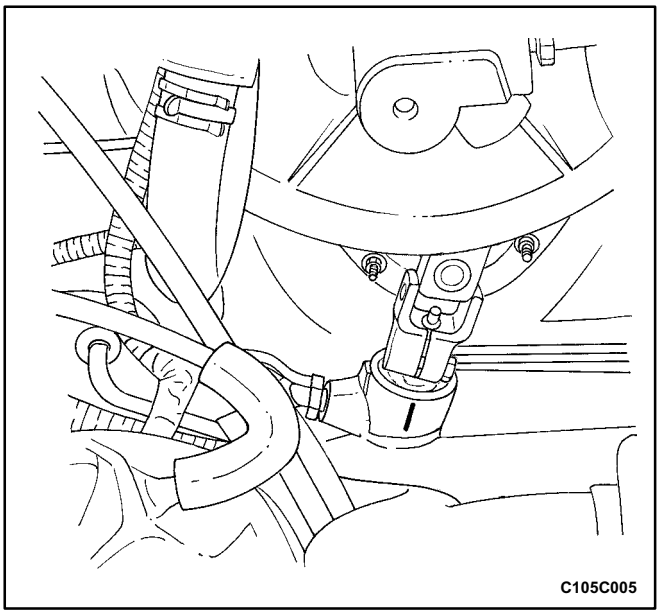

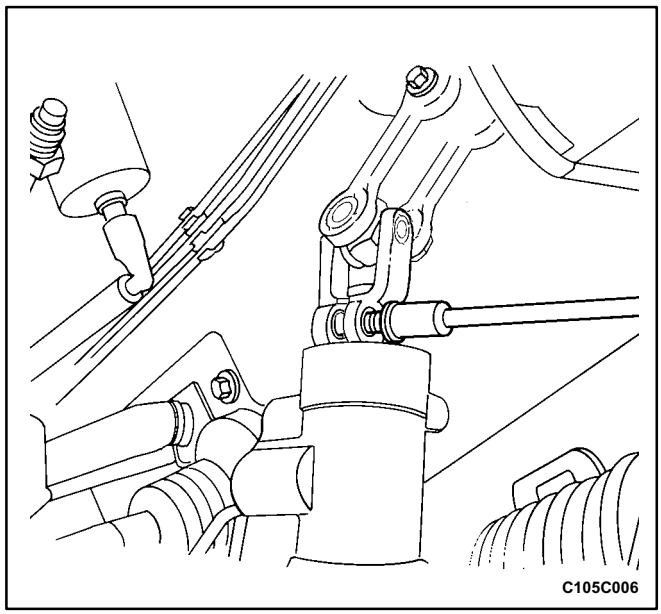

8. Remove the intermediate shaft pinch bolt.

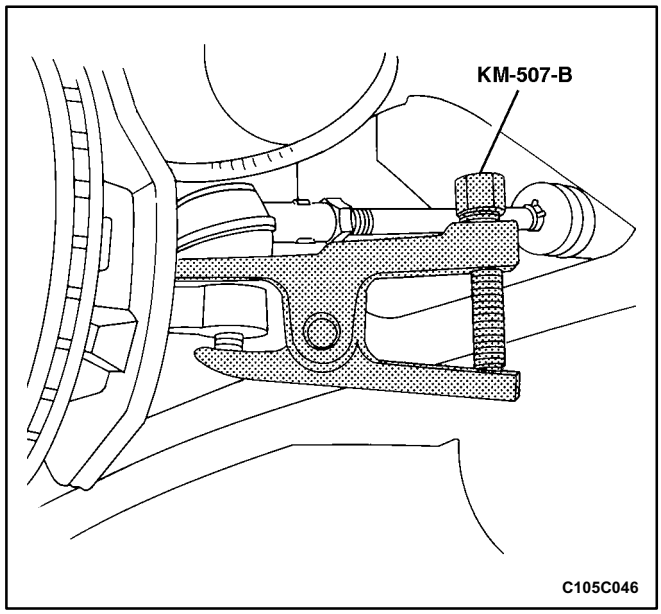

9. Remove the outer tie rod nuts and disconnect the tie rod ends from the strut assembly using the ball joint remover KM-507-B.

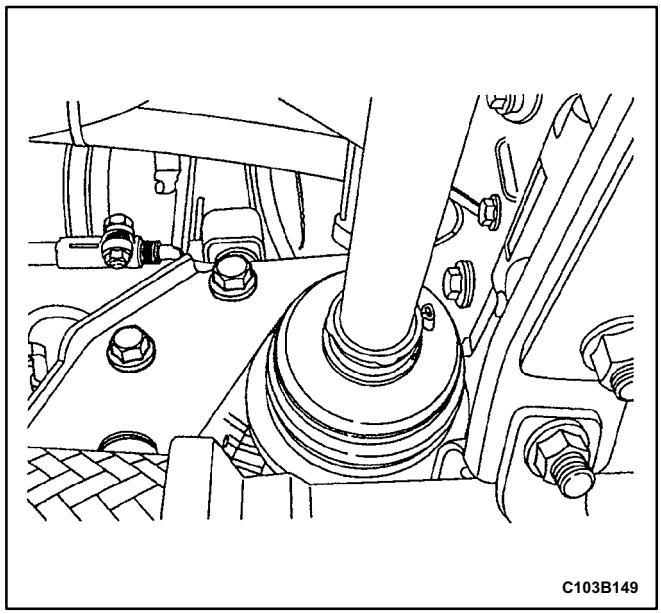

10. Remove the center member. Refer to *Section 9N, Frame and Underbody*.
11. On vehicles equipped with an automatic transaxle, remove the transaxle center bracket. Refer to *Section 5A, ZF 4 HP 14 Automatic Transaxle*.
12. On vehicles equipped with a manual transaxle, remove the bolts securing the transaxle center bracket to the transaxle and the engine. Move the transaxle center bracket out of the way.

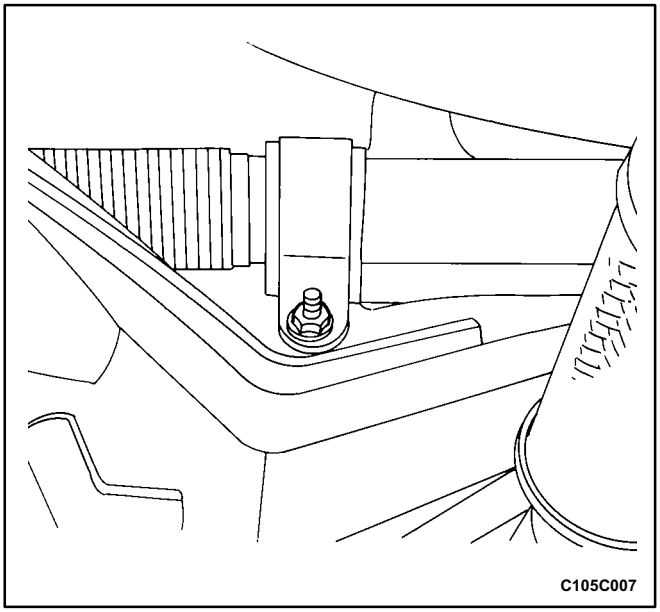

13. Remove the nuts from the steering gear mounting brackets.

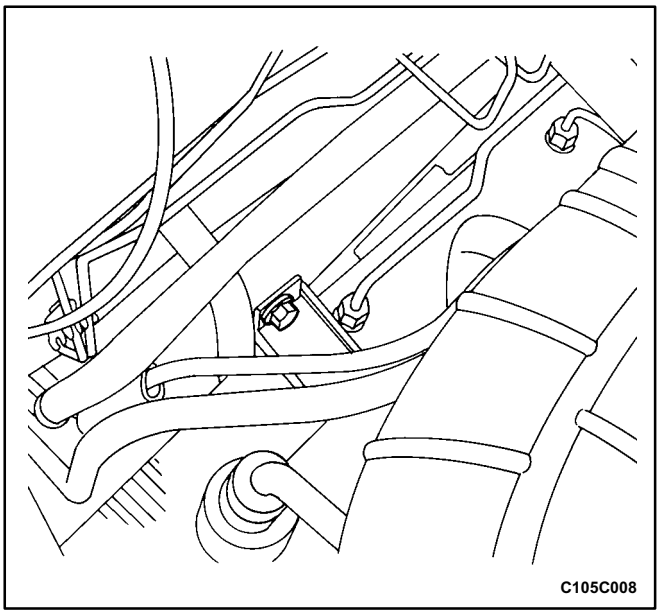

14. Remove the bolts from the steering gear mounting brackets.
15. Disconnect the rack and pinion assembly from the mounts and move it to the right. Bring the assembly out of the vehicle from below.

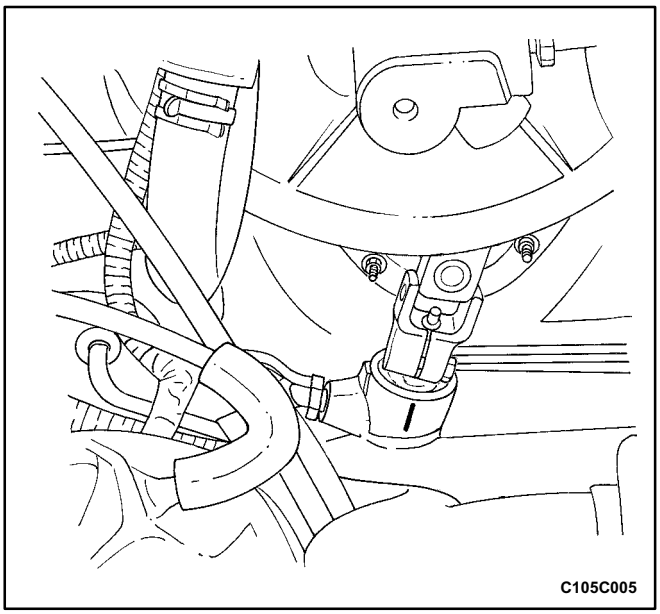

Installation Procedure

1. Install the rack and pinion assembly from below. The steering gear must be in a straight ahead position, and the steering wheel spokes must be vertical and pointing to the left. Align the marks on the shafts to ensure proper positioning. Seat the stub shaft into the intermediate shaft.

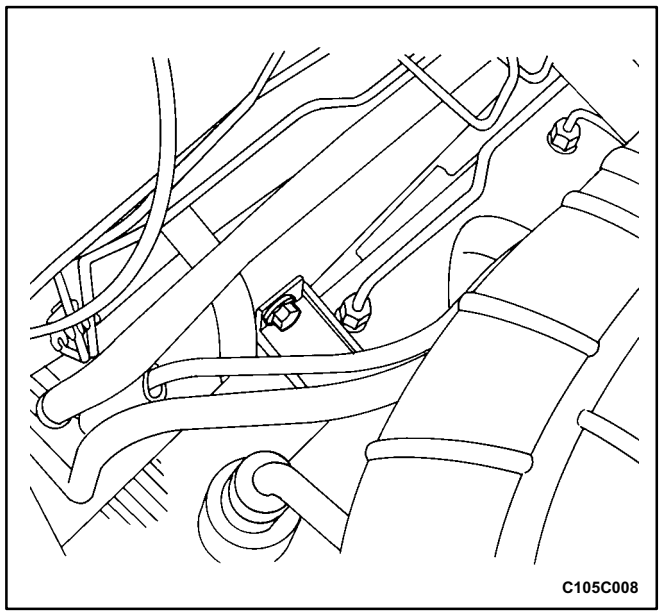

2. Install the bolts on the upper part of the steering gear mounting brackets.

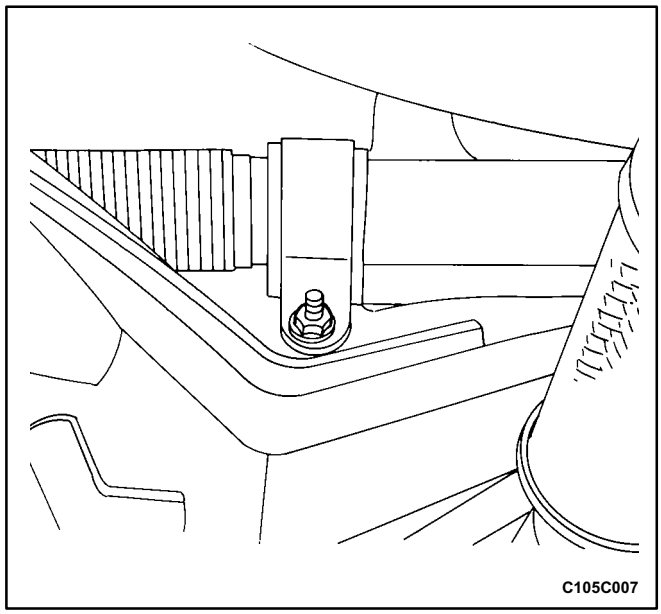

3. Install the nuts on the lower part of the steering gear mounting bracket.

Tighten

Tighten the steering gear mounting bracket bolts and nuts to 60 N•m (44 lb•ft).

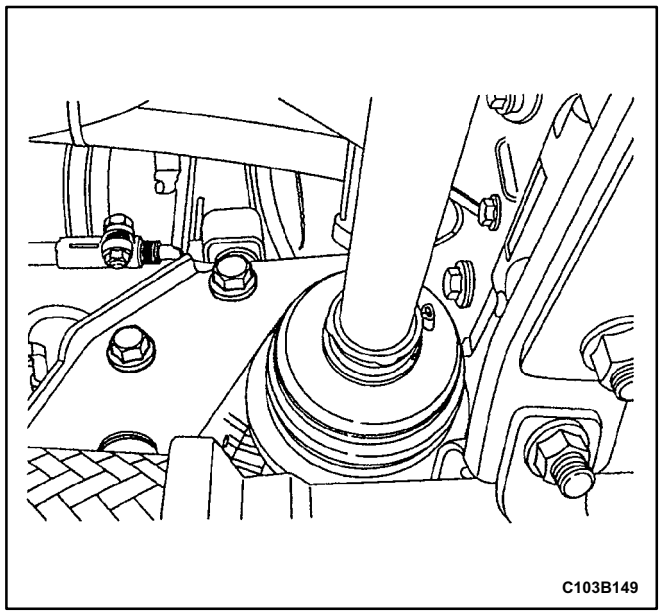

4. On vehicles equipped with a manual transaxle, position the transaxle center bracket in place and install the bolts securing the bracket to the engine and the transaxle.

Tighten

Tighten the transaxle center bracket to transaxle bolts and the transaxle center bracket to engine bolt to 90 N•m (66 lb•ft).

5. On vehicles equipped with an automatic transaxle, install the transaxle center bracket. Refer to *Section 5A, ZF 4 HP 14 Automatic Transaxle*.
6. Install the center member. Refer to *Section 9N, Frame and Underbody*.

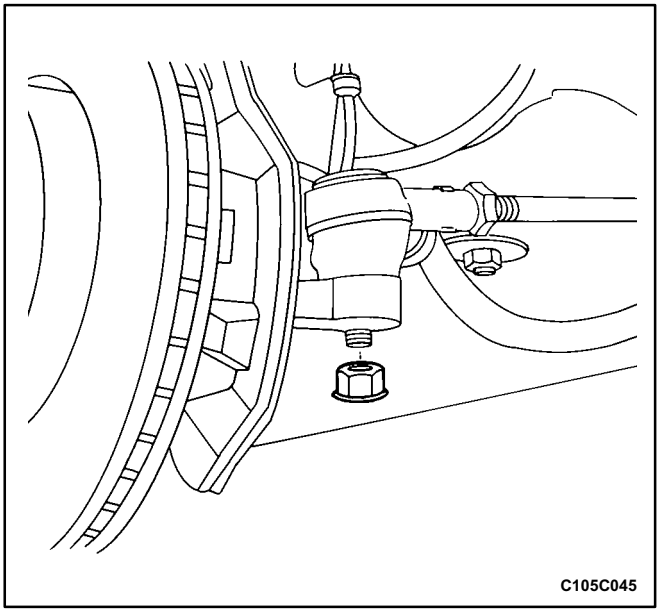

7. Connect the tie rod ends to the strut assembly.
8. Install the outer tie rod nuts.

Tighten

Tighten the outer tie rod nuts to 50 N•m (37 lb•ft).

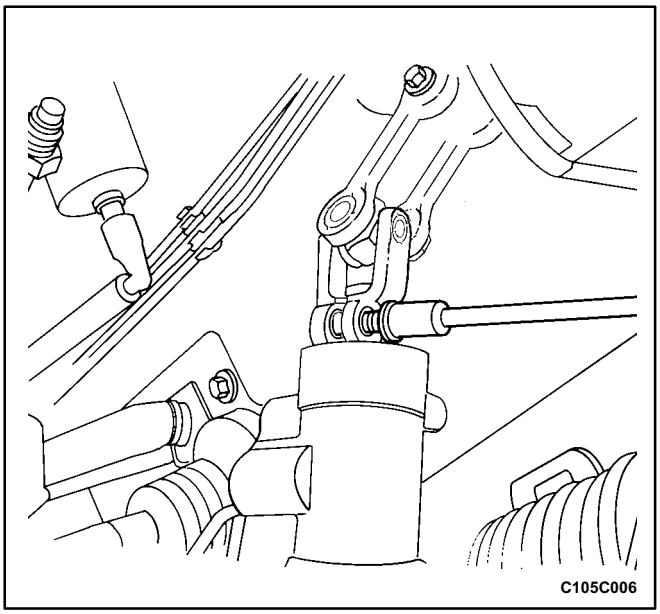

9. Install the lower intermediate shaft pinch bolt.

Tighten

Tighten the lower intermediate shaft pinch bolt to 25 N•m (18 lb•ft).

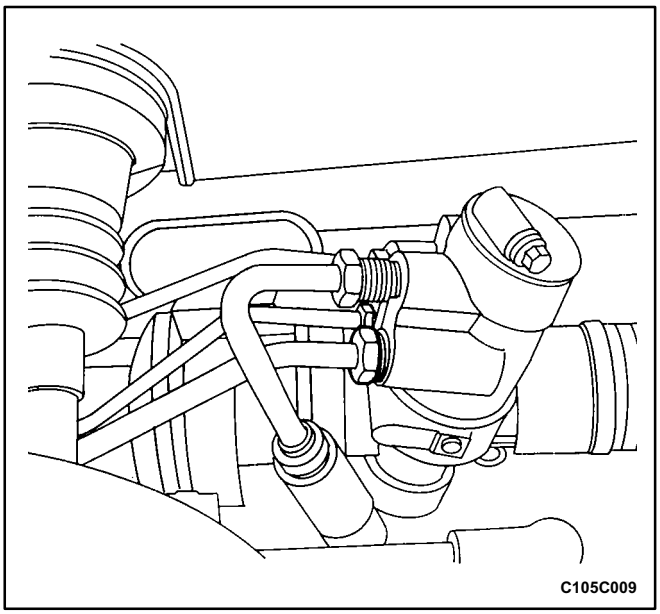

10. Connect the power steering gear fluid inlet pipe.

Tighten

Tighten the steering gear inlet pipe fitting to 28 N•m (21 lb•ft).

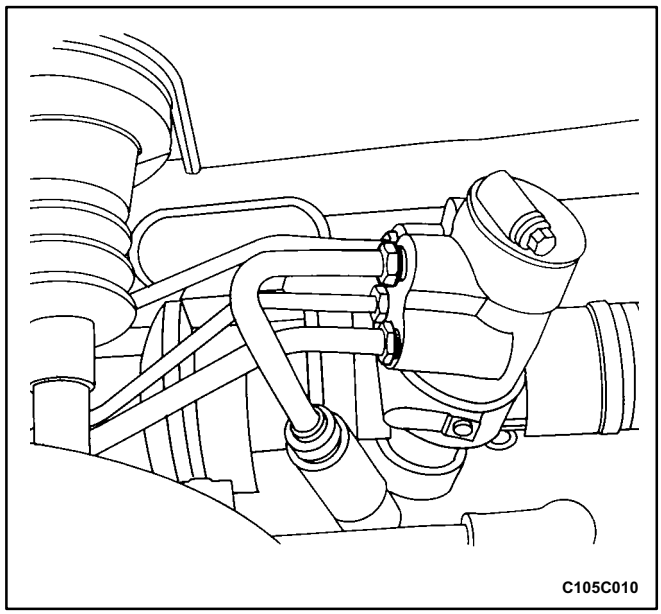

11. Connect the power steering gear fluid outlet pipe.

Tighten

Tighten the steering gear outlet pipe fitting to 28 N•m (21 lb•ft).

12. Install the wheels. Refer to *Section 2E, Tires and Wheels.*
13. Lower the vehicle.
14. Do a straight ahead check. Refer to „Straight Ahead Check" in this section.

Notice: When adding fluid or making a complete fluid change, always use power steering fluid DEXRON® II or III or equivalent. Failure to use the proper fluid will cause hose and seal damage and fluid leaks.

15. Refill the power steering system and check for leaks. If leaks are found, correct the cause of the leak and bleed the system. Refer to *Section 6A, Power Steering System*.
16. Connect the negative battery cable.

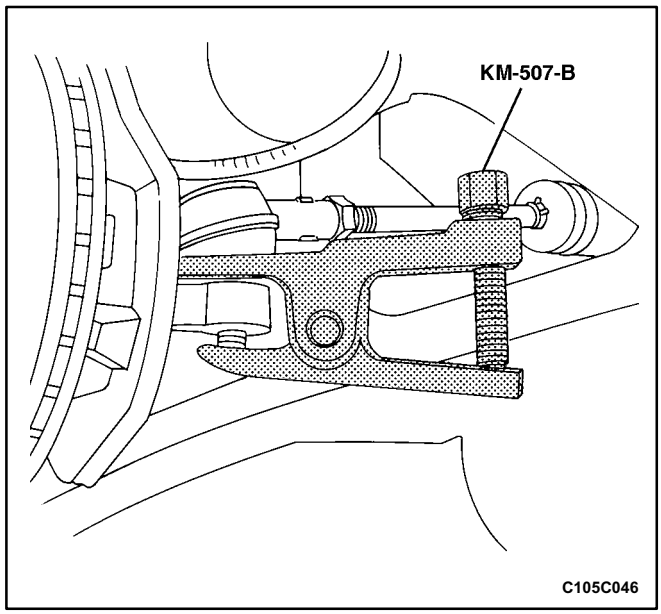

OUTER TIE ROD

Tools Required

KM-507-B Ball Joint Remover

Removal Procedure

1. Remove the wheel. Refer to *Section 2E, Tires and Wheels*.
2. Mark the threads on the inner tie rod to aid in repositioning the adjusting nut.
3. Remove the outer tie rod nut and disconnect the outer tie rod from the steering knuckle using the ball joint remover KM-507-B.

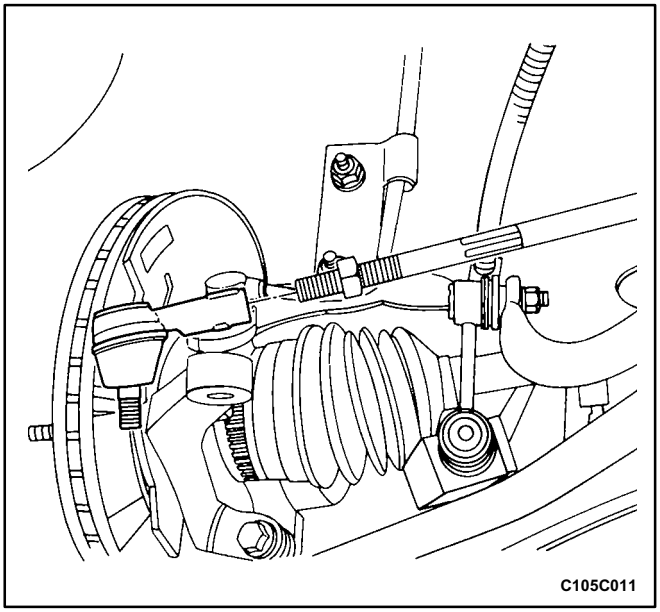

4. Loosen the outer tie rod adjusting nut and remove the outer tie rod by twisting it off the inner tie rod.

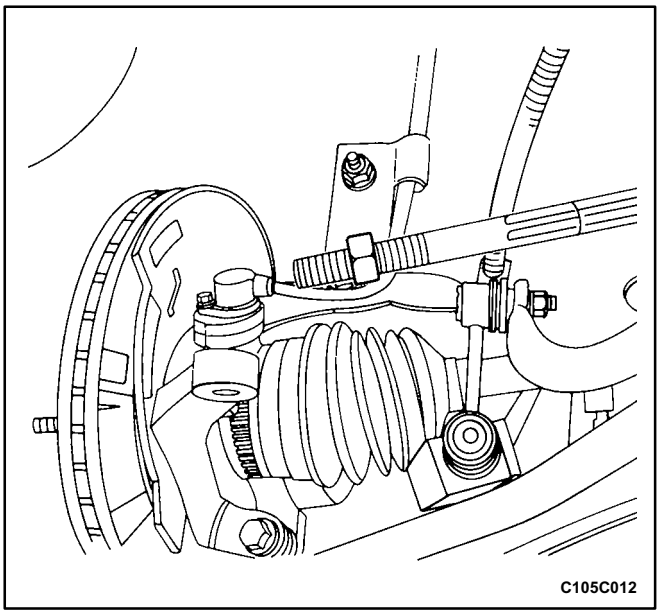

Installation Procedure

1. Reposition the adjusting nut to the marks on the inner tie rod.

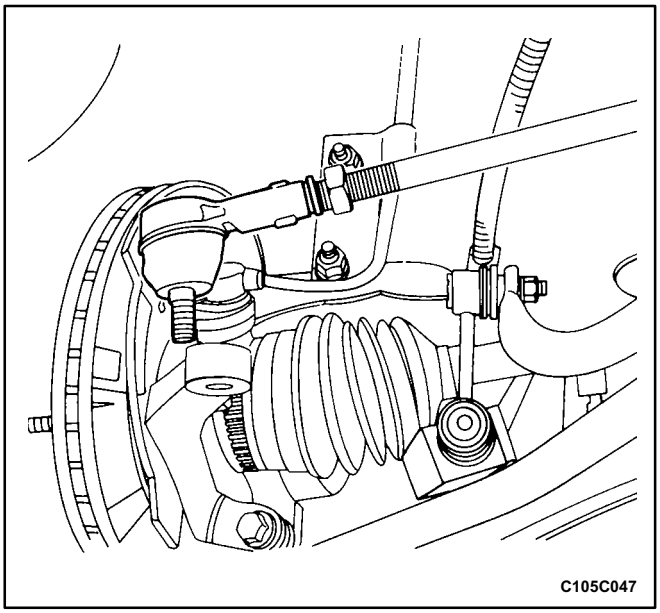

2. Install the outer tie rod by twisting it onto the inner tie rod.

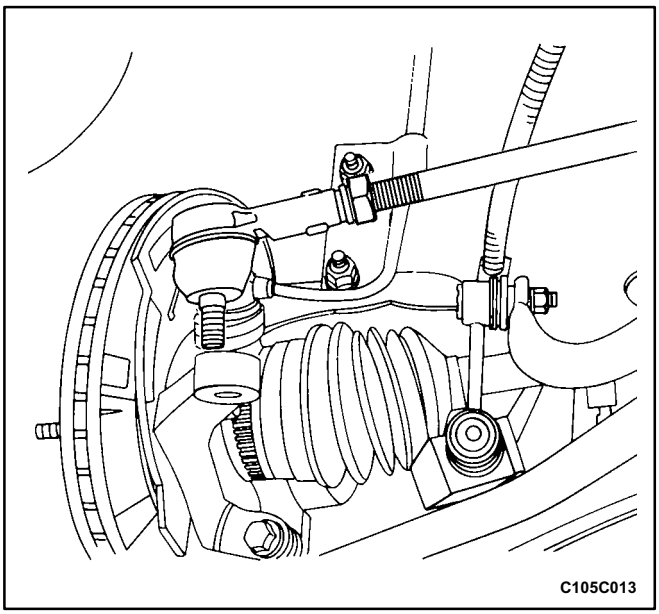

3. Connect the outer tie rod to the steering knuckle.
4. Perform a front toe adjustment. Refer to *Section 2B, Wheel Alignment.*
5. Tighten the adjusting nut.

Tighten

Tighten the outer tie rod adjusting nut to 64 N•m (47 lb•ft).

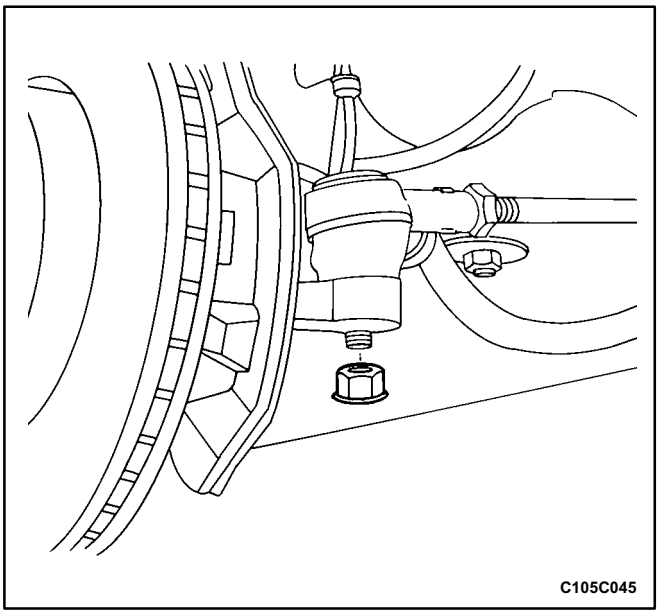

6. Install the outer tie rod nut.

Tighten

Tighten the outer tie rod nut to 50 N•m (37 lb•ft).

7. Install the wheel. Refer to *Section 2E, Tires and Wheels*.

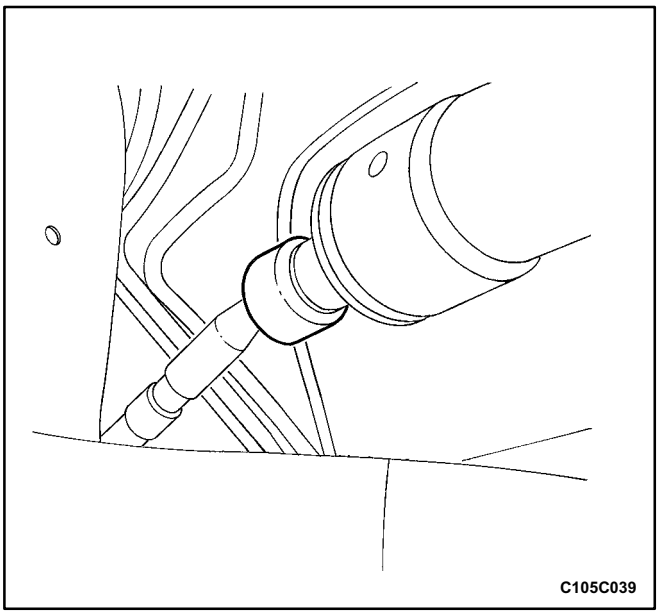

INNER TIE ROD

Removal Procedure

1. Raise and suitably support the vehicle.
2. Remove the wheel. Refer to *Section 2E, Tires and Wheels*.
3. Remove the outer tie rod. Refer to „Outer Tie Rod” in this section.
4. Remove the dust boot. Refer to „Dust Boot” in this section.
5. Push back the plastic retainer protecting the connection between the inner tie rod and the power steering gear rack.

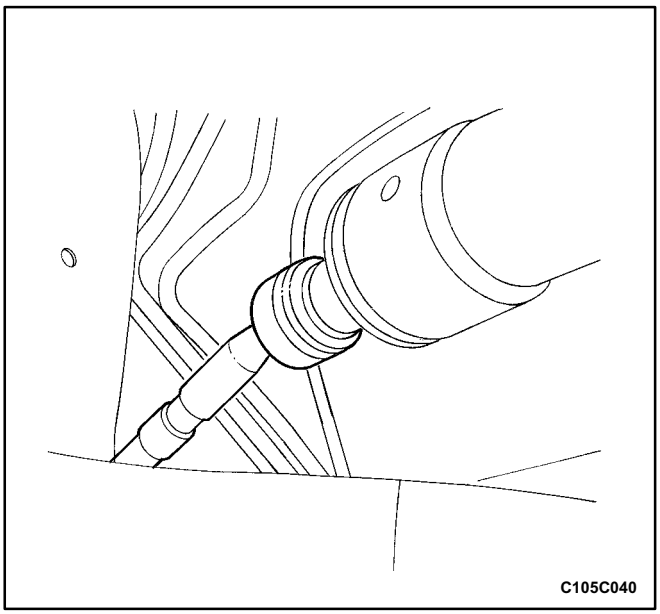

6. Remove the inner tie rod.

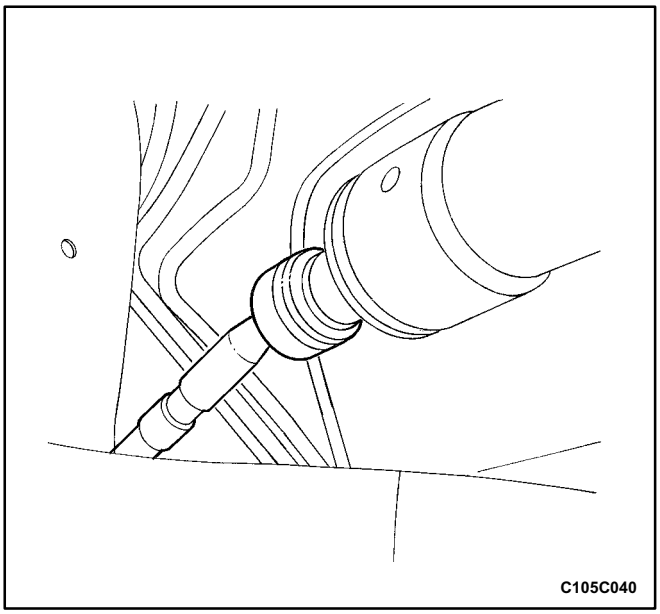

Installation Procedure

Important: The right and left inner tie rods are unequal in length. Be sure to install the correct inner tie rod on the proper side of the power steering gear.

1. Install the inner tie rod.

   Tighten

   Tighten the inner tie rod to 100 N•m (74 lb•ft).

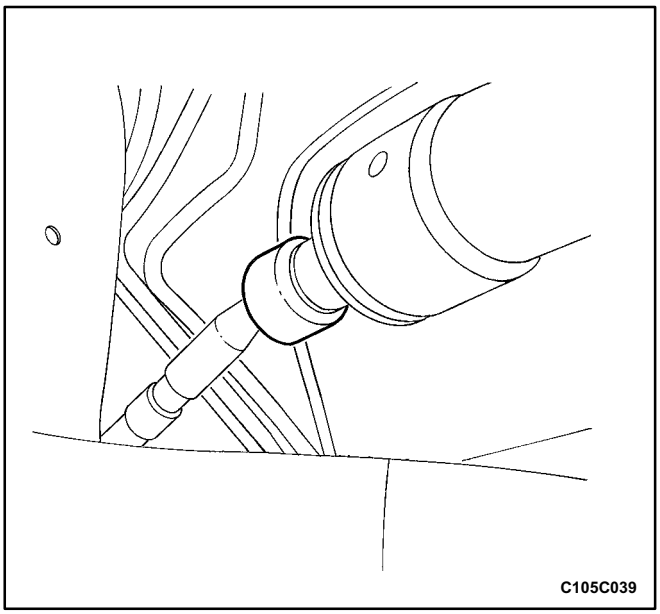

2. Push the plastic retainer over the tie rod.
3. Install the dust boot. Refer to „Dust Boot” in this section.
4. Install the outer tie rod. Refer to „Outer Tie Rod” in this section.
5. Install the wheel. Refer to *Section 2E, Tires and Wheels*.
6. Lower the vehicle.

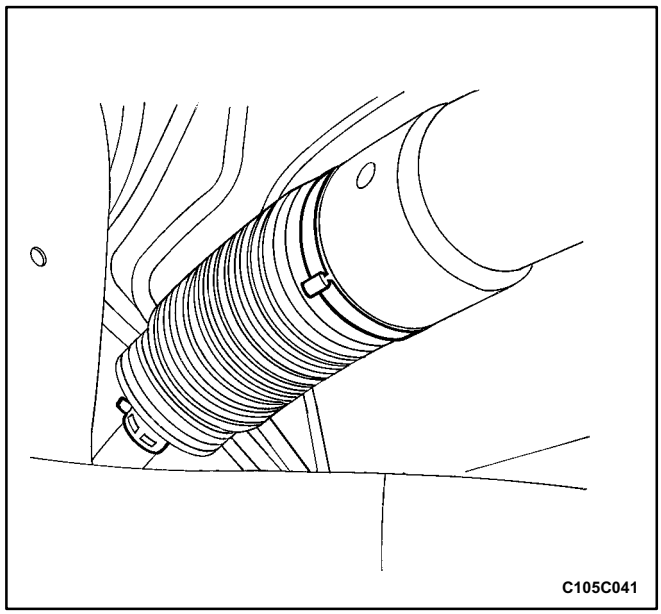

DUST BOOT

Tools Required

KM-J-22610 Installer

Removal Procedure

1. Raise and suitably support the vehicle
2. Remove the wheel. Refer to *Section 2E, Tires and Wheels*.
3. Remove the outer tie rod. Refer to „Outer Tie Rod" in this section.
4. Remove the dust boot retaining clamps.

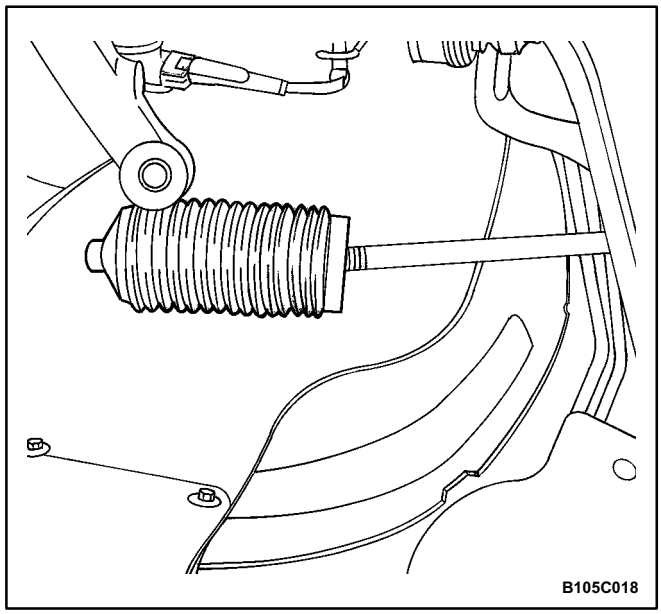

5. Remove the dust boot.

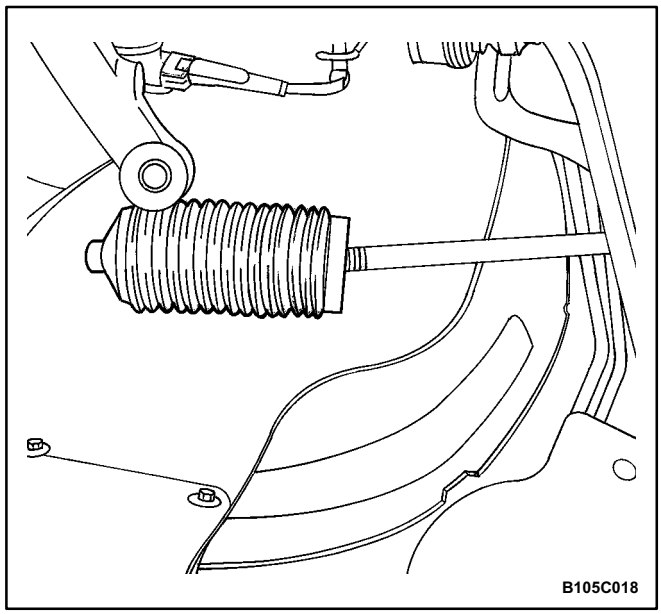

Installation Procedure

1. Install the dust boot.

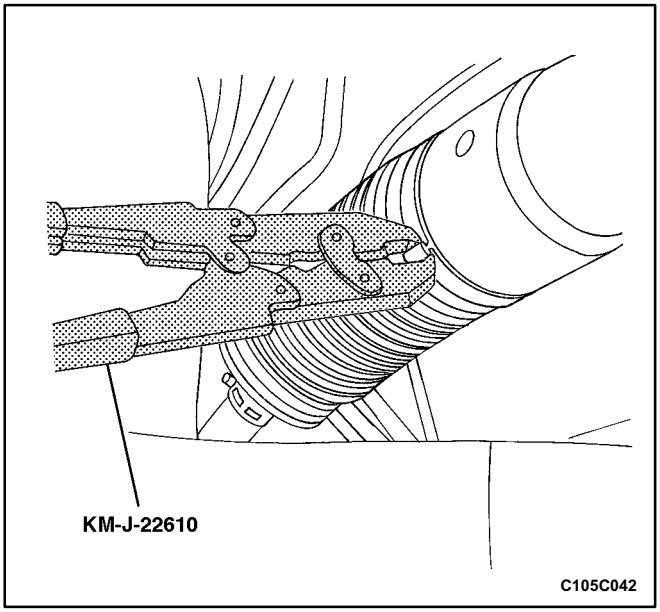

2. Install the tie rod end dust boot retaining clamp. Install the cylinder end dust boot retaining clamp with the installer KM-J-22610.
3. Install the outer tie rod. Refer to „Outer Tie Rod” in this section.
4. Install the wheel. Refer to *Section 2E, Tires and Wheels*.
5. Lower the vehicle.

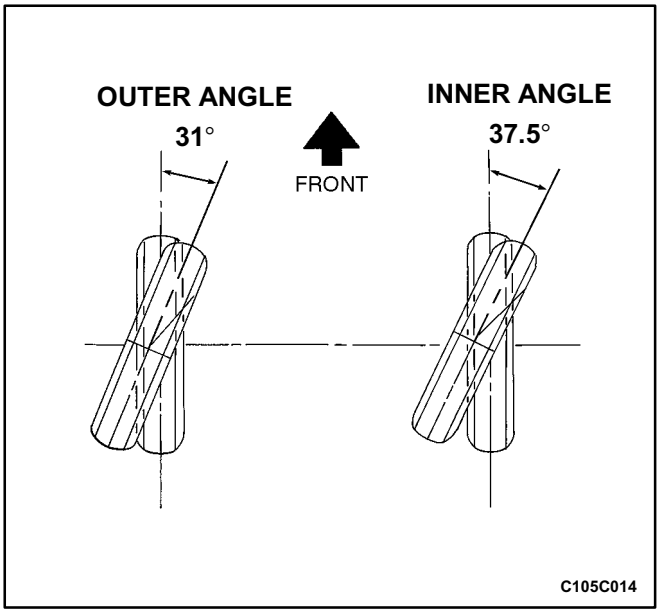

STRAIGHT AHEAD CHECK

After all the necessary operations on the steering gear are completed (removing and installing, disassembling and assembling), check the exact straight ahead position of the steering in each case.

With the vehicle on the floor, place the steering wheel in the straightāhead position. Mark the centerline of both tires on the floor. Turn the steering wheel all the way to the right and mark the new centerline of both tires on the floor.

Straight Ahead Check Table

Step	Action	Value(s)	Yes	No
1	Place the steering wheel in the straight ahead position. Is the wheel in the correct position?	-	Go to *Step 2*	-
2	Is the lower intermediate shaft pinch bolt lying parallel to the steering gear?	-	Go to *Step 3*	Go to *Step 4*
3	Is the steering wheel off center by more than 5 degrees?	-	Go to *Step 5*	Go to *Step 6*
4	The pinion is displaced on the rack. The steering pinion position must be corrected. Is the repair complete?	-	Go to *Step 2*	-
5	Remove steering wheel and center on the spindle splines. Is the repair complete?	-	Go to *Step 3*	-
6	Turn the steering wheel all the way to the right. Measure the inner and the outer angles of the tire centerline compared to the straight ahead centerline. Are the angles within specifications?	Inner angle: 37.5° Outer angle: 31°	System OK	Go to *Step 7*
7	The rack assembly was not assembled correctly. Repair as needed. Is the repair complete?	-	Go to *Step 6*	-

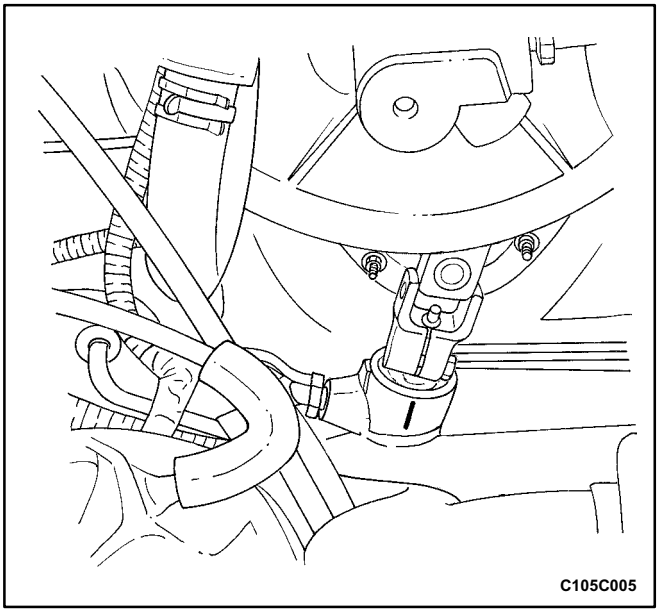

INTERMEDIATE SHAFT AND DASH SEAL

(Left-Hand Drive Shown, Right-Hand Drive Similar)

Removal Procedure

1. Turn the steering wheel until it is horizontal, with the spokes pointing down. This is the straight ahead position. Make a mark on the stub shaft housing that lines up with a mark on the intermediate shaft lower universal joint. This mark will be used for proper alignment during installation.

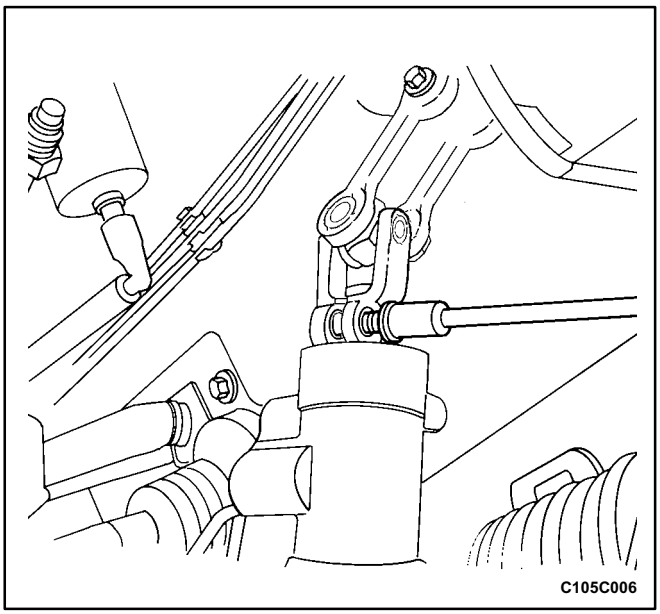

2. Remove the lower pinch bolt from the universal joint on the intermediate shaft.

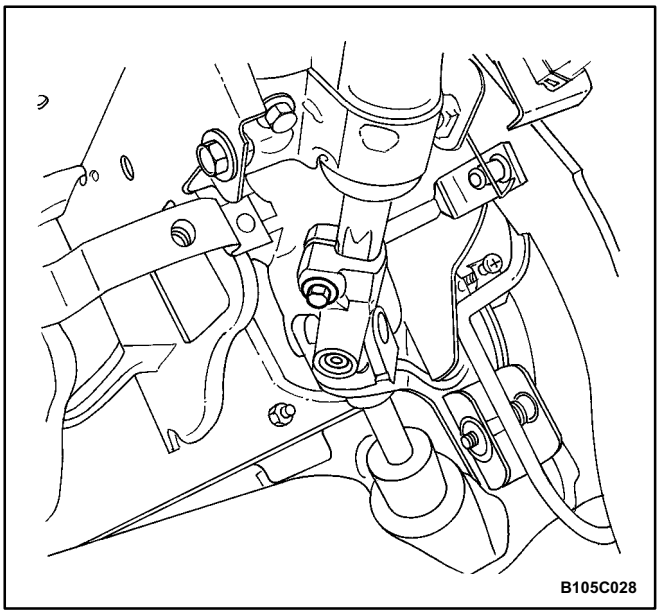

3. Turn the steering wheel so that the upper pinch bolt is accessible. Remove the upper pinch bolt from the universal joint on the intermediate shaft.

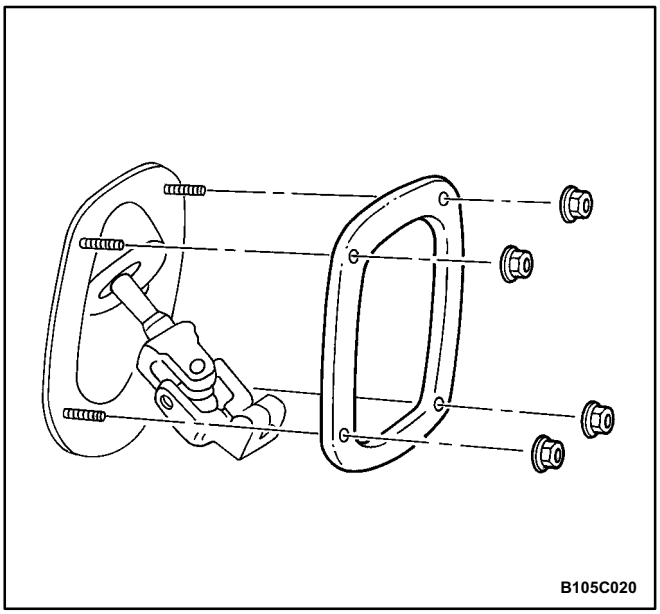

4. Remove the nuts from the dash seal retaining ring and remove the dash seal retaining ring.

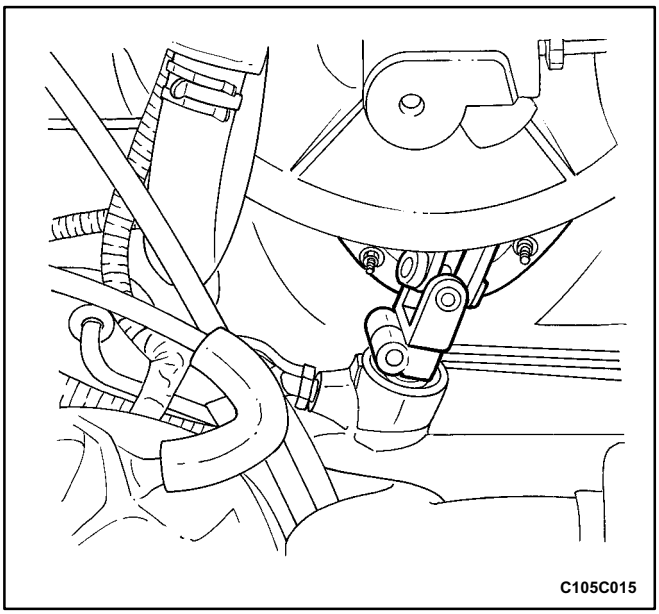

5. Remove the coupling from the power steering gear and pull the intermediate shaft out of the engine compartment.

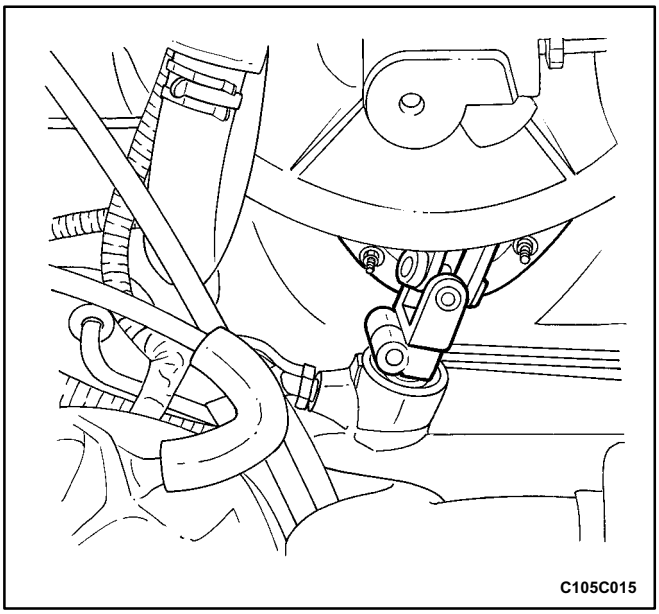

Installation Procedure

1. Install the intermediate shaft into the vehicle.

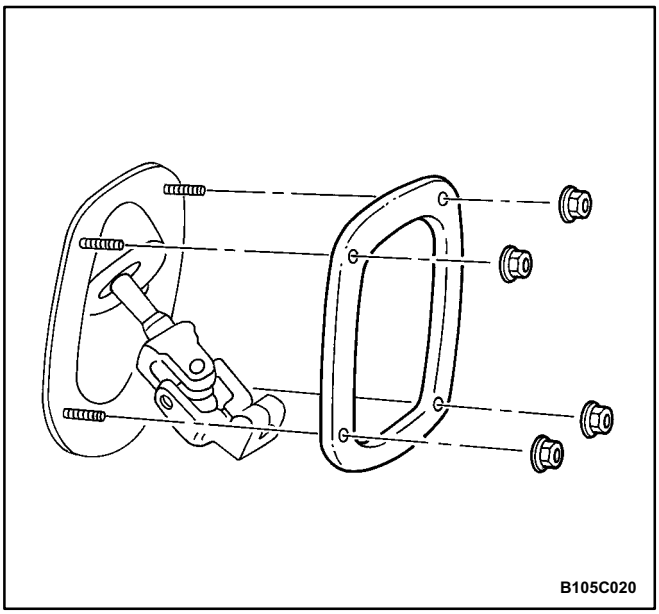

2. Install the dash seal retaining ring with the nuts.

Tighten

Tighten the dash seal retaining ring nuts to 7 N•m (62 lb•in).

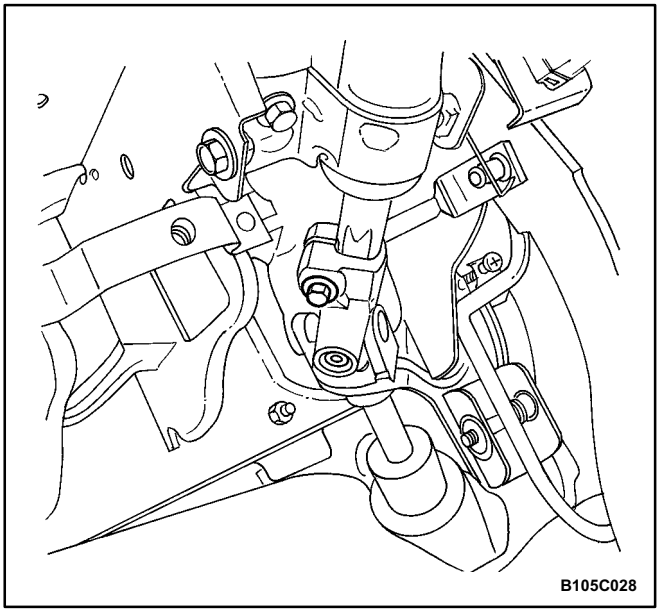

Important: When attaching the upper universal joint, the steering wheel must be placed in the straight ahead position with the spokes pointing down.

3. Attach the upper universal joint of the intermediate shaft onto the steering column.
4. Install the pinch bolt into the upper universal joint on the intermediate shaft and tighten the bolt.

Tighten

Tighten the upper intermediate shaft pinch bolt to 22 N•m (16 lb•ft).

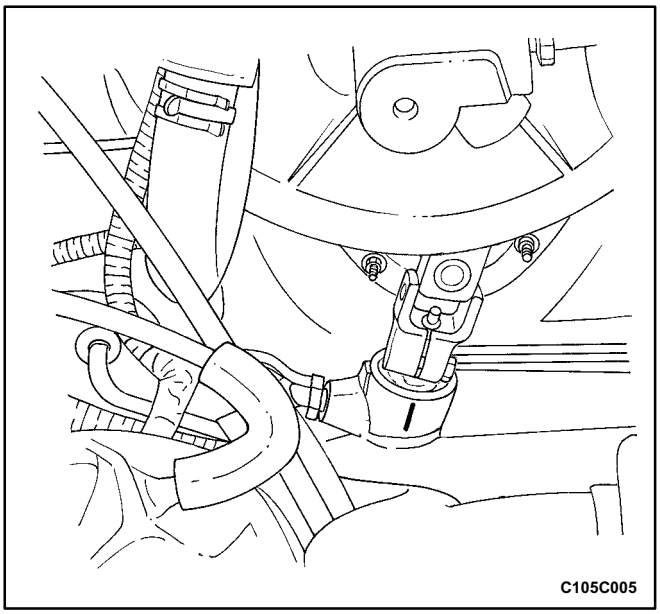

Important: When attaching the lower universal joint, the marks on the intermediate shaft and on the stub shaft should line up.

5. Attach the lower universal joint of the intermediate shaft onto the steering gear stub shaft.

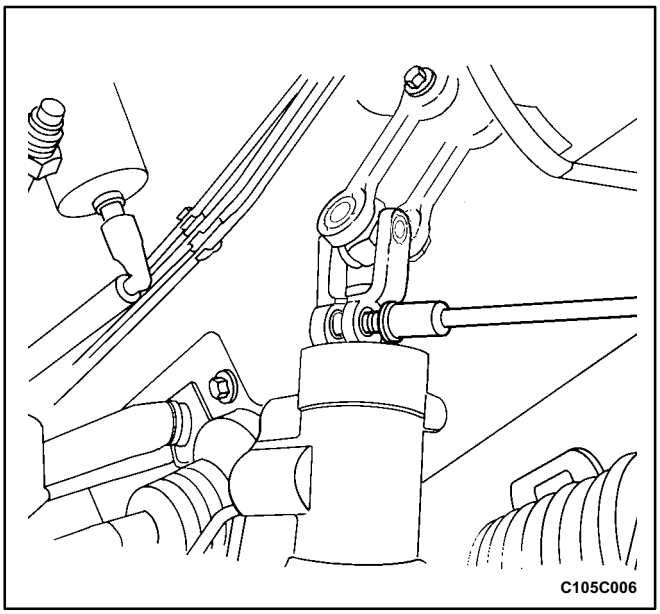

Important: When installing the lower intermediate shaft pinch bolt, make sure the bolt goes through the universal joint on the side of the stub shaft with the notch. If you have trouble seating the universal joint completely down onto the stub shaft, rotate the steering wheel slightly while pushing down on the universal joint.

6. Install the bolt into the lower universal joint on the intermediate shaft and tighten the bolt.

Tighten

Tighten the lower intermediate shaft pinch bolt to 22 N•m (16 lb•ft).

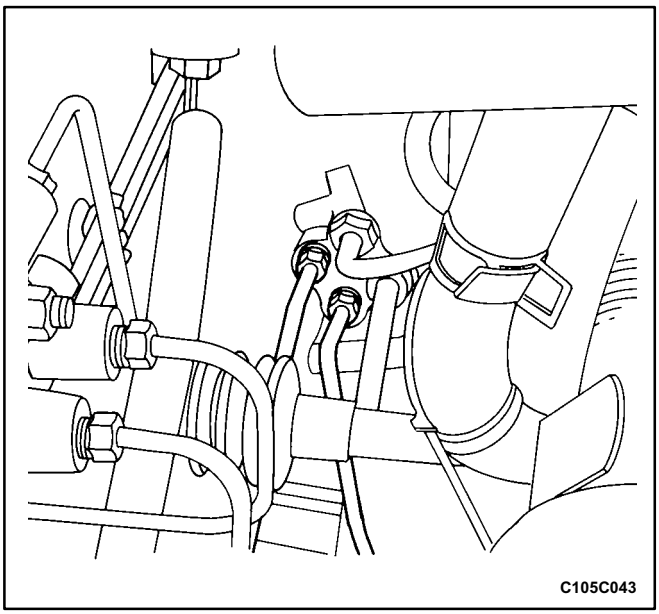

HYDRAULIC CYLINDER LINES

(Left-Hand Drive-Shown, Right-Hand Drive Similar)

Removal Procedure

1. Siphon the power steering fluid from the fluid reservoir.
2. Raise and suitably support the vehicle.
3. Disconnect the power steering gear hydraulic cylinder pipes from the power steering gear at the valve end. Replace the O-ring seals as needed.

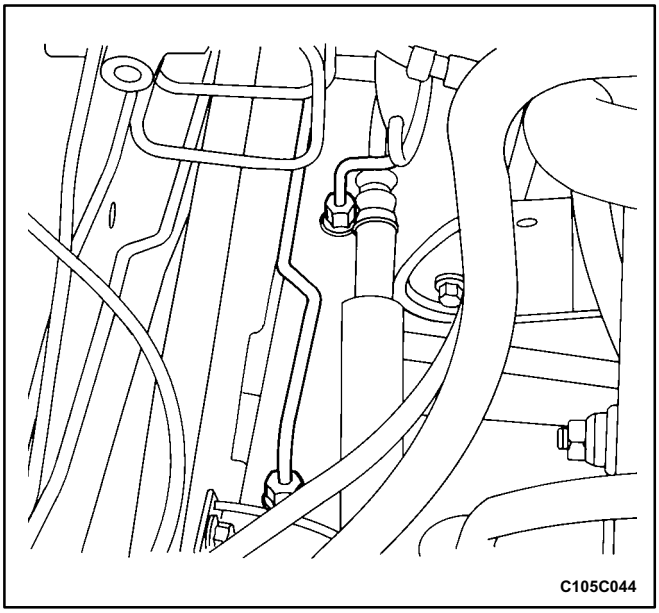

4. Disconnect the power steering gear hydraulic cylinder pipes from the power steering gear at the cylinder end.
5. Remove the steering gear hydraulic cylinder pipes from the vehicle.

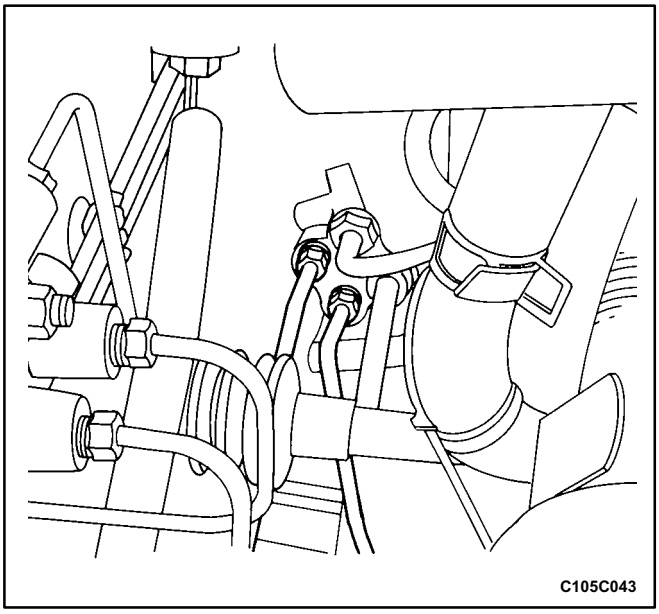

Installation Procedure

1. Lubricate any new O-ring seals with power steering fluid.
2. Place the O-ring seals into the housing and install the steering gear hydraulic cylinder pipes.
3. Connect the power steering gear hydraulic cylinder pipes to the power steering gear at the valve end.

   Tighten

   Tighten the hydraulic cylinder line fittings at the valve end to 18 N•m (13 lb•ft).

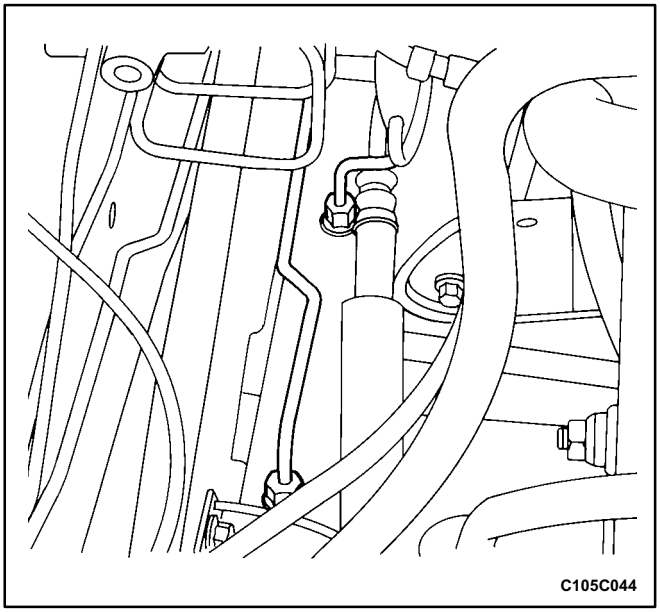

4. Connect the power steering gear hydraulic cylinder pipes to the power steering gear at the cylinder end.

   Tighten

   Tighten the hydraulic cylinder line fittings at the cylinder end to 27 N•m (20 lb•ft).

5. Lower the vehicle.

Notice: When adding fluid or making a complete change, always use DEXRON® II or III power steering fluid. Failure to use the proper fluid will cause hose and seal damage and fluid leaks.

6. Fill the fluid reservoir with power steering fluid.
7. Inspect for leaks. If there are leaks, correct the cause of the leaks and bleed the system. Refer to „Bleeding the Power Steering System" in this section.

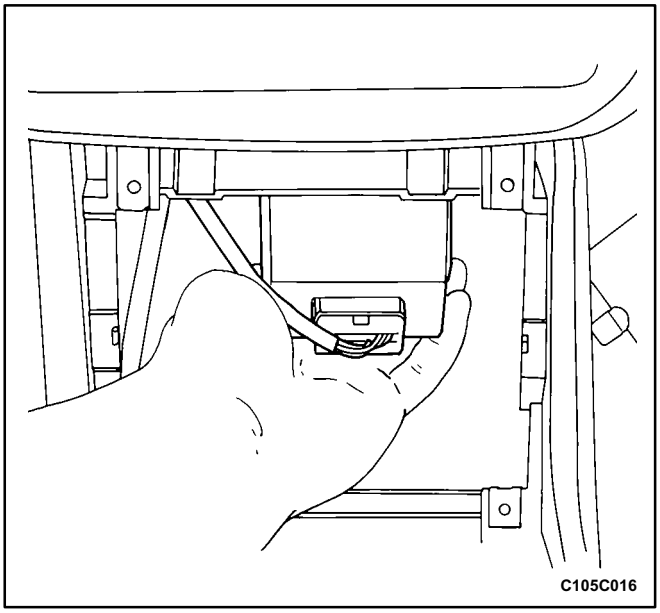

SPEED SENSITIVE POWER STEERING CONTROL MODULE

Removal Procedure

1. Disconnect negative battery cable.
2. Remove the ashtray. Refer to *Section 9E, Instrumentation/Driver Information*.
3. Slide the speed sensitive power steering (SSPS) control module off the control module bracket.

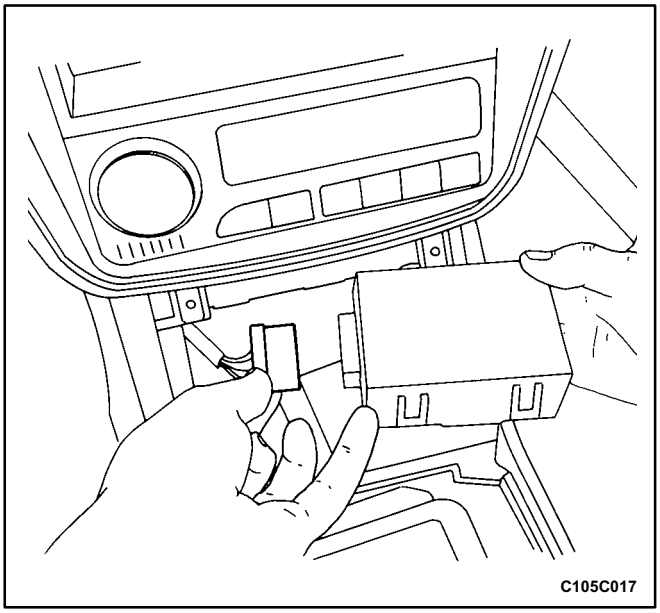

4. Disconnect the electrical connector from the SSPS control module.

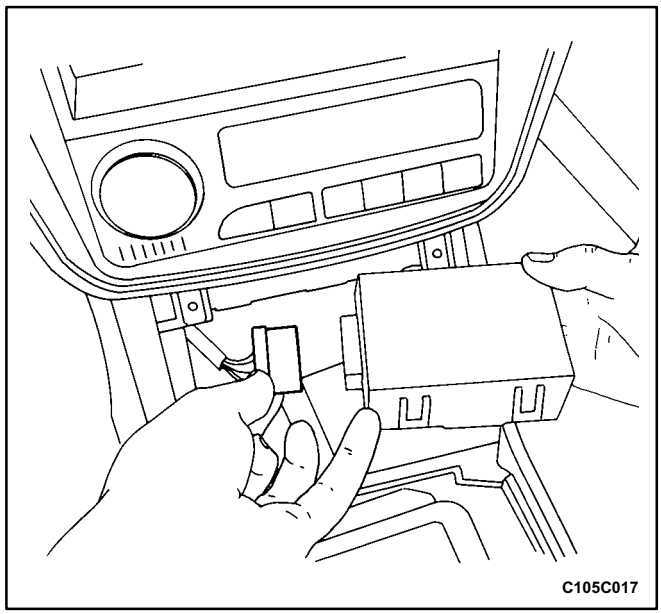

Installation Procedure

1. Connect the electrical connector to the SSPS control module.

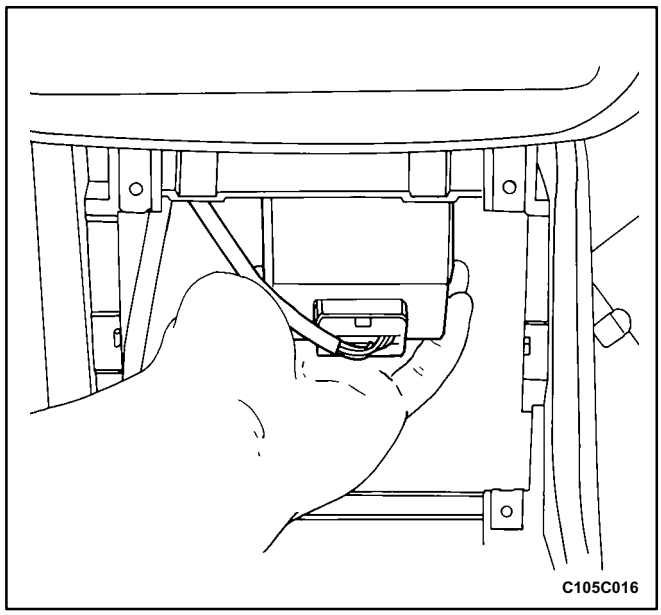

2. Slide the SSPS control module onto the SSPS control module bracket.
3. Install the ashtray. Refer to *Section 9G, Interior Trim*.
4. Connect the negative battery cable.

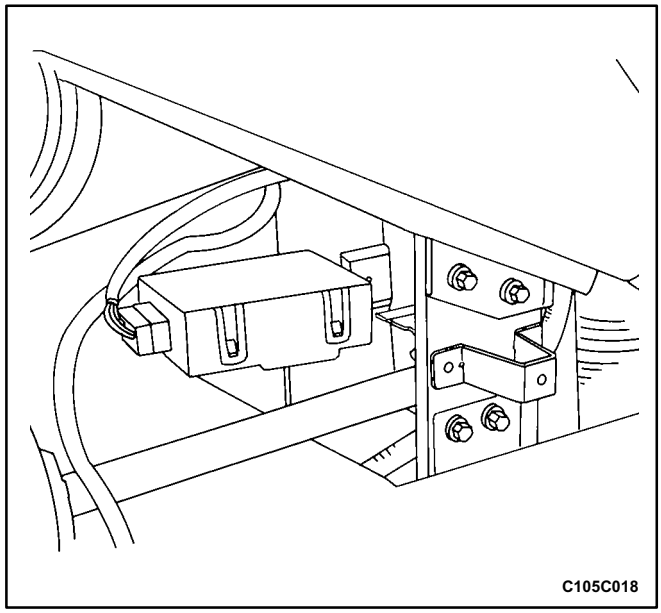

SPEED SENSITIVE POWER STEERING CONTROL MODULE BRACKET

Removal Procedure

1. Disconnect negative battery cable.
2. Remove the floor console. Refer to *Section 9G, Interior Trim*.
3. Slide the speed sensitive power steering (SSPS) control module off the control module bracket.

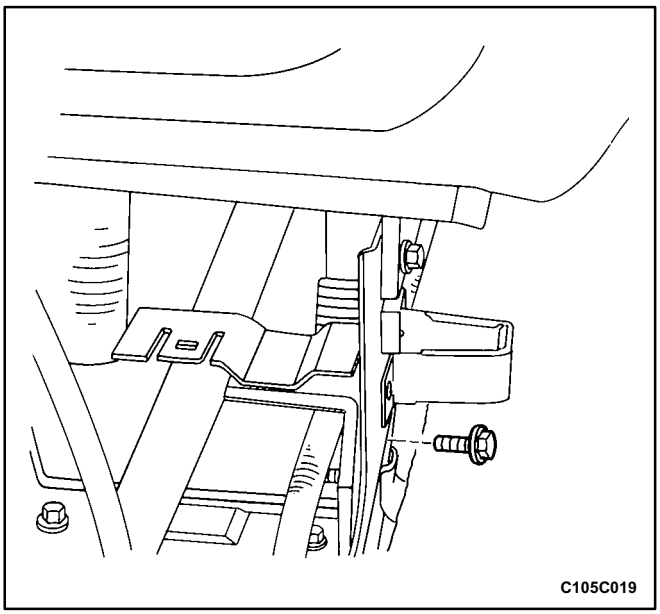

4. Remove the SSPS control module bracket bolts and remove the control module bracket.

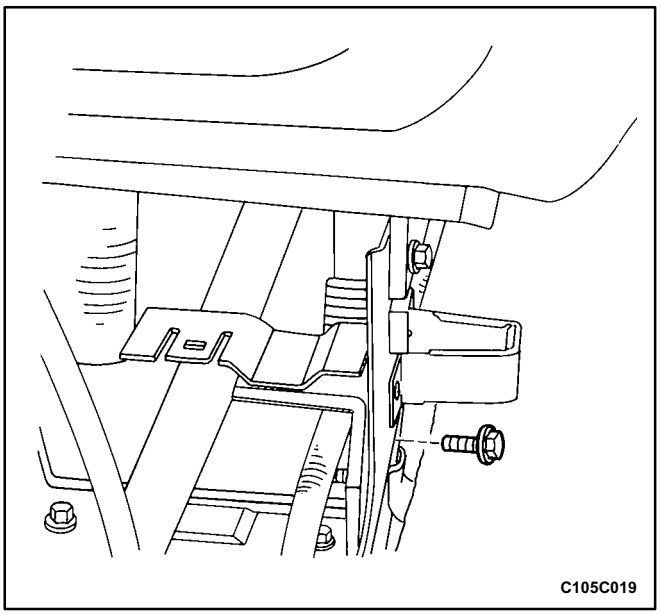

Installation Procedure

1. Install the SSPS control module bracket and the control module bracket bolts.

   Tighten

   Tighten the SSPS control module bracket bolts to 7 N.m (62 lb•in).

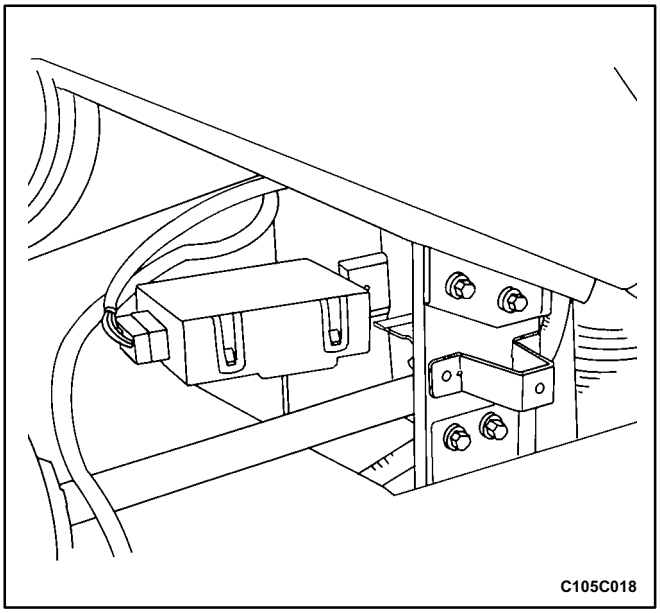

2. Slide the SSPS control module onto the control module bracket.
3. Install the floor console. Refer to *Section 9G, Interior Trim*.
4. Connect the negative battery cable.

UNIT REPAIR

RACK AND PINION

Tools Required

KM-J-22610 Installer

Disassembly Procedure

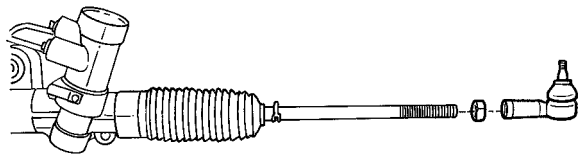

C105C025

1. Remove the rack and pinion steering assembly from the vehicle. Refer to „Rack and Pinion Assembly" in this section.
2. Remove the valve and pinion assembly from the rack and pinion steering assembly. Refer to „Valve and Pinion" in this section.
3. Remove the rack bearing assembly from the rack and pinion steering assembly. Refer to „Rack Bearing" in this section.
4. Mark the threads on the inner tie rod to aid in repositioning the adjusting nut.
5. Loosen the adjusting nut and remove the outer tie rod nut and the adjusting nut.

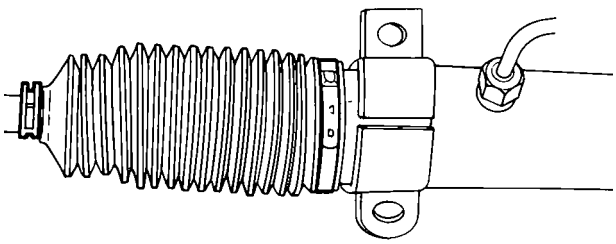

C105C020

6. Remove the dust boot retaining clamps.

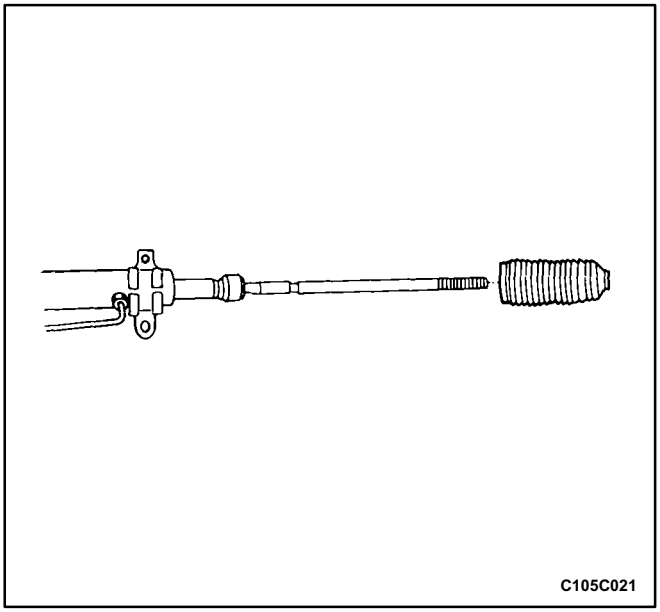

7. Remove the dust boot.

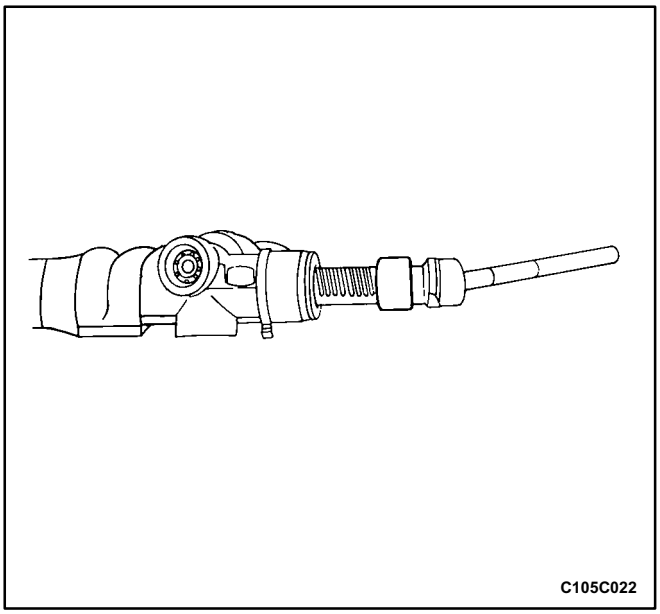

8. Push back the plastic retainer protecting the connection between the inner tie rod and the power steering gear rack.

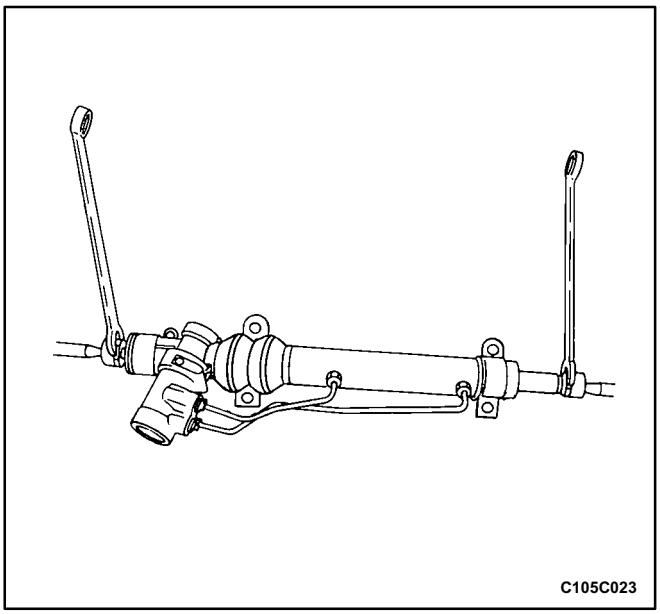

9. Counterhold the pinion side inner tie rod and remove the cylinder side inner tie rod.

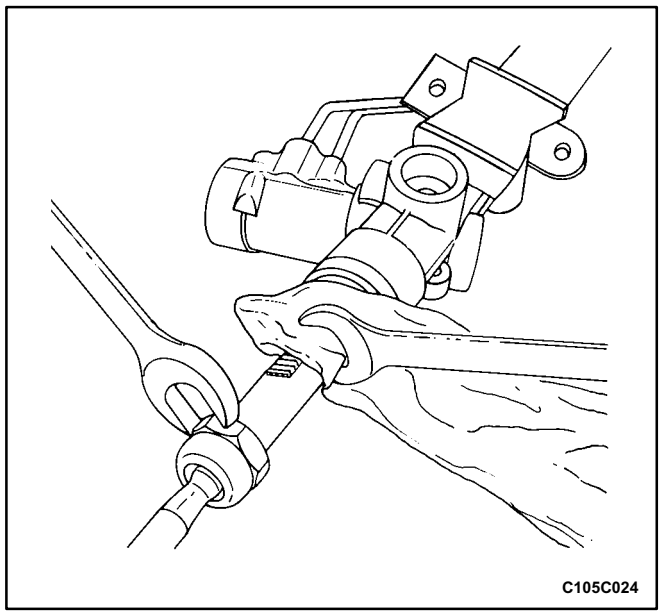

10. Place a rag over the rack, counterhold the rack assembly on the teeth with a wrench, and remove the pinion side inner tie rod.

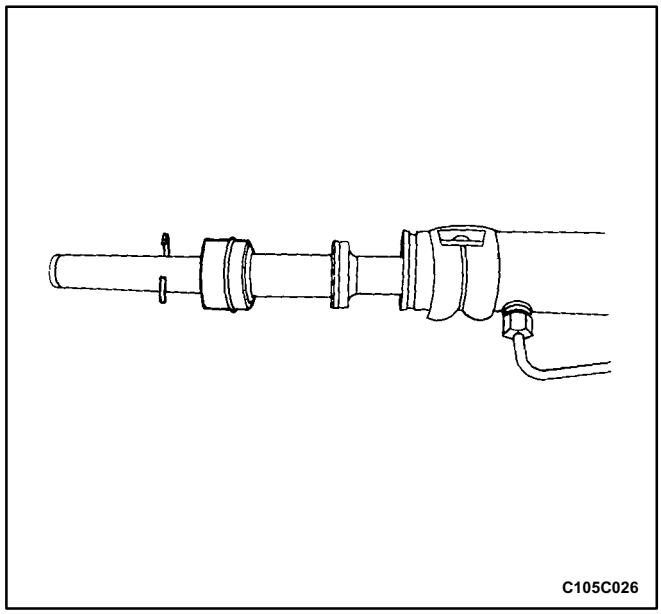

Important: The retaining ring can be released by inserting a small screwdriver through the hole in the side of the housing.

11. Remove the bulkhead inner cylinder retaining ring the bulkhead inner cylinder and the rack.

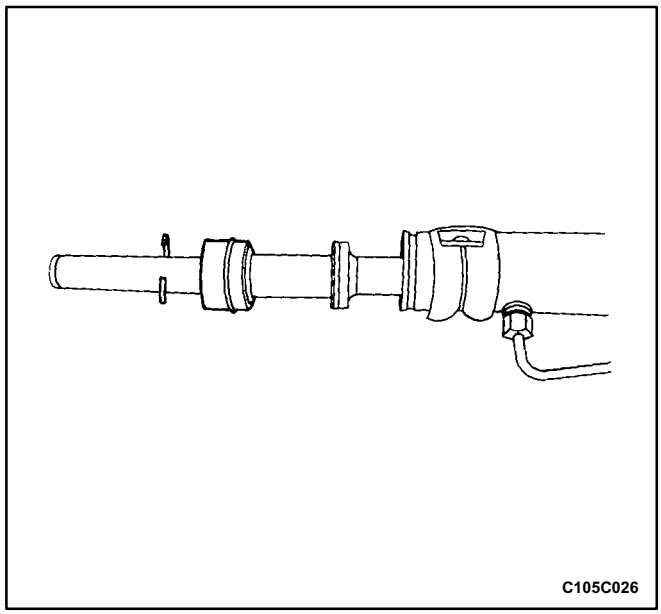

Assembly Procedure

Notice: Coat all the seals with power steering fluid to ensure proper sealing.

1. Install the rack, the bulkhead inner cylinder and the bulkhead inner cylinder retaining ring.

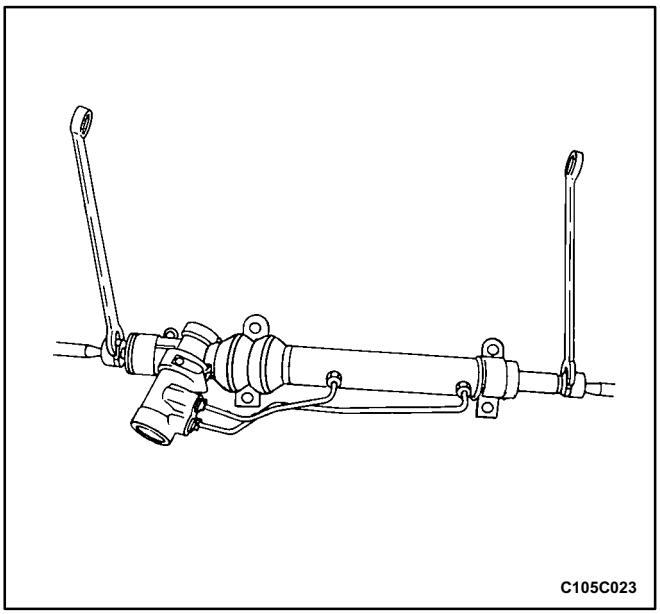

Notice: To prevent the inner tie rods from loosening, use Loctite® 242 (or equivalent) on both inner tie rod connections to secure them to the rack shaft.

Important: The right and left inner tie rods are unequal in length. Be sure to install the correct inner tie rod on the proper side of the power steering gear.

2. Firmly seat the inner tie rods against the rack and tighten both ends simultaneously.

Tighten

Tighten the inner tie rods to 100 N•m (74 lb•ft).

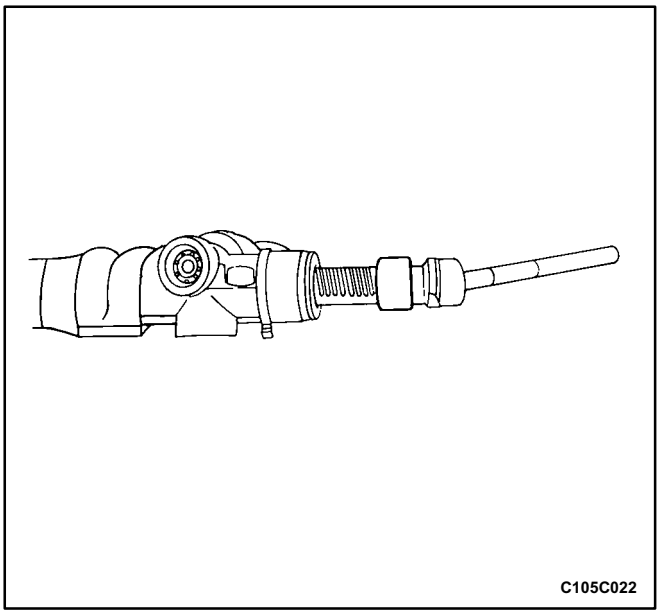

3. Push the plastic retainer back onto the connection between the inner tie rod and the power steering gear rack.

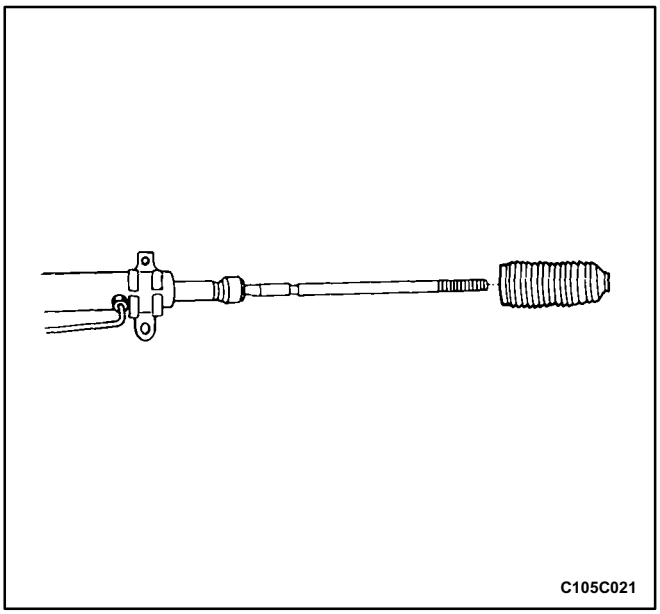

4. Install the dust boot.

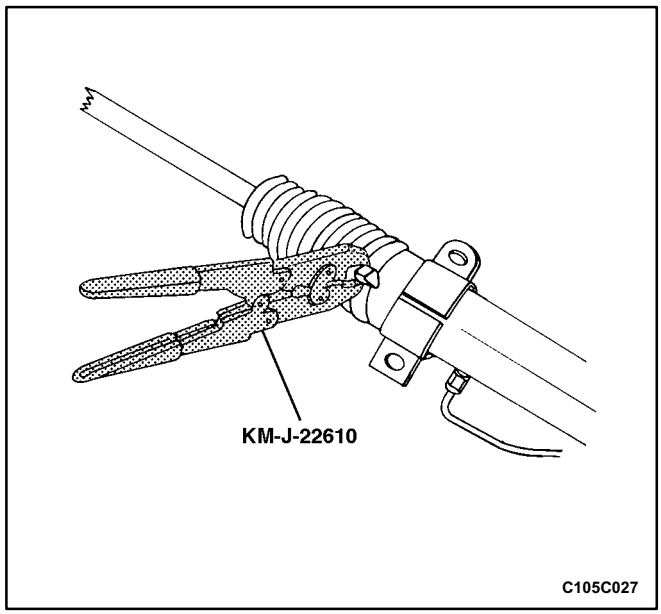

5. Install the cylinder end dust boot retaining clamps with the installer KM-J-22610.

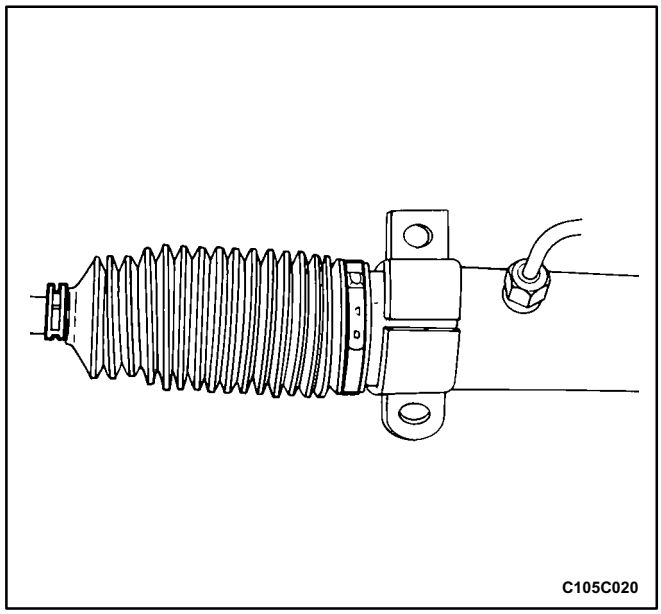

6. Install the tie rod end boot retaining clamps.

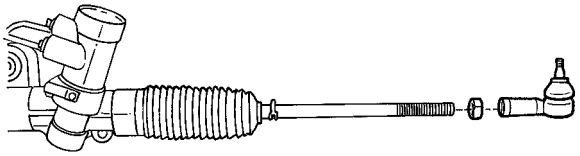

C105C025

7. Reposition the adjusting nut to the marks on the inner tie rod and install the outer tie rod by twisting it onto the inner tie rod.
8. Perform a front toe adjustment. Refer to *Section 2B, Wheel Alignment*.
9. Tighten the adjusting nut.

Tighten

Tighten the outer tie rod adjusting nut to 64 N•m (47 lb•ft).

10. Install the rack bearing assembly into the rack and pinion steering assembly. Refer to „Rack Bearing" in this section.
11. Install the valve and pinion assembly into the rack and pinion steering assembly. Refer to „Valve and Pinion" in this section.
12. Install the rack and pinion steering assembly into the vehicle. Refer to „Rack and Pinion Assembly" in this section.

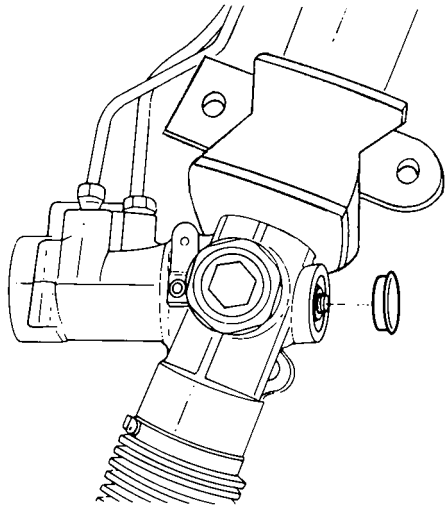

C105C028

STUB SHAFT SEALS AND UPPER AND LOWER BEARING

Disassembly Procedure

1. Remove the rack and pinion steering assembly from the vehicle. Refer to „Rack and Pinion Assembly" in this section.
2. Remove the dust cover from the lower end of the housing.

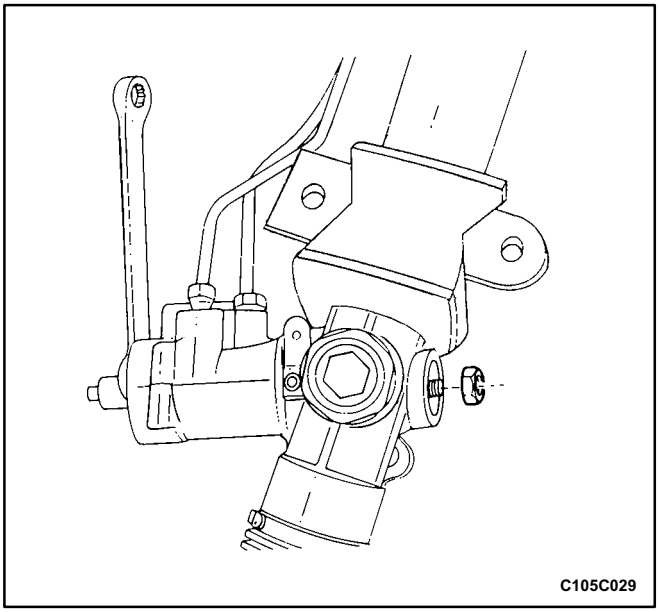

Notice: If the stub shaft is not held, damage to the pinion teeth will occur.

3. While holding the stub shaft with a wrench, remove the locknut from the pinion.

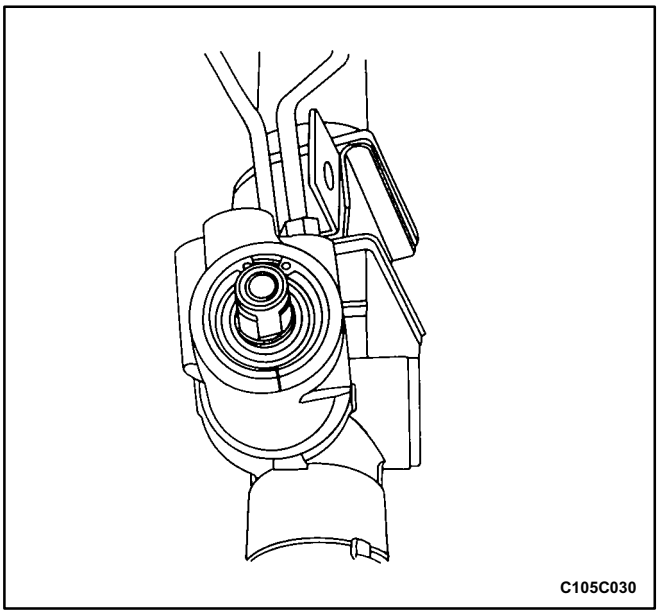

4. With the gear centered, mark the location of the stub shaft notch on the housing to aid in properly installing the valve and pinion assembly.

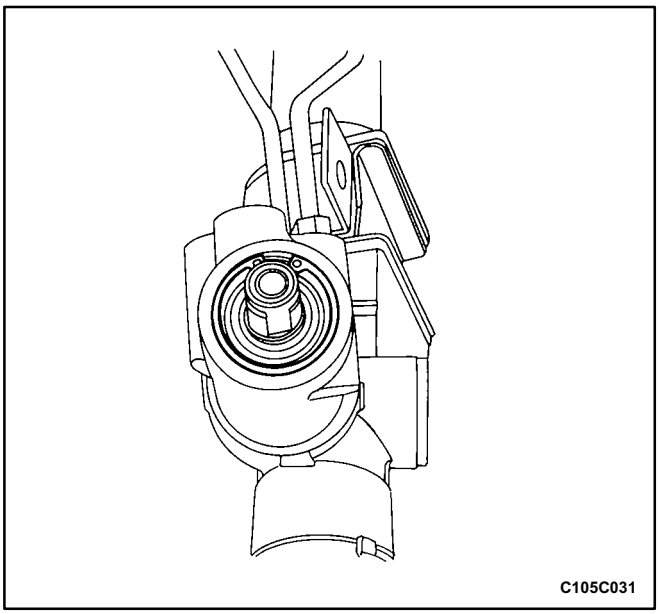

5. Remove the stub shaft retaining ring and, using an arbor press, press on the threaded end of the pinion until it is possible to remove the pinion and valve assembly from the housing.

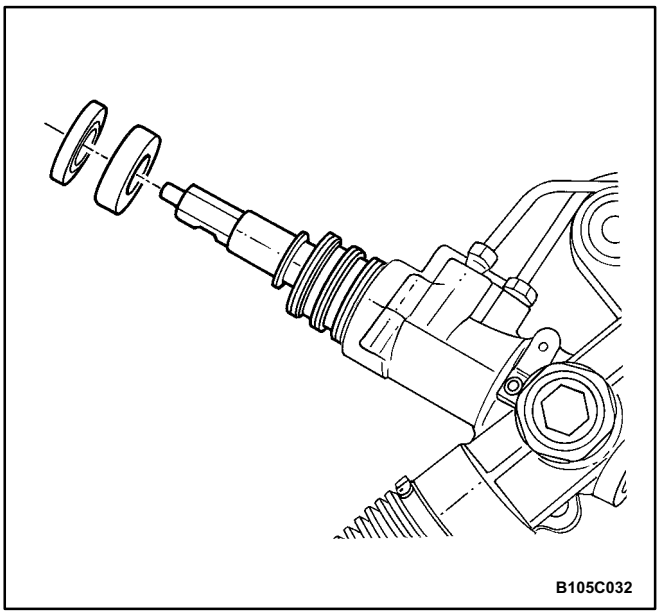

6. Remove the stub shaft dust seal the stub shaft bearing annulus assembly and the valve assembly from the housing. Discard the stub shaft dust seal.

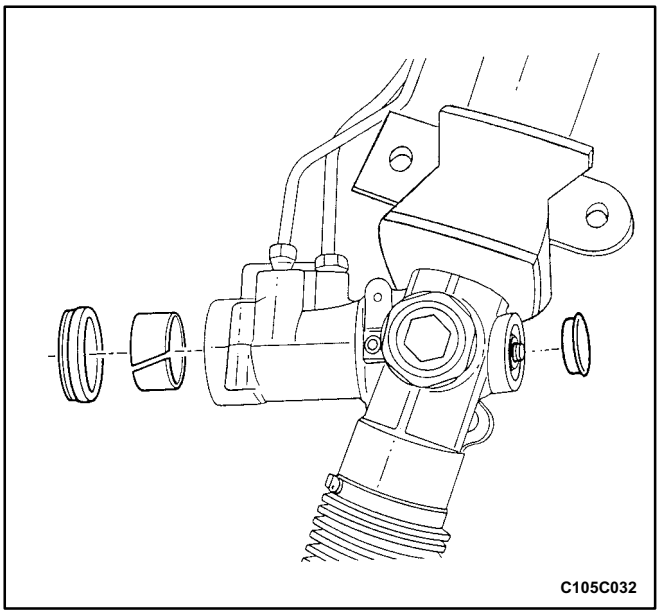

7. Remove the lower valve assembly bearing and the bushing.

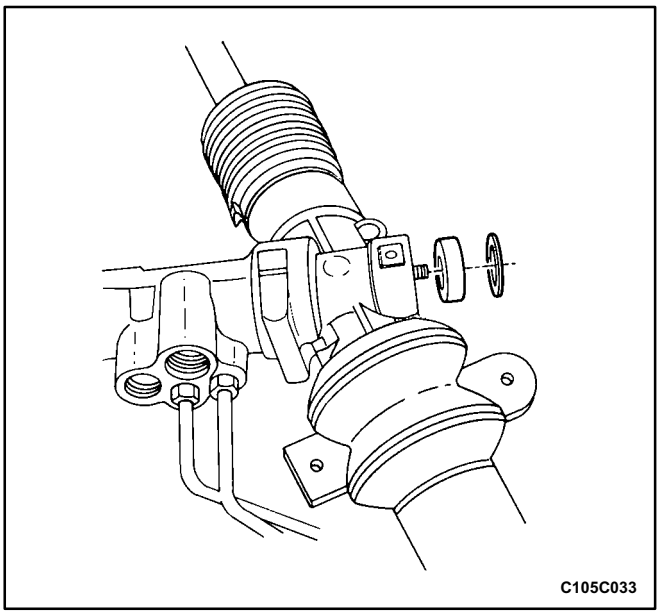

8. Remove the lower bearing assembly retaining ring and press the lower bearing assembly from the lower end of the housing.

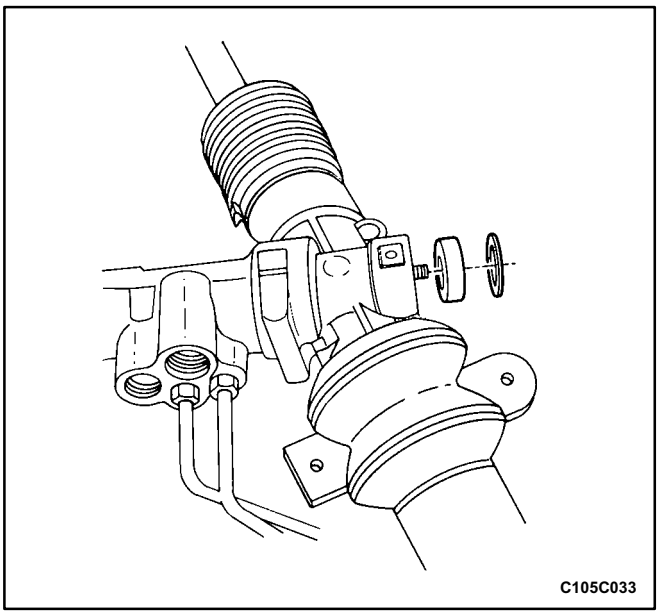

Assembly Procedure

Notice: Coat all the seals with power steering fluid to ensure proper sealing.

1. Install the lower bearing assembly and the lower bearing assembly retaining ring into the lower end of the housing.

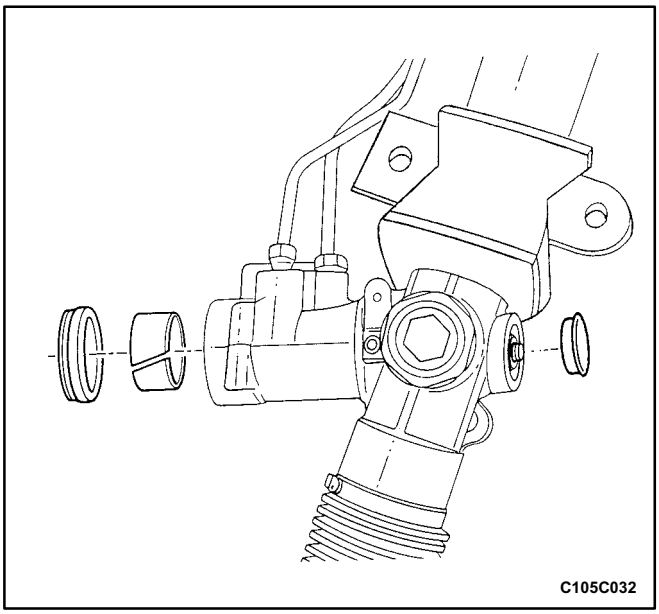

2. Install the lower valve assembly bearing and the bushing.

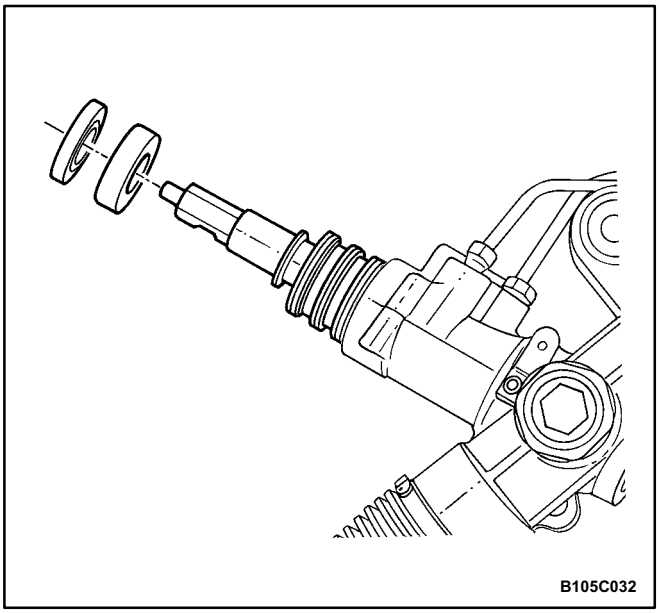

3. Center the rack in the housing.
4. Install the the valve assembly, the stub shaft bearing annulus assembly and a new stub shaft dust seal into the housing.

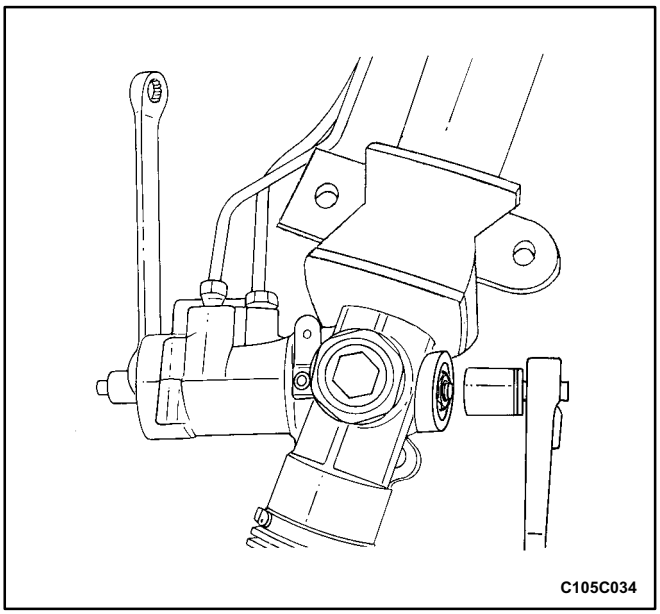

Important: When the valve and pinion assembly is fully seated in the housing, be sure that the notch in the stub shaft and the mark on the housing line up.

Notice: If the stub shaft is not held, damage to the pinion teeth will occur.

5. While holding the stub shaft, install the locknut onto the pinion shaft.

Tighten

Tighten the pinion locknut to 30 N•m (22 lb•ft).

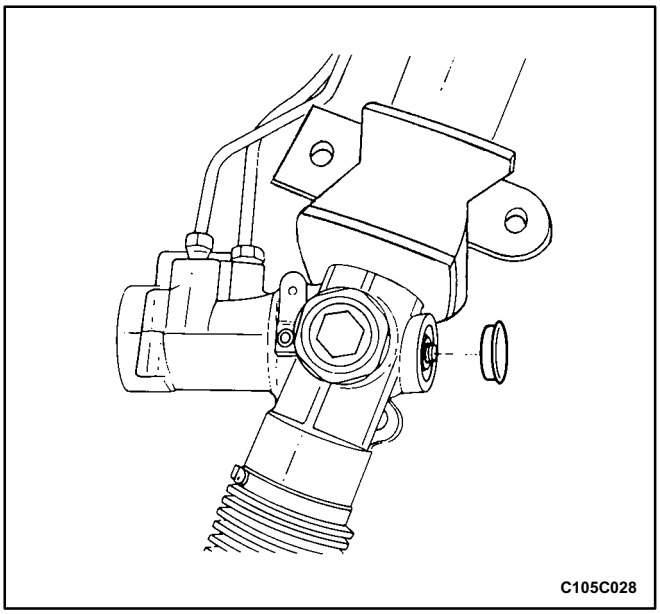

6. Replace the dust cover onto the housing.
7. Install the rack and pinion steering assembly. Refer to „Rack and Pinion Assembly” in this section.

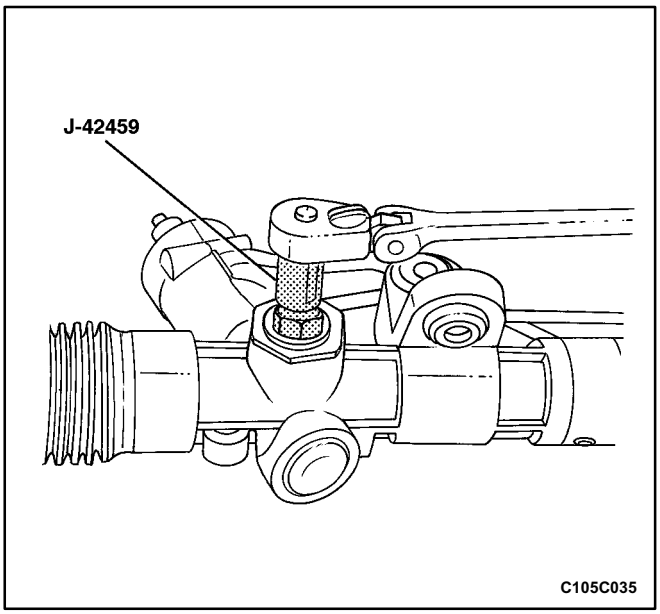

RACK BEARING

Tools Required

J-42459 Rack Guide Spring Cap Wrench

Disassembly Procedure

1. Remove the rack and pinion steering assembly from the vehicle. Refer to „Rack and Pinion Assembly” in this section.
2. Remove the adjuster plug locknut from the adjuster plug, and remove the adjuster plug from the housing with the rack guide spring cap wrench J-42459, or with a 19 mm allen wrench.

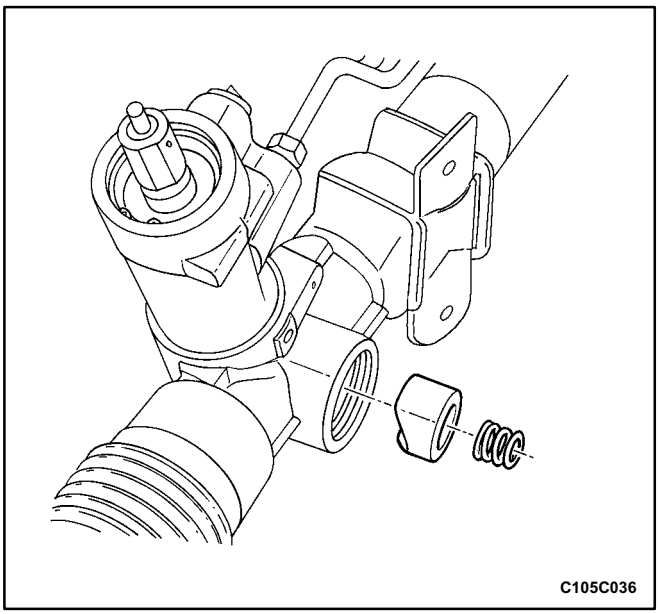

3. Remove the adjuster spring and the rack bearing.

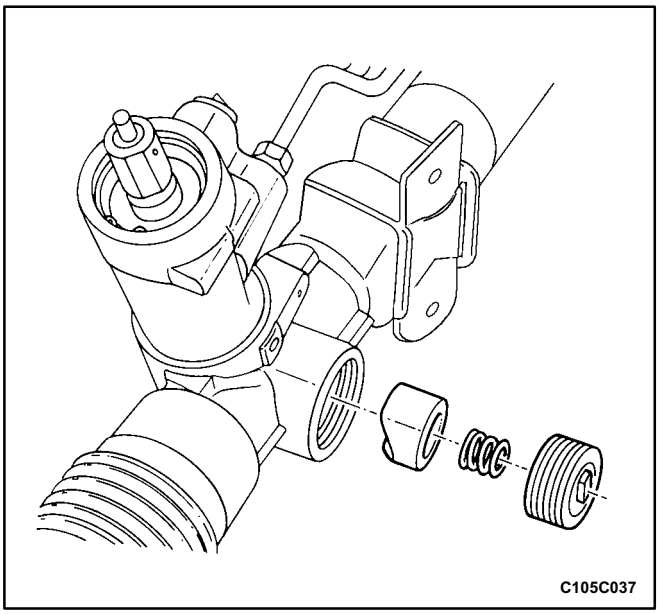

Assembly Procedure

1. Coat the rack bearing, the adjuster spring and the adjuster plug with lithium based grease and install them into the housing.

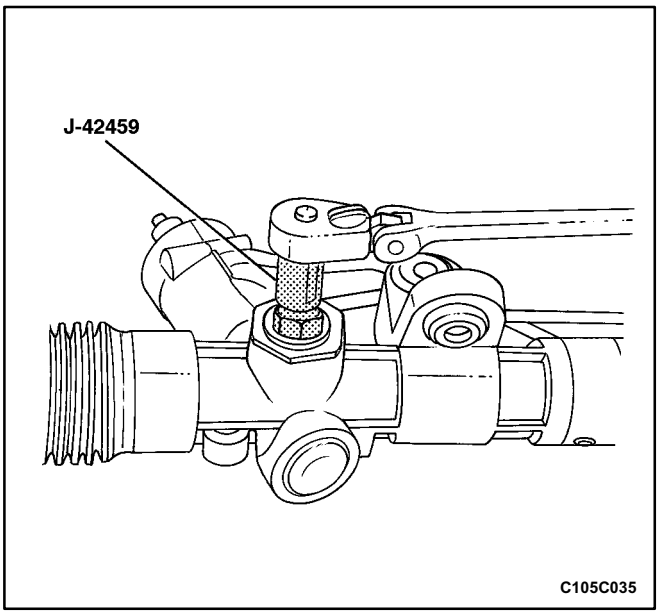

2. With the rack centered, turn the adjuster plug clockwise until a torque of 7 N•m (62 lb•in) is obtained, then back it off by 30 to 40 degrees. Check the pinion torque. Maximum pinion preloaded torque is 1 N•m (9 lb•in).
3. Thread the locknut on the adjuster plug and tighten it.

   Tighten

   Tighten the adjuster plug locknut to 75 N•m (56 lb•ft) while holding the adjuster plug stationary with the rack guide spring cap wrench J-42459 or with a 19 mm allen wrench.
4. Install the rack and pinion assembly. Refer to „Rack and Pinion Assembly” in this section.

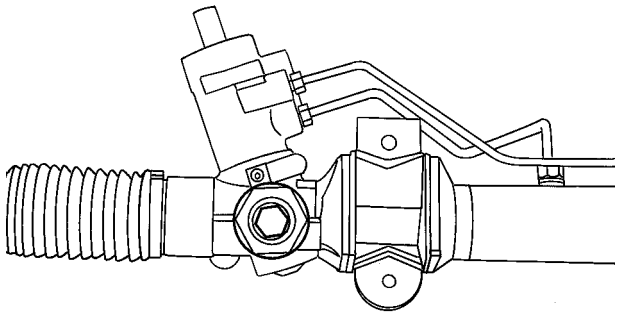

RACK BEARING PRELOAD ADJUSTMENT

Adjustment Procedure

1. Raise and suitably support the vehicle.
2. Center the steering wheel.
3. Remove the power steering gear. Refer to „Rack and Pinion Assembly" in this section.
4. Loosen the locknut and turn the adjuster plug clockwise until a torque of 7 N•m (62 lb•in) is obtained, then loosen it by 30 to 40 degrees. Check the pinion torque. Maximum pinion preloaded torque is 1 N•m (9 lb•in).
5. Tighten the locknut on the adjuster plug while holding the adjuster plug stationary.
6. Install the power steering gear. Refer to „Rack and Pinion Assembly" in this section.
7. Be sure to check the returnability of the steering wheel to center position after adjustment.

Tighten

Tighten the adjuster plug locknut to 75 N•m (56 lb•ft).

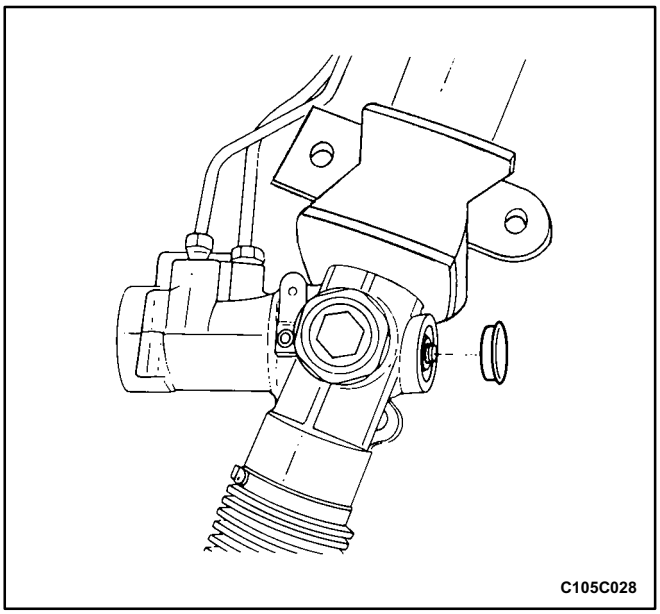

VALVE AND PINION

Disassembly Procedure

1. Remove the rack and pinion steering assembly from the vehicle. Refer to „Rack and Pinion Assembly" in this section.
2. Remove the dust cover from the lower end of the housing.

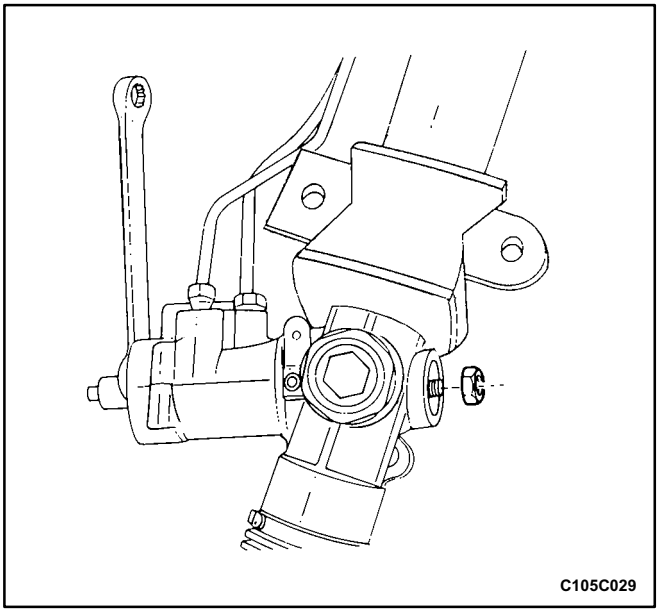

Notice: If the stub shaft is not held, damage to the pinion teeth will occur.

3. While holding the stub shaft, remove the locknut from the pinion.

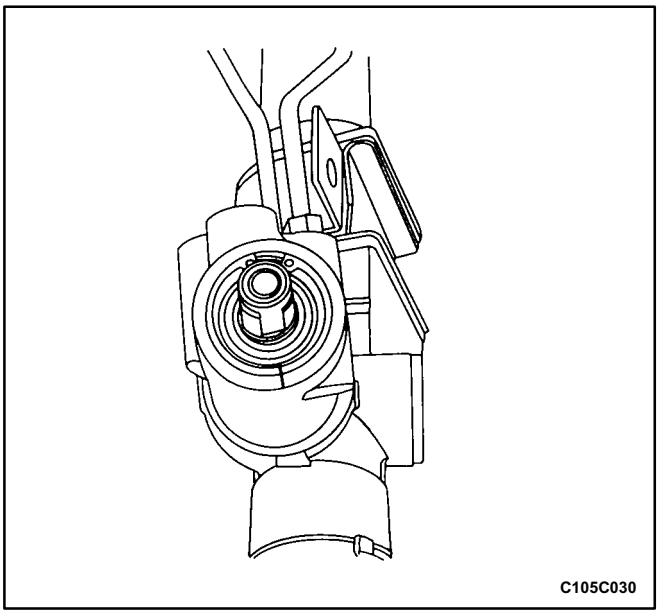

4. With the gear centered, mark the location of the stub shaft notch on the housing to aid in properly installing the pinion and valve assembly.

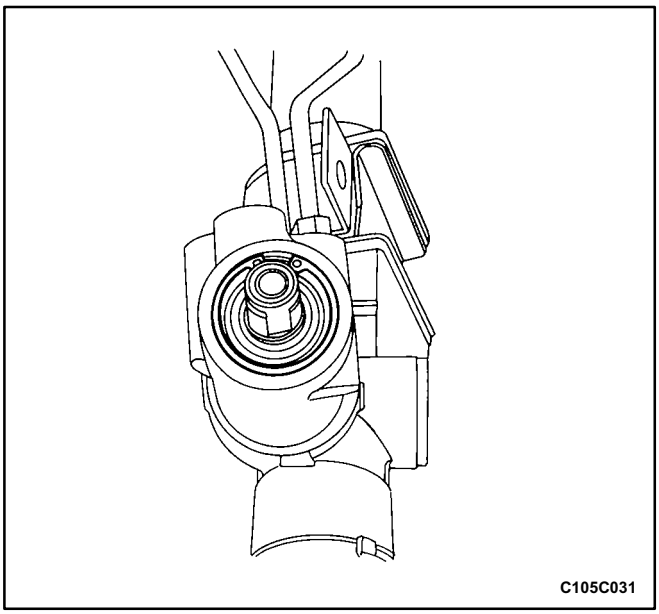

5. Remove the upper housing retaining ring and, using an arbor press, press on the threaded end of the pinion until it is possible to remove the valve and pinion assembly from the housing.

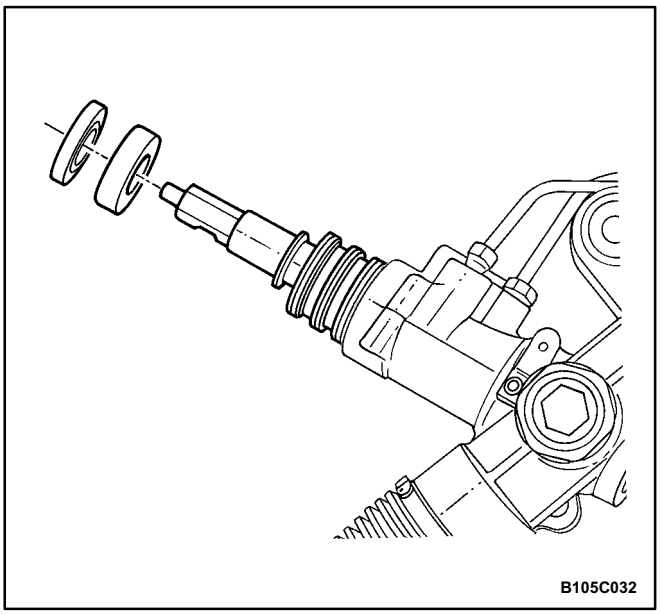

6. Remove the stub shaft dust seal, the stub shaft bearing annulus assembly and the valve and pinion assembly from the housing.

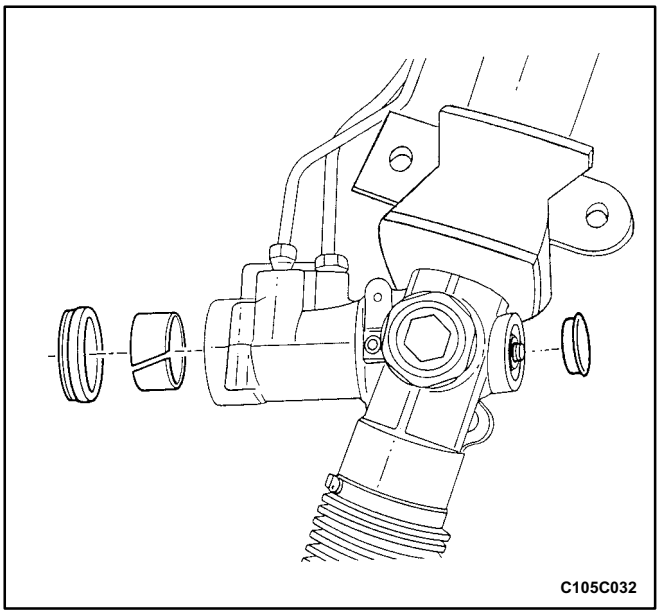

7. Inspect the valve body rings for wear or damage. Replace the valve body rings as needed. Coat the rings with power steering fluid before installation.
8. Remove the lower pinion valve seal and bushing. Discard the seal.

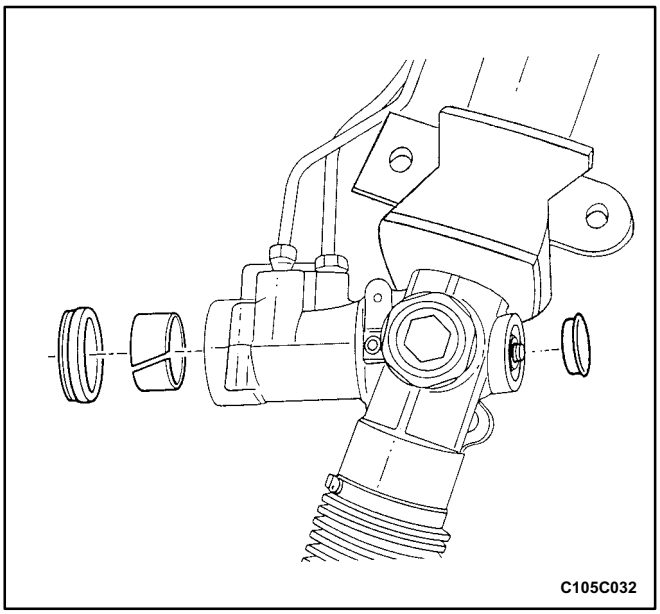

Assembly Procedure

Notice: Coat all of the seals and bushings with power steering fluid to ensure proper sealing.

1. Install the bushing and a new lower pinion valve seal.

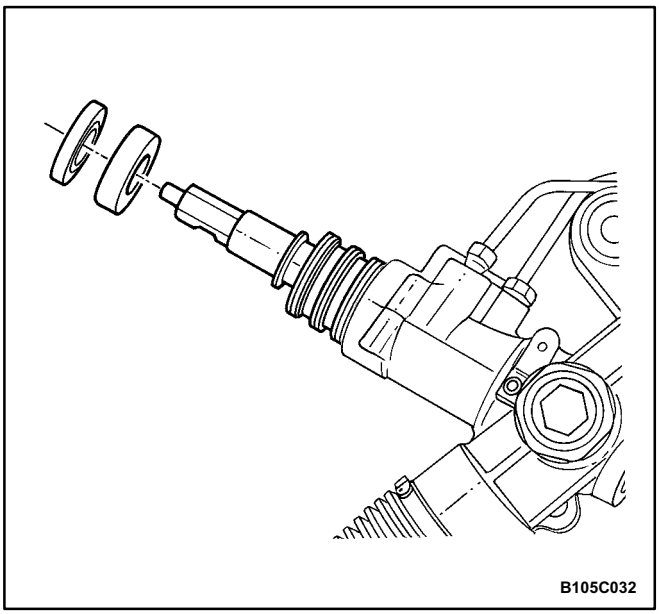

Important: When the valve and pinion assembly is fully seated in the housing, be sure the notch in the stub shaft and the mark on the housing line up. If this is not done the vehicle will not pass the straightahead check and will have poor steering performance.

2. Install the valve and pinion assembly, the stub shaft bearing annulus assembly and the stub shaft dust seal.

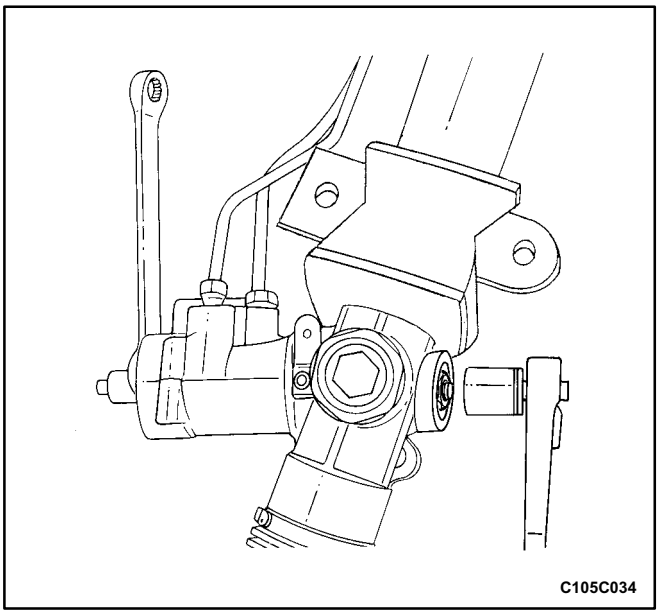

Notice: If the stub shaft is not held, damage to the pinion teeth will occur.

3. While holding the stub shaft, tighten the locknut onto the pinion shaft.

   Tighten

   Tighten the pinion locknut to 30 N•m (22 lb•ft).

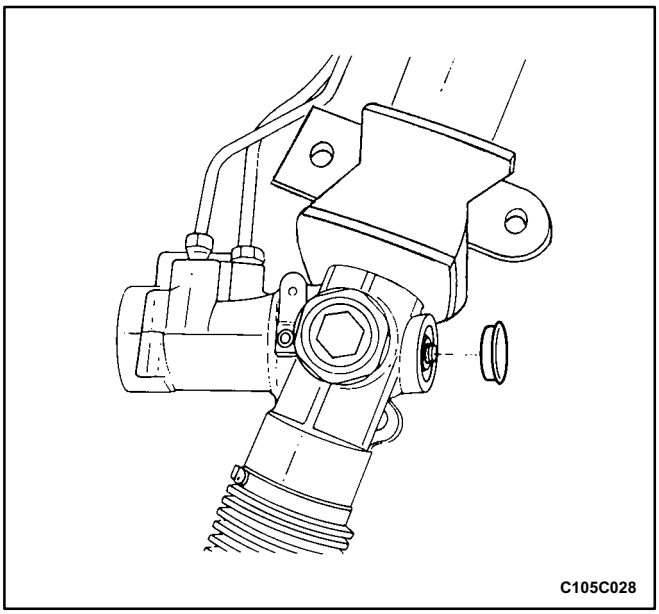

4. Replace the dust cover onto the housing.
5. Install the rack and pinion steering assembly. Refer to „Rack and Pinion Assembly” in this section.
6. Perform the straight ahead check. Refer to „StraightAhead Check” in this section.

GENERAL DESCRIPTION AND SYSTEM OPERATION

POWER RACK AND PINION

The power rack and pinion steering system has a rotary control valve that directs hydraulic fluid coming from the hydraulic pump to one side or the other side of the rack piston. The integral rack piston is attached to the rack. The rack piston converts hydraulic pressure to a linear force that moves the rack left or right. That force is then transmitted through the tie rods to the steering knuckles, which turn the wheels.

If power rack and pinion steering is not available, manual rack and pinion control is used; however, with this system, more steering effort is required. The movement of the steering wheel is transferred to the pinion. The rotary movement of the pinion is then transferred through the pinion threads, which mesh with teeth on the rack, thereby causing the rack to move in a linear direction.

A vane type of hydraulic pump provides hydraulic pressure for both steering systems.

SPEED SENSITIVE POWER STEERING SYSTEM

The speed sensitive power steering (SSPS) system varies the driver effort required to steer as the vehicle speed changes. At low speeds, the system provides maximum power assist for easy turning and parking maneuvers. At higher speeds, the steering power is reduced to provide the driver with firmer steering and directional stability. The SSPS system accomplishes this by reducing the amount of power steering fluid flow from the power steering pump to the power steering gear as the vehicle speed increases. When the vehicle is stationary, the SSPS system provides maximum fluid flow to the steering gear. As the vehicle speed increases, the fluid flow to the steering gear is decreased.

Control Module

The SSPS control module processes the vehicle speed information from the engine control module (ECM) and uses the steering wheel rotation sensor to provide a control signal to the electronic variable orifice (EVO) actuator located on the power steering pump.

Electronic Variable Orifice (EVO) Actuator

The electronic variable orifice (EVO) actuator is located on the power steering pump and contains a solenoid□ operated pintle valve. Fluid leaving the pump passes through an orifice in the actuator tip. When the EVO actuator is powered by the SSPS control module, the pintle moves into the orifice and reduces the power steering fluid flow. As the vehicle speed increases, current from the SSPS control module increases, and the pintle blocks more and more of the orifice.

Steering Wheel Rotation Sensor

The steering wheel rotation sensor is located at the end of the steering column housing and is used to send a signal to the controller when abrupt or evasive steering maneuvers are needed.

Power Steering Pressure Hose

SSPS vehicles have a specific pressure hose assembly which includes an in line check valve in the rack and pinion assembly. This reduces the amount of steering wheel „kick” when driving over irregular road surfaces while operating at speeds with reduced flow rate and pressure.

Power Rack and Pinion

Except for differences in valve machining, the design of the SSPS power rack and pinion assembly is the same as for the a non SSPS system. The steering wheel movement is transferred to the pinion via the intermediate shaft. The pinion moves the rack left or right through meshing the pinion and the rack teeth. The force is then transmitted through the tie rods and steering knuckle to steer the wheels.

The power rack and pinion steering system has a rotary control valve which directs the hydraulic fluid from the power steering pump to one side or the other side of the rack piston. The piston is attached to the rack and uses hydraulic pressure to move the rack left or right. The rotary control valve regulates the degree of assist by responding to the driver's torque input.

If hydraulic assist is not available, manual control is maintained. However, under this condition, more steering effort is required.

Power Steering Pump

The standard vane type pump, which provides hydraulic pressure for the system, incorporates a special discharge fitting to hold the EVO actuator.

System Operation

System operation originates with input from the vehicle speed sensor via the engine control module to the SSPS control module. The SSPS control module sends a signal to the SSPS actuator to vary the rate of fluid flow output by the power steering pump.

Circuit Operation

The SSPS system uses inputs from the speed sensor and steering wheel rotation sensor to the SSPS controller to determine the desired amount of power steering assist.

The SSPS control module constantly compares the amount of current flowing through the EVO actuator to the desired current it has calculated. The EVO actuator has a pintle that moves in and out of an orifice, regulating power steering fluid flow. The SSPS control module can change the amount of current flowing through the EVO actuator by varying the output duty cycle. If the EVO actuator is disconnected, the pintle will be pulled out of the orifice for maximum power steering assist.

The SSPS control module has the ability to detect faults in the steering wheel rotation sensor, the EVO actuator, or the circuitry to those components. Any default detected will cause the power steering assist to remain

at maximum with the pintle in its normally retracted position for all speeds.

When the system is operating normally, increasing the vehicle speed will decrease power steering assist, allowing the driver to have improved road feel and directional stability. When sudden steering wheel turns are made, as in evasive maneuvers, they are detected by the SSPS control module through the steering wheel rotation sensor. When detected, the SSPS control module reduces current to the EVO actuator, allowing greater power steering assist.

SECTION 6E

STEERING WHEEL AND COLUMN

CAUTION: Disconnect the negative battery cable before removing or installing any electrical unit or when a tool or equipment could easily come in contact with exposed electrical terminals. Disconnecting this cable will help prevent personal injury and damage to the vehicle. The ignition must also be in LOCK unless otherwise noted.

TABLE OF CONTENTS

Specifications 6E-1
Fastener Tightening Specifications 6E-1
Special Tools 6E-2
Special Tools Table 6E-2
Diagnosis 6E-2
Steering Column Diagnosis 6E-2
Maintenance and Repair 6E-7
On-Vehicle Service 6E-7
Headlamp/Turn Signal Switch and Lever 6E-7
Wiper/Cruise Control/Switch and Lever 6E-9
Steering Wheel Rotation Sensor 6E-11
Steering Wheel Without SIR 6E-12
Steering Wheel With SIR 6E-14
Ignition Lock Cylinder and Switch 6E-15
Column 6E-17
Unit Repair 6E-22
Tilt Steering Column 6E-22
General Description and System Operation 6E-34
Steering Wheel and Column 6E-34
Ignition Switch Keyhole Lamp 6E-34
Key Reminder 6E-34

SPECIFICATIONS

FASTENER TIGHTENING SPECIFICATIONS

Application	N•m	Lb•Ft	Lb•In
Ignition Switch Housing Shear Bolts	11	-	97
Ignition Switch Retaining Screw	2	-	18
Steering Column Jacket Assembly Front Bracket Bolts	22	16	-
Steering Column Jacket Assembly Rear Bracket Nuts	22	16	-
Steering Shaft Universal Joint Pinch Bolt	25	18	-
Steering Wheel Horn Cap Screws	4.5	-	40
Steering Wheel Nut	23	17	-
Steering Wheel Rotation Sensor Retaining Screw	2	-	18
Support Housing Screws	16	12	-
Turn Signal Switch Housing Screws	3	-	27
Upper and Lower Steering Column Cover Panel Screws	3	-	27

SPECIAL TOOLS

SPECIAL TOOLS TABLE

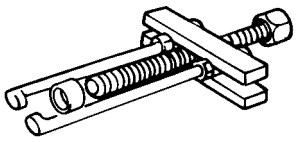 A110B008	**KM-210-A Steering Wheel Puller**
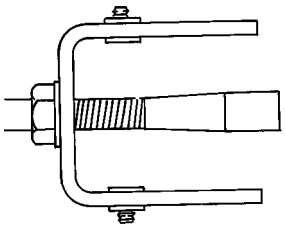 A105E053	**J-23653-A Lock Plate Compressor**
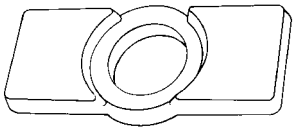 A105E052	**J-36667 Lock Plate Adapter (tilt)**
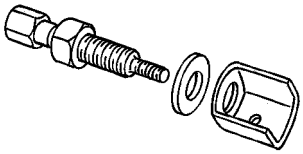 A105E063	**J-21854-01 Pivot Pin Remover**

DIAGNOSIS

STEERING COLUMN DIAGNOSIS

Lock System

Lock System Will Not Unlock

Checks	Action
Check the lock cylinder for damage.	Replace the lock cylinder.
Check the ignition switch for lack of free movement.	Lubricate the ignition switch.
Check the steering column housing for binding or damage.	Remove the steering shaft and clear the steering column housing. Replace the steering column housing as needed.

Lock System Will Not Lock

Checks	Action
Check the lock cylinder for damage.	Replace the lock cylinder.
Check the ignition switch for a lack of free movement.	Lubricate the ignition switch.
Check the steering column housing for binding or damage.	Remove the steering shaft and clear the steering column housing. Replace the steering column housing as needed.

High Lock Effort

Checks	Action
Check the lock cylinder for damage.	Replace the lock cylinder.
Check the ignition switch for lack of free movement.	Lubricate the ignition switch.
Check for extreme misalignment of the housing to the cover.	Realign the cover on the housing. Replace the cover as needed.
Check for a bent ignition switch mounting bracket.	Replace the ignition switch mounting bracket.

Key Cannot Be Removed in the LOCK Position

Checks	Action
Check to see that the ignition switch is set correctly.	Reset the ignition switch.
Check the lock cylinder for damage.	Replace the lock cylinder.

Column

Noise in the Column

Checks	Action
Check the steering gear to column joints for improper installation.	Tighten the steering shaft universal joint pinch bolts. Replace the steering shaft joints as needed.
Check the steering shaft bearing for wear or damage.	Replace the steering shaft bearing.
Check the spherical joint for lack of lubrication.	Lubricate the spherical joint.
Check the steering shaft for lack of lubrication.	Lubricate the steering shaft bearing.
Check the shaft lock snap ring for improper seating.	Adjust the shaft lock snap ring. Replace the shaft lock snap ring as needed.

High Steering Shaft Effort

Checks	Action
Check the steering shaft bearing for wear or damage.	Replace the steering shaft bearing.
Check for an improperly installed or deformed dust seal.	Replace the dust seal.
Check for a damaged upper or lower bearing.	Replace the upper or the lower bearing.
Check the steering shaft universal joints for a lack of free movement.	Lubricate the steering shaft universal joints. Replace the steering shaft universal joints as needed.

Lash in the Steering Column

Checks	Action
Check the steering column bracket mounting bolts for improper installation.	Tighten the steering column bracket mounting bolts.
Check for broken weld nuts on the steering column jacket.	Replace the steering column jacket.
Check for loose steering column housingtosteering column jacket support screws.	Tighten the support screws.

Loose Steering Wheel

Checks	Action
Check for excessive clearance between the holes in the steering wheel support or the housing and the pivot pin diameters.	Replace the pivot pins with pivot pins of the correct size.
Check to see if the upper bearing is seated correctly in the housing.	Correctly seat the upper bearing. Replace the upper bearing as needed.
Check for loose steering column housing support screws.	Tighten the steering column housing support screws.

Noise When Tilting the Column

Checks	Action
Check for worn upper tilt bumpers.	Replace the upper tilt bumpers.
Check for tilt spring binding.	Adjust the tilt spring. Replace the tilt spring as needed.

Turn Signal/Dimmer Switch

Turn Signal Will Not Stay in the Turn Position

Checks	Action
Check the turn signal switch for an improper installation.	Remove and inspect the turn signal switch. Reinstall the switch.
Check the cancelling mechanism for broken or missing components.	Replace the cancelling mechanism.
Check the turn signal switch housing for foreign material.	Remove any foreign material.

Turn Signal Will Not Cancel

Checks	Action
Check the cancelling mechanism for broken or missing components.	Replace the cancelling mechanism.

Turn Signal/Dimmer Switch Difficult to Operate

Checks	Action
Check the turn signal/dimmer switch and turn signal/dimmer switch lever for improper installation.	Remove and inspect the turn signal/dimmer switch and signal/dimmer switch lever. Reinstall the signal/dimmer switch and signal/dimmer switch lever.
Check the signal/dimmer switch housing for foreign material.	Remove any foreign material.

Turn Signal Will Not Indicate Lane Change

Checks	Action
Check for a broken lane change pressure pad or a broken spring hanger.	Replace the lane change pressure pad or the spring hanger.
Check for improper functioning of the lane change spring.	Replace the lane change spring.
Check the turn signal switch for improper installation.	Replace the turn signal switch.

No Turn Signal Lights

Checks	Action
Check for an inoperative turn signal flasher.	Replace the turn signal flasher.
Check for a faulty turn signal switch.	Replace the turn signal switch.
Check the chassis to column connector for an improper connection.	Reconnect the chassis to column connector.

Turn Indicator Lights On, but Not Flashing

Checks	Action
Check for an inoperative turn signal flasher.	Replace the turn signal flasher.
Check for a faulty turn signal switch.	Replace the turn signal switch.
Check the chassis to column connector for an improper connection.	Reconnect the chassis to column connector.

Front or Rear Turn Signal Lights Not Flashing

Checks	Action
Check for a faulty turn signal switch.	Replace the turn signal switch.
Check the chassis to column connector for an improper connection.	Reconnect the chassis to column connector.

Turn Signal Lights Flash Very Slowly

Checks	Action
Check the chassis to column connector for an improper connection.	Reconnect the chassis to column connector.

Ignition Switch

Electrical System Will Not Function

Checks	Action
Check the ignition switch for damage.	Replace the ignition switch.
Check the ignition switch for improper installation.	Remove and inspect the ignition switch. Reinstall the ignition switch.
Check the ignition switch electrical connector for improper installation.	Reconnect the ignition switch electrical connector. Replace the ignition switch electrical connector.

Ignition Switch Will Not Turn

Checks	Action
Check the ignition switch for damage.	Replace the ignition switch.
Check the ignition switch for improper installation.	Remove and inspect the ignition switch. Reinstall the ignition switch.

Wiper/Cruise Control/Switch and Lever

Switch Inoperative: No LOW, HIGH, INTERMITTENT or WASH

Checks	Action
Check the wiper switch for damage.	Replace the wiper/cruise control switch.
Check the wiper switch for improper installation.	Remove and inspect the wiper/cruise control switch. Reinstall the wiper/cruise control switch.
Check the cruise control switch for damage.	Replace the wiper/cruise control switch.

MAINTENANCE AND REPAIR

ON-VEHICLE SERVICE

HEADLAMP/TURN SIGNAL SWITCH AND LEVER

(Left-Hand Drive Shown, Right-Hand Dirve Similar)

Removal Procedure

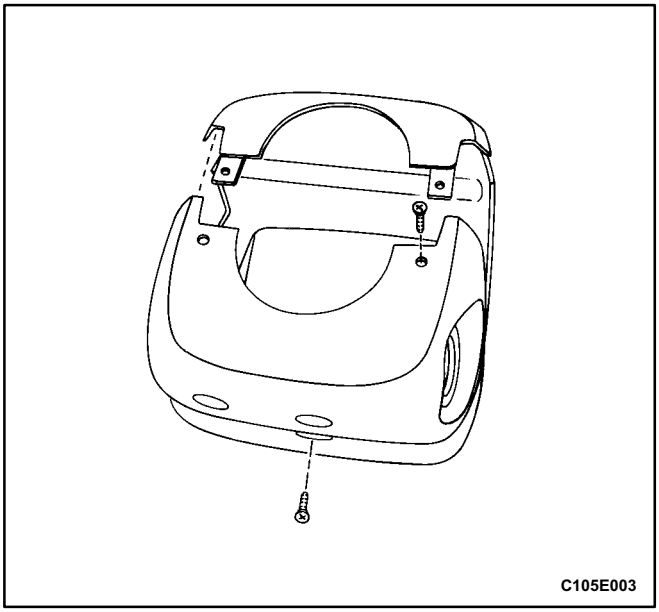

1. Disconnect the negative battery cable.
2. Remove the upper and the lower steering column cover panel screws.
3. Remove the upper and the lower steering column cover panels.

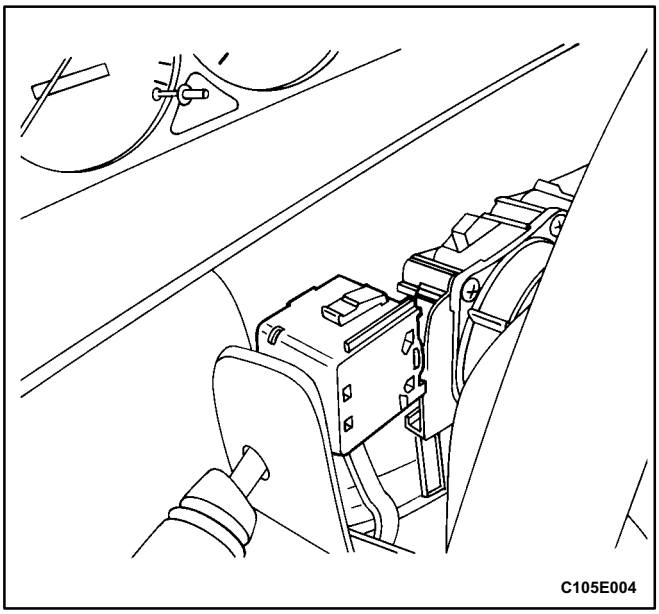

4. Remove the turn signal switch by pushing in on the tabs on the top and the bottom of the switch housing.

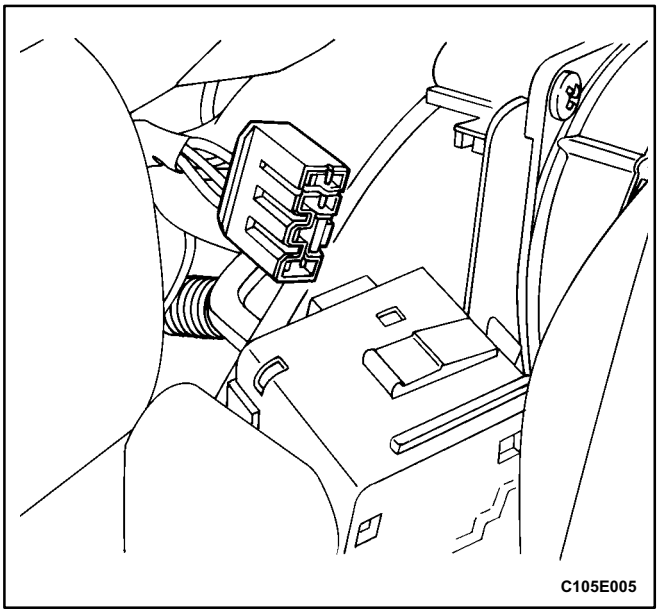

5. Disconnect the electrical connections from the turn signal switch.

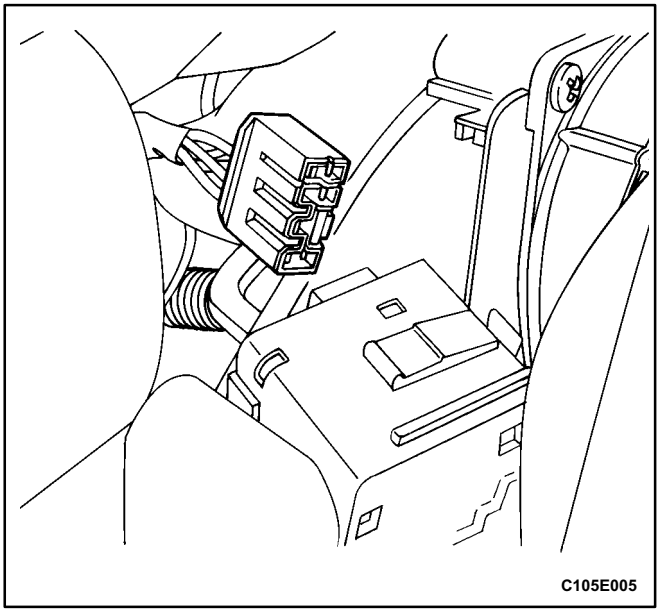

Installation Procedure

1. Connect the electrical connections to the turn signal switch.

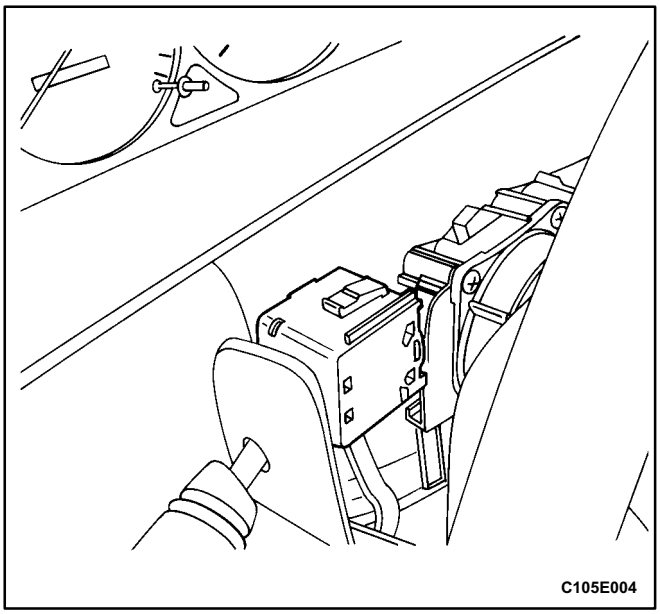

2. Install the turn signal switch by snapping it into the switch housing.

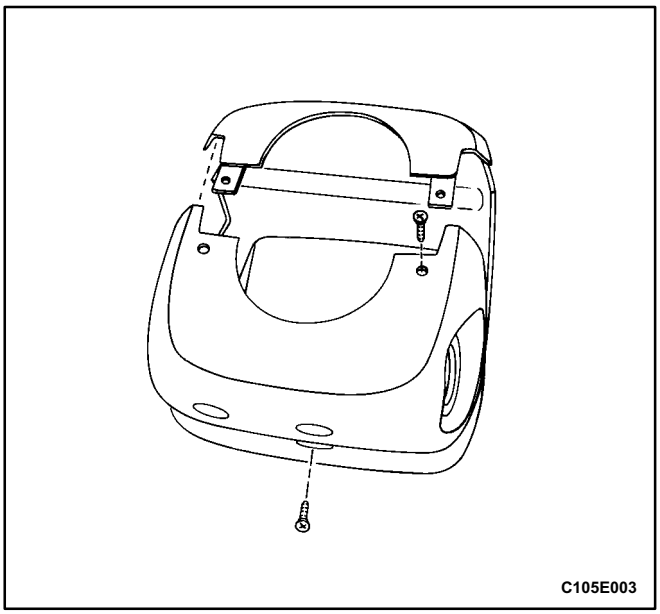

3. Install the upper and the lower steering column cover panels. Install the upper and the lower steering column cover panel screws.

   Tighten

   Tighten the upper and the lower steering column cover panel screws to 3 N•m (27 lb•in).

4. Connect the negative battery cable.

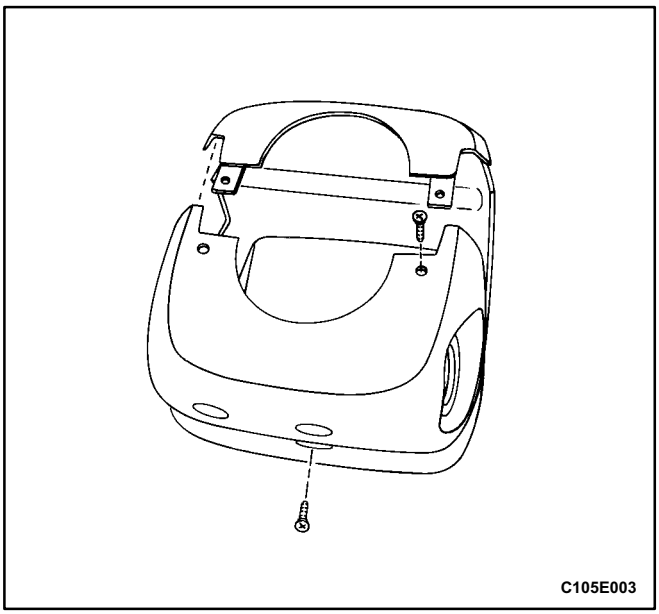

WIPER/CRUISE CONTROL/SWITCH AND LEVER

(Left-Hand Drive Shown, Right-Hand Drive Similar)

Removal Procedure

1. Disconnect the negative battery cable.
2. Remove the upper and the lower steering column cover panel screws.
3. Remove the upper and the lower steering column cover panels.

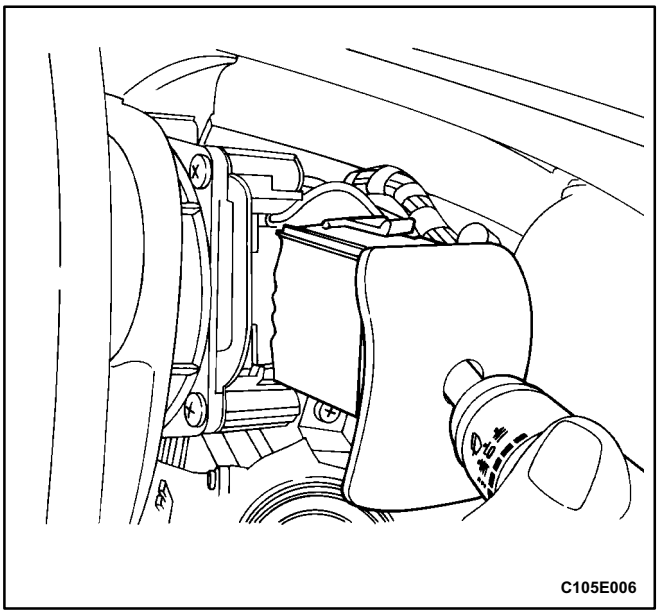

4. Remove the wiper switch by pushing in on the tabs on the top and the bottom of the switch housing.

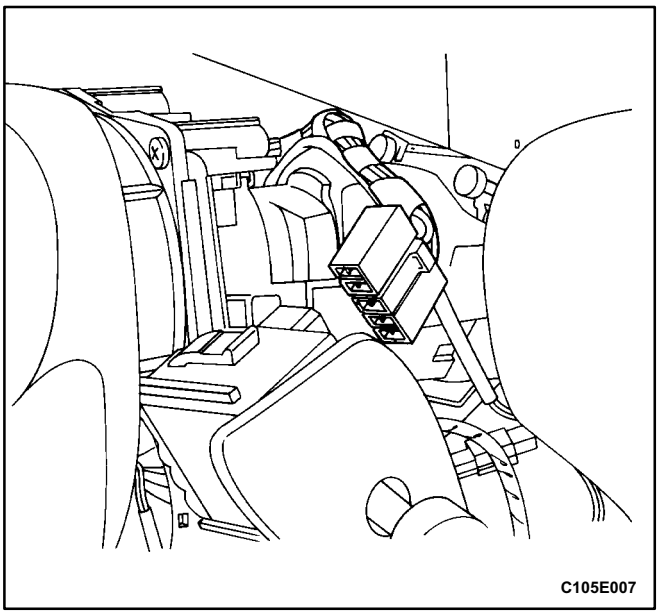

5. Disconnect the electrical connector from the wiper switch. Disconnect the cruise control connector, if so equipped.

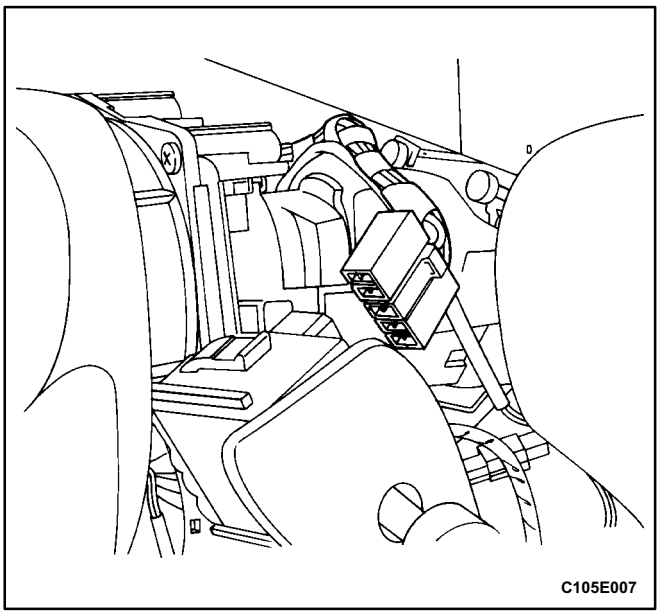

Installation Procedure

1. Connect the electrical connector to the wiper switch. Connect the cruise control connector, if so equipped.

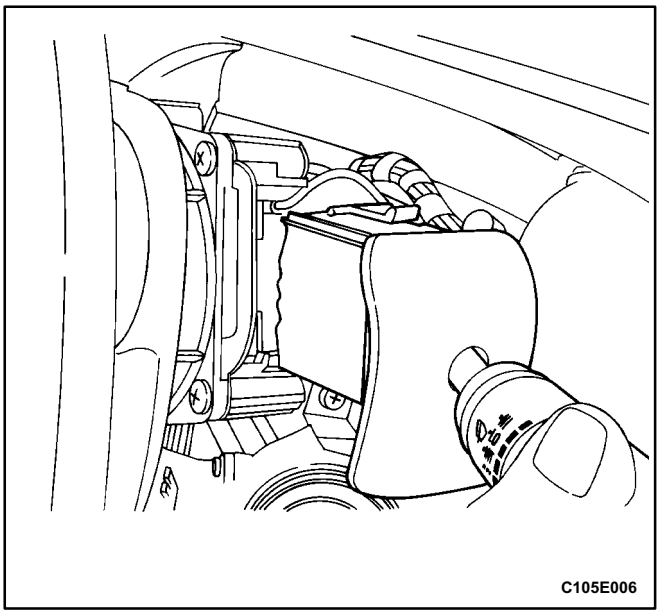

2. Install the wiper switch by snapping it into the switch housing.

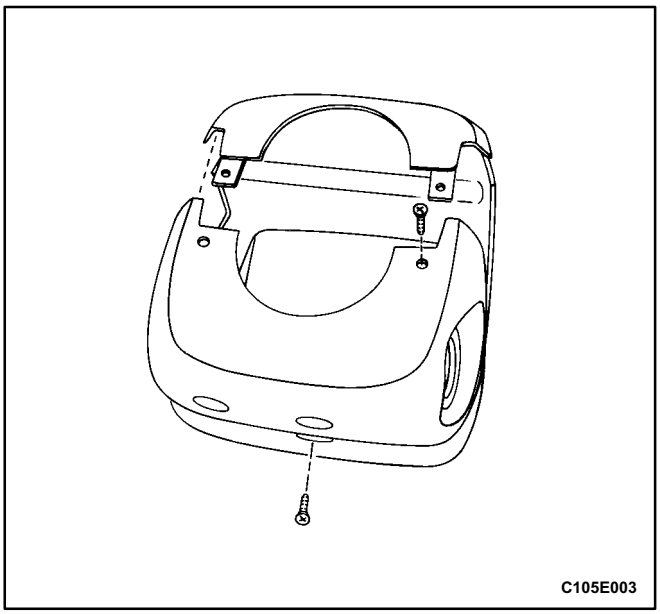

3. Install the upper and the lower steering column cover panels. Install the upper and the lower steering column cover panel screws.

   Tighten

   Tighten the upper and the lower steering column cover panel screws to 3 N•m (27 lb•in).

4. Connect the negative battery cable.

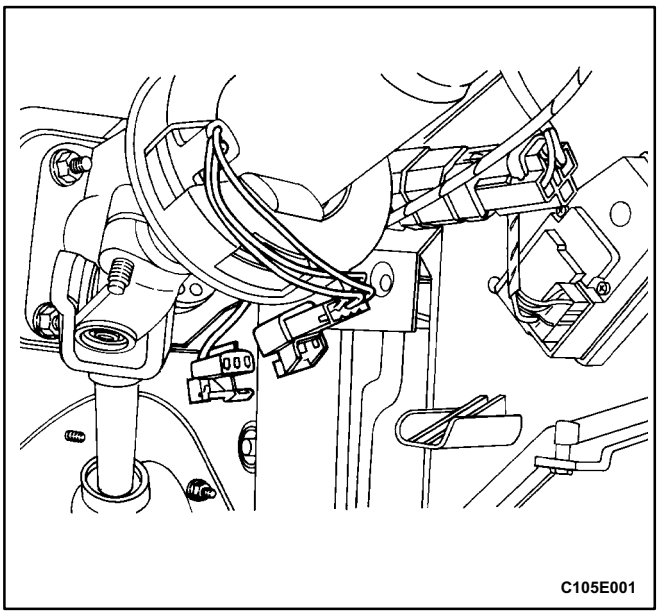

STEERING WHEEL ROTATION SENSOR

(Left-Hand Drive Shown, Right-Hand Drive Similar)

Removal Procedure

1. Disconnect the negative battery cable.
2. Remove the upper and the lower instrument trim panels. Refer to *Section 9E, Instrumentation/Driver Information*.
3. Disconnect the steering wheel rotation sensor electrical connector.

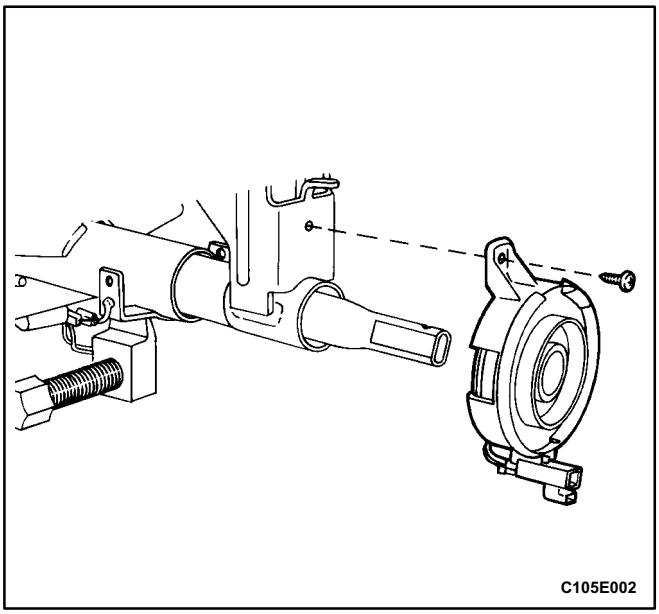

4. Remove the intermediate shaft from the steering column to allow removal of the steering wheel rotation sensor. Refer to „Steering Column” in this section.
5. Remove the retaining screw from the steering wheel rotation sensor.
6. Remove the steering wheel rotation sensor.

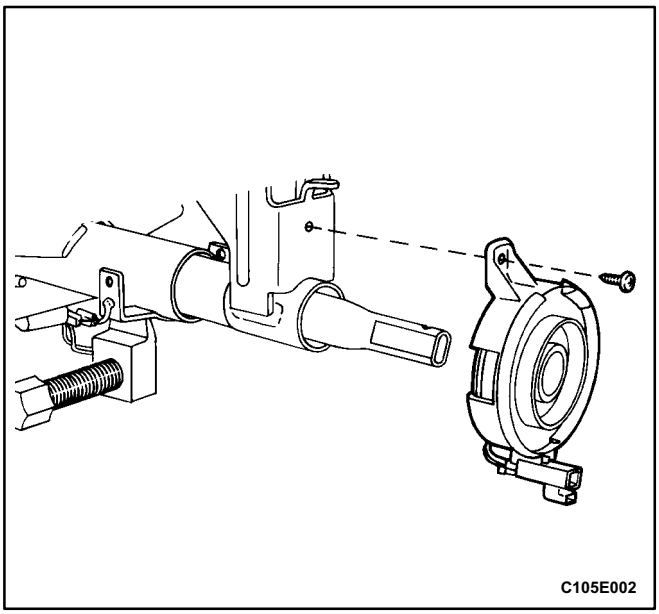

Installation Procedure

1. Install the steering wheel rotation sensor with the retaining screw.

   Tighten

   Tighten the steering wheel rotation sensor retaining screw to 2 N•m (18 lb•in).

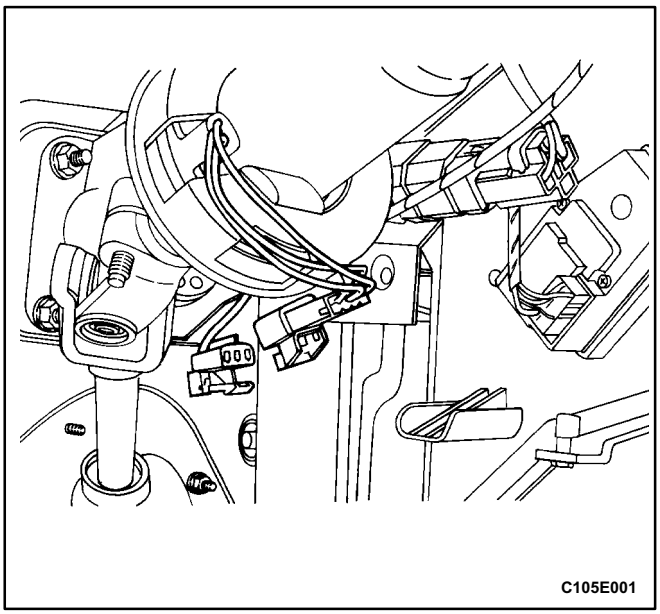

2. Install the intermediate shaft onto the steering column. Refer to „Steering Column” in this section.
3. Connect the steering wheel rotation sensor electrical connector.
4. Install the upper and the lower instrument trim panels. Refer to *Section 9E, Instrumentation/Driver Information*.
5. Connect the negative battery cable.

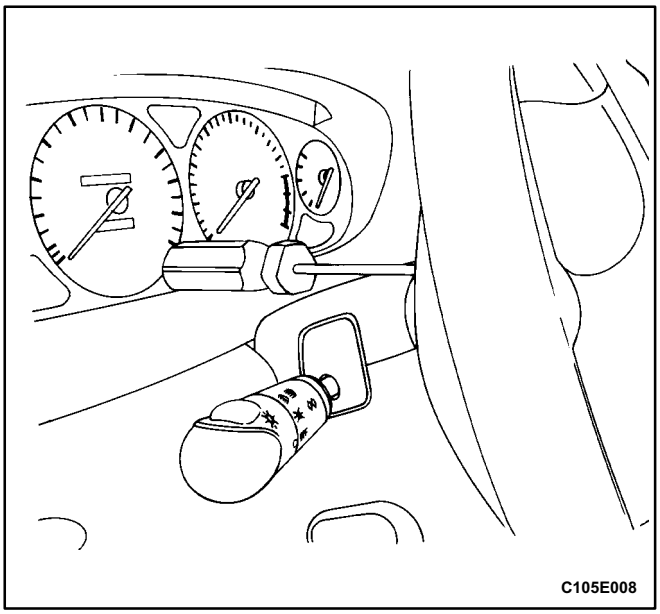

STEERING WHEEL WITHOUT SIR

Tools Required

KM-210-A Steering Wheel Puller

Removal Procedure

1. Disconnect the negative battery cable.
2. Rotate the steering wheel to allow access to the steering wheel horn cap screw. Remove the horn cap screw.
3. Rotate the steering wheel to allow access to the other steering wheel horn cap screw. Remove the horn cap screw.

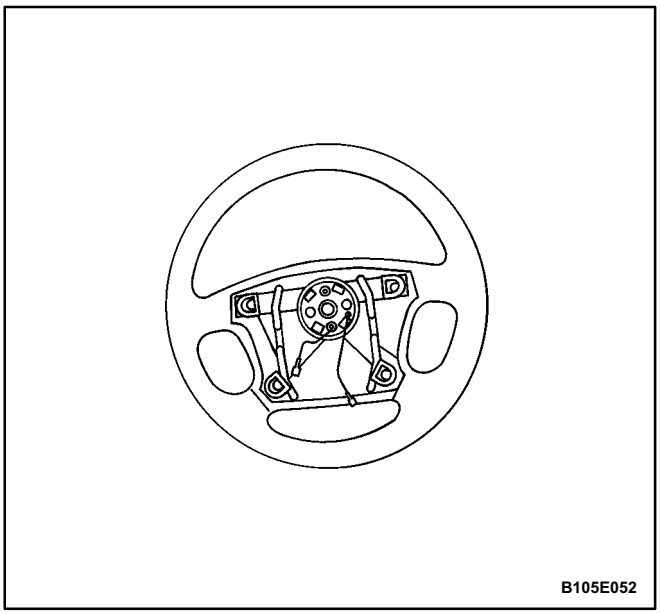

4. Remove the steering wheel horn cap and disconnect the horn leads.

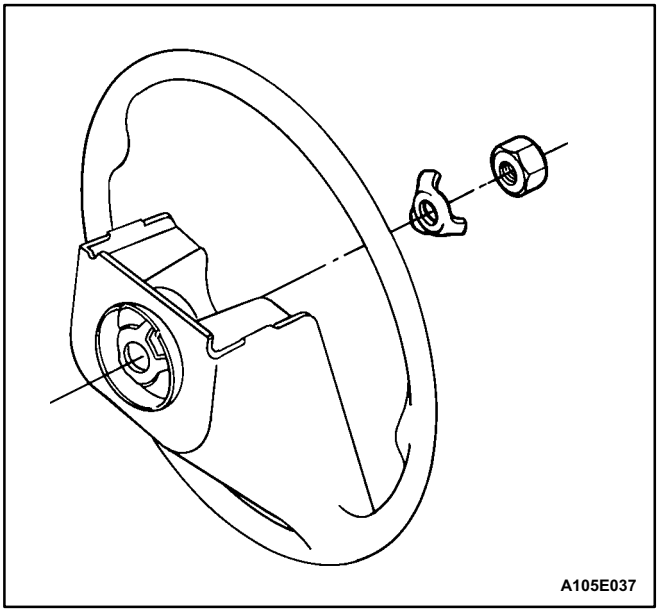

5. Remove the steering wheel nut and the retaining clip.

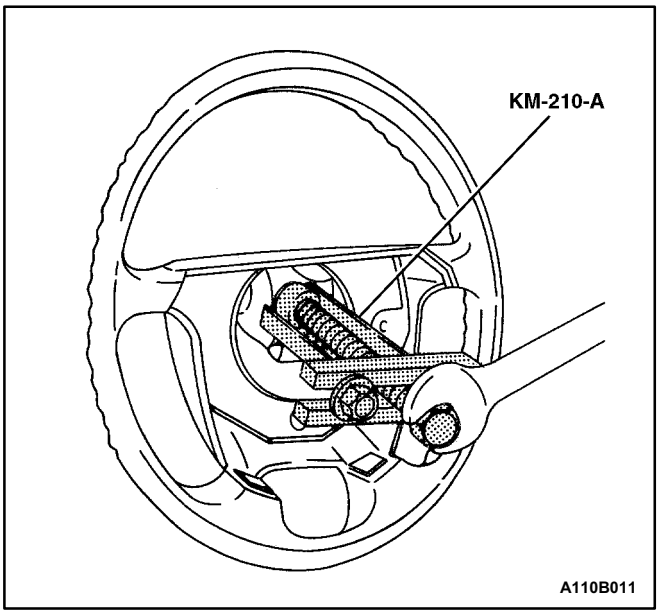

Important: In order to install the steering wheel correctly, match mark the steering column shaft to the steering wheel.

6. Remove the steering wheel using the steering wheel puller KM-210-A.
7. Unclip the contact ring from the steering wheel, if necessary.

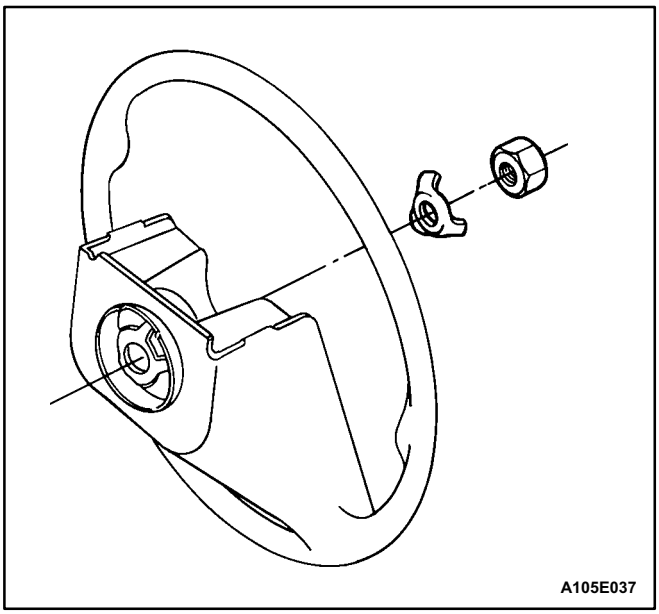

Installation Procedure

1. Clip the contact ring on the steering wheel, if necessary.
2. Align the match marks on the steering wheel and the steering column shaft.
3. Install the retaining clip and a new steering wheel nut.

Tighten

Tighten the steering wheel nut to 23 N•m (17 lb•ft).

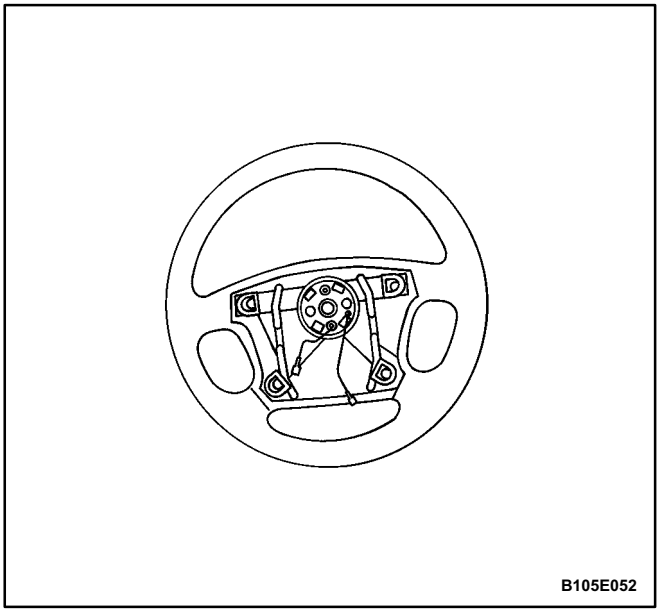

4. Bend the tabs to secure the retaining clip.
5. Connect the horn leads and install the steering wheel horn cap.

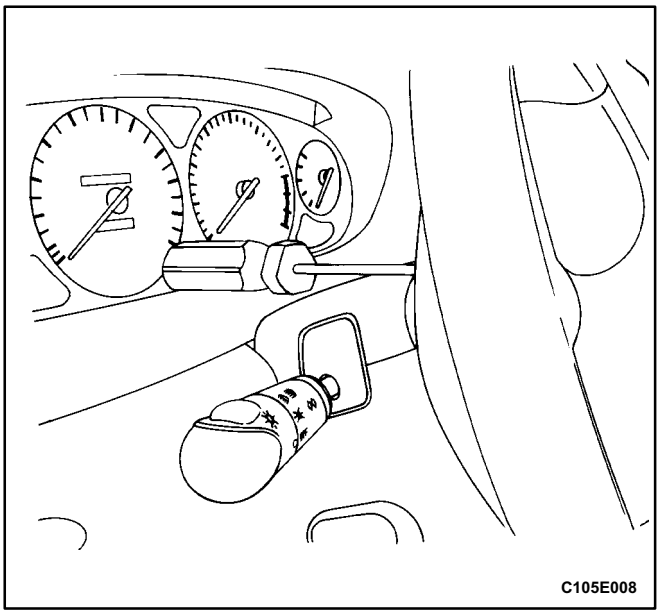

6. Rotate the steering wheel to allow access to the steering wheel horn cap screw. Install the horn cap screw.
7. Rotate the steering wheel to allow access to the other steering wheel horn cap screw. Install the horn cap screw.

Tighten

Tighten both steering wheel horn cap screws to 4.5 N•m (40 lb•in).

8. Connect the negative battery cable.

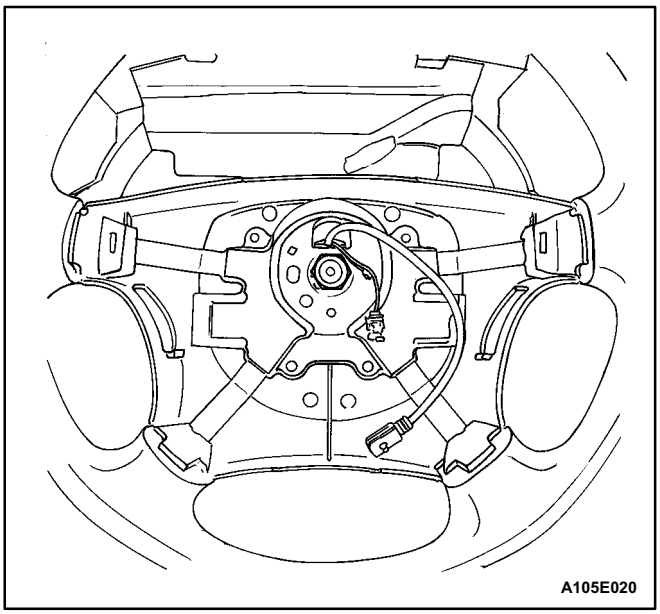

STEERING WHEEL WITH SIR

Tools Required

KM-210-A Steering Wheel Puller

Removal Procedure

1. Disconnect the negative battery cable.
2. Remove the SIR module. Refer to *Section 8B, Supplemental Inflatable Restraints*.
3. Remove the steering wheel nut and the retaining clip.

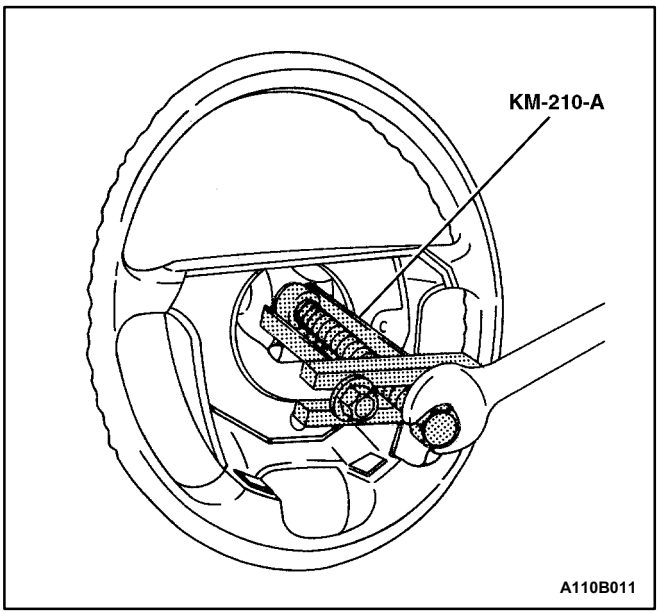

Important: In order to install the steering wheel correctly, match mark the steering column shaft to the steering wheel.

4. Remove the steering wheel using the steering wheel puller KM-210-A.
5. Unclip the contact ring from the steering wheel, if necessary.

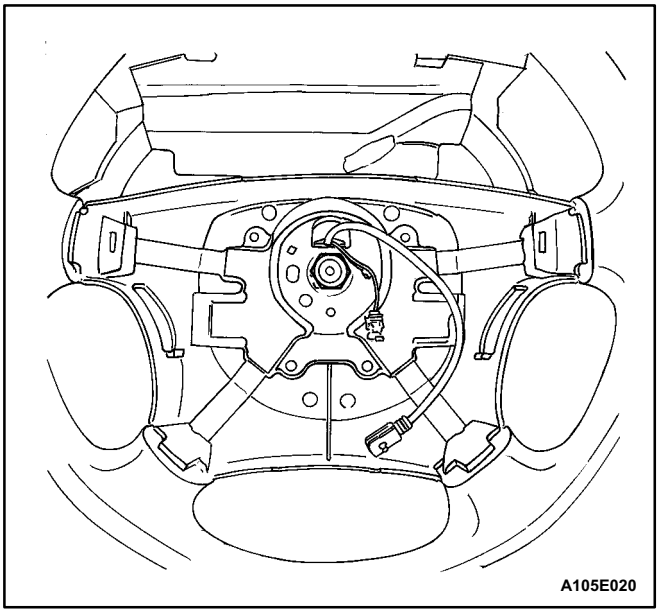

Installation Procedure

1. Clip the contact ring on the steering wheel, if necessary.

Important: In order to correctly install the steering wheel, matchmark the steering column shaft to the steering wheel.

2. Align the match marks on the steering wheel and the steering column shaft. Turn the signal canceling cam on the wheel to the left.
3. Install the retaining clip and the steering wheel nut.

Tighten

Tighten the steering wheel nut to 23 N•m (17 lb•ft).

4. Bend the tabs to secure the retaining clip.
5. Install the SIR Module. Refer to *Section 8B, Supplemental Inflatable Restraints*.
6. Connect the negative battery cable.

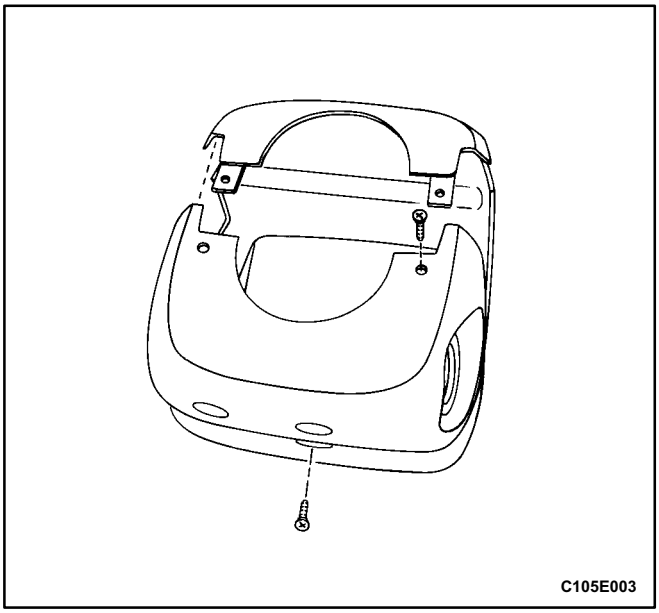

IGNITION LOCK CYLINDER AND SWITCH

Removal Procedure

1. Disconnect the negative battery cable.
2. Remove the upper and the lower steering column cover panel by removing the screws.
3. Disconnect the electrical connector for the immobilizer detection coil.

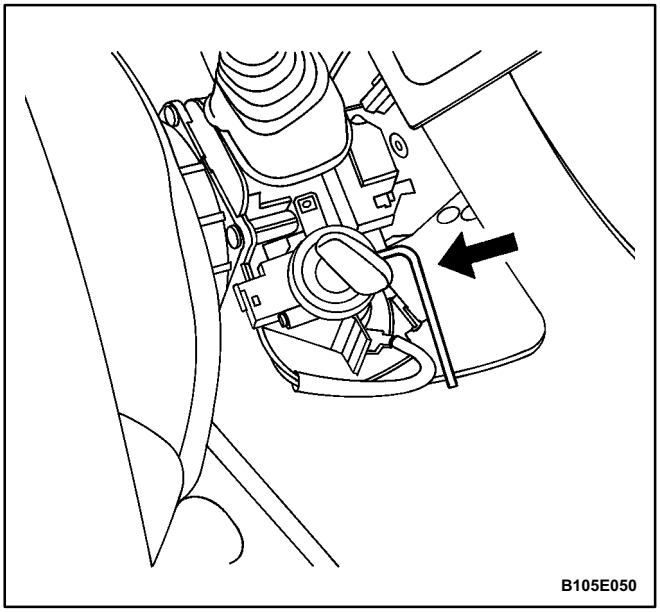

4. With the key in the ignition turned to the position designated ACC, remove the lock cylinder by pressing down the detent spring and pulling the lock cylinder out of the switch cylinder housing.

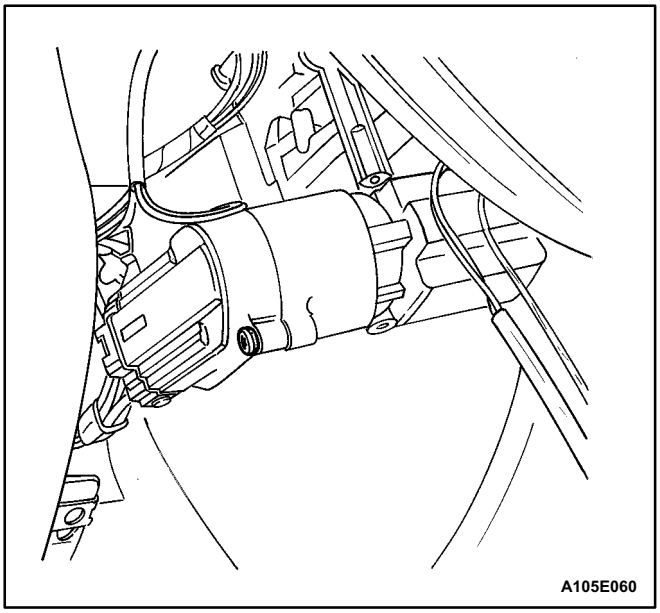

5. Remove the ignition switch retaining screw.
6. Disconnect the wiring and remove the ignition switch.

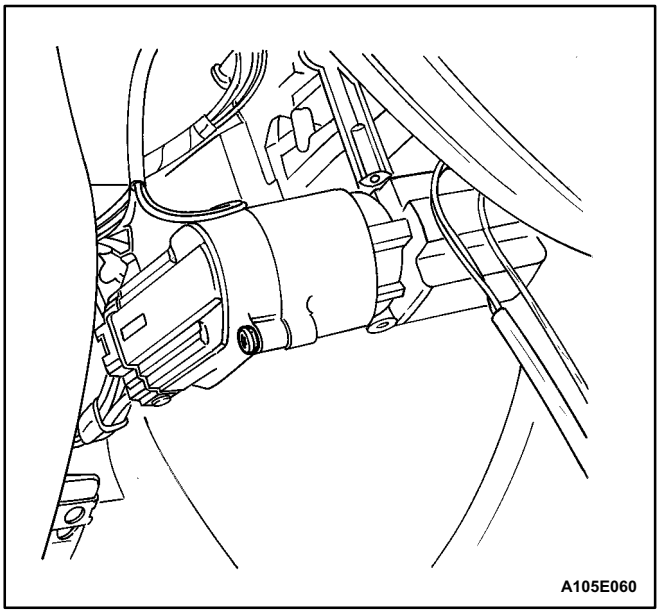

Installation Procedure

1. Install the ignition switch with the ignition switch retaining screw.

   Tighten

   Tighten the ignition switch retaining screw to 2 N•m (18 lb•in).
2. Connect the wiring to the ignition switch.

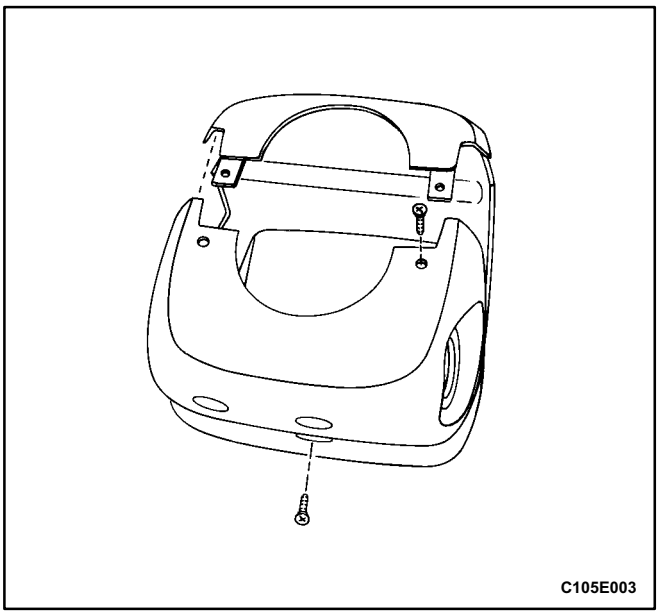

3. Install the lock cylinder.
4. Connect the electrical connector for the immobilizer detection unit.
5. Install the upper and the lower steering column cover panel with the screws.

Tighten

Tighten the upper and the lower steering column cover panel screws to 3 N•m (27 lb•in).

6. Connect the negative battery cable.

STEERING COLUMN

(Left-Hand Drive Shown, Right-Hand Drive Similar)

Important: Remove the steering column only if the following conditions exist:

- The steering column requires replacement.
- The steering and the ignition lock housing require replacement.
- Another operation requires the removal of the steering column.

Notice: The steering column is extremely susceptible to damage after it has been removed from the vehicle. Dropping the column assembly on its end or hammering the end of the steering shaft can collapse the steering shaft or loosen the plastic injections which maintain column rigidity. Leaning on the column can cause it to bend or deform. Any of the above damage can impair the column's collapsible design. If it is necessary to remove the steering wheel, use only the specified steering wheel puller.

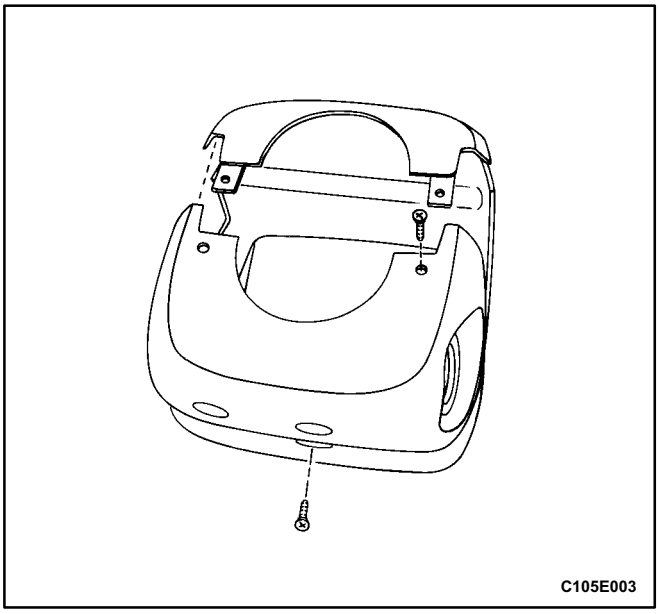

Removal Procedure

1. Disconnect the negative battery cable and let the vehicle sit for 1 minute to deactivate the airbag.
2. Remove the the lower instrument trim panels. Refer to *Section 9E, Instrumentation/Driver Information*.
3. Remove the switch levers. Refer to „Turn Signal Switch and Lever” and „Wiper Switch and Lever” in this section.
4. Remove the upper and the lower steering column cover panel by removing the screws.
5. Remove the immobilizer module. Refer to *Section 9T, Remote Keyless Entry and Antitheft System.*

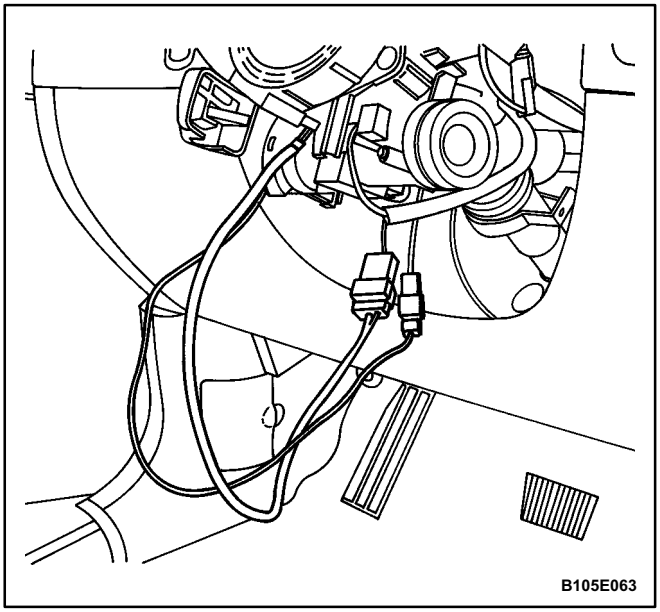

6. Disconnect the airbag electrical connections.

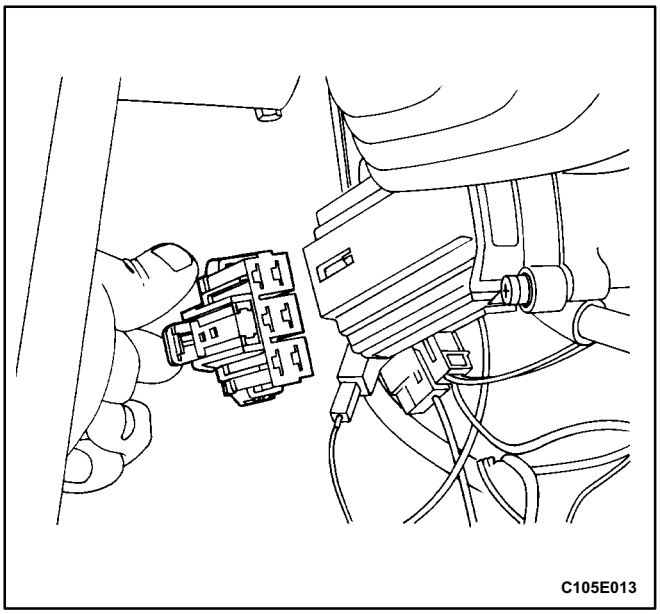

7. Disconnect the ignition switch electrical connection.

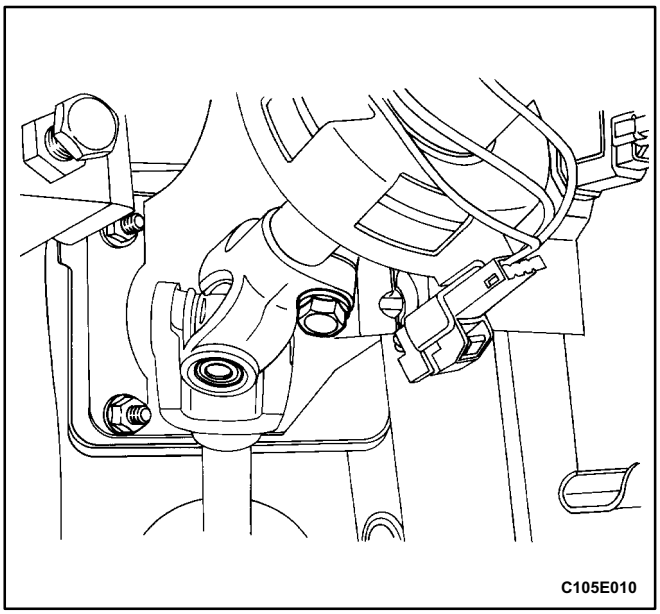

8. Adjust the steering to the straightahead position.
9. Remove the pinch bolt from the intermediate shaft universal joint.

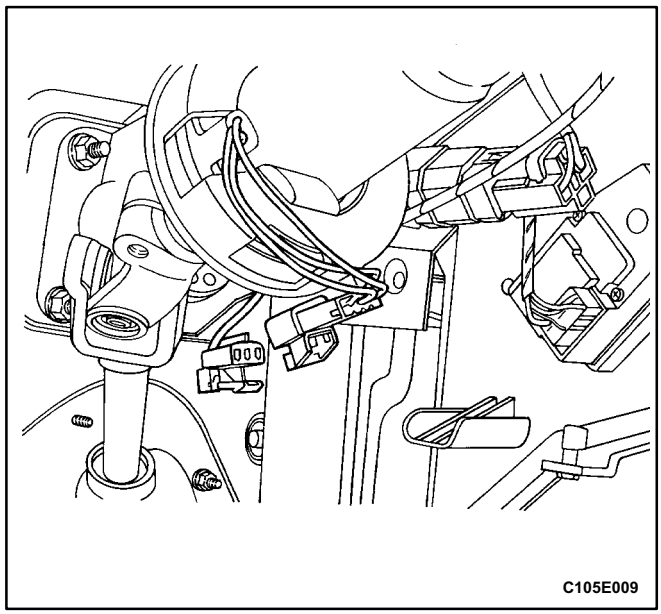

10. Disconnect the speed sensitive steering electrical connector.

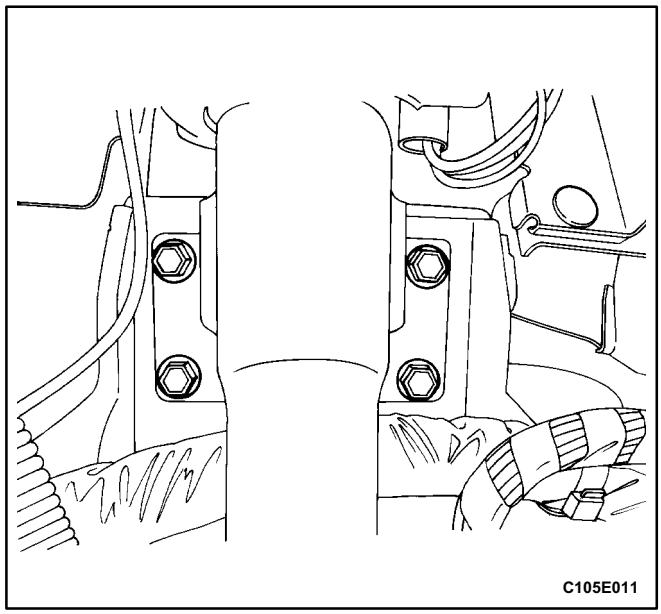

11. Remove the bolts holding the front bracket of the steering column jacket assembly.

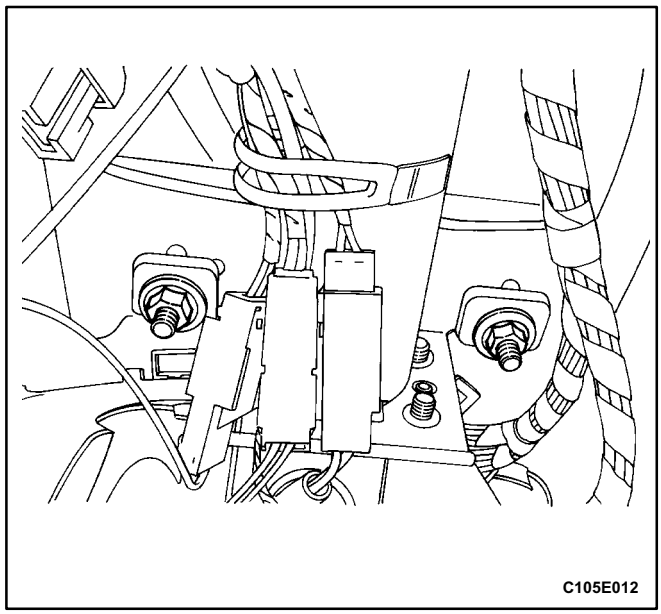

12. Remove the nuts holding the rear bracket of the steering column jacket assembly.
13. Guide the steering column assembly out of steering shaft flange and carefully lay down the assembly.

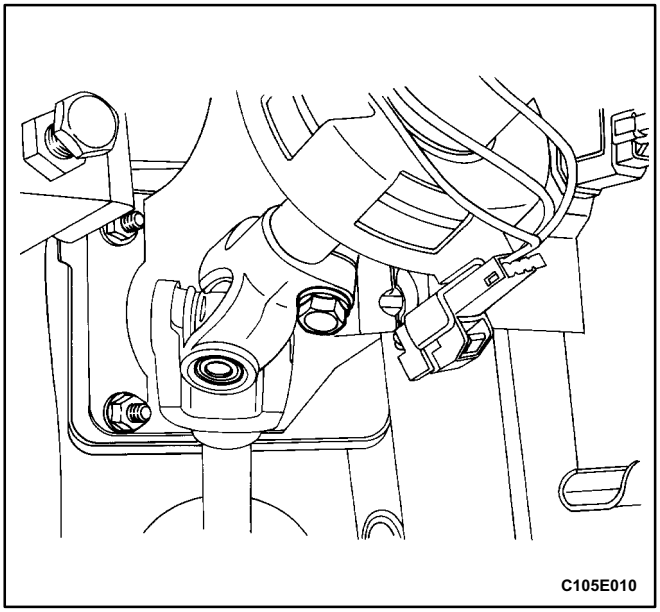

Installation Procedure

Important: For proper installation of the steering column, be sure the steering wheel spokes are centered diagonally and pointed downward and the front wheels are positioned in the straight ahead position.

1. Carefully guide the steering shaft into the intermediate shaft universal joint.

Important: Provide support for the steering column assembly until the mounting nuts are fastened. Do not let the steering column assembly hang unsupported.

2. Install the pinch bolt into the non threaded hole of the flange.

Tighten

Tighten the steering shaft universal joint pinch bolt to 25 N•m (18 lb•ft).

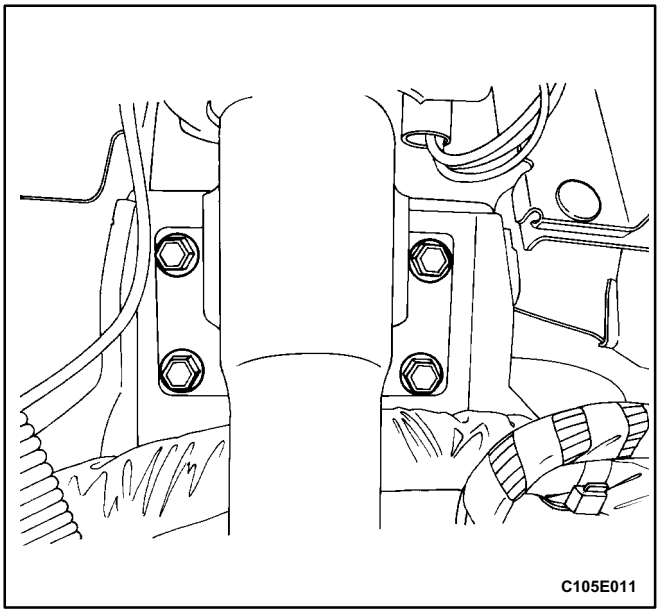

3. Install the bolts for the front bracket of the steering column jacket assembly.

Tighten

Tighten the steering column jacket assembly front bracket bolts to 22 N•m (16 lb•ft).

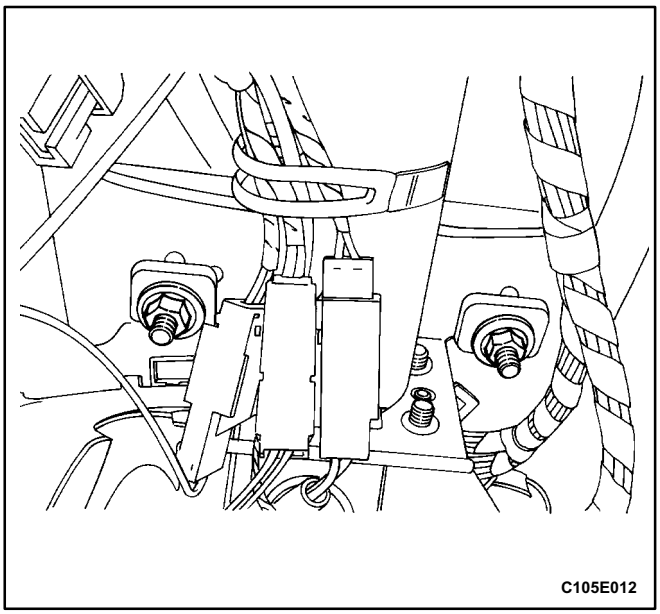

4. Install the nuts for the rear bracket of the steering column jacket assembly.

Tighten

Tighten the steering column jacket assembly rear bracket nuts to 22 N•m (16 lb•ft).

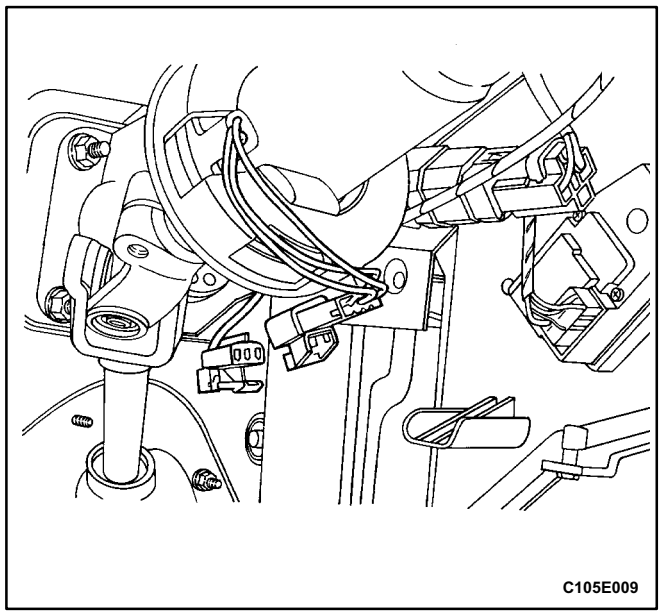

5. Connect the speed sensitive steering electrical connector.

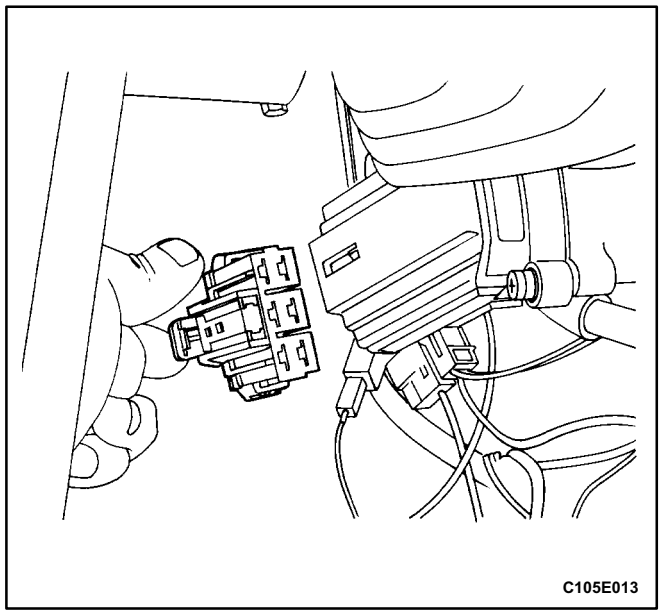

6. Connect the ignition switch electrical connection.

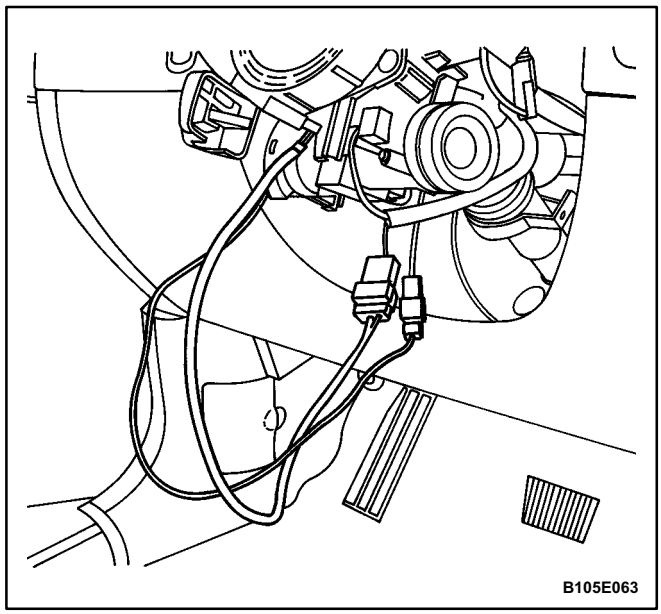

7. Connect the airbag electrical connections.
8. Install the switch levers. Refer to „Turn Signal Switch and Lever" and „Wiper Switch and Lever" in this section.
9. Install the immobilizer module. Refer to *Section 9T, Remote Keyless Entry and Anti-theft System.*
10. Install the lower instrument trim panels. Refer to *Section 9E, Instrumentation/Driver Information*.
11. Install the upper and the lower steering column cover panel with the screws.

Tighten

Tighten the upper and the lower steering column panel screws to 3 N•m (27 lb•in).

12. Inspect the steering wheel in a straightahead position. Refer to Section *6C, Power Steering Gear.*
13. Connect the negative battery cable.

UNIT REPAIR

TILT STEERING COLUMN

Tools Required

J-36667 Lock Plate Adapter (Tilt)

J-23653-A Lock Plate Compressor

J-21854-01 Pivot Pin Remover

Disassembly Procedure

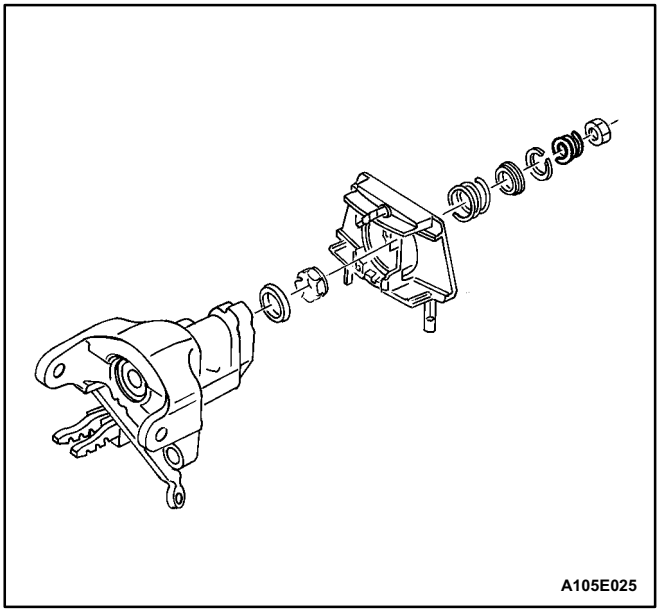

1. Remove the steering column from the vehicle. Refer to „Steering Column” in this section.
2. Remove the steering wheel from the steering column. Refer to „Steering Wheel without SIR” or „Steering Wheel with SIR” in this section.
3. Pull the canceling cam spring from the upper end of the shaft assembly, if it has not been previously removed.

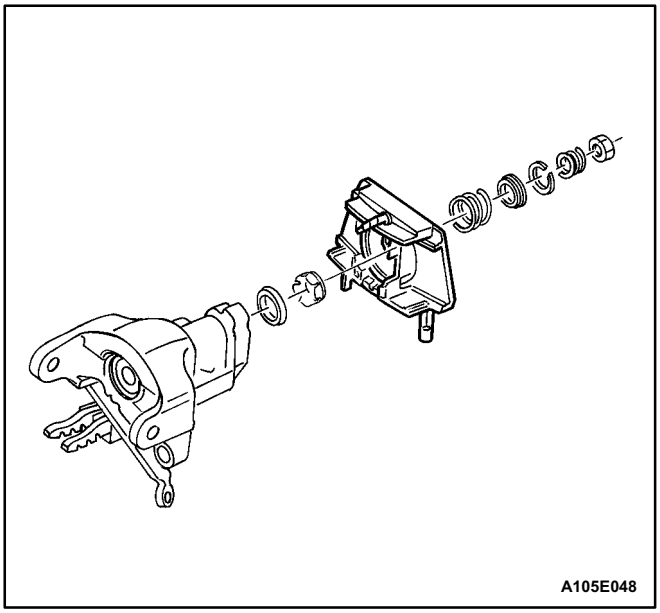

4. Remove the turn signal switch housing screws. Remove the turn signal switch housing from the steering column housing.

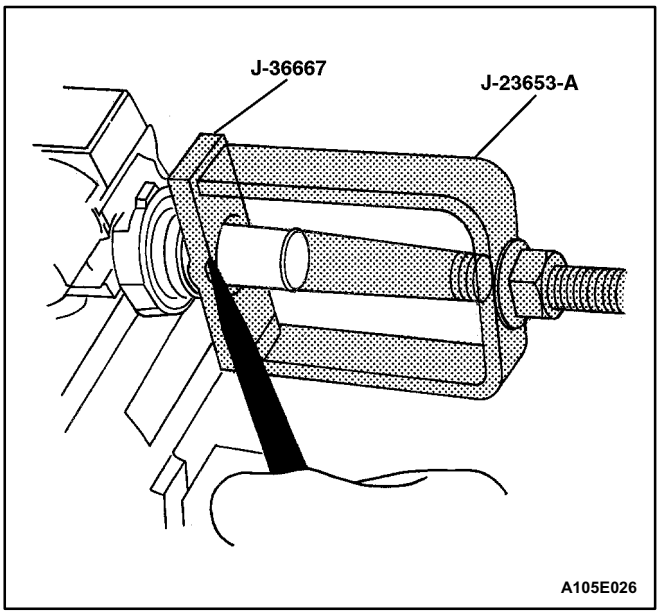

5. Compress the spring retainer and upper bearing spring with the tilt lock plate adapter J-36667 and the lock plate compressor J-23653-A.

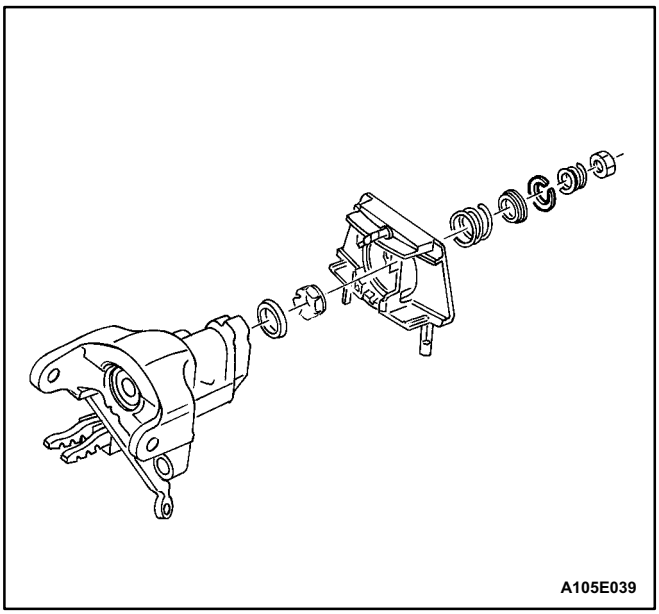

6. Remove the retaining ring.

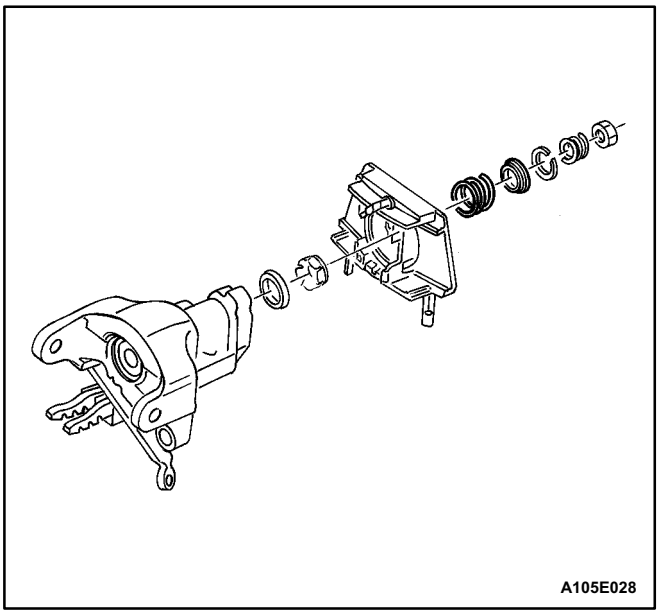

7. Remove the spring retainer and the upper bearing spring.

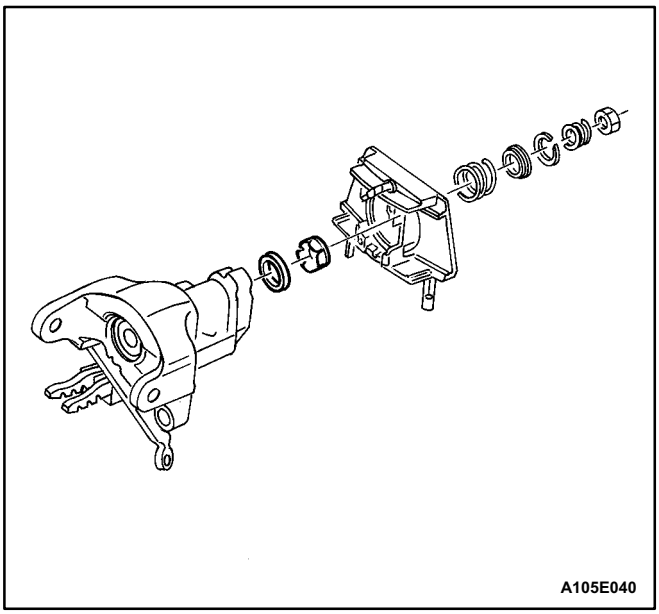

8. Remove the inner race seat and the inner race.

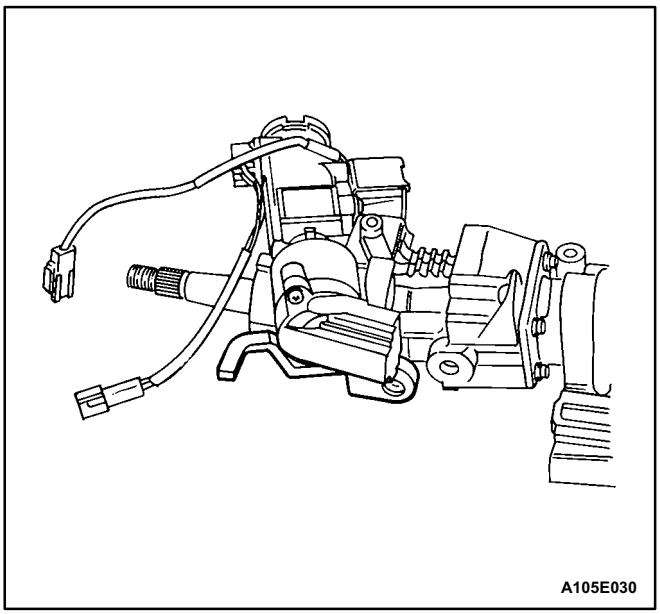

9. Pull the tilt level on the column housing assembly and tilt the column all the way up.

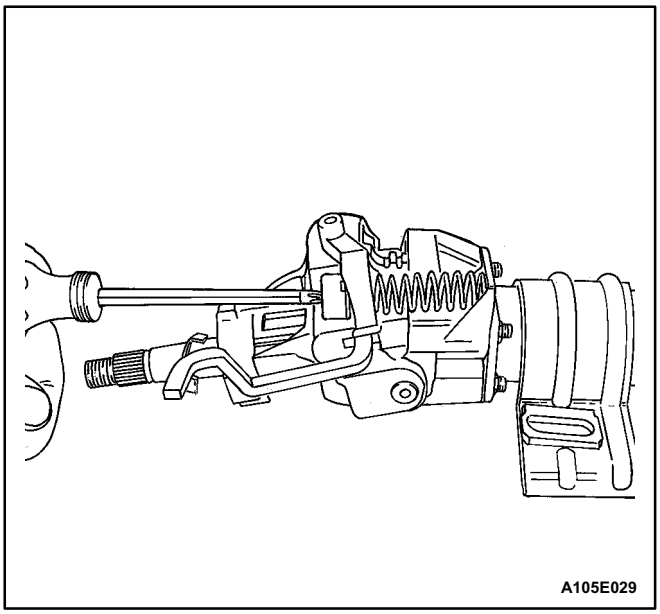

10. Insert a Phillips screwdriver into the square opening at the bottom of the spring retainer. Push and turn left to release the spring retainer and the wheel tilt spring.
11. Remove the spring retainer and the wheel tilt spring.

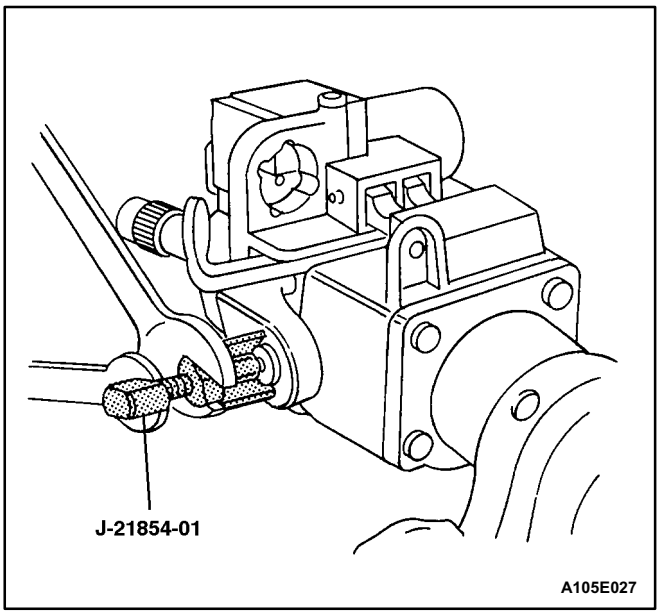

12. Remove the two pivot pins using the pivot pin remover J-21854-01.

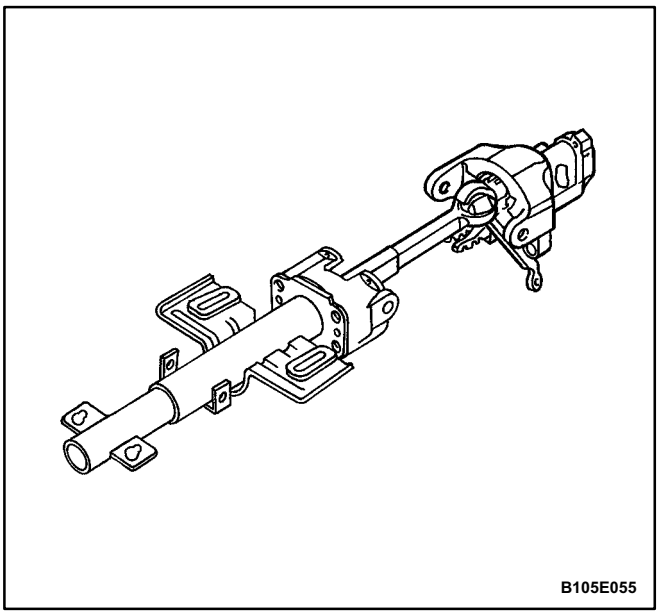

13. Place the lock cylinder in the ACC position.
14. Pull the tilt lever to release the column housing. Remove the column housing and the steering shaft from the housing support.

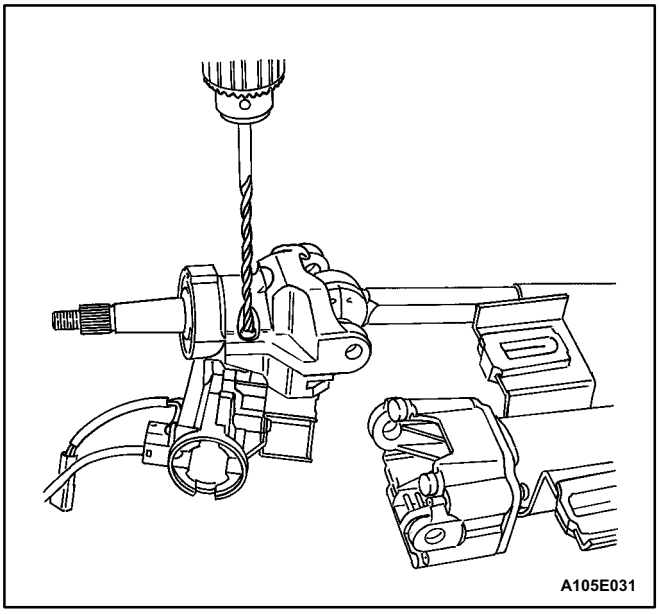

15. Remove the shear bolts, the shear bolt washers, and the ignition switch housing from the steering column housing as follows:
    - 15.1. Use a metal punch to start the drill head.
    - 15.2. Drill off the head of the shear bolts down to the steel shear bolt washers with a 6.5 mm (1/4 inch) drill bit.
    - 15.3. Separate the washers and the ignition switch housing from the column housing.
    - 15.4. Remove the threaded end of the shear bolts from the ignition switch housing with locking pliers.

Important: After drilling and removing the threaded end of the shear bolts, all the metal shavings must be cleaned from all the parts.

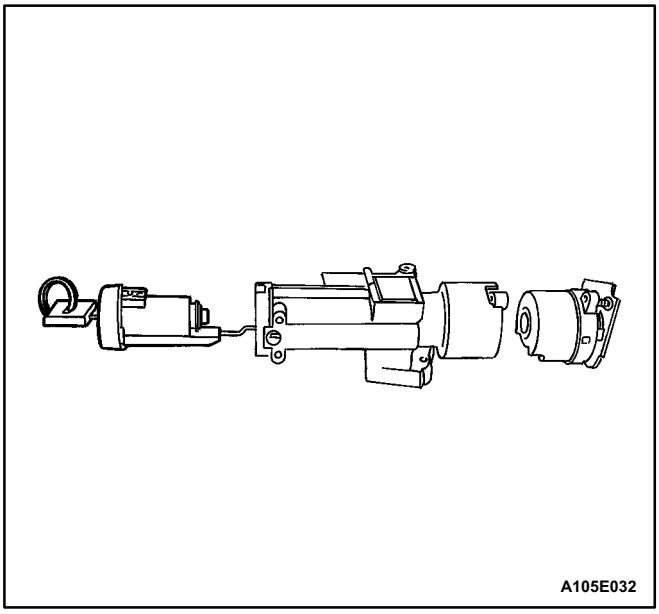

16. Remove the lock cylinder from the ignition switch housing by pushing the lock cylinder release tab.

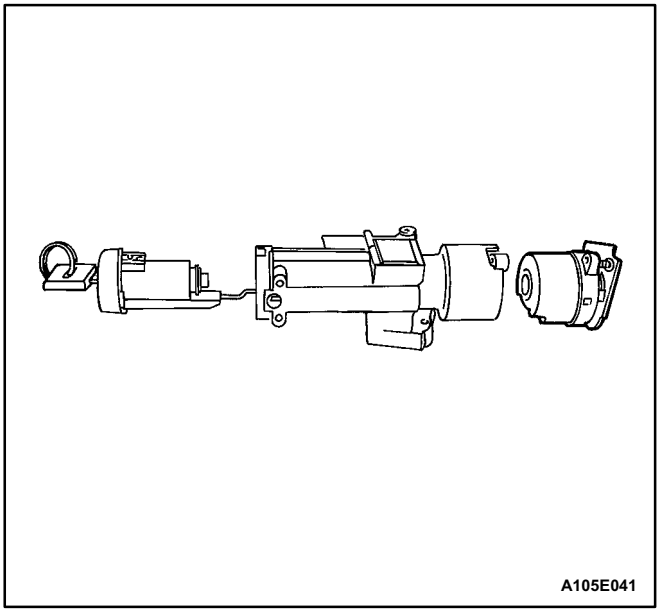

17. Remove the ignition switch retaining screw and remove the ignition switch assembly.

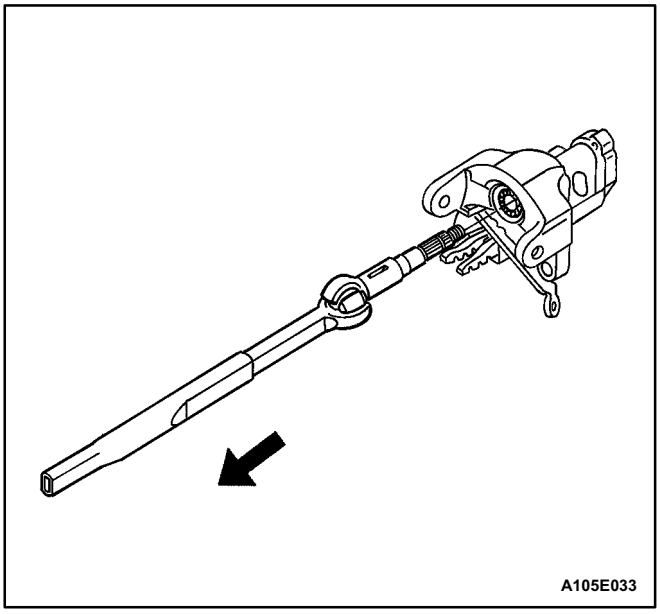

18. Remove the steering shaft assembly from the housing support.

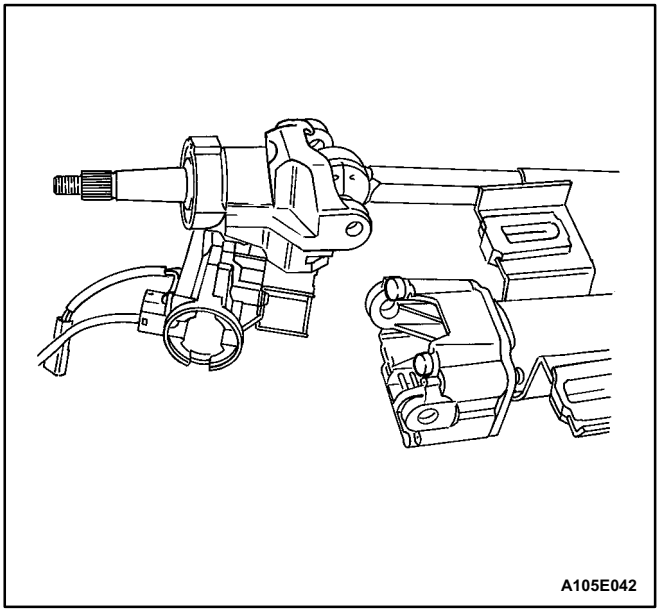

19. Remove the tilt bumpers with a pair of pliers.

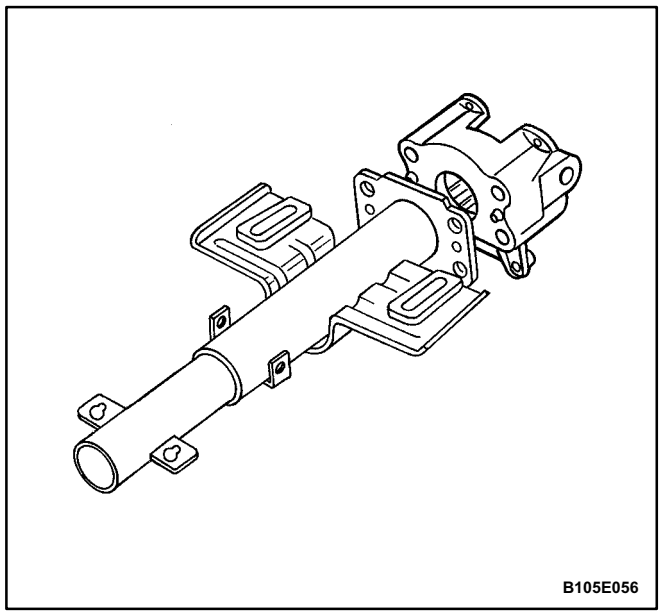

20. Remove the support screws and remove the support housing from the jacket assembly.

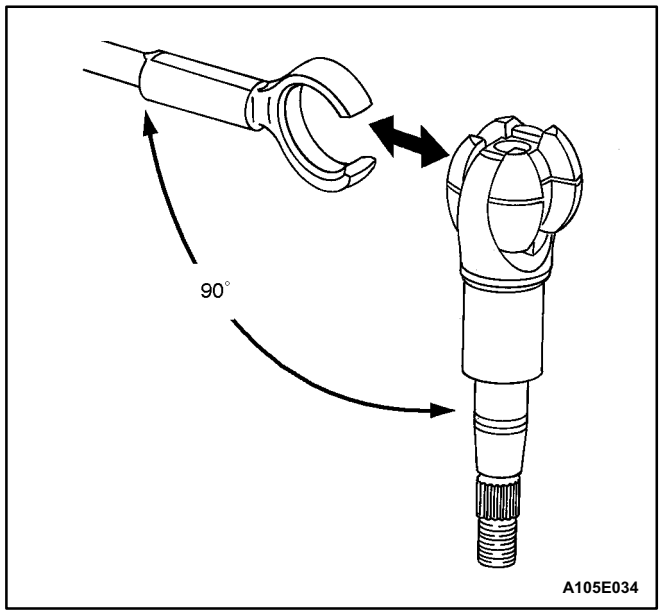

Disassembly Procedure for the Steering Shaft Assembly

Important: Prior to separating the upper shaft from the lower shaft, note the relationship of the upper shaft, with the lock bolt slot at the 12 o'clock position, to the lower shaft pinch bolt groove at the 7 o'clock position. Refer to this orientation for proper assembly.

1. Position the upper shaft 90 degrees to the lower shaft and separate the two parts.

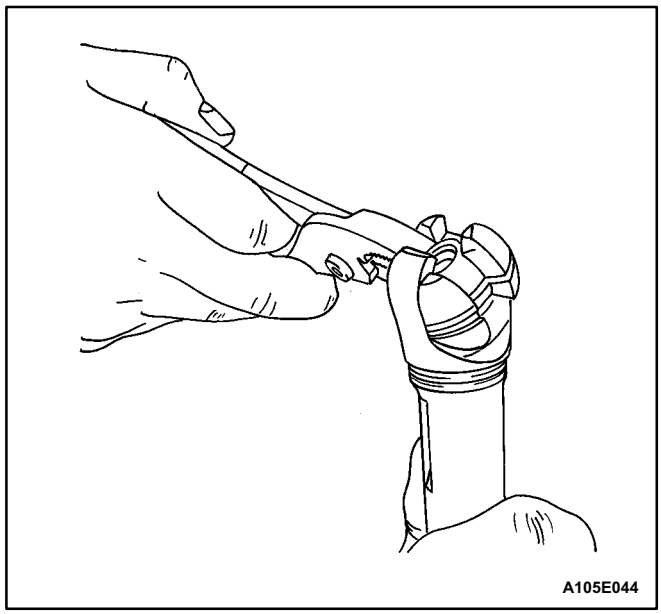

2. Rotate the centering sphere 90 degrees and remove it from the upper shaft.

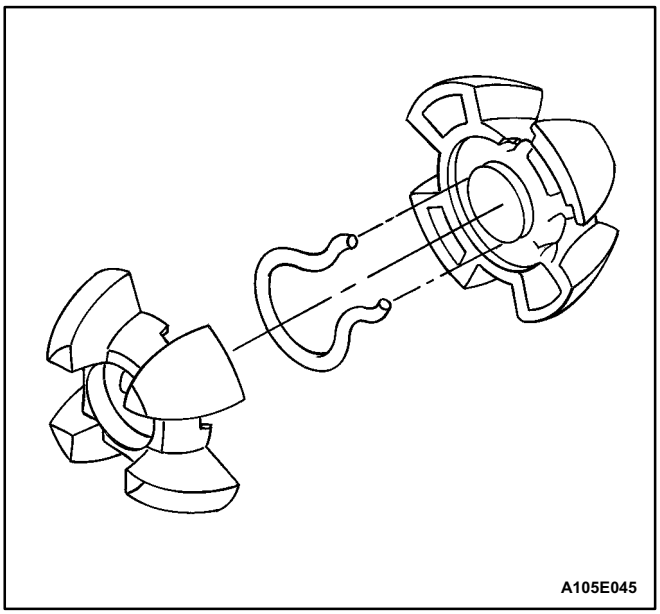

3. Separate the sphere halves and remove the joint preload spring.

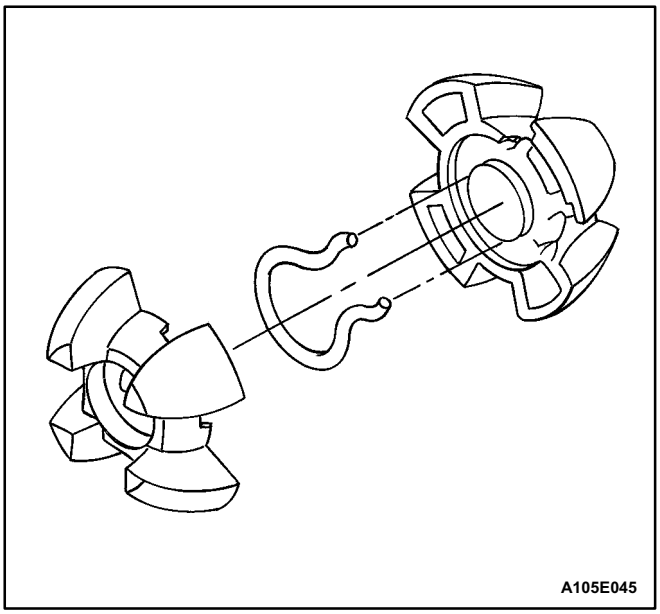

Assembly Procedure for the Steering Shaft Assembly

1. Lubricate the centering sphere halves and the joint preload spring with lithium grease.
2. Place the joint preload spring between the sphere halves with the ends of the spring in the notches.

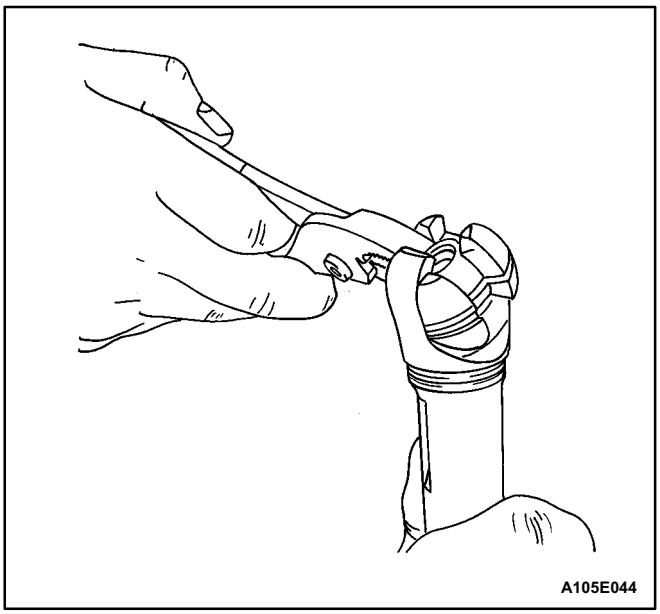

3. Lubricate the sphere end of the upper shaft with lithium grease.
4. Place the sphere into the upper shaft and rotate the sphere 90 degrees.

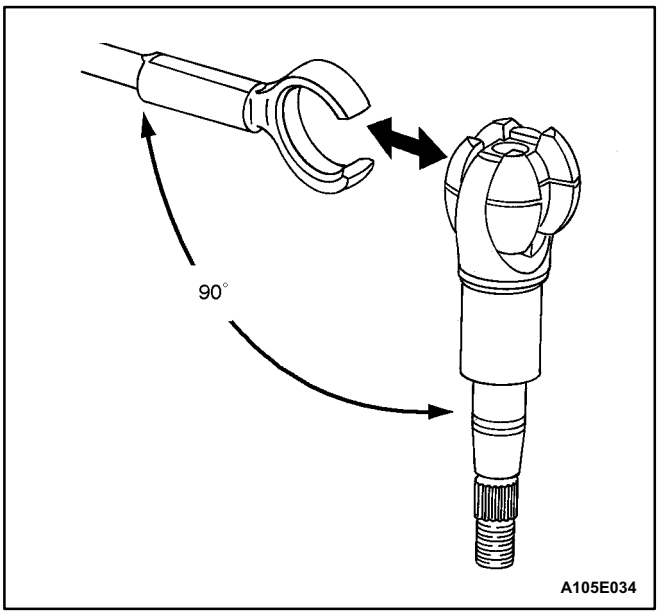

5. Lubricate the sphere end of the lower shaft with lithium grease.

Important: To insure proper operation, the upper shaft and the lower shaft must be aligned correctly when they are connected.

6. Place the lock bolt slot on the upper shaft at the 12 o'clock position.
7. Place the pinch bolt groove near the end of the lower shaft at the 7 o'clock position.
8. Connect the upper shaft to the lower shaft.

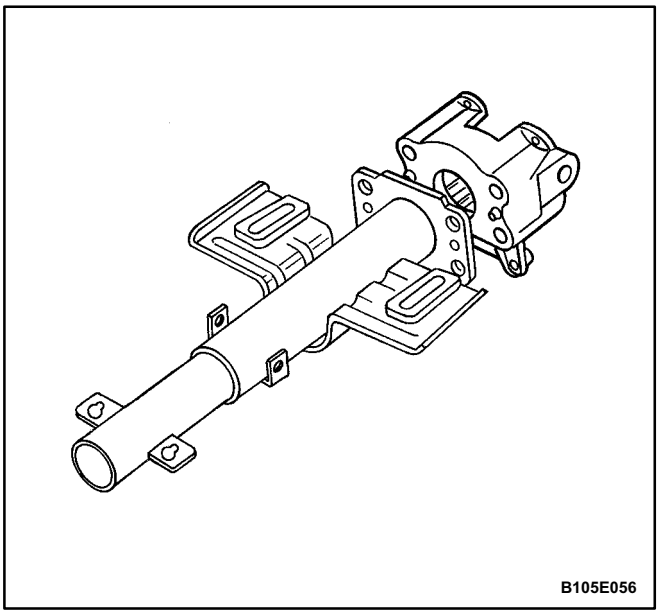

Assembly Procedure

Important: All fasteners in the following steps must be seated firmly before being tightened to specifications.

1. Connect the support housing to the jacket assembly with the support screws.

   ### Tighten

   Tighten the support housing screws to 16 N•m (12 lb•ft).

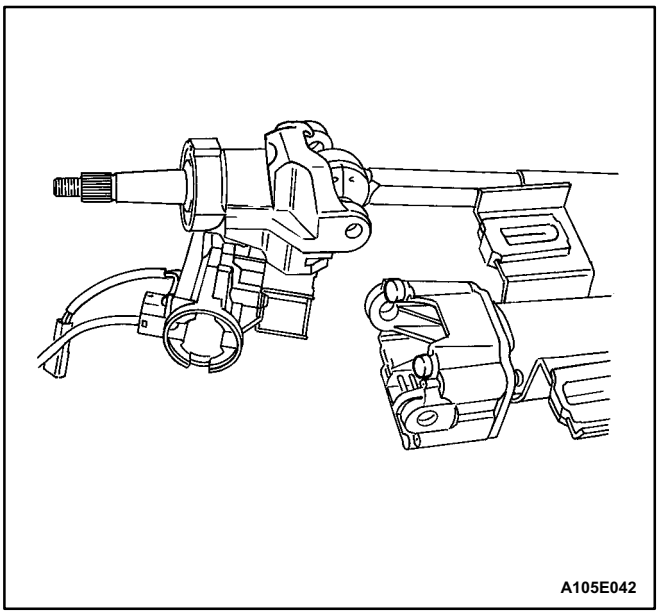

2. Connect the tilt bumpers to the support housing and snap them in place.

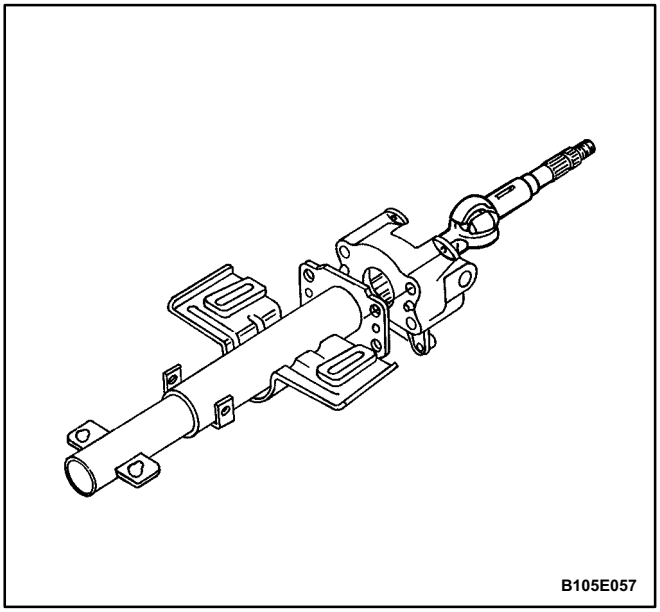

3. Slide the steering shaft assembly into the support housing.

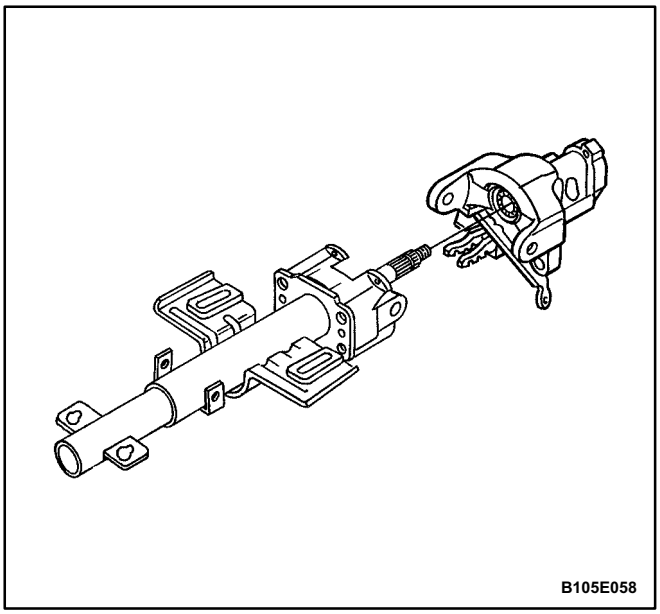

4. Lubricate both bearings in the column housing with lithium grease. Slide the column housing onto the shaft assembly and the housing support.

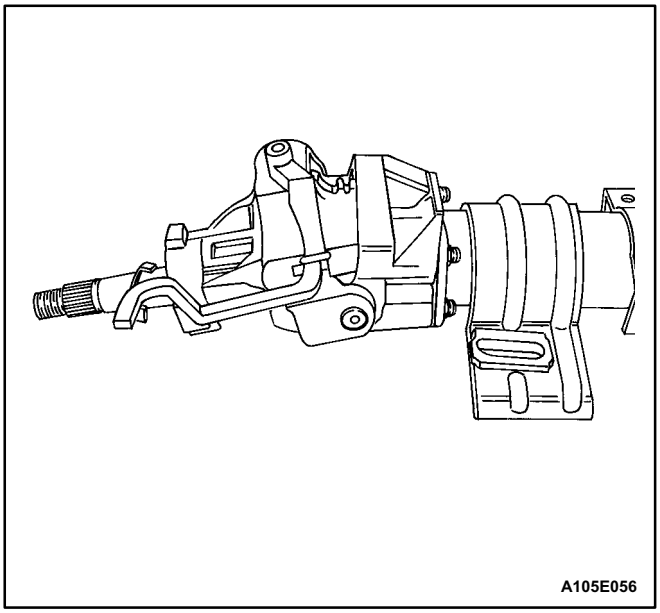

5. Lubricate the pivot pins with lithium grease and slide the pins into the housing until the pins are bottomed. Tap the pivot pins in place.

Important: The pivot pins must be staked to the column housing after installation. Stake each pin at three equally spaced locations.

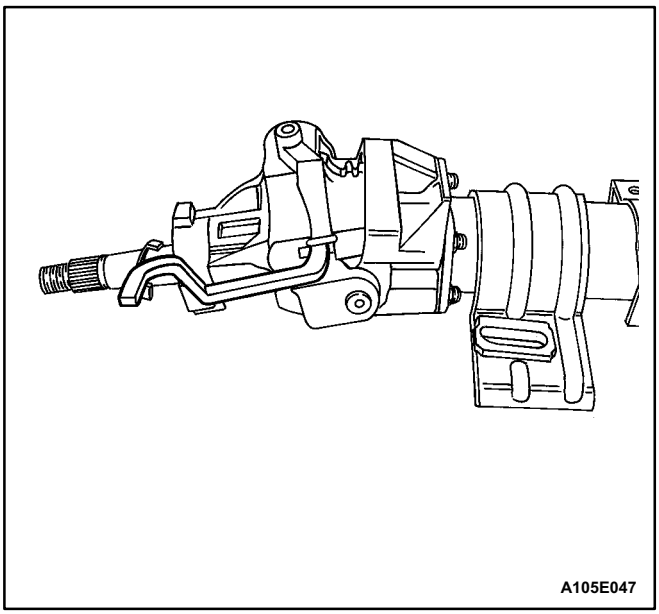

6. Pull the tilt lever on the column housing and tilt the column all the way up.

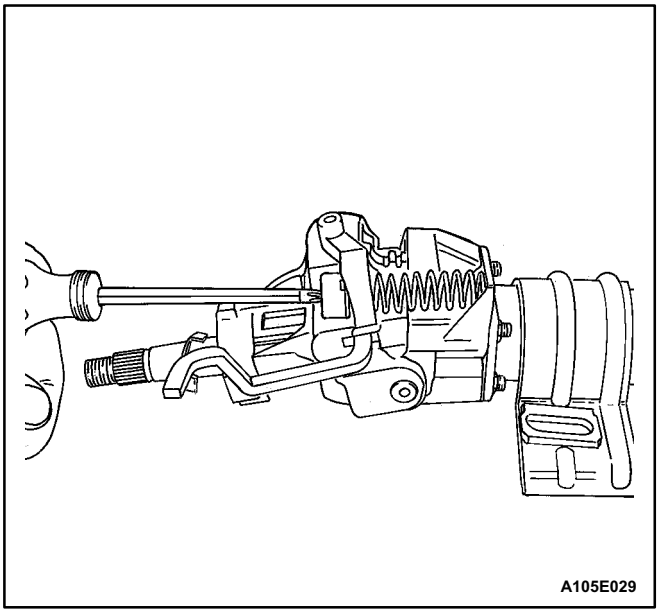

7. Lubricate the tilt spring with lithium grease.
8. Install the tilt spring and the spring retainer. Be sure the spring engages the locating tab on the support housing. Insert a Phillips screwdriver into the square opening in the spring retainer, push down, and turn right to lock it in place.

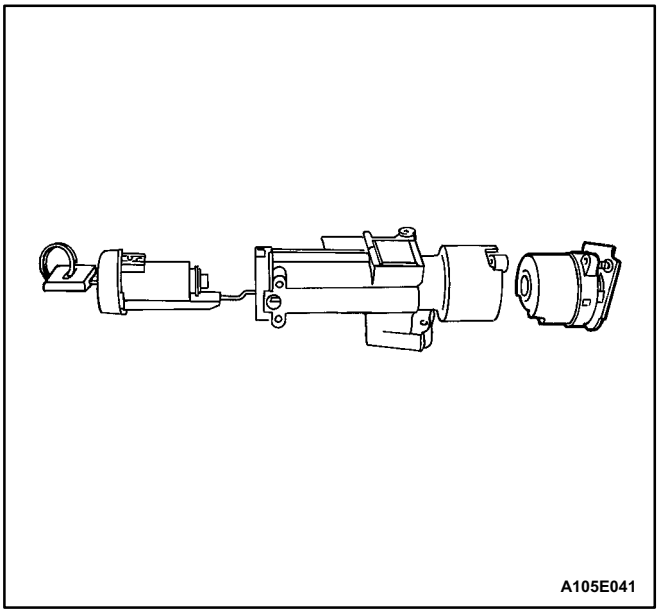

9. Install the ignition switch with the ignition switch retaining screw.

Tighten

Tighten the ignition switch retaining screw to 2 N•m (18 lb•in).

10. Connect the wiring. Refer to „Ignition Lock Cylinder and Switch” in this section.

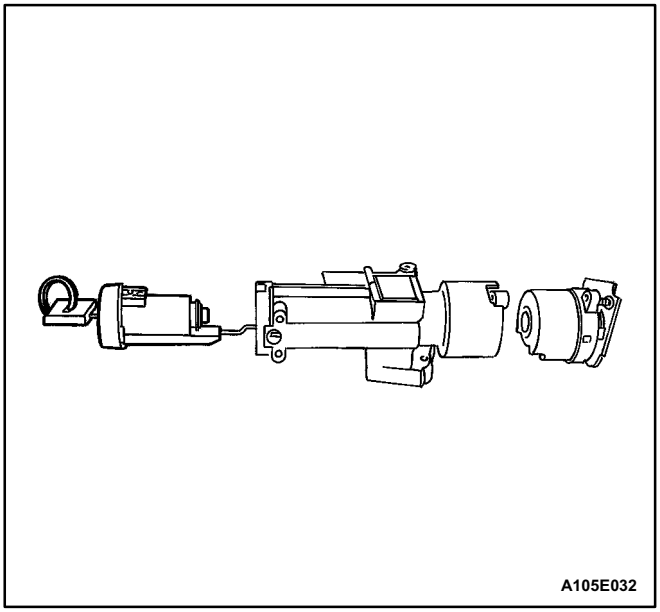

Important: To ensure that the tab on the lock cylinder shaft and the slotted opening on the ignition switch are in alignment, the lock cylinder must be in the ACC position prior to installation.

11. Install the lock cylinder into the ignition switch housing.

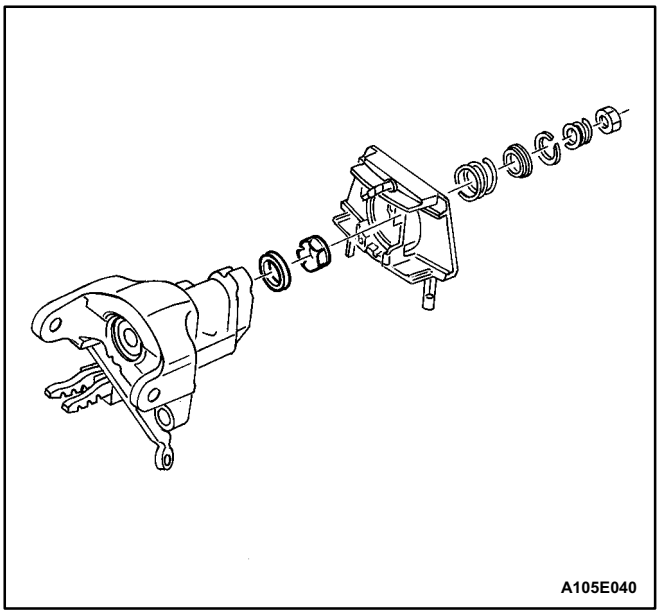

12. Attach the ignition switch housing to the column housing with the shear bolt washers and the shear bolts.

Tighten

Tighten the ignition switch housing shear bolts until the bolt heads separate from the body, approximately 11 N•m (97 lb•in).

13. Place the lock cylinder in the LOCK position and remove the key.
14. Rotate the steering shaft assembly until the lock bolt engages and locks the steering shaft in position.
15. Install the inner race and the inner race seat.

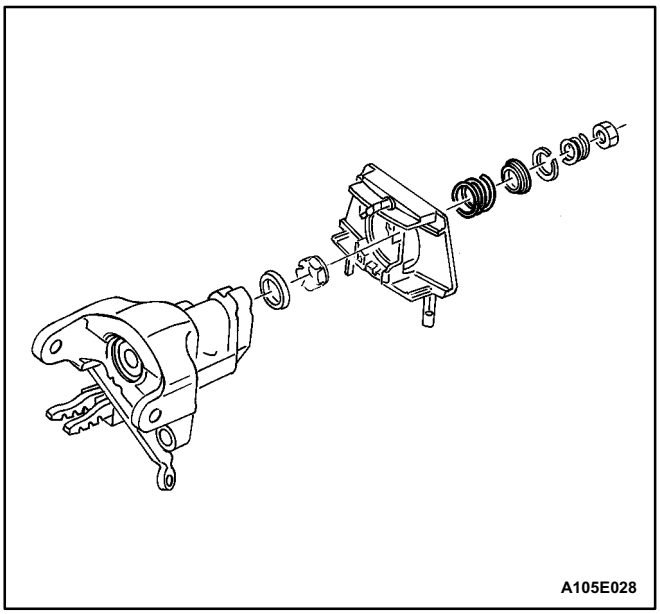

16. Install the upper bearing spring and the spring retainer.

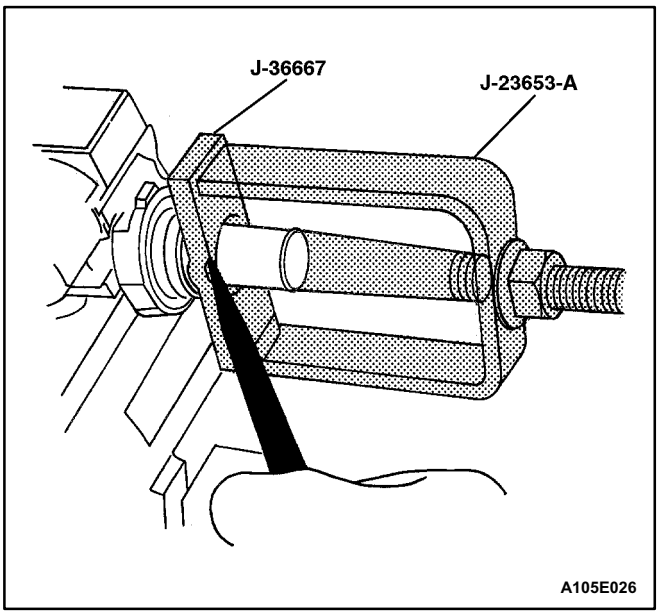

17. Compress the upper bearing spring and the spring retainer with the tilt lock plate adapter J-36667 and the lock plate compressor J-23653-A.

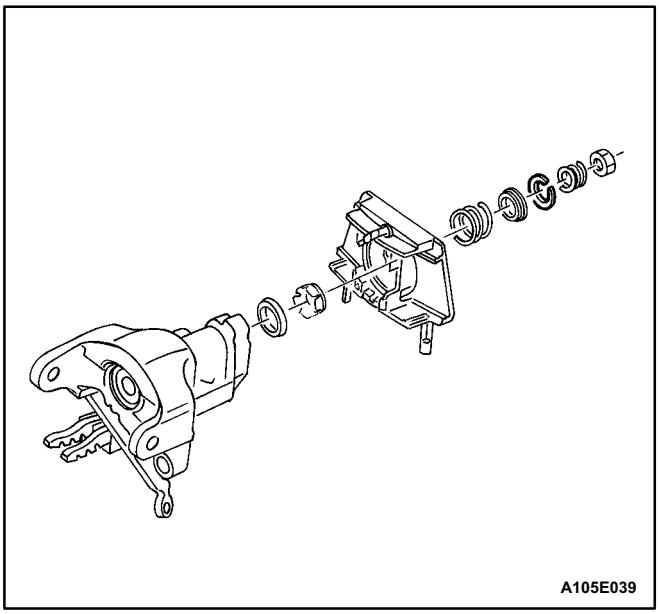

18. Place the retaining ring into the groove on the upper shaft.

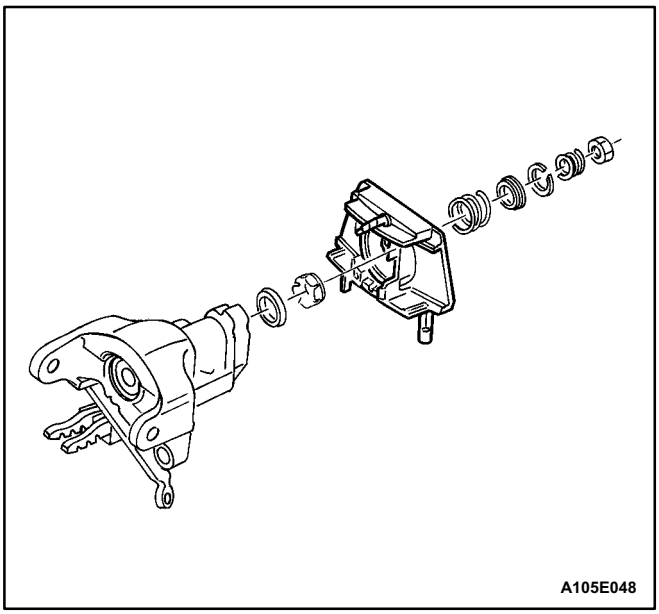

19. Connect the turn signal switch housing to the steering column housing with the turn signal switch housing screws.

Tighten

Tighten the turn signal switch housing screws to 3 N•m (27 lb•in).

20. Install the steering column into the vehicle. Refer to „Steering Column” in this section.
21. Install the cancelling cam spring and the steering wheel onto the steering column. Refer to „Steering Wheel without SIR” or „Steering Wheel with SIR” in this section.

GENERAL DESCRIPTION AND SYSTEM OPERATION

STEERING WHEEL AND COLUMN

Caution: To ensure the energy absorbing action of the steering column, it is important to use only the specified screws, bolts, and nuts, tightened to the specified torque.

In addition to the steering function, the steering column provides safety and security.

The energy absorbing column is designed to compress in a front end collision to lessen the chance of driver injury.

The ignition switch and the lock are mounted on the column, allowing the ignition and steering operations to be locked to inhibit theft of the car.

The column levers trigger the turn signals, the headlight beams, and the windshield washer and wipers.

A tilt steering column uses a spherical joint to allow the steering wheel to tilt up and down. This enables the driver to adjust the steering wheel to a comfortable position.

Notice: Apply a thin coat of lithium grease to all friction points when reassembling.

The column may be disassembled and reassembled easily.

IGNITION SWITCH KEYHOLE LAMP

For description and lamp replacement information, refer to *Section 9B, Lighting Systems.*

IGNITION KEY REMINDER

The ignition key reminder alerts the driver that the key is still in the ignition when the driver attempts to exit the vehicle.

An internal switch in the ignition lock cylinder supplies battery voltage to the reminder chime module when all of the following conditions are true:

- The key is in the ignition switch.
- The ignition is OFF.
- The driver's door is open.

For information on removal and installation of the reminder chime module, refer to *Section 9E, Instrumentation/Driver Information*.

HVAC (HEATING, VENTILATION, AND AIR CONDITIONING)

CONTENTS

SECTION 7A	HEATING AND VENTILATION SYSTEM
SECTION 7B	MANUAL CONTROL HEATING, VENTILATION, AND AIR CONDITIONING SYSTEM
SECTION 7D	AUTOMATIC TEMPERATURE CONTROL HEATING, VENTILATION, AND AIR CONDITIONING SYSTEM

SECTION 7A

HEATING AND VENTILATION SYSTEM

CAUTION: Disconnect the negative battery cable before removing or installing any electrical unit or when a tool or equipment could easily come in contact with exposed electrical terminals. Disconnecting this cable will help prevent personal injury and damage to the vehicle. The ignition must also be in LOCK unless otherwise noted.

TABLE OF CONTENTS

Specifications 7A-1
Heater Temperature Specifications 7A-1
Fastener Tightening Specifications 7A-2
Schematic and Routing Diagrams 7A-3
Non A/C Diagram 7A-3
Airflow - Typical 7A-4
Airflow With Rear Heating Duct 7A-5
Diagnosis 7A-6
Heater System 7A-6
Insufficient Heating or Defrosting 7A-6
Blower Electrical (Manual and Non A/C) 7A-9
Improper Air Delivery or No Mode Shift (Manual and Non A/C) 7A-11
Too Much Heat 7A-13
Controls 7A-15
Blower Noise 7A-16
Maintenance and Repair 7A-18
On-Vehicle Service 7A-18
Temperature Cable Adjustment 7A-18
Temperature Control Cable 7A-18
Control Assembly 7A-20
Control Assembly Knob Lighting 7A-21
Heater/Air Distributor Case Assembly 7A-22
Blower Motor 7A-25
HighBlower Relay 7A-26
Blower Resistor 7A-27
Heater Hoses 7A-28
Heater Core 7A-29
Rear Heating Duct 7A-30
Control Vacuum Tank 7A-33
General Description and System Operation 7A-35
Heating and Ventilation Systems 7A-35

SPECIFICATIONS

HEATER TEMPERATURE SPECIFICATIONS

Ambient Air Temperature	Heater Outlet Air Temperature
– 18°C (0°F)	54°C (129°F)
– 4°C (25°F)	59°C (138°F)
10°C (50°F)	64°C (147°F)
24°C (75°F)	68°C (154°F)

FASTENER TIGHTENING SPECIFICATIONS

Application	N•m	Lb•Ft	Lb•In
Blower Motor to Heater/Air Distributor Case Screws	6	-	53
Blower Motor Resistor Screws	6	-	53
Controller Retaining Screws	4	-	35
Heater/Air Distributor Case Assembly Screws	8	-	71
Heater Core Cover Screws	3	-	26.5
Heater Core Retaining Bracket Screw	3	-	26.5
Vacuum Tank Mounting Nuts	4	-	35

SCHEMATIC AND ROUTING DIAGRAMS

NONA/C DIAGRAM

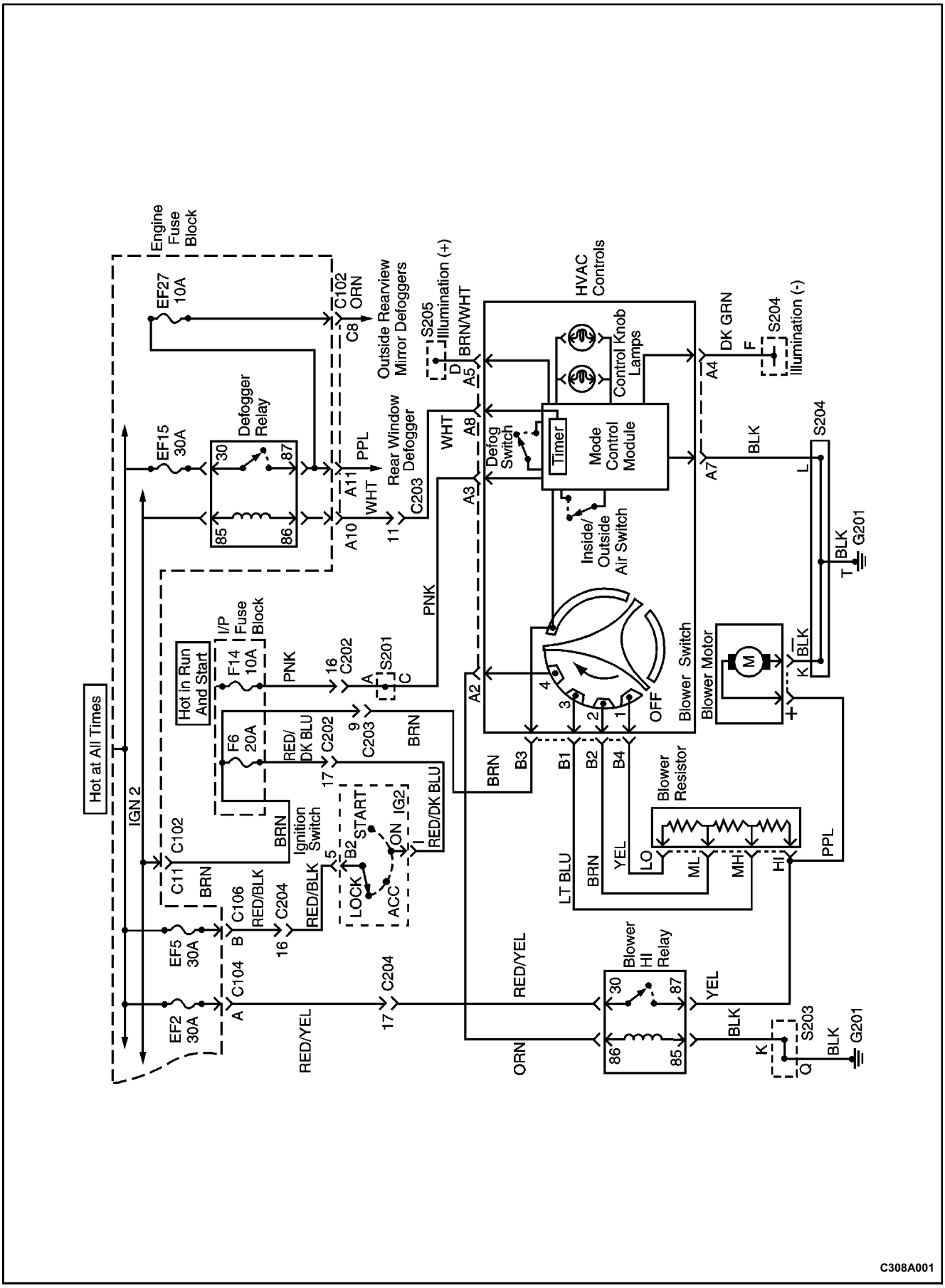

C308A001

AIRFLOW - TYPICAL

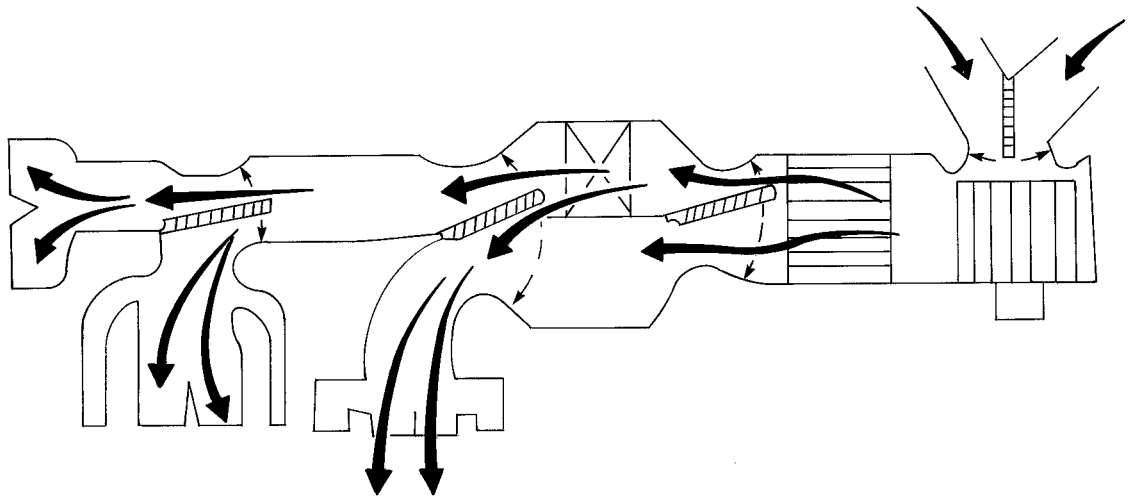

B108B039

AIRFLOW WITH REAR HEATING DUCT

(Left-Hand Drive Shown, Right-Hand Drive Similar)

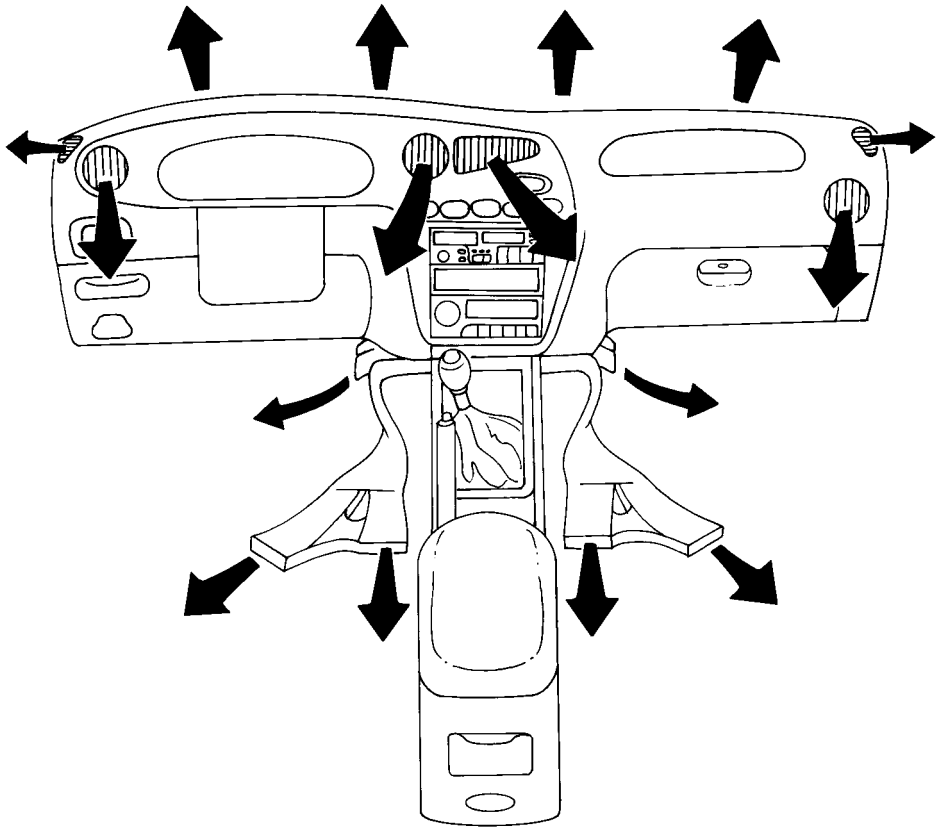

C308A033

DIAGNOSIS

HEATER SYSTEM

INSUFFICIENT HEATING OR DEFROSTING

Caution: The cooling system is pressurized when hot. Injury can result from removing the surge tank cap before the engine is sufficiently cool.

Step	Action	Value(s)	Yes	No
1	Verify the customer's complaint. Are the customer's concerns verified?	-	Go to *Step 2*	System OK
2	Check the coolant level. Is the coolant level correct?	-	Go to *Step 4*	Go to *Step 3*
3	Add coolant as needed. Is the repair complete?	-	System OK	Go to *Step 4*
4	Check the drive belts for tension or damage. Are the drive belts OK?	-	Go to *Step 6*	Go to *Step 5*
5	Correct any problem with the drive belts. Is the repair complete?	-	System OK	Go to *Step 6*
6	Check the coolant hoses for leaks or kinks. Are the coolant hoses OK?	-	Go to *Step 8*	Go to *Step 7*
7	Repair any problem with the coolant hoses. Is the repair complete?	-	System OK	Go to *Step 8*
8	Check the surge tank cap. Refer to *Section 2D, Engine Cooling.* Is the surge tank cap OK?	-	Go to *Step 10*	Go to *Step 9*
9	Repair or replace the surge tank cap as needed. Is the repair complete?	-	System OK	Go to *Step 10*
10	1. Turn the A/C switch OFF on vehicles equipped with air conditioning (A/C). 2. Set the blower motor switch on maximum speed. 3. Set the heater control to full hot. 4. Turn the ignition ON. 5. Check for airflow from the vent outlet. Is there heavy airflow from the vent outlet?	-	Go to *Step 11*	Go to *Step 26*
11	Check for a change in the airflow at various blower speeds. Does the blower speed increase as the switch is turned from minimum to maximum?	-	Go to *Step 12*	Go to „Blower Electrical (Manual and Non A/C)"
12	1. Turn the A/C switch OFF. 2. Set the temperature lever to full hot. 3. Set the blower motor switch on maximum speed. 4. With the engine sufficiently cool, remove the surge tank cap. 5. Start the vehicle and idle the engine. 6. Watch for the flow of the coolant. Is the coolant flow visible?	-	Go to *Step 14*	Go to *Step 13*

Insufficient Heating or Defrosting (Cont'd)

Step	Action	Value(s)	Yes	No
13	1. Check the system for the following problems: ● Restriction in the cooling system. ● Failed water pump impeller. ● Faulty thermostat. 2. Make repairs to the cooling system, as needed. Are the repairs complete?	-	System OK	Go to *Step 14*
14	1. Install the surge tank cap. 2. With the ignition ON, allow the engine to warm up for about 20 minutes. Drive the vehicle at 48 km/h (30 mph). 3. Use a thermometer to measure the ambient air temperature and the discharge air temperature at the heater outlet. Does the heater output meet the minimum values given?	Refer to „Heater Temperature Specifications”	Go to *Step 15*	Go to *Step 16*
15	1. Check the vehicle for cold air leaks at the following locations: ● Dash. ● Heater cases. ● Vents. 2. Check under the seat for obstructions. 3. Repair any leaks or obstructions. Are the repairs complete?	-	System OK	-
16	1. Turn the ignition OFF. 2. Turn the temperature control knob to full cold, then rapidly to full hot. 3. Listen for the sound of the temperature door slam just before reaching the end of the travel range of the control knob. Does the door slam?	-	Go to *Step 18*	Go to *Step 17*
17	1. Check the following aspects of the temperature door: ● Travel. ● Cables. ● Linkage. 2. Verify the accuracy of the temperature controls at full hot. 3. Verify the accuracy of the temperature controls at full cold. Is the repair complete?	-	System OK	-
18	1. Set the temperature control knob to full hot. 2. Start the vehicle. 3. Check the temperature of the heater inlet hose and the heater outlet hose by feel. The air temperature around the hoses should be at least 29°C (84°F). Is the heater inlet hose hot and the heater outlet hose warm?	-	Go to *Step 19*	Go to *Step 22*
19	Check the thermostat. Refer to *Section 2D, Engine Cooling.* Is the thermostat installed and seated properly?	-	Go to *Step 20*	Go to *Step 21*

Insufficient Heating or Defrosting (Cont'd)

Step	Action	Value(s)	Yes	No
20	Replace the thermostat. Refer to *Section 2D, Engine Cooling.* Is the repair complete?	-	System OK	-
21	Reinstall the thermostat. Is the repair complete?	-	System OK	-
22	Inspect the heater hoses for proper installation. Are the heater hoses reversed?	-	Go to *Step 23*	Go to *Step 24*
23	Reinstall the heater hoses properly. Is the repair complete?	-	System OK	-
24	1. Back flush the heater core. 2. Drain the cooling system. 3. Replace the coolant. 4. Warm the engine to an average operating temperature. 5. Feel the heater inlet hose and the heater outlet hose. Is the heater inlet hose hot and the heater outlet hose warm?	-	System OK	Go to *Step 25*
25	Replace the heater core. Is the repair complete?	-	System OK	-
26	Recheck the system using the „Control Settings/Correct Results" tests. Refer to „Improper Air Delivery or No Mode Shift" in this section. Is the repair complete?	-	System OK	Go to *Step 27*
27	Check for airflow from the defroster or the vent outlets. Is there high airflow from the defroster or the vent outlets?	-	Go to *Step 28*	Go to *Step 29*
28	1. Check the heater door at the floor and the vent door to get the proper airflow and to verify proper operation. 2. Repair as required. Is the repair complete?	-	System OK	-
29	Switch the mode knob to defrost. Is the defroster airflow OK?	-	Go to *Step 30*	Go to *Step 31*
30	1. Remove the heater outlet and check for obstructions. 2. Remove any obstructions in the heater outlet. Is the repair complete?	-	System OK	-
31	Check for an airflow change at various blower speeds. Does the blower speed increase as the control is turned from minimum to maximum?	-	Go to *Step 32*	Go to „Blower Electrical (Manual and Non A/C)"
32	Check for obstructions in the system at the blower inlet and at the air filter, if the vehicle is equipped with one. Are there any obstructions?	-	Go to *Step 33*	Go to *Step 34*
33	Remove the obstructions in the system at the blower inlet or replace a clogged filter. Is the repair complete?	-	System OK	-

Insufficient Heating or Defrosting (Cont'd)

Step	Action	Value(s)	Yes	No
34	1. Set the blower on maximum speed. 2. Rotate the temperature control from full hot to full cold. 3. Listen for an airflow change. Does the airflow change?	-	Go to *Step 35*	Go to *Step 36*
35	1. Check the following aspects of the temperature door: ● Travel. ● Cables. ● Linkage. ● Control. 2. Verify the accuracy of the temperature control at full hot. Is the repair complete?	-	Go to *Step 1*	-
36	1. Check the system for any obstruction between the blower and the system outlets. 2. Remove any obstruction. Is the repair complete?	-	Go to *Step 1*	-

BLOWER ELECTRICAL (MANUAL AND NON A/C)

Step	Action	Value(s)	Yes	No
1	Verify the customer's complaint. Are the customer's concerns verified?	-	Go to *Step 2*	System OK
2	Turn the blower ON. Does the blower run at any speed?	-	Go to *Step 14*	Go to *Step 3*
3	1. Disconnect the power connector from the blower motor under the dashboard on the passenger side of the vehicle. 2. Turn the ignition ON. 3. Turn the blower ON. 4. Test for voltage on the connector. The terminal connected to the PPL wire is positive and the terminal connected to the BLK wire is negative. Is this voltage present?	11-14 V	Go to *Step 4*	Go to *Step 5*
4	Replace the blower motor. Is the repair complete?	-	System OK	-
5	Check fuse EF5 in the engine fuse block. Is the fuse blown?	-	Go to *Step 6*	Go to *Step 7*
6	1. Turn the ignition ON. 2. Use a short detector to locate a possible short in the following locations: ● Fuse panel to blower speed switch. ● Blower speed switch to heater resistor block. ● Heater resistor block to blower motor. ● Blower speed switch to blower HI relay. 3. Repair any short. 4. Replace any blown fuse. Is the repair complete?	-	System OK	-

Blower Electrical (Manual and Non A/C) (Cont'd)

Step	Action	Value(s)	Yes	No
7	1. Turn the ignition ON. 2. Set the blower switch on 4. 3. Check the blower motor ground. Is the ground OK?	-	Go to *Step 9*	Go to *Step 8*
8	Repair the blower motor ground. Is the repair complete?	-	System OK	-
9	Check the motor connector with a 12 volt test light. Does the test light come on?	-	Go to *Step 10*	Go to *Step 11*
10	Repair the open in the feed wire from the resistor block to the blower motor. Is the repair complete?	-	System OK	-
11	Use the 12 volt test light to check the power feed terminal on the blower speed switch. Does the light come on?	-	Go to *Step 12*	Go to *Step 13*
12	Replace the blower speed switch. Is the repair complete?	-	System OK	-
13	Repair the open in the power wire from the blower speed switch to the fuse panel. Is the repair complete?	-	System OK	-
14	Turn the blower on speed 4. Does the blower fail to operate at speed 4?	-	Go to *Step 15*	Go to *Step 21*
15	Check fuse EF2 in the engine fuse block. Is this fuse blown?	-	Go to *Step 16*	Go to *Step 17*
16	1. Turn the ignition ON. 2. Set the blower motor switch on 4. 3. Use a short detector to locate a possible short in the following locations: ● Engine fuse panel to blower HI relay. ● Blower HI relay to blower motor. 4. Repair any short. 5. Replace the EF2 fuse. Is the repair complete?	-	System OK	-
17	1. Turn the ignition switch ON. 2. Set the blower switch on 4. 3. Check for 12 volts on the blower HI relay coil terminal from the blower speed switch terminal A2. Is this voltage present?	-	Go to *Step 18*	Go to *Step 19*
18	Replace the blower speed switch. Is the repair complete?	-	System OK	-
19	1. Turn the ignition OFF. 2. Check for opens in the following locations: ● EF2 fuse to blower HI relay. ● Blower speed switch to blower HI relay. ● Blower HI relay to ground. ● Blower HI relay to blower motor. 3. Repair any opens. Is the repair complete?	-	System OK	Go to *Step 20*

Blower Electrical (Manual and NonA/C) (Cont'd)

Step	Action	Value(s)	Yes	No
20	Replace the blower HI relay. Is the repair complete?	-	System OK	-
21	1. Disconnect the resistor block connector. 2. Connect one lead of a self powered test light to any single lead on the resistor block. Use the other lead to probe each of the other two terminals. Does the test light illuminate on all terminals?	-	Go to *Step 23*	Go to *Step 22*
22	Replace the resistor block. Is the repair complete?	-	System OK	-
23	1. Turn the ignition to LOCK. 2. Disconnect the connector from the resistor block. 3. Connect a jumper lead from the positive terminal on the battery to any wire terminal in the connector. 4. Use a 12volt test light to check for voltage from the corresponding wire on the blower speed switch. 5. Repeat the same test on the other wires. Does the lamp light on all three wires?	-	Go to *Step 25*	Go to *Step 24*
24	Replace the blower speed switch. Is the repair complete?	-	System OK	-
25	Repair the open in the affected wire. Is the repair complete?	-	System OK	-

IMPROPER AIR DELIVERY OR NO MODE SHIFT (MANUAL AND NON A/C)

This procedure provides a test of all functions of the heater/defroster unit.

1. Warm up the vehicle.
2. Keep the engine running.
3. Perform the tests outlined in the table below and look for the results indicated.

CONTROL SETTINGS			CORRECT RESULTS				
MODE KNOB	TEMP. CONTROL	BLOWER MOTOR SWITCH	BLOWER SPEED	POWER VENT OUTLET	FLOOR OUTLET	DEFROST OUTLET	SIDE WINDOW OUTLET
Vent	Cold	Off	Off	No Airflow	No Airflow	No Airflow	No Airflow
Vent	Cold	4	High	Ambient Airflow	No Airflow	No Airflow	No Airflow
Floor	Cold to Hot	4	High	No Airflow	Cold to Hot Airflow	Minimum Cold to Hot Airflow	Minimum Cold to Hot Airflow
Defroster	Cold to Hot	4	High	No Airflow	Minimum Cold to Hot Airflow	Cold to Hot Airflow	Minimum Cold to Hot Airflow

If any of these settings does not produce the correct results, perform the following diagnostic procedure.

Improper Air Delivery or No Mode Shift (Manual and Non A/C) (Cont'd)

Step	Action	Value(s)	Yes	No
1	Verify the customer's complaint. Are the customer's concerns verified?	-	Go to *Step 2*	System OK
2	1. Examine the affected door in the unit for proper attachment to the vacuum actuator. 2. Check the actuator connection to the door. 3. Check that the vacuum hose is properly connected. Is everything connected properly?	-	Go to *Step 4*	Go to *Step 3*
3	Repair as necessary. Is the repair complete?	-	System OK	-
4	1. Disconnect the actuator at the door. 2. Check the range of the door travel and the effort required to move it. Does the door move freely through its entire range of travel so that it can close at both ends of the range?	-	Go to *Step 5*	Go to *Step 3*
5	Check the travel of the actuator by turning the control knob with the engine running. Is the actuator travel OK?	-	Go to *Step 6*	Go to *Step 7*
6	1. Reinstall the actuator. 2. Recheck the system using the „Control Settings/Correct Results" tests in this procedure. Does the system perform properly?	-	System OK	Go to *Step 9*
7	1. Check the vacuum hose at the control. 2. Check for a broken control. Is there a problem with the vacuum hose or the control?	-	Go to *Step 8*	Go to *Step 9*
8	Repair the vacuum hose or the control as necessary. Is the repair complete?	-	System OK	Go to *Step 9*
9	Recheck the system using the „Control Settings/Correct Results" tests in this procedure. Is the repair complete?	-	System OK	Go to *Step 10*
10	Check for airflow from the defroster or the vent outlets. Is there high airflow from the defroster or the vent outlets?	-	Go to *Step 11*	Go to *Step 12*
11	Adjust the heater door at the floor and the vent door to get the proper airflow. Is the repair complete?	-	System OK	-
12	Switch the mode knob to defrost. Is the defroster airflow OK?	-	Go to *Step 13*	Go to *Step 14*
13	1. Remove the heater outlet. 2. Check the heater outlet for obstructions. 3. Remove any obstructions in the heater outlet. Is the repair complete?	-	System OK	-
14	Check the blower speeds for change in the airflow. Does the blower speed increase as the control is turned from 1 to 4?	-	Go to *Step 15*	Go to „Blower Electrical (Manual and Non A/C)"

Improper Air Delivery or No Mode Shift (Manual and Non A/C) (Cont'd)

Step	Action	Value(s)	Yes	No
15	1. Check for obstructions in the system at the blower inlet and check the air filter if the vehicle is so equipped. 2. Remove any obstructions at the blower inlet and replace the filter if it is clogged. Is the repair complete?	-	System OK	Go to *Step 16*
16	1. Set the blower on 4. 2. Rotate the temperature control from full hot to full cold. 3. Listen for an airflow change. Does the airflow change?	-	Go to *Step 17*	Go to *Step 18*
17	1. Check the temperature door, the cable, the linkage, and the control. 2. Adjust the temperature control to full hot. Is the repair complete?	-	System OK	-
18	1. Check the system for any obstruction between the blower and the system outlets. 2. Remove any obstruction between the blower and the system outlets. Is the repair complete?	-	System OK	-

TOO MUCH HEAT

Step	Action	Value(s)	Yes	No
1	Verify the customer's complaint. Are the customer's concerns verified?	-	Go to *Step 2*	System OK
2	Is there too much heat when the mode switch is in the floor position?	-	Go to *Step 3*	Go to *Step 9*
3	Is there objectionable defroster bleed?	-	Go to *Step 4*	Go to *Step 5*
4	1. Check the door travel, the cable, the vacuum actuators, and the linkage for the heater and the defroster. 2. Adjust or repair, as required. Is the repair complete?	-	System OK	-
5	1. In vehicles equipped with A/C, set the A/C switch OFF. 2. In all vehicles, set the blower speed to maximum. 3. Set the temperature to full hot. 4. Turn the ignition switch ON. 5. Start the engine. 6. Check for airflow from the floor outlets. 7. Check the floor outlet attachment. Is the airflow high?	-	Go to *Step 6*	Go to *Step 8*
6	Check for a change in the airflow at different blower speeds. Does the airflow change as the setting for the blowerspeed switch is changed?	-	Go to *Step 7*	Go to „Blower Electrical (Manual and Non A/C)"

Too Much Heat (Cont'd)

Step	Action	Value(s)	Yes	No
7	1. Check the temperature door travel, the cable, and the linkage. 2. Adjust to full cold. 3. Check for full hot. Is the repair complete?	-	System OK	-
8	Adjust or repair the floor/defroster and/or the vent/ floor mode. Is the repair complete?	-	System OK	-
9	In the vent position, is the problem objectionable bleed?	-	Go to *Step 10*	Go to *Step 15*
10	1. Check the system case for leaks. 2. Check the floor outlet attachment. Are there problems?	-	Go to *Step 11*	Go to *Step 12*
11	Repair the system case or the floor outlet attachment as required. Is the repair complete?	-	System OK	Go to *Step 12*
12	1. Turn the ignition switch OFF. 2. Turn the temperature control knob to full hot, then rapidly to full cold. Do you hear the door slam just before you reach the end of the control travel?	-	Go to *Step 13*	Go to *Step 14*
13	Adjust the vent door to vent more. Is the repair complete?	-	System OK	-
14	1. Check the temperature door travel, the cable, and the linkage. 2. Verify that the temperature door goes to full cold. 3. Check the temperature door for full hot. Is the temperature door travel correct?	-	System OK	-
15	1. Set the fresh air/recirculating air control to fresh air (indicator lamp off). 2. Set the temperature control to full cold. 3. Start the vehicle and allow the engine to warm up. 4. Measure the air temperature at the blower inlet, or cowl, and at the vent air outlet inside the vehicle. Is the outlet air more than 5°C (41°F) warmer than the inlet air?	-	Go to *Step 16*	System OK
16	1. Check for hot air leaks from the engine compartment to the blower inlet. 2. Repair as needed. Is the repair complete?	-	System OK	-

CONTROLS

Step	Action	Value(s)	Yes	No
1	Verify the customer's complaint. Are the customer's concerns verified?	-	Go to *Step 2*	System OK
2	Move controls other than the temperature adjustment. Is an excessive effort required to move the controls?	-	Go to *Step 15*	Go to *Step 3*
3	Move the temperature control. Is an excessive effort required to move the control?	-	Go to *Step 6*	Go to *Step 4*
4	Move the blower control to maximum. Does the temperature door move too easily?	-	Go to *Step 5*	System OK
5	Remove the cable from the controller. Does the control knob turn freely, without the click stops?	-	Go to *Step 15*	-
6	Check the cables for improper routing, kinks, wiring interference, or other instrument panel interference. Is there a problem?	-	Go to *Step 7*	Go to *Step 8*
7	Repair as needed. Is the repair complete?	-	System OK	-
8	1. Remove the cable from the temperature door. 2. Cycle the door manually. 3. Check for door binding. Is there any door binding?	-	Go to *Step 9*	Go to *Step 12*
9	Check the door seal for proper installation. Is the door seal OK?	-	Go to *Step 10*	Go to *Step 11*
10	1. Check a binding door for shaft alignment, a bent shaft, a bent door, or a warped case. 2. Repair, as needed. Is the repair complete?	-	System OK	-
11	Repair the door seal, as needed. Is the repair complete?	-	System OK	-
12	Check for control binding. Does the control bind?	-	Go to *Step 14*	Go to *Step 13*
13	1. Reinstall the cable to the door. 2. Check the clearance for the cable to dash components. 3. Repair any interference. Is the repair complete?	-	System OK	-
14	1. Remove the cable from the control. 2. Check the control for binding. Does the control bind?	-	Go to *Step 15*	Go to *Step 16*
15	Replace the control. Is the repair complete?	-	System OK	-
16	Replace the cable. Is the repair complete?	-	System OK	-

BLOWER NOISE

Step	Action	Value(s)	Yes	No
1	Verify the customer's complaint. Are the customer's concerns verified?	-	Go to *Step 2*	System OK
2	1. Sit inside the vehicle. 2. Close the doors and the windows. 3. Turn the ignition ON. 4. Start the engine. 5. Set the temperature to full cold. 6. Cycle through the blower speeds, the modes, and the temperature settings in order to find the noise. Is the blower noise constant at high blower speeds or certain modes, but absent at lower speeds or in other modes?	-	Go to *Step 11*	Go to *Step 3*
3	Check for vibrations from the blower motor and fan assembly at each blower speed by feeling the blower motor housing. Do you find excessive vibration?	-	Go to *Step 6*	Go to *Step 4*
4	1. Remove the blower motor and fan assembly. Refer to ”Blower Motor” in this section. 2. Check for foreign material at the opening of the blower inlet. Do you find any foreign material at the blower inlet?	-	Go to *Step 5*	Go to *Step 6*
5	Remove all foreign material. Is the repair complete?	-	System OK	Go to *Step* 6
6	1. Examine the blower fan for wear spots, cracked blades, a cracked hub, a loose fan retaining nut, or bad alignment. 2. Examine the blower case for wear spots. Do you find any problem?	-	Go to *Step 7*	Go to *Step 9*
7	Repair as required. Is the repair complete?	-	System OK	Go to *Step 8*
8	Replace the motor and fan assembly. Is the repair complete?	-	System OK	Go to *Step 9*
9	If the noise is a click/tick or whine, replace the mo□ tor. Is the repair complete?	-	System OK	Go to *Step 10*
10	Reinstall the original motor. Is the problem still present?	-	Go to *Step 11*	System OK
11	1. Set the blower speed on maximum. 2. Check full hot to full cold temperature positions in the defrost, floor, and vent modes. Is the noise present in the defrost mode only?	-	Go to *Step 12*	Go to *Step 13*
12	1. Check the ducts for obstructions or foreign materials. 2. Remove any obstructions or foreign materials. 3. Check the floor/defroster door seals. 4. Repair or replace the door seals, as needed. Is the repair complete?	-	System OK	-
13	Is the noise present in the floor mode only?	-	Go to *Step 12*	Go to *Step 14*

Blower Noise (Cont'd)

Step	Action	Value(s)	Yes	No
14	Is the noise present in the vent mode only?	-	Go to *Step 15*	Go to *Step 16*
15	1. Check the ducts for obstructions or foreign materials. 2. Remove any obstructions or foreign materials. 3. Check the vent door seals. 4. Repair or replace as needed. Is the repair complete?	-	System OK	-
16	Is the noise present in all modes, but not all temperature positions?	-	Go to *Step 17*	Go to *Step 18*
17	1. Check the temperature door seals. 2. Repair or replace, as needed. Is the repair complete?	-	System OK	-
18	1. Check the system for obstructions or foreign materials between the fan and the temperature door. 2. Repair or replace, as needed. Is the repair complete?	-	System OK	Go to *Step 2*

MAINTENANCE AND REPAIR

ON-VEHICLE SERVICE

TEMPERATURE CABLE ADJUSTMENT

Because the cable and the cable housings have fixed lengths, it is impossible to make a temperature cable adjustment.

The heater/air distributor case linkage also cannot be adjusted.

If a malfunction is suspected, verify the proper operation of the controller and the mechanical doors for the heater/air distributor case assembly.

TEMPERATURE CONTROL CABLE

(Left-Hand Drive Shown, Right-Hand Drive Similar)

Removal Procedure

1. Disconnect the negative battery cable.
2. Remove the glove box. Refer to *Section 9E, Instrumentation/Driver Information*.
3. Slide the cable eyelet off the post on the temperature door lever.
4. Disconnect the cable retainer from the blower housing.

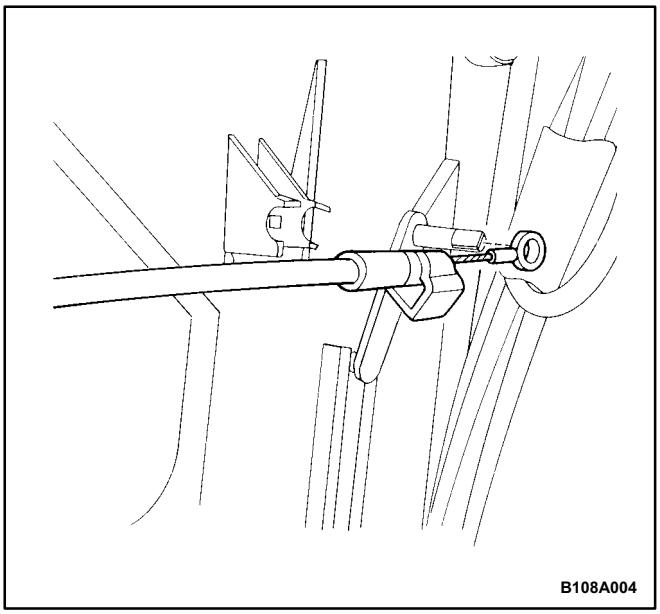

B108A004

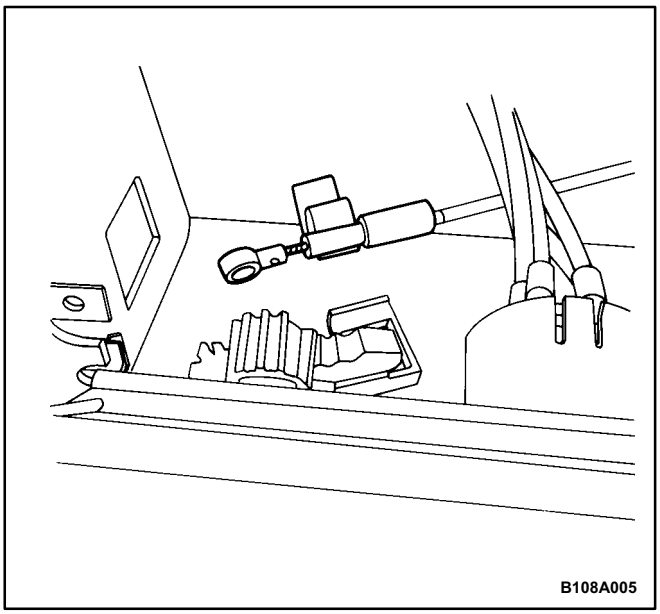

B108A005

5. Remove the audio system trim plate. Refer to *Section 9F, Audio Systems*.
6. Remove the four controller retaining screws.
7. Pull out the controller to provide clearance for removal of the temperature control cable.
8. Disconnect the temperature control cable eyelet from the post on the controller.
9. Snap the cable housing connector out of the slide position on the controller.

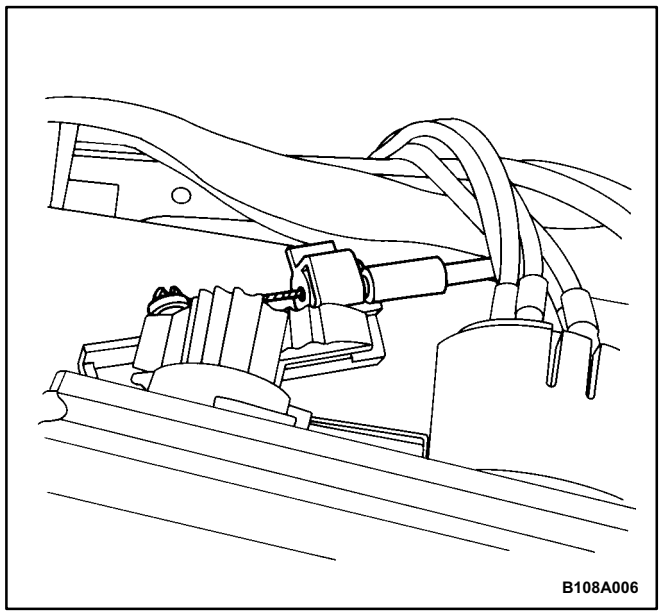

Installation Procedure

1. Install the temperature control cable eyelet to the post on the controller.
2. Snap the cable housing connector to the slide position on the controller.

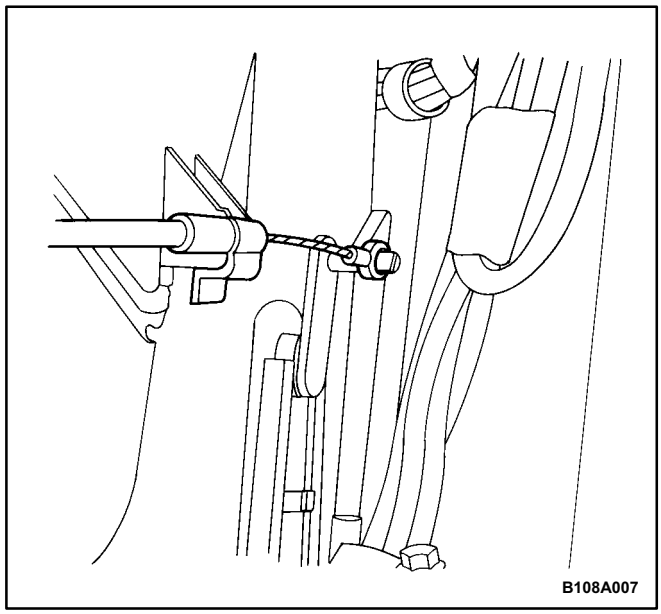

3. Gently insert the controller into position on the center console.
4. Install the four controller retaining screws.

Tighten

Tighten the controller retaining screws to 4 N•m (35 lb•in).

5. Install the temperature control cable eyelet to the post on the temperature door lever.
6. Snap the cable retainer to the blower housing.

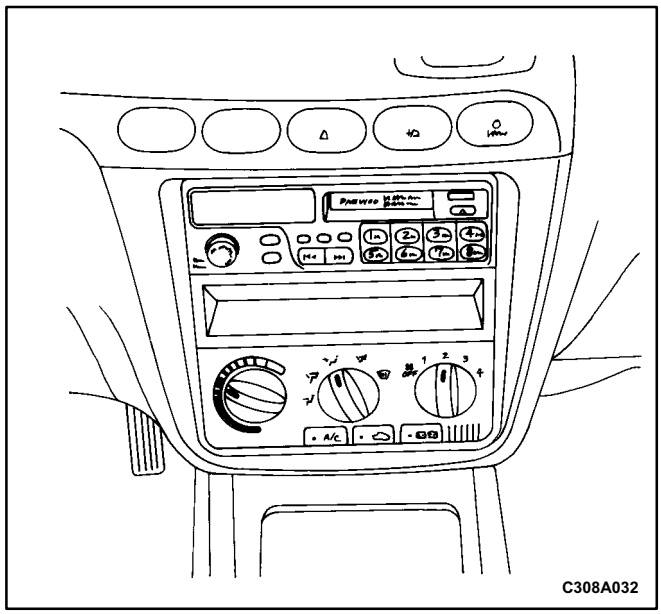

7. Move the temperature control to verify the smooth operation and function of the door and the cable.
8. Install the audio system trim plate. Refer to *Section 9F, Audio Systems*.
9. Connect the negative battery cable.
10. Operate the heating and cooling systems to verify proper function.
11. Install the glove box. Refer to *Section 9E, Instrumentation/Driver Information.*

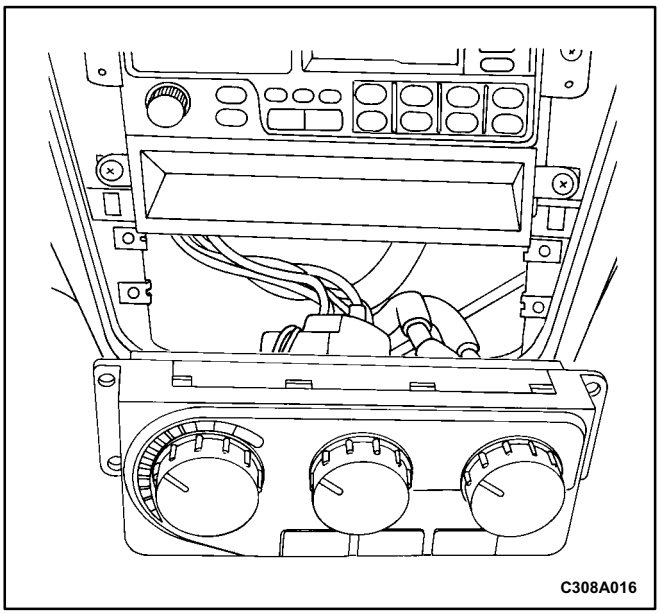

CONTROL ASSEMBLY

Removal Procedure

1. Disconnect the negative battery cable.
2. Remove the audio system trim plate. Refer to S*ection 9F, Audio Systems.*
3. Remove the four controller retaining screws.
4. Pull out the controller to provide clearance for removal of the temperature control cable.

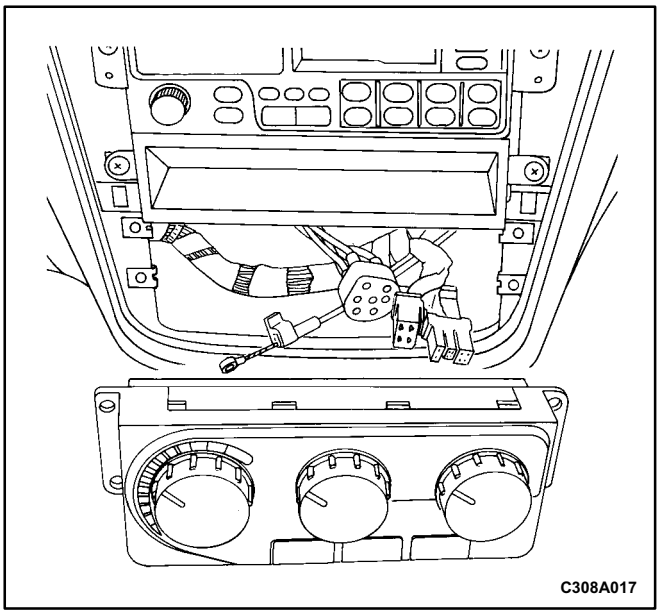

5. Disconnect the temperature control cable by gently prying the cable eyelet from the post on the controller. Unsnap the cable housing from the mechanical slide. Note the location of the cable and the housing for ease of installation.
6. Disconnect the electrical connectors.
7. Remove the vacuum hose connection block from the mode control switch.

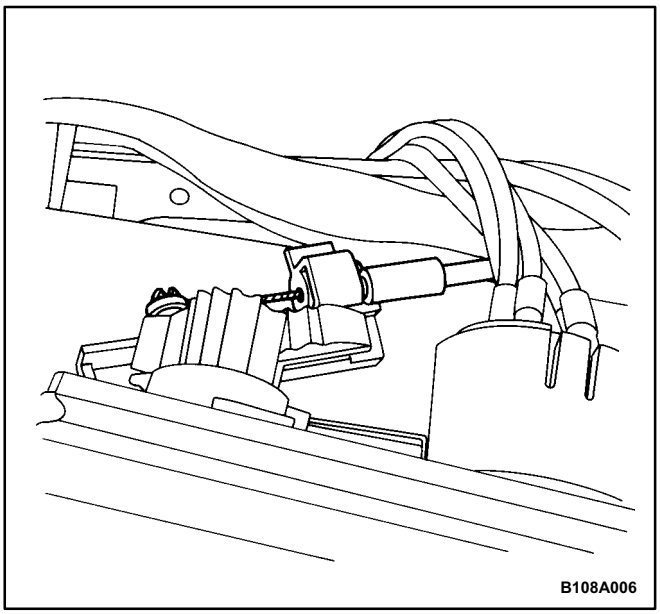

Installation Procedure

1. Connect the vacuum hose connection block to the mode control switch.
2. Press the cable end eyelet onto the post on the controller.
3. Attach the mechanical cable housing to its original control position.
4. Connect the electrical connectors to the sockets on the back of the controller.

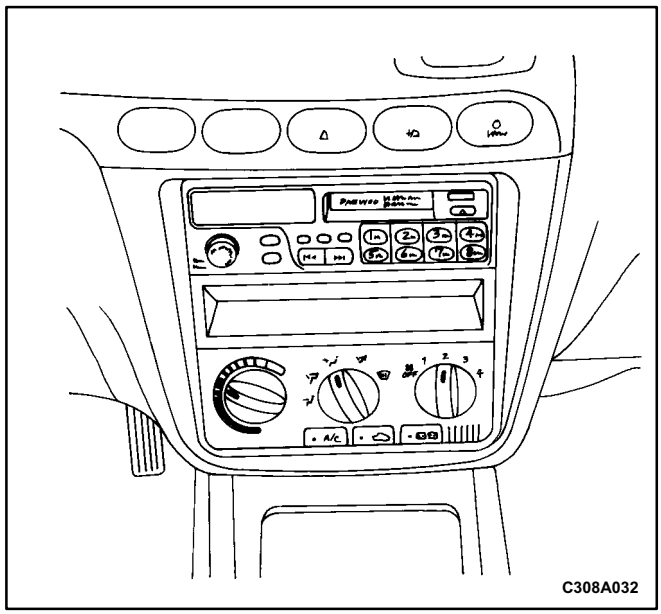

5. Gently insert the controller into position on the center console.
6. Install the retaining screws.

   Tighten

   Tighten the controller retaining screws to 4 N•m (35 lb•in).
7. Connect the negative battery cable.
8. Confirm the proper operation of the controller by moving it through all of the controller's possible functioning positions.
9. Install the audio system trim plate. Refer to *Section 9F, Audio Systems.*

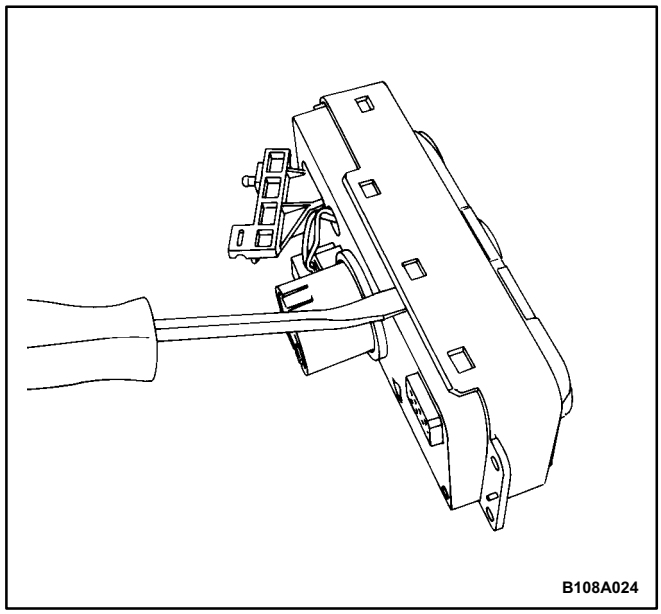

CONTROL ASSEMBLY KNOB LIGHTING

(Left-Hand Drive Shown, Right-Hand Drive Similar)

Removal Procedure

1. Disconnect the negative battery cable.
2. Remove the heating and ventilation system control assembly. Refer to „Control Assembly” in this section.
3. Disconnect the small connector to the vacuum control switch on the rear of the assembly case.
4. Separate the control assembly case halves.

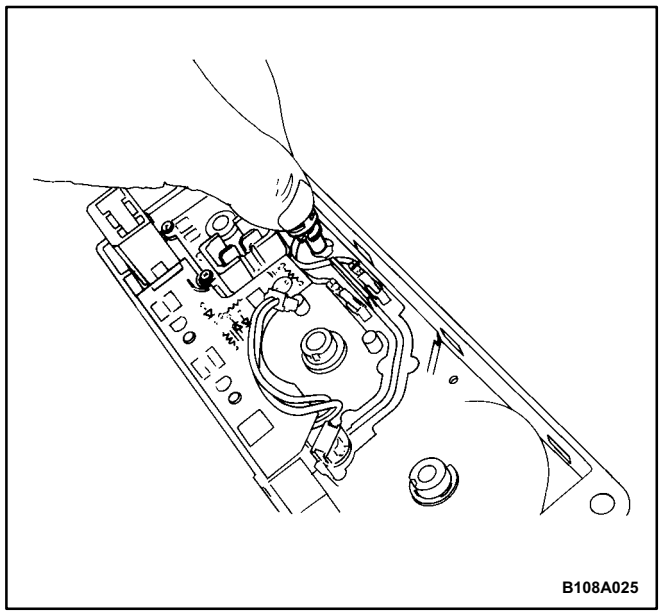

5. Turn the bulb holder to the left and pull out the bulb.

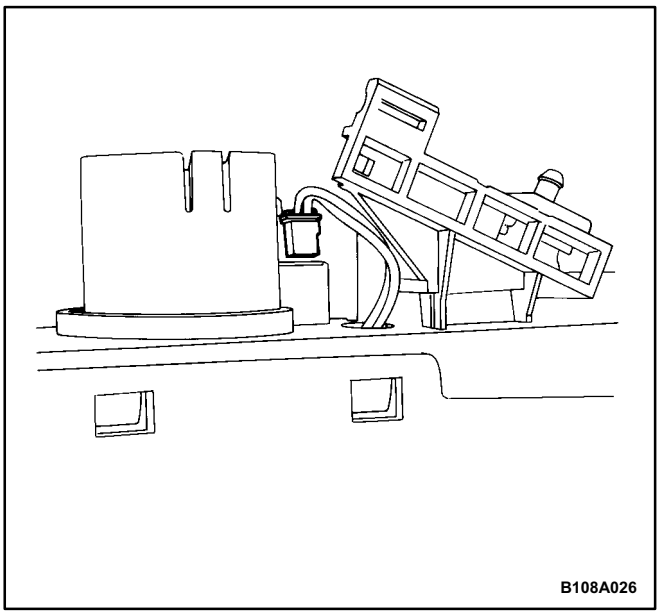

Installation Procedure

1. Install the bulb into the holder and turn the bulb to the right.
2. Install the control assembly case halves.
   - Pass the connector for the vacuum switch through the hole in the rear assembly case part.
   - Be sure to align the flats on mating control shafts of the two case halves.
3. Install the connector into the vacuum control switch.

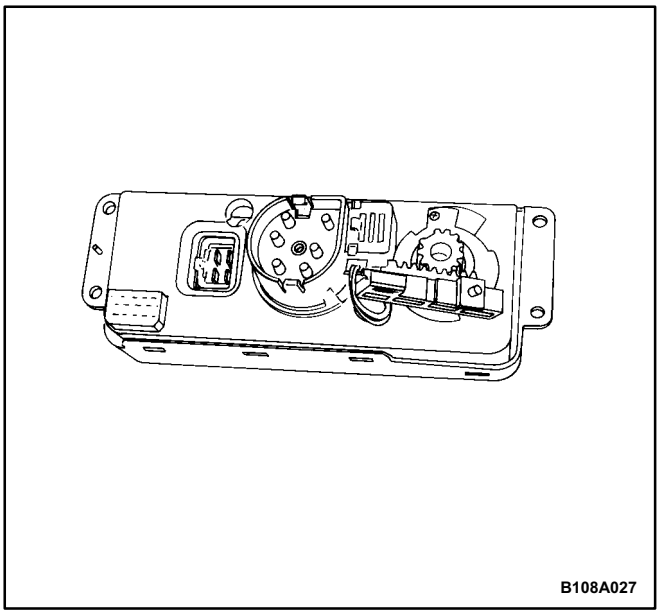

4. Install the control assembly. Refer to „Control Assembly" in this section.
5. Connect the negative battery cable.
6. Check the knob light for proper operation.

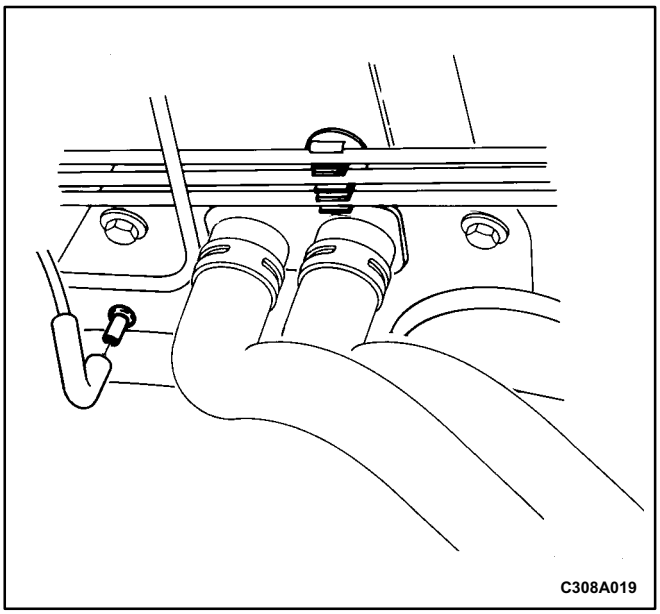

HEATER/AIR DISTRIBUTOR CASE ASSEMBLY

(Left-Hand Drive Shown, Right-Hand Drive Similar)

Removal Procedure

1. Disconnect the negative battery cable.
2. Remove the instrument panel carrier assembly. Refer to *Section 9E, Instrumentation/Driver Information.*
3. Drain the cooling system. Refer to *Section 1D, Engine Cooling*.
4. Twist the vacuum hose connection and remove it from beside the heater hoses.

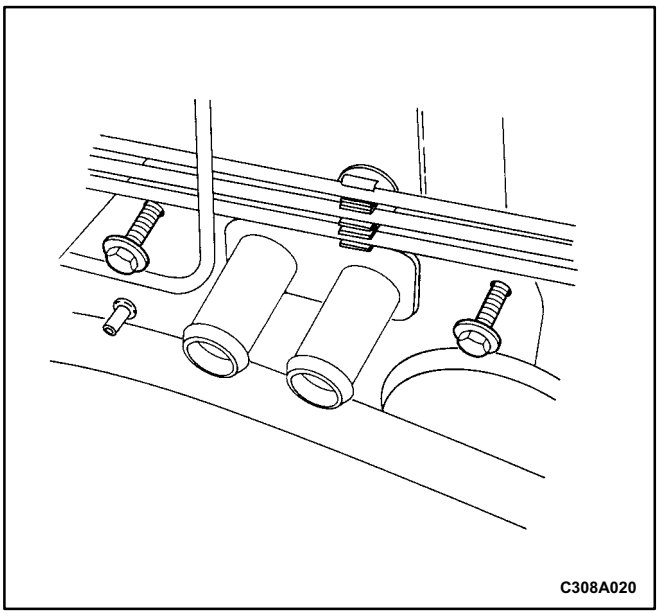

5. Compress the heater hose clamps at the fire wall and slide the clamps toward the engine.
6. Remove the two heater hoses from the core pipes at the fire wall.
7. Remove the screws that secure the heater/air distributor case assembly to the fire wall on either side of the heater hoses.

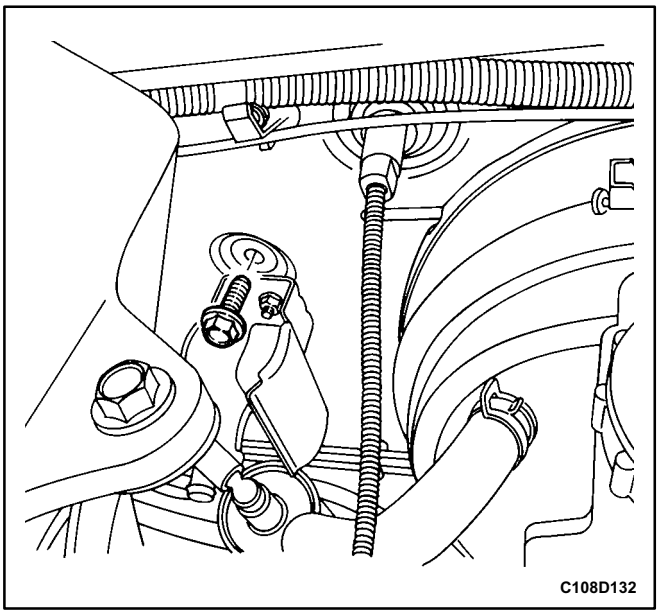

8. Remove the heater/air distributor case screw from above the fuel filter on the engine compartment side of the fire wall.

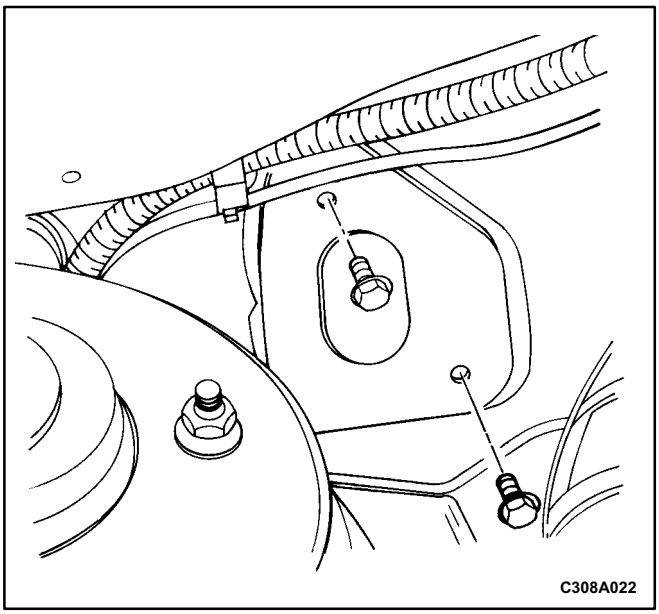

9. Have an assistant support the heater/air distributor case from inside the vehicle.
10. Remove the heater/air distributor case screws from the connecting block mount on the engine compartment side of the fire wall. The heater/air distributor case assembly will start to drop.

Notice: To avoid damaging the heater core pipes, move the heater/air distributor case assembly straight away from the vehicle until the pipes are free from their openings in the fire wall.

11. Remove the heater/air distributor case assembly.

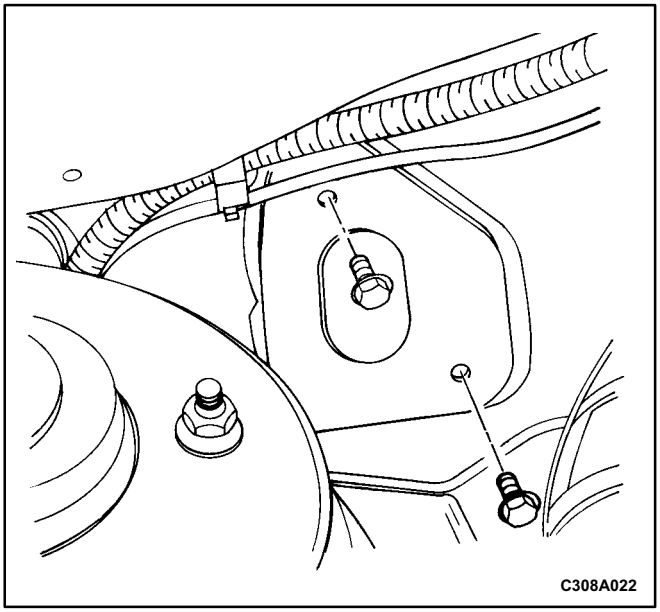

Installation Procedure

1. Position the heater/air distributor case assembly in the vehicle.

Notice: To avoid damaging the vehicle, make sure the heater core pipes do not contact the fire wall opening.

2. Slowly raise the heater/air distributor case assembly into position against the fire wall and hold it there while the screws are installed and tightened from the engine side of the fire wall.
3. Install the heater/air distributor case assembly screws at the connecting block mount on the engine compartment side of the fire wall.

Tighten

Tighten the heater/air distributor case assembly screws to 8 N•m (71 lb•in).

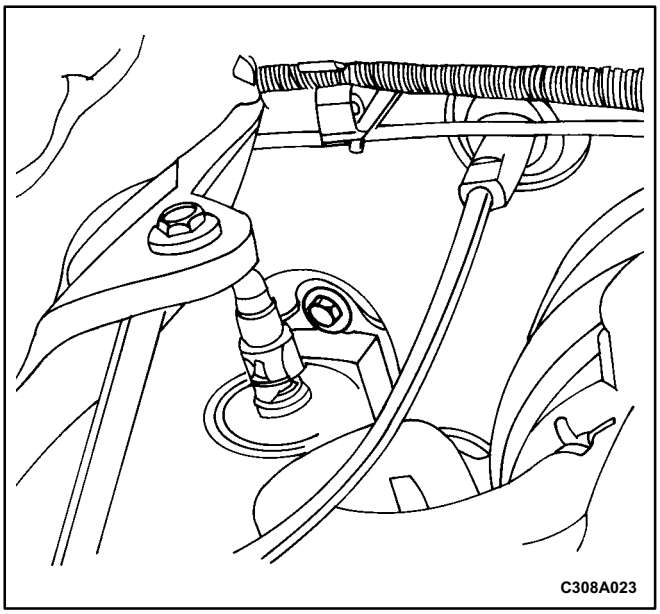

4. Align and install the heater/air distributor case assembly screw above the fuel filter.

Tighten

Tighten the heater/air distributor case assembly screw to 8 N•m (71 lb•in).

5. Replace the fuel filter into its mounting clamp.

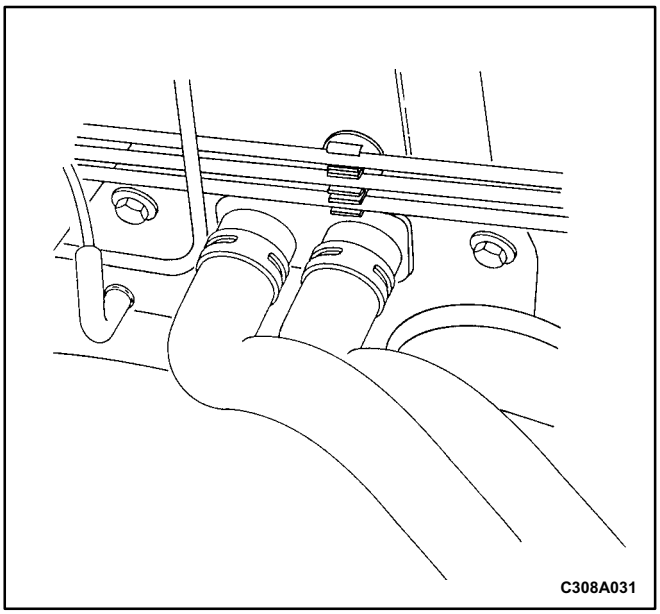

6. Install the heater/air distributor case assembly screws on either side of the heater core pipes.

Tighten

Tighten the heater/air distributor case assembly screws to 8 N•m (71 lb•in).

7. Install the two heater hoses.
8. Slide the heater hose clamps into position.
9. Install the vacuum hose.

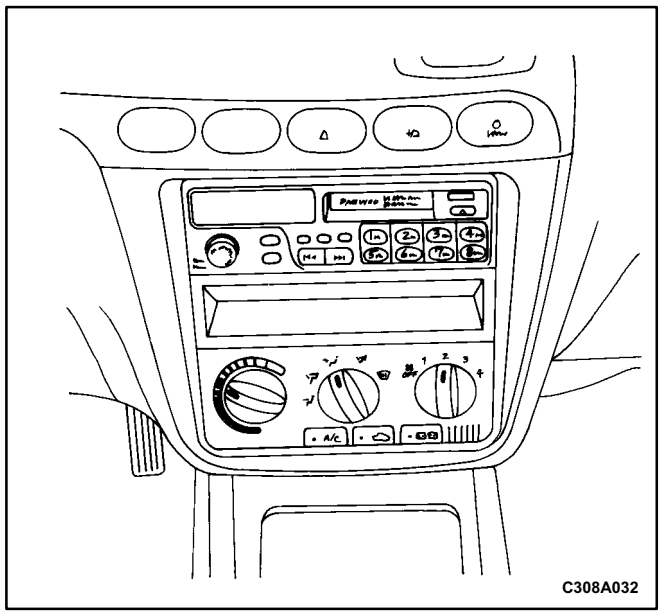

10. Install the instrument panel carrier assembly. Refer to *Section 9E, Instrumentation/Driver Information.*
11. Fill the cooling system. Refer to *Section 1D, Engine Cooling*.
12. Connect the negative battery cable.
13. Operate the controls to verify that the heating and ventilation systems function properly.

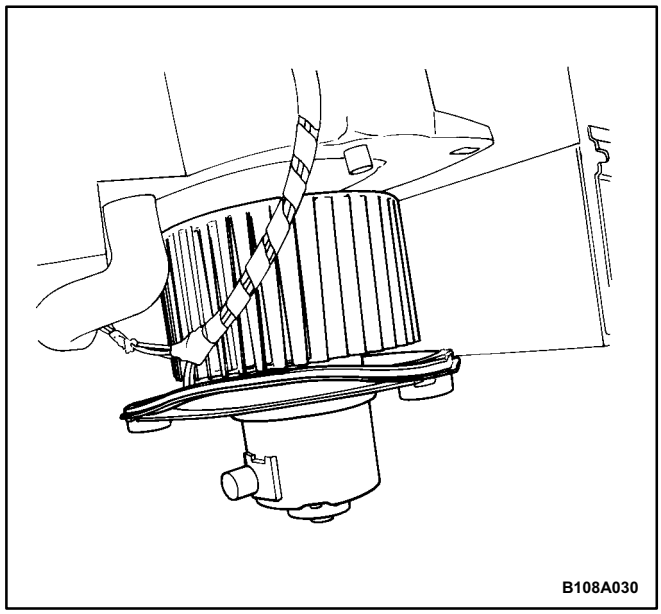

BLOWER MOTOR

Removal Procedure

1. Disconnect the negative battery cable.
2. Remove the glove box. Refer to *Section 9E, Instrumentation/Driver Information*.
3. Remove the footwell upper cover. Refer to *Section 9E, Instrumentation/Driver Information*.
4. Disconnect the blower motor electrical connector.
5. Remove the blower motor cooling hose.
6. Remove the screws that secure the motor to the heater/air distributor case.
7. Remove the motor, the seal, and the shock mount pads from the heater/air distributor case by gently pulling the motor straight down and out.

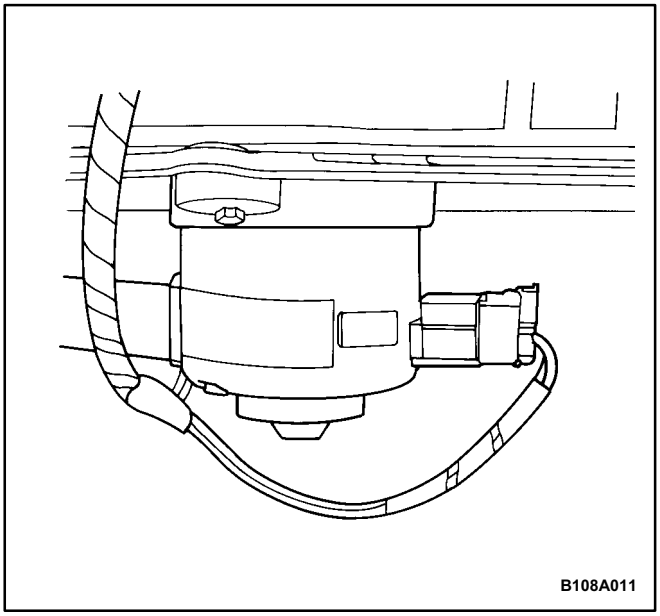

Installation Procedure

1. Install the blower motor and the seal with the shock mount pads in the heater/air distributor case. Hold the blower motor in position.
2. Install the screws to secure the blower motor to the heater/air distributor case.

   Tighten

   Tighten the blower motor to heater/air distributor case screws to 6 N•m (53 lb•in).
3. Install the blower motor cooling hose.
4. Connect the blower motor electrical connector.
5. Connect the negative battery cable.
6. Confirm that the blower motor operates properly.
7. Replace the footwell upper cover. Refer to *Section 9E, Instrumentation/Driver Information*.
8. Replace the glove box. Refer to *Section 9E, Instrumentation/Driver Information*.

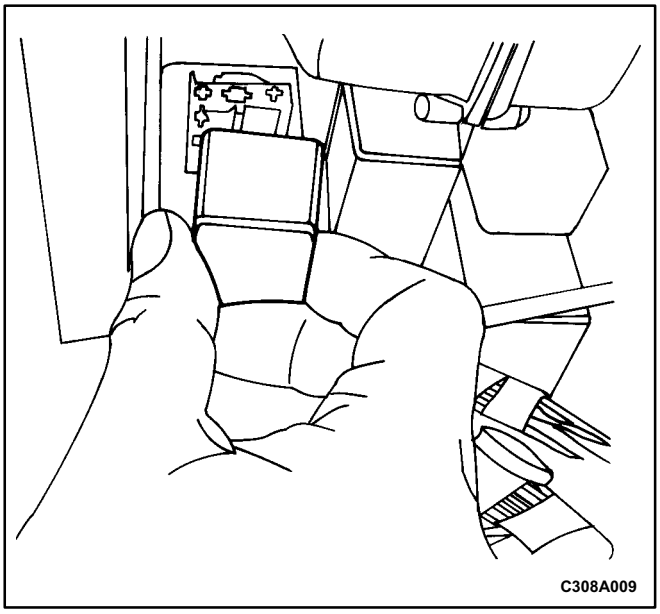

HIGHBLOWER RELAY

Removal Procedure

1. Disconnect the negative battery cable.
2. Locate the relay box under the instrument panel on the driver's side.
3. Pull out the high blower relay at the front of the relay box.

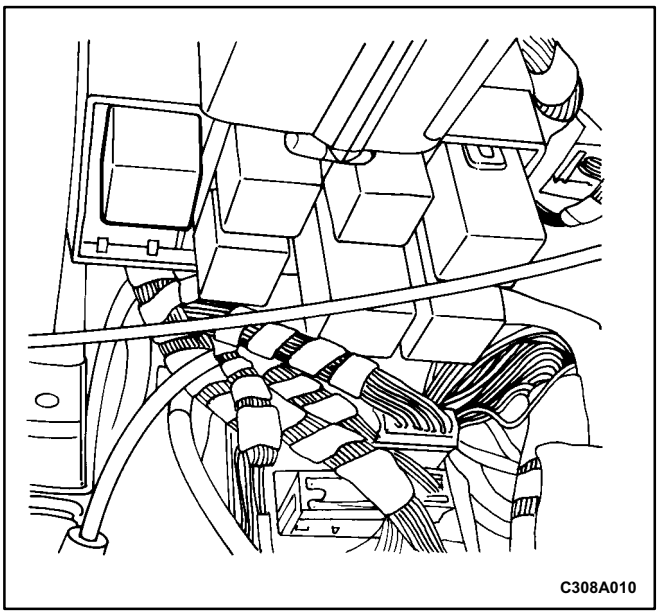

Installation Procedure

1. Align the high blower relay contacts with the relay terminal slots.
2. Push the relay firmly into base. The relay must be seated and flush with the base edge.
3. Connect the negative battery cable.

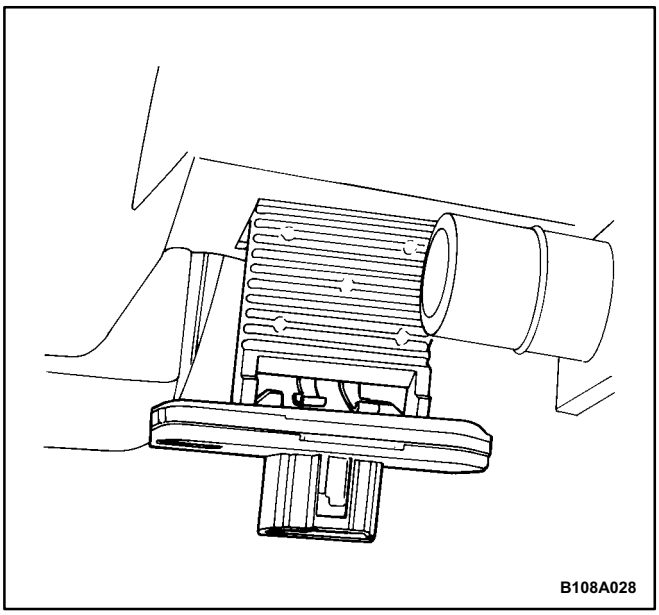

BLOWER RESISTOR

Removal Procedure

1. Disconnect the negative battery cable.
2. Remove the glove box. Refer to *Section 9E, Instrumentation/Driver Information*.
3. Remove the footwell upper cover. Refer to *Section 9E, Instrumentation/Driver Information*.
4. Disconnect the electrical connector at the resistor.
5. Remove the mount screws from the resistor.
6. Remove the resistor from the heater/air distributor case by gently pulling the resistor downward.

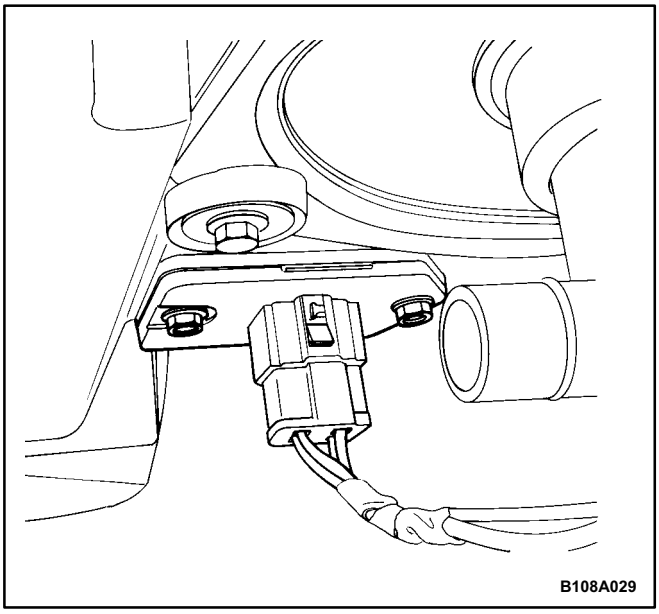

Installation Procedure

1. Install the new resistor into the heater/air distributor case with the screws.

   Tighten

   Tighten the blower motor resistor screws to 6 N•m (53 lb•in).
2. Connect the electrical connector at the resistor.
3. Connect the negative battery cable.
4. Confirm the proper performance of the blower.
5. Replace the footwell upper cover. Refer to *Section 9E, Instrumentation/Driver Information*.
6. Replace the glove box. Refer to *Section 9E, Instrumentation/Driver Information*.

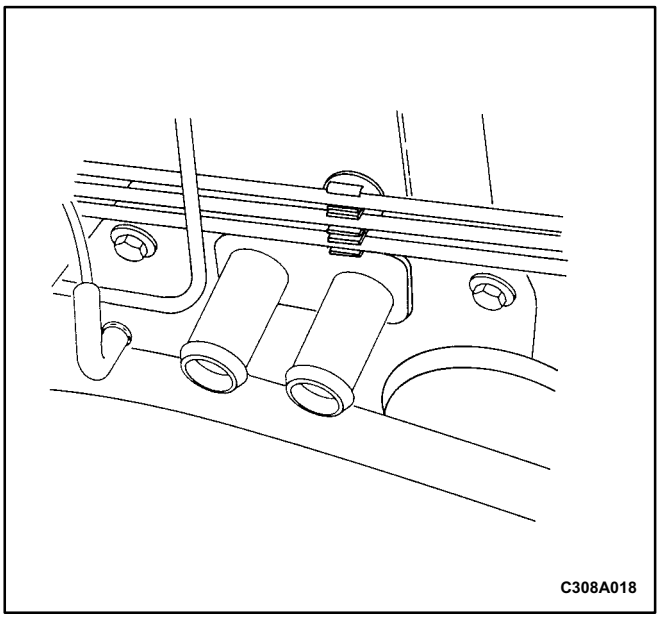

HEATER HOSES

Removal Procedure

1. Partially drain the cooling system.
2. Raise and suitably support the vehicle.
3. Compress and slide rearward the two heater hose spring clamps at the fire wall.
4. Gently twist the hose from the left to the right and back again to loosen the bond between the hose and the tube.
5. Remove the end of the hose from the tube.
6. Repeat Steps 3 and 4 with the other hose.
7. Compress the heater hose spring clamp on the inlet coolant line and slide the clamp rearward.
8. Remove the heater hose from the vehicle.
9. Compress the heater hose spring clamp at the connection below the intake manifold and slide the clamp rearward.
10. Remove the heater hose from the vehicle.

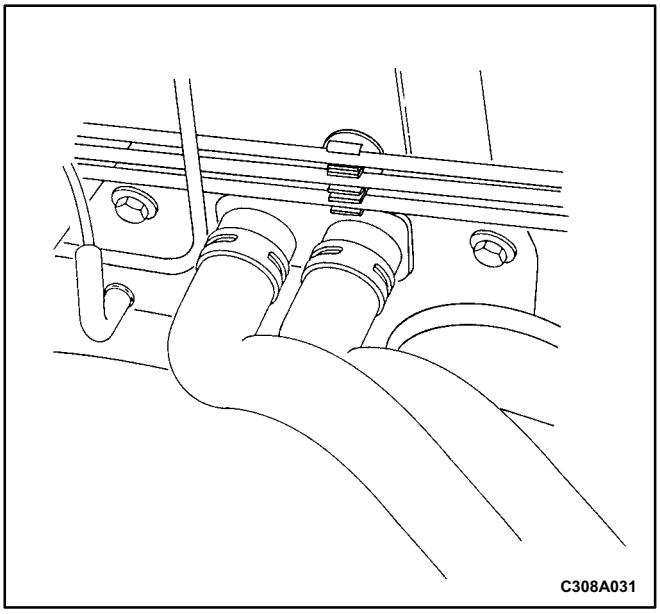

Installation Procedure

1. Install the left heater hose to the coolant inlet line fitting. Slide the end of the heater hose over the coolant fitting until the hose is seated.
2. Install the right heater hose to the fitting below the intake manifold. Slide the end of the heater hose over the fitting until it is seated.
3. Install and seat the other end of each heater hose.
4. Compress and slide the spring clamps into position on the heater hoses and release the tension.
5. Fill the cooling system.
6. Check the hoses for leaks.
7. Lower the vehicle.

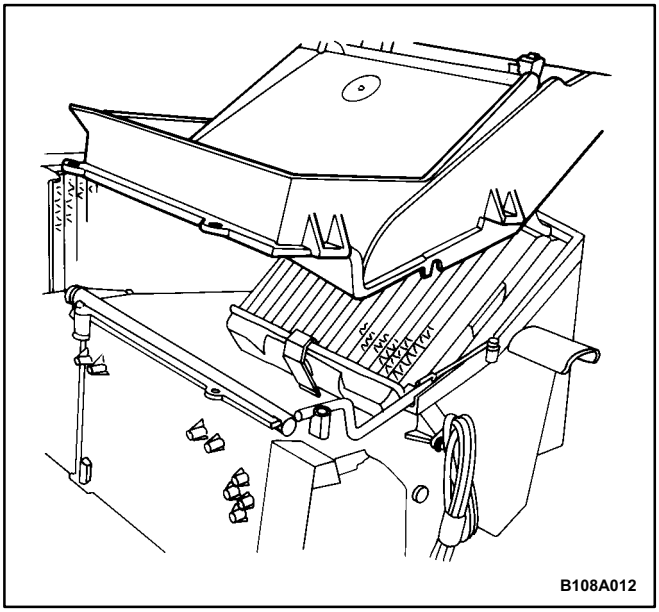

HEATER CORE

Removal Procedure

1. Disconnect the negative battery cable.
2. Remove the instrument panel from the vehicle. Refer to *Section 9E, Instrumentation/Driver Information*.
3. Remove the heater/air distributor case from the vehicle. Refer to „Heater/Air Distributor Case Assembly" in this section.
4. Disconnect the vacuum actuators from the vent/floor door and the defroster door.
5. Remove the vacuum actuators from the heater/air distributor case.
6. Remove the screws that secure the heater core cover to the heater/air distributor case assembly.
7. Slowly separate the lower heater core cover from the rest of the assembly.

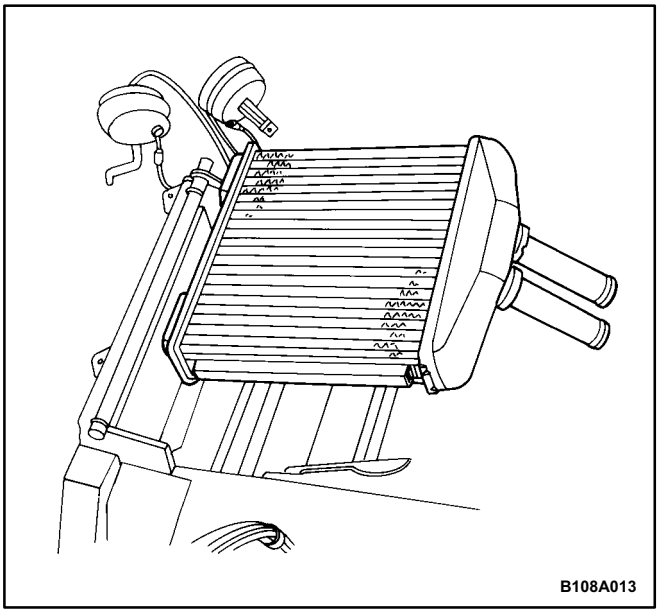

8. Remove the screw and the bracket clamp that secure the heater core lines to the case.
9. Remove the spring clamp that secures the heater core body to the case.
10. Remove the heater core from the case.

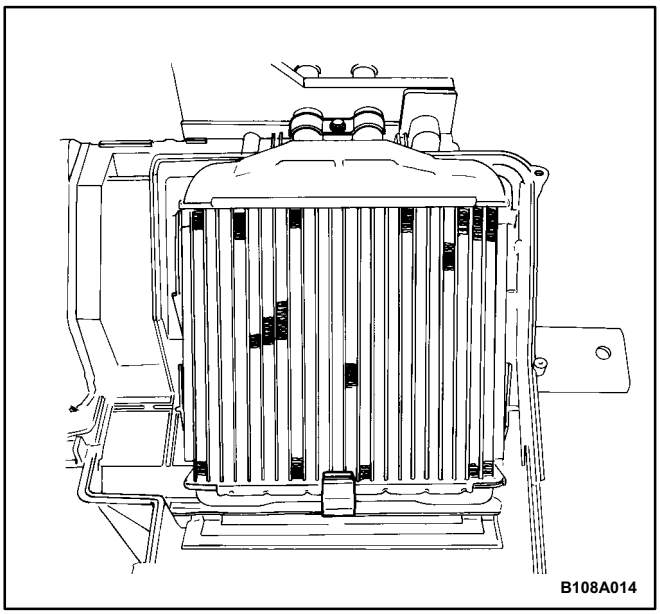

Installation Procedure

1. Install the heater core into the case.
2. Secure the heater core lines to the case with the retaining bracket clamp and the screw.

   Tighten

   Tighten the heater core retaining bracket screw to 3 N•m (27 lb•in).
3. Install the heater core body with the retaining spring clamp.

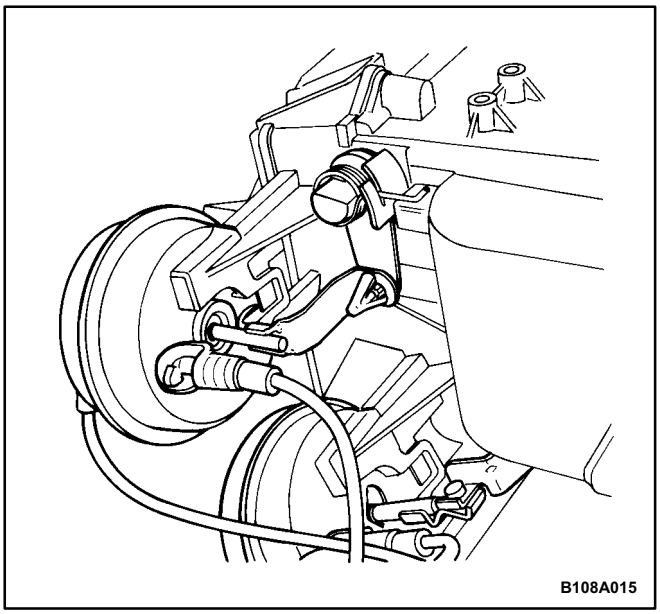

4. Install the heater core cover.
5. Install and tighten the screws that secure the heater core cover to the heater/air distributor case assembly.

   Tighten

   Tighten the heater core cover screws to 3 N•m (27 lb•in).
6. Install the actuators for the vent/floor and the defroster doors.
7. Install the heater/air distributor case. Refer to „Heater/Air Distributor Case Assembly" in this section.
8. Install the instrument panel. Refer to *Section 9E, Instrumentation/Driver Information*.
9. Fill the cooling system.
10. Connect the negative battery cable.

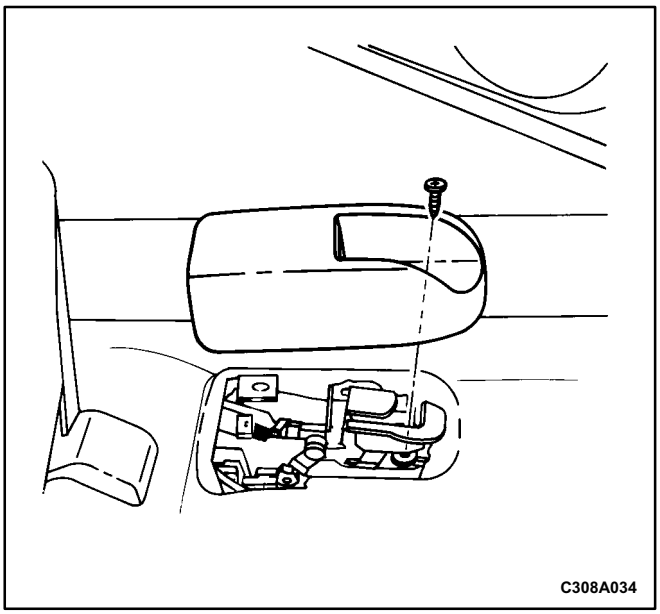

REAR HEATING DUCT

(Left-Hand Drive Shown, Right-Hand Drive Similar)

Removal Procedure

1. Remove the front seat. Refer to *Section 9H, Seats.*
2. If you are working on the driver side of the vehicle, remove the trim that covers the remote release handles for the fuel door and the rear deck lid, then remove the release handles.
3. Remove the front rocker trim plate. Refer to *Section 9G, Front Interior Trim.*

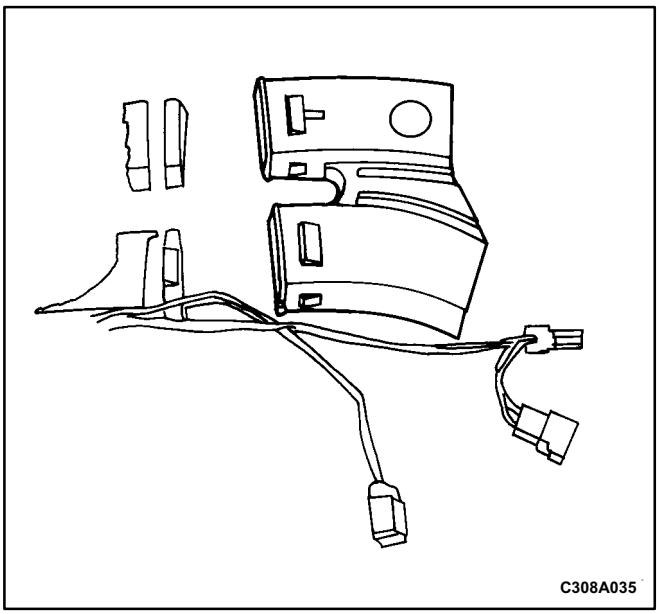

4. Remove the kick panel. Refer to *Section 9G, Interior Trim.*
5. Remove the rear heating duct outlet extension.

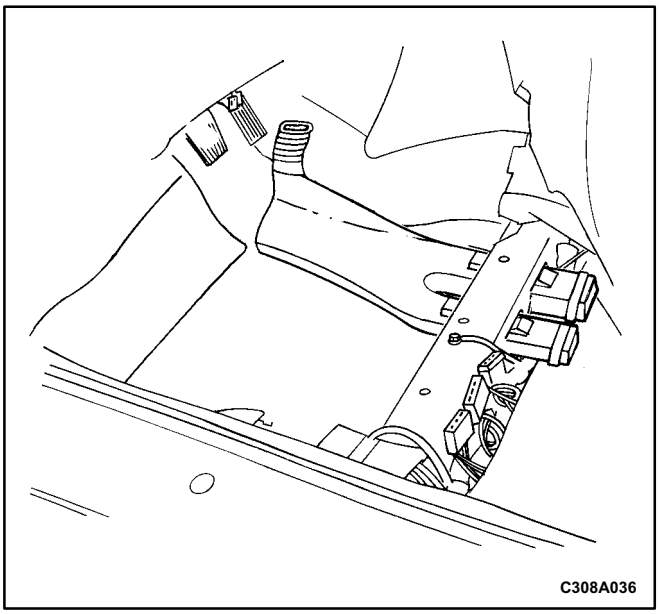

6. Roll the carpet away from the door and the fire wall, toward the center of the vehicle.
7. Roll the carpet pad toward the center of the vehicle. Uncover the entire heating duct, including the coupling to the air distributor case.

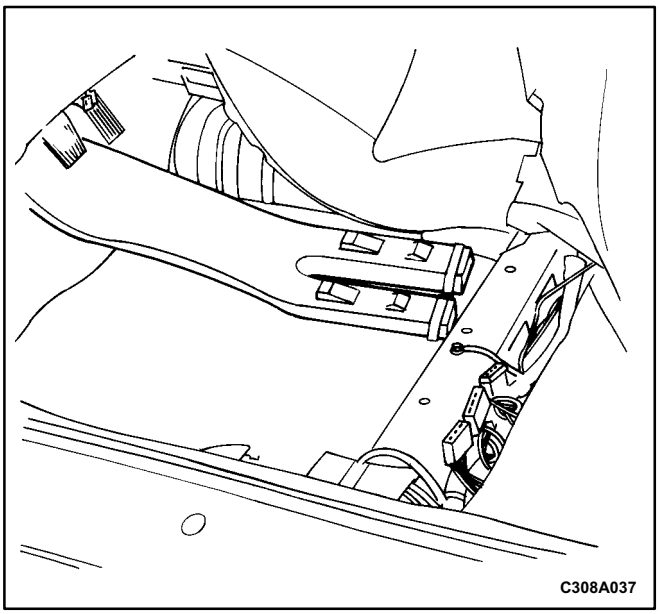

8. Compress and disengage the coupling from the air distributor case.
9. Move the front end of the rear heating duct away from the center of the vehicle.
10. Slide the rear heating duct forward to remove the duct outlets from the openings in the crossmember.
11. Remove the rear heating duct from the vehicle.

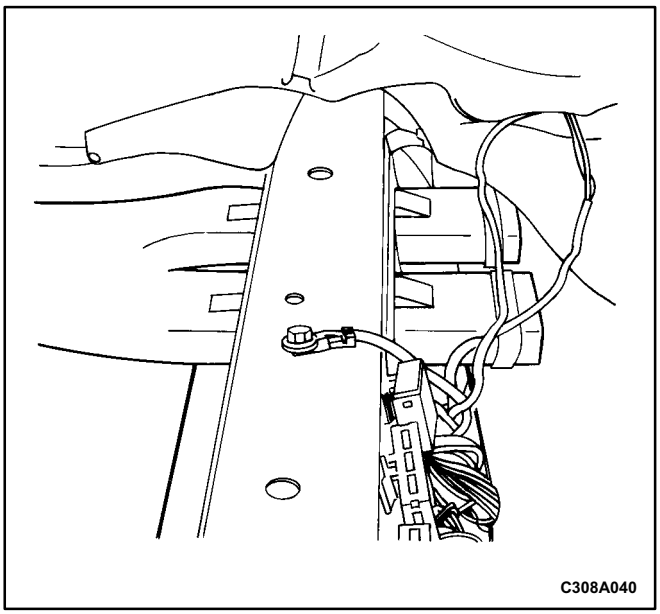

Installation Procedure

1. Insert the rear heating duct outlets into the holes in the crossmember. Push the duct outlets through the holes until they latch into place.

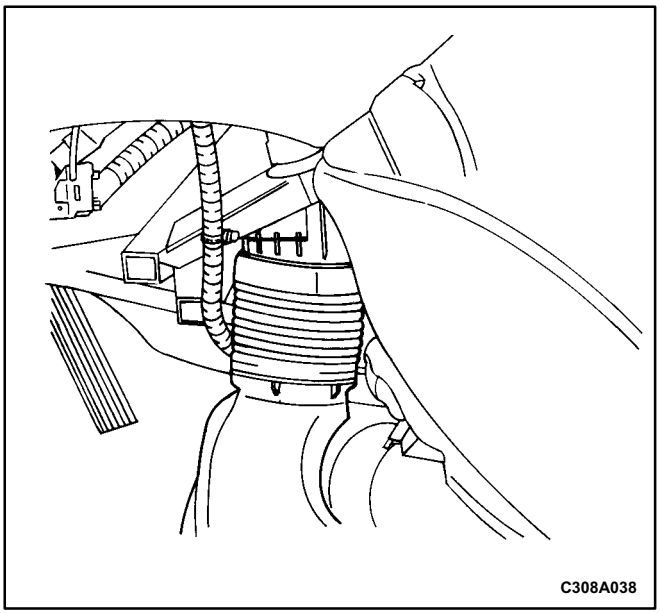

2. Place the air distributor case coupling onto the rear heating duct inlet.
3. Compress the coupling and maneuver the front end of the duct under the outlet of the air distributor case until you can engage the other end of the coupling onto that outlet. The duct should be against the vehicle central tunnel. The coupling should completely surround the air distributor case outlet and the rear heating duct inlet.

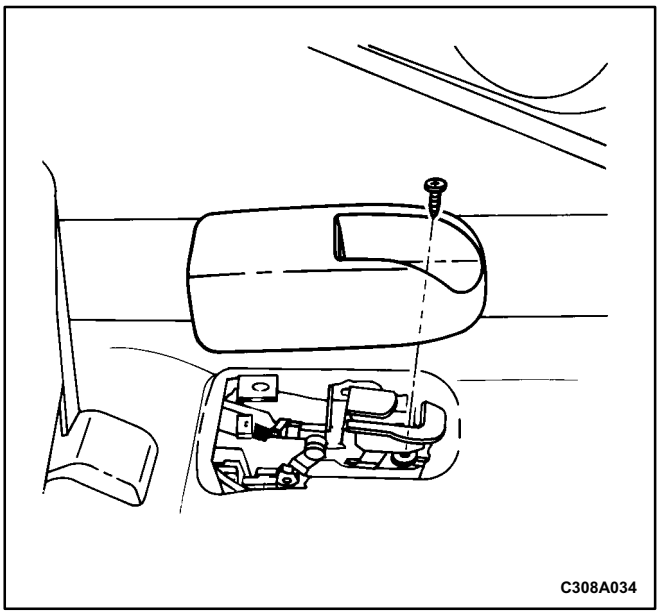

4. Replace the carpet pad over the floor.
5. Replace the carpet over the floor.
6. Pass any electrical connectors through the opening and maneuver the opening over the rear heating duct outlets so they are exposed.
7. Smooth the carpeting and tuck the edges into place at the door opening in the kick panel area.
8. If you are working on the driver side of the vehicle, smooth the carpeting and tuck the edges into place in the area around the remote release handles for the rear deck lid and the fuel door. Then replace the cover over the remote release handles.

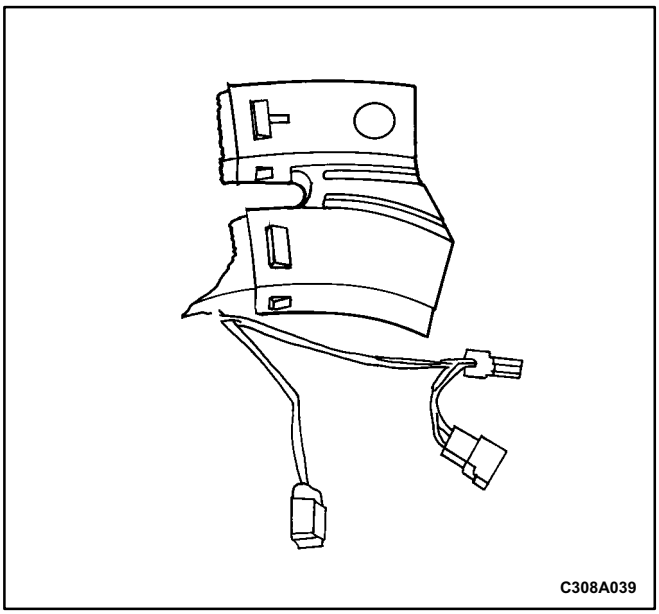

9. Replace the kick panel. Refer to *Section 9G, Interior Trim.*
10. Replace the rocker trim plate. Refer to Section 9G, Interior Trim.
11. Replace the rear heating duct outlet extension.
12. Replace the front seat. Refer to *Section 9H, Seats.*

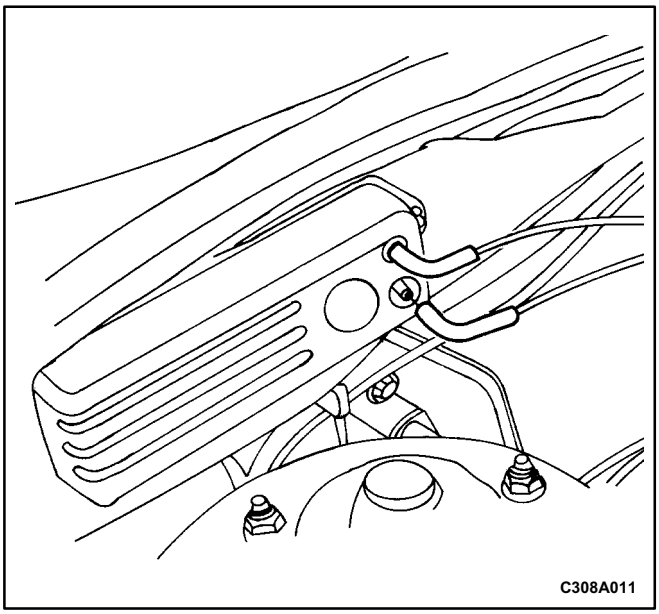

HVAC CONTROL VACUUM TANK

(Left-Hand Drive Shown, Right-Hand Drive Similar)

Removal

1. Disconnect the vacuum hoses that connect to the intake manifold and to the mode control switch.

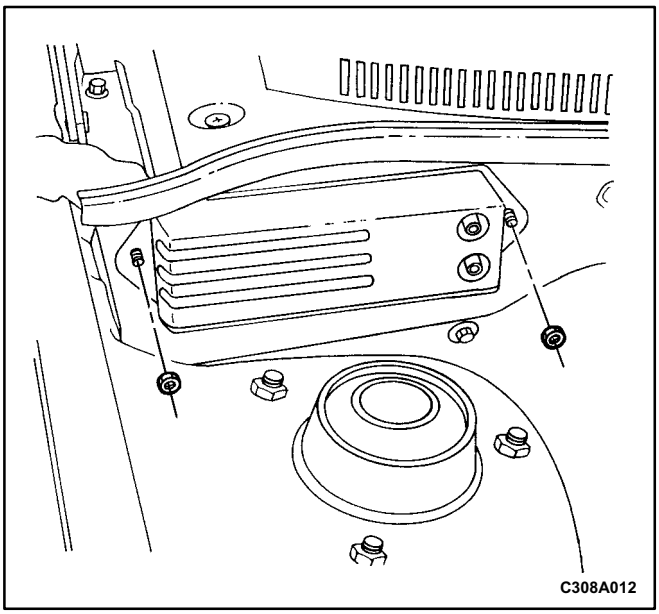

2. Remove the nuts that secure the vacuum tank to the fire wall.
3. Remove the vacuum tank from the fire wall.

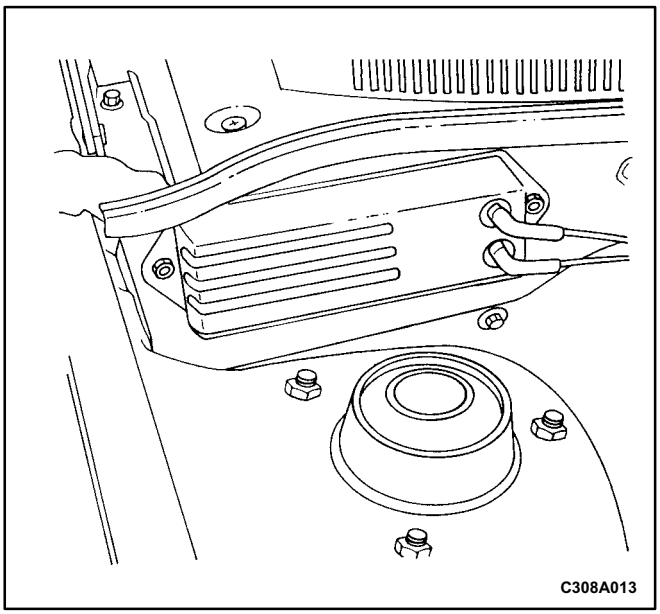

Installation

1. Place the vacuum tank against the fire wall over the mounting studs.
2. Secure the tank with the mounting nuts.

   ### Tighten

   Tighten the vacuum tank mounting nuts to 4 N•m (35 lb•in).
3. Install the vacuum hoses.

Important: The line to the intake manifold goes onto the bottom port, marked **S**. There is a check valve to maintain the vacuum for heater control during temporary losses of vacuum in the intake manifold. If the connections are reversed, the controls will not function properly.

GENERAL DESCRIPTION AND SYSTEM OPERATION

HEATING AND VENTILATION SYSTEMS

The base heater system is designed to provide heating, ventilation, windshield defrosting, and side window defogging on the models equipped with side window defoggers.

The heater and fan assembly blower regulates the airflow from the air inlet for further processing and distribution.

The heater core transfers the heat from the engine coolant to the inlet air.

The temperature door regulates the amount of the air that passes through the heater core. The temperature door also controls the temperature of the air by controlling the mix of the heated air with the ambient air.

The mode door regulates the flow and the distribution of the processed air to the heater ducts and to the defroster ducts.

The console mounted heating and ventilation control panel contains three rotary control knobs and two push control knobs which operate as follows:

Rotary Temperature Control Knob

- Actuates by cable.
- Raises the temperature of the air entering the vehicle by rotation toward the right, or the red portion of the knob.

Rotary Mode Control Knob

- Actuates by vacuum.
- Regulates the air distribution between the windshield, the instrument panel, and the floor vents.

Rotary Blower Control Knob

- Turns ON to operate the blower motor at four speeds.
- Turns OFF to stop the blower.
- Operates completely independently from both the mode control knob and the temperature control knob.
- Changes the fan speed in any mode and at any temperature setting.

Rear Window Defogger Push Knob

- Controls the rear window defogger.
- Turns ON the rear window defogger when the push knob is depressed and the indicator lamp is illuminated.

Fresh Air Control Push Knob

- Operates by vacuum.
- Switches between recirculating the passenger compartment air and bringing outside air into the passenger compartment.
- Is normally in the fresh air mode.
- Illuminates the indicator lamp when in the recirculating mode.

SECTION 7B

MANUAL CONTROL HEATING, VENTILATION, AND AIR CONDITIONING SYSTEM

CAUTION: Disconnect the negative battery cable before removing or installing any electrical unit or when a tool or equipment could easily come in contact with exposed electrical terminals. Disconnecting this cable will help prevent personal injury and damage to the vehicle. The ignition must also be in LOCK unless otherwise noted.

TABLE OF CONTENTS

Specifications 7B-2
A/C System Charging Capacity 7B-2
Fastener Tightening Specifications 7B-2
Special Tools 7B-3
Special Tools Table 7B-3
Schematic and Routing Diagrams 7B-6
A/C System - Typical 7B-6
Manual Control A/C Diagram, SOHC (IEFI-6 ECM) 7B-7
Manual Control A/C Diagram, DOHC (ITMS-6F ECM) 7B-8
Diagnosis 7B-9
General Diagnosis 7B-9
Testing the Refrigerant System 7B-9
Insufficient Cooling „Quick Check" Procedure 7B-9
A/C Performance Test 7B-10
Pressure Temperature Relationship of R 134a 7B-11
Leak Testing the Refrigerant System 7B-12
V5 System Air Conditioning Diagnosis - Insufficient Cooling 7B-13
Insufficient Cooling Diagnosis 7B-13
Symptom Diagnosis 7B-17
Pressure Test Chart (R-134a System) 7B-17
Low and High Side Pressure Relationship Chart 7B-19
Maintenance and Repair 7B-20
On-Vehicle Service 7B-20
General A/C System Service Procedures 7B-20
O-Ring Replacement 7B-20
Handling Refrigerant 7B-20
Handling of Refrigerant Lines and Fittings 7B-20
Maintaining Chemical Stability in the Refrigeration System 7B-21
Discharging, Adding Oil, Evacuating, and Charging Procedures for A/C System 7B-21
Serviceable Components 7B-23
A/C Pressure Transducer 7B-24
A/C Compressor Relay 7B-25
Air Filter 7B-25
A/C Expansion Valve 7B-26
Heater/Air Distributor Case Assembly 7B-28
A/C High Pressure Pipe Line 7B-29
Heater Core 7B-31
Evaporator Core 7B-31
A/C Suction Hose Assembly 7B-33
A/C Discharge Hose - Compressor to Condenser 7B-34
Receiver Dryer 7B-36
Compressor 7B-37
Condenser 7B-38
Unit Repair 7B-41
Component Locator 7B-41
V5 Compressor 7B-41
V5 Air Conditioning Compressor Overhaul 7B-42
Clutch Plate and Hub Assembly 7B-42
Clutch Rotor and Bearing 7B-44
Clutch Coil 7B-47
Shaft Seal Replacement 7B-49
Pressure Relief Valve 7B-51
Control Valve Assembly 7B-52
Rear Head, Gasket, Valve Plate, Reed Plate, and O-Ring 7B-53
Cylinder to Front Head O-Ring 7B-55
Leak Testing (External) 7B-57

General Description and System Operation 7B-58
General Information 7B-58
The V5 A/C System 7B-58
A/C System Differences 7B-58
System Components - Functional 7B-58
System Components - Control 7B-59
V5 Compressor - General Description 7B-60
V5 Compressor - Description of Operation 7B-60

SPECIFICATIONS

A/C SYSTEM CHARGING CAPACITY

Application	Description
R134a System - Left Hand Drive - Right Hand Drive	 750 - 20 g 850 - 20 g
Refrigerant Oil in A/C System	Synthetic PAG 265 ml

FASTENER TIGHTENING SPECIFICATIONS

Application	N•m	Lb•Ft	Lb•In
Air Cleaner Housing Assembly Retaining Bolts	12	-	106
Band Clamp Bolt	5	-	44
Clamp Bolts	4	-	35
Clutch Plate and Hub Assembly Retaining Nut	17	13	-
Discharge Hose Connecting Block to Compressor Retaining Nut	33	24	-
Discharge Hose Connecting Block to Condenser Retaining Nut	16	12	-
Expansion Valve Bolts	10	-	89
Front Compressor to Bracket Mounting Bolts	35	26	-
High Pressure Pipe to Evaporator Flange Connecting Block Nut	10	-	89
High Pressure Pipe to Receiver Dryer Connecting Block Nut	10	-	89
Liquid Evaporator Pipe Clamp Bolt	4	-	35
Pressure Relief Valve	16	12	-
Pressure Transducer	10	-	89
Rear Compressor to Bracket Mounting Bolts	20	15	-
Receiver Dryer to Condenser Pipe Nut	10	-	89
Suction Hose Clamp Bolt	10	-	89
Suction Hose Connecting Block Retaining Nuts	10	-	89
Suction Hose Support Clamp Retaining Bolt	5	-	44
Suction Hose Support Clamp Retaining Nut	5	-	44
Through Bolts	10	-	89
Upper Condenser Mount Nuts	4	-	35
Vacuum Tank to Fire Wall Nuts	4	-	35

SPECIAL TOOLS

SPECIAL TOOLS TABLE

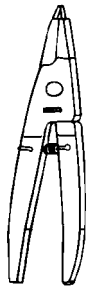 A108B078	**J-5403** **Snap Ring Pliers**
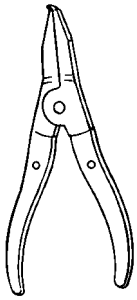 A108B079	**J-6083** **Snap Ring Pliers**
A108B080	**J-8092** **Driver Handle**
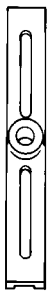 A108B081	**J-8433-1** **Puller Crossbar**
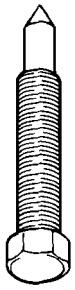 A108B082	**J-8433-3** **Forcing Screw**
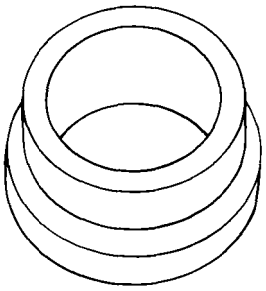 A108B084	**J-9398-A** **Bearing Remover**
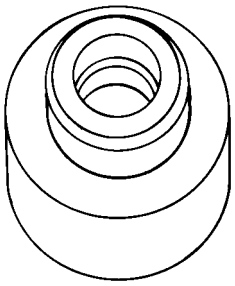 A108B085	**J-9481** **Bearing Installer**
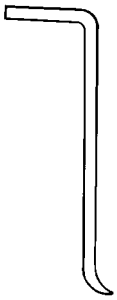 A108B086	**J-9553-1** **O-Ring Remover**

SPECIAL TOOLS TABLE (Cont'd)

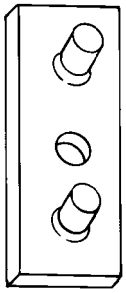 A108B087	**J-9625-A** **Pressure Testing Connector**
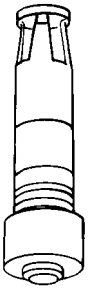 A108B088	**J-23128-A** **Seal Seat Remover and Installer**
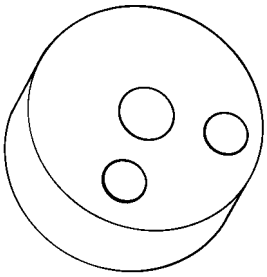 A108B089	**J-35372** **Support Block**
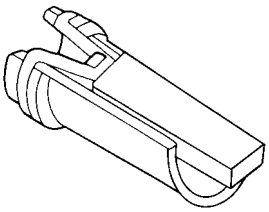 A108B090	**J-33011** **ORing Installer**
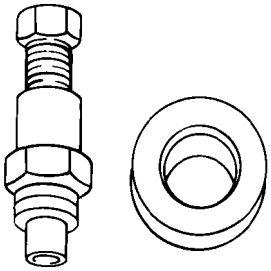 A108B091	**J-33013-B** **Hub and Drive Plate Remover and Installer**

A108B092	**J-34993** **Cylinder Alignment Rods**
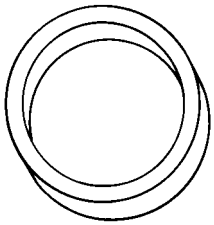 A108B093	**J-33017** **Pulley Rotor and Bearing Installer**
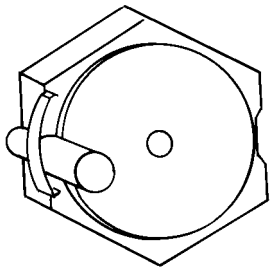 A108B094	**J-33019** **Bearing Staking Tool Set** **Includes:** **J-33019-1** **Bearing Staking Guide** **J-33019-2** **Bearing Staking Pin**

SPECIAL TOOLS TABLE (Cont'd)

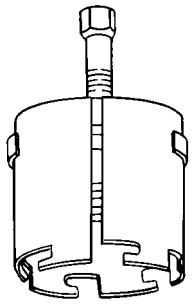 A108B095	**J-33020 Pulley Puller**
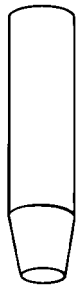 A108B096	**J-34614 Shaft Seal Protector**
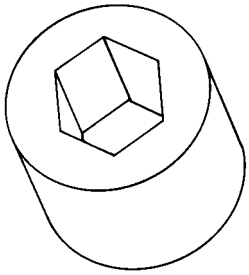 A108B097	**J-33022 Shaft Nut Socket**
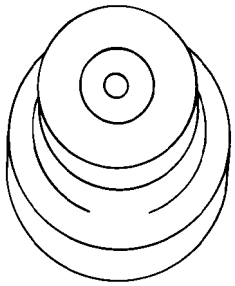 A108B098	**J-33023-A Puller Pilot**
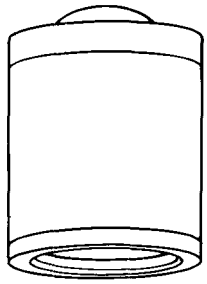 A108B099	**J-33024 Clutch Coil Installer Adapter**
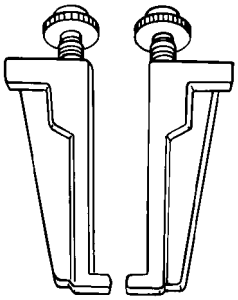 A108B100	**J-33025 Clutch Coil Puller Legs**
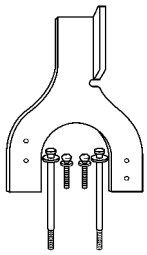 A108B101	**J-34992 Compressor Holding Fixture**
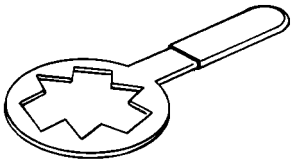 A108B102	**J-33027 Clutch Hub Holding Tool**

SCHEMATIC AND ROUTING DIAGRAMS

A/C SYSTEM - TYPICAL

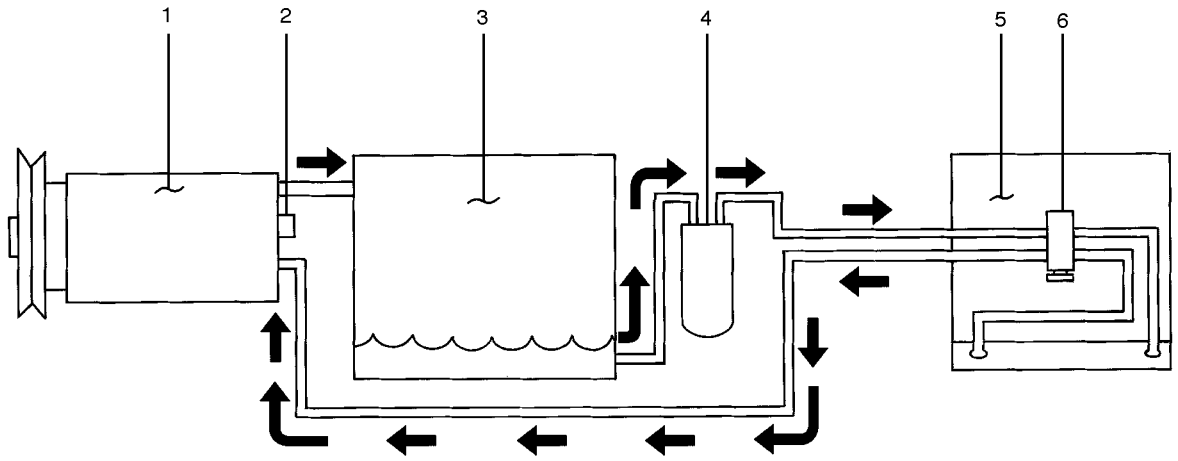

1 Compressor
2 Pressure Relief Valve
3 Condenser
4 Receiver Dryer
5 Evaporator
6 Expansion Valve

MANUAL CONTROL A/C DIAGRAM, SOHC (IEFI6 ECM)

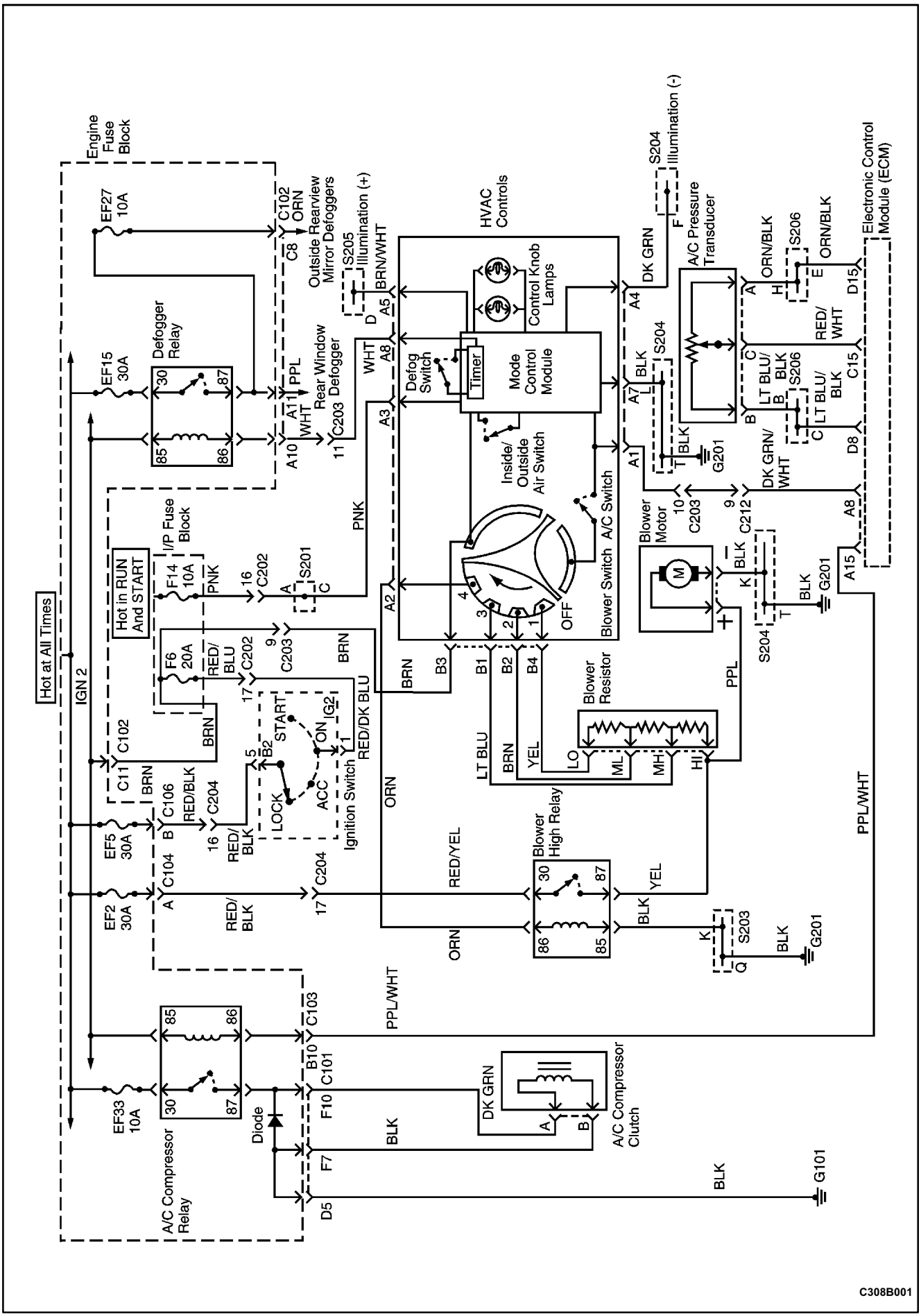

C308B001

MANUAL CONTROL A/C DIAGRAM, DOHC (ITMS6F ECM)

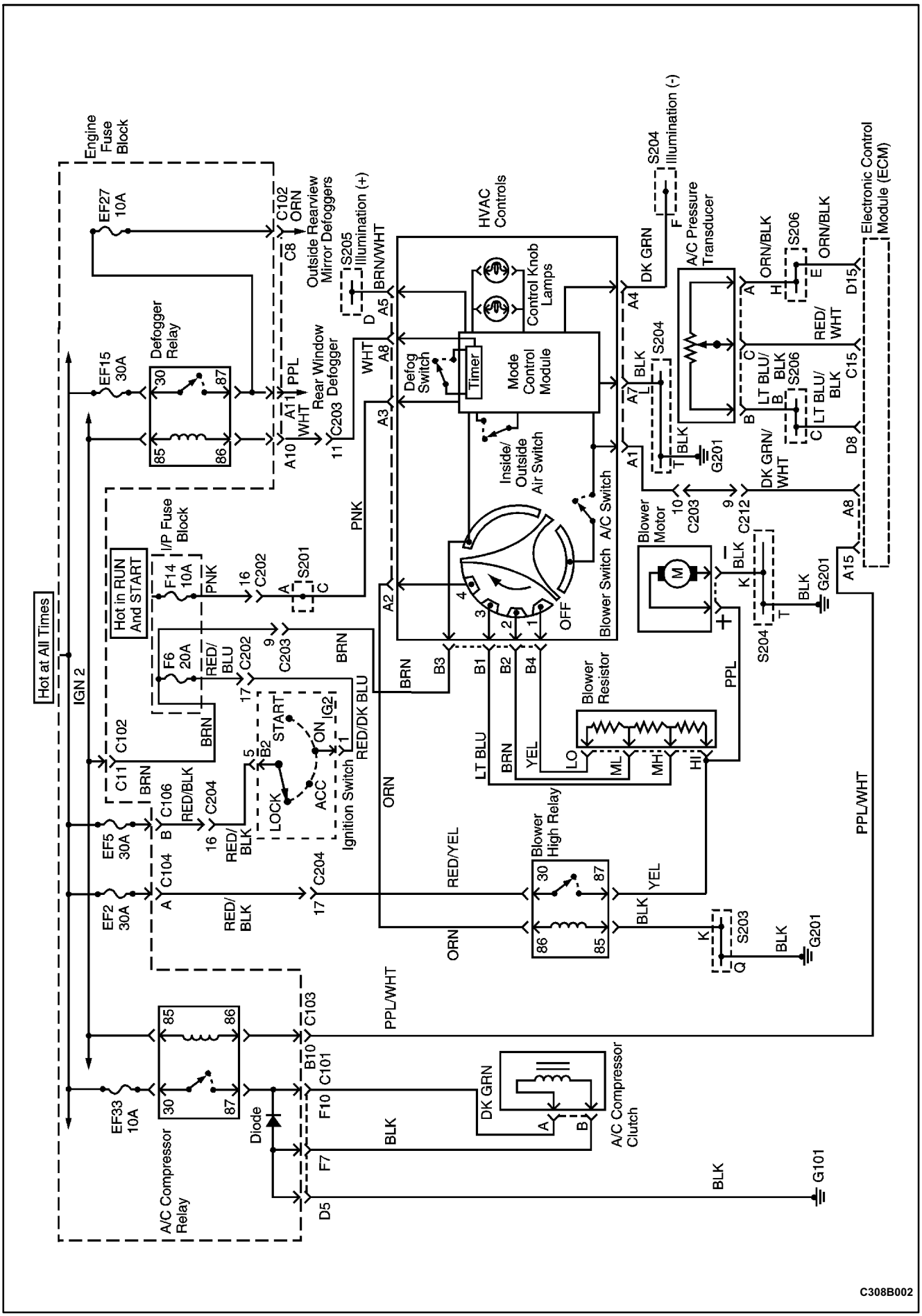

DIAGNOSIS

GENERAL DIAGNOSIS

TESTING THE REFRIGERANT SYSTEM

If you suspect a problem in the refrigerant system, check for the following conditions:

1. Check the outer surfaces of the radiator and the condenser cores to be sure that the airflow is not blocked by dirt, leaves, or other foreign material. Check between the condenser and the radiator, as well as all outer surfaces.
2. Check for restrictions or kinks in the condenser core, the hoses, and the tubes.
3. Check the operation of the blower fan.
4. Check all the air ducts for leaks or restrictions. Low airflow rate may indicate a restricted evaporator core.
5. Check for slippage of the compressor clutch.
6. Check the drive belt tension.

INSUFFICIENT COOLING „QUICK CHECK" PROCEDURE

Perform the following „hand feel" procedure to get a quick idea of whether the A/C system has the proper charge of Refrigerant 134a. The air temperature must be above 21°C (70°F) for most models.

1. Warm up the engine. Run the engine at idle.
2. Open the hood and all the doors.
3. Turn the A/C switch ON.
4. Set the temperature control to the full cold position.
5. Set the blower speed switch on the maximum speed setting.
6. „Hand feel" the temperature of the evaporator outlet pipe. The pipe should be cold.
7. Check for other problems. Refer to „Testing the Refrigerant System" in this section.
8. Leak check the system. Refer to „Leak Testing the Refrigerant System" in this section. If you find a leak, discharge the system and repair the leak as required. After completing the repair, evacuate the system and charge it.
9. If there is no leak, refer to „Insufficient Cooling Diagnosis" in this section.

A/C PERFORMANCE TEST

RELATIVE HUMIDITY (%)	AMBIENT AIR TEMPERATURE °C °F	LOW SIDE PRESSURE kPa psig	ENGINE SPEED (RPM)	CENTER DUCT AIR TEMPERATURE °C °F	HIGH SIDE PRESSURE kPa psig
20	21 70 27 80 32 90 38 100	200 29 200 29 207 30 214 31	2000	4 40 7 45 9 48 14 57	1034 150 1310 190 1689 245 2103 305
30	21 70 27 80 32 90 38 100	200 29 207 30 214 31 221 32	2000	6 42 8 47 11 51 16 61	1034 150 1413 205 1827 265 2241 325
40	21 70 27 80 32 90 38 100	200 29 207 30 221 32 269 39	2000	7 45 9 48 13 55 18 65	1138 165 1482 215 1931 280 2379 345
50	21 70 27 80 32 90 38 100	207 30 221 32 234 34 276 40	2000	8 47 12 53 15 59 21 69	1241 180 1620 235 2034 295 2413 350
60	21 70 27 80 32 90 38 100	207 30 228 33 248 36 296 43	2000	9 48 13 56 17 63 23 73	1241 180 1655 240 2068 300 2482 360
70	21 70 27 80 32 90 38 100	207 30 234 34 262 38 303 44	2000	10 50 14 58 18 65 24 75	1276 185 1689 245 2103 305 2517 365
80	21 70 27 80 32 90	207 30 234 34 269 39	2000	10 50 15 59 19 67	1310 190 1724 250 2137 310
90	21 70 27 80 32 90	207 30 248 36 290 42	2000	10 50 17 62 22 71	1379 200 1827 265 2275 330

PRESSURE-TEMPERATURE RELATIONSHIP OF R-134a

Temperature °C (°F)*	Pressure kPa (psig)*	Temperature °C (°F)*	Pressure kPa (psig)*
-8 (17.6)	113.1 (16.4)	9 (48.2)	296.2 (43.0)
-7 (19.4)	121.5 (17.6)	10 (50.0)	309.6 (44.9)
-6 (21.2)	130.2 (18.9)	15 (59.0)	383.7 (55.7)
-5 (23.0)	139.1 (20.2)	20 (68.0)	467.7 (67.8)
-4 (24.8)	148.4 (21.5)	25 (77.0)	567.5 (82.3)
-3 (26.6)	157.9 (22.9)	30 (86.0)	667.8 (96.9)
-2 (28.4)	167.6 (24.3)	35 (95.0)	785.6 (113.9)
-1 (30.2)	177.8 (25.8)	40 (104.0)	916.4 (133.0)
0 (32.0)	188.2 (27.3)	45 (113.0)	1 062.2 (154.0)
1 (33.8)	198.8 (28.8)	50 (122.0)	1 222.1 (177.2)
2 (35.6)	209.9 (30.4)	55 (131.0)	1 398.2 (202.8)
3 (37.4)	221.2 (32.1)	60 (140.0)	1 589.6 (230.5)
4 (39.2)	232.9 (33.8)	65 (149.0)	1 799.0 (260.9)
5 (41.0)	245.0 (35.5)	70 (158.0)	2 026.6 (293.9)
6 (42.8)	257.4 (37.3)	75 (167.0)	2 272.2 (329.5)
7 (44.6)	269.8 (39.1)	80 (176.0)	2 544.0 (369.0)
8 (46.4)	282.9 (41.0)	-	-

* All calculated values are rounded to one decimal place.

Evaporator Range: From -7 to 7°C (19.4 to 44.6°F), the temperatures represent the gas temperatures inside the coil and not on the coil surfaces. Add 2 to 6°C (4 to 11°F) to the coil and air-off temperatures.

Condenser Range: From 45 to 70°C (113° to 158°F), the temperatures are not ambient. Add 19 to 22°C (34 to 40°F) to the ambient temperatures for proper heat transfer. Then refer to the pressure chart.

Example:	32°C	(90°F)	Ambient temperature
	+ 22°C	+ (40°F)	
	54°C	(130°F)	Condenser temperature, which yields 1 379 kPa (200 psig), based on 50 km/h (31 mph) airflow.

LEAK TESTING THE REFRIGERANT SYSTEM

Test for leaks whenever you suspect a refrigerant leak in the system. You should also test for leaks whenever you perform a service operation which results in disturbing the lines or the connections. Leaks are commonly found at the refrigerant fittings or at the connections. Leaks are commonly caused by the following problems:

- Improper torque.
- Damaged O-ring seals.
- Dirt or lint on the O-ring seals.

Liquid Leak Detectors

Use a liquid leak detector solution on locations such as fittings. Apply the solution to the area in question with the swab that is supplied with the solution. Look for bubbles to appear. This will indicate the existence and the location of any leak.

For areas where this is not practical, such as sections of the evaporator and the condenser, an electronic leak detector is more useful.

Electronic Leak Detectors

Follow the manufacturer's instructions for calibration, operation, and maintenance of an electronic leak detector. Battery condition is especially important to the accuracy of a portable model. Set the detector to R134a before beginning the test.

Notice: Electronic leak detectors are sensitive to windshield washing solutions, solvents and cleaners, and certain vehicle adhesives. Surfaces must be clean to prevent false readings. Make sure that all surfaces are dry to prevent damage to the detector.

General Testing Instructions

1. Follow the entire path of the refrigerant system.
2. Completely circle each joint at 25 to 50 mm (1 to 2 inches) per second.
3. Hold the probe tip within 6 mm (1/4 inch) of the surface.
4. Do not block the air intake.
5. The audible tone changes from 1 to 2 clicks per second into a solid alarm if there is a leak. Adjust the balance control to maintain 1 to 2 clicks per second.
6. Test all of the following areas, even after one leak has been confirmed:

- Evaporator inlet and outlet.
- Receiver/drier inlet and outlet.
- Condenser inlet and outlet.
- Brazed and welded areas.
- Damaged areas.
- Hose couplings.
- Compressor rear head.
- All fittings and joints.

Testing Service Ports/Access Valves

The sealing caps provide protection for the service ports. Make sure that these caps are not missing or loose. Always use the correct cap for each port.

Testing the Evaporator Core

Leaks in the evaporator core are difficult to find. Test the evaporator core using the following procedure:

1. Run the blower fan at the maximum speed setting for at least 15 minutes.
2. Turn the blower OFF.
3. Wait for 10 minutes.
4. Remove the blower motor resistor. Refer to *Section 7A, Heating and Ventilation System*.
5. Insert the leak detector probe as closely as possible to the evaporator core. The detector will indicate a leak with a solid alarm.
6. Use a flashlight to search for refrigerant oil on the core surface.

Testing the Compressor Shaft Seal

1. Blow shop air behind and in front of the compressor clutch/pulley for at least 15 seconds.
2. Wait 1 to 2 minutes.
3. Probe the area in front of the pulley. If the detector emits a solid alarm, there is a leak.

V5 SYSTEM AIR CONDITIONING DIAGNOSIS

INSUFFICIENT COOLING DIAGNOSIS

Test Description

The numbers below refer to steps on the diagnostic table.

13. See the Important below.

Important: Perform this test under garage conditions with the air temperature at 21-32°C (70-90°F), and no sun load. Follow this test carefully for accurate results.

32. See the Important below.

Important: Perform this test exactly as described to obtain accurate results.

Insufficient Cooling Diagnosis

Step	Action	Value(s)	Yes	No
1	Record the customer's complaint. Can you verify the customer's complaint?	-	Go to *Step 2*	System OK
2	1. Check the A/C fuse. 2. Check the blower fan operation. 3. Check the engine cooling fan operation. 4. Check the A/C compressor belt. 5. Check the A/C condenser for restricted airflow. 6. Check the clutch coil connection. 7. Repair or replace any components as needed. 8. Check the discharge air temperature with the A/C turned ON. Is the discharge air temperature normal?	At least 7°C (12°F) below ambient air temperature	System OK	Go to *Step 3*
3	1. Turn the ignition switch to LOCK. 2. Connect the high and the lowpressure gauges. Are both pressures within the value specified?	69-345 kPa (10-50 psi)	Go to *Step 4*	Go to *Step 5*
4	1. Check the A/C system for leaks. 2. Repair any refrigerant leaks, as needed. 3. Recover, evacuate, and recharge the A/C system. 4. Observe the two pressure gauges. Are both pressures above the value specified?	345 kPa (50 psi)	Go to *Step 7*	-
5	Observe the two pressure gauges. Are both pressures below the value specified?	69 kPa (10 psi)	Go to *Step 6*	Go to *Step 7*
6	1. Add 0.45 kg (1 pound) of refrigerant R 134a. 2. Check the A/C system for leaks. 3. Repair any refrigerant leaks, as needed. 4. Recover, evacuate, and recharge the A/C system. 5. Observe the two pressure gauges. Are both pressures above the value specified?	345 kPa (50 psi)	Go to *Step 7*	-
7	1. Start the engine and allow it to run at idle. 2. Set the A/C controls to the following positions: ● The A/C switch to ON. ● The fresh air control switch to fresh air (indicator lamp OFF). ● The blower motor to 4. ● The temperature to full cold. Does the A/C compressor clutch engage?	-	Go to *Step 8*	Go to *Step 10*

Insufficient Cooling Diagnosis (Cont'd)

Step	Action	Value(s)	Yes	No
8	1. Check for a knocking noise from the A/C compressor. 2. Cycle the A/C compressor ON and OFF in order to verify the source of the noise. Do you hear a loud knocking noise?	-	Go to *Step 9*	Go to *Step 13*
9	1. Recover the A/C system refrigerant. 2. Replace the A/C compressor. 3. Evacuate and recharge the A/C system. 4. Check the A/C system for leaks. Is the compressor running normally?	-	Go to *Step 13*	-
10	1. Turn the ignition switch to LOCK. 2. Disconnect the A/C compressor clutch coil connector. 3. Connect a jumper wire from ground to one A/C compressor clutch coil terminal. 4. Connect a fused jumper wire from the positive battery terminal to the other A/C compressor clutch coil terminal. Does the A/C clutch engage?	-	Go to *Step 11*	Go to *Step 12*
11	Repair the electrical circuit to the A/C compressor clutch coil. Does the A/C clutch engage?	-	Go to *Step 8*	-
12	Replace the A/C compressor clutch coil. Does the A/C clutch engage?	-	Go to *Step 8*	-
13	1. Close all of the vehicle's windows and doors. 2. Set the A/C controls to the following positions: ● The A/C switch to ON. ● The fresh air control switch to fresh air. ● The blower motor to 4. ● The temperature to full cold. 3. Start the engine and allow it to run at idle for 5 minutes. 4. Feel the evaporator inlet and outlet pipes. Is there a noticeable difference in the temperature of the evaporator inlet and outlet pipes?	-	Go to *Step 15*	Go to *Step 14*
14	1. Turn the ignition switch to LOCK. 2. Recover the A/C system refrigerant. 3. Examine the high pressure pipe for an obstruction. 4. Examine the expansion valve for an obstruction or a malfunction. 5. Repair the obstruction or replace the expansion valve as needed. 6. Evacuate and recharge the A/C system. 7. Check the A/C system for leaks. 8. Note the discharge air temperature with the A/C ON. Is the discharge temperature normal?	At least 7°C (12°F) below ambient air temperature	Go to *Step 15*	Go to *Step 13*

Insufficient Cooling Diagnosis (Cont'd)

Step	Action	Value(s)	Yes	No
15	1. Record the low and the high side pressures after the A/C system has been operating for 5 minutes or more with the engine cooling fan ON. 2. Locate the intersection of the low and the high side pressures. Refer to „Low and High Side Pressure Relationship Chart" in this section. Do the low and the high side pressures intersect in the white area of the chart?	-	System OK	Go to *Step 16*
16	Check the high-and the low-side pressures. Do the low-and the high-side pressures intersect in the gray area of the chart?	-	Go to *Step 17*	Go to *Step 20*
17	Feel the liquid pipe between the condenser and the expansion valve. Is the pipe cold?	-	Go to *Step 18*	Go to *Step 19*
18	1. Examine the condenser for any restriction of the airflow. 2. Check the cooling fans for proper operation. 3. Remove the restriction or repair the fans, as required. Is the pipe temperature normal now?	At least 7°C (12°F) below ambient air temperature	Go to *Step 13*	-
19	1. Recover, evacuate, and recharge the A/C system. 2. Check the A/C system for leaks. Is the system free from leaks?	-	Go to *Step 13*	-
20	Observe the readings on the pressure gauges. Are the A/C compressor high-and the low-side pressures within the specified value of each other?	207 kPa (30 psi)	Go to *Step 21*	Go to *Step 26*
21	1. Run the engine at 3,000 rpm. 2. Set the A/C controls to the following positions: ● The A/C switch to ON. ● The fresh air control switch to fresh air. ● The blower motor to 4. ● The temperature to full cold. 3. Close all of the vehicle's windows and doors. 4. Turn the A/C switch ON and OFF every 20 seconds for 3 minutes. Are the A/C compressor high-and the low-side pressures within the specified value of each other?	207 kPa (30 psi)	Go to *Step 22*	Go to *Step 13*
22	Observe the pressure rise on both gauges and the temperatures of both the compressor suction pipe and the discharge pipe. Is the pressure rise on both gauges slow and the suction pipe warm with the discharge pipe very hot?	-	Go to *Step 25*	Go to *Step 23*
23	1. Turn the ignition switch to LOCK. 2. Make sure the compressor clutch is disengaged. 3. Attempt to turn the clutch driver (not the pulley). Can you turn the clutch driver freely by hand?	-	Go to *Step 25*	Go to *Step 24*
24	1. Start the engine. 2. Observe the low-side pressure gauge while running the engine between 3,000 and 3,800 rpm. Does the low-side pressure rise rapidly?	-	Go to *Step 32*	Go to *Step 25*

Insufficient Cooling Diagnosis (Cont'd)

Step	Action	Value(s)	Yes	No
25	1. Recover the A/C system refrigerant. 2. Replace the A/C compressor. 3. Evacuate and recharge the A/C system. Is the compressor functioning normally?	-	Go to *Step 13*	-
26	Check the low-side pressure. Is the low-side pressure within the specified value?	172-241 kPa (27-38 psi)	Go to *Step 27*	Go to *Step 32*
27	Feel the high-side pipe leading up to the expansion valve connecting block. Is the pipe cold before the connecting block?	-	Go to *Step 28*	Go to *Step 29*
28	1. Check for a restriction in the high-side pipe before the expansion valve. 2. Repair or replace the high-side pipe. Is the pipe performing normally?	-	Go to *Step 13*	-
29	Add the specified amount of refrigerant to the A/C system. Does the cooling performance improve?	0.40 kg (14 oz)	Go to *Step 30*	Go to *Step 31*
30	1. Check the A/C system for leaks. 2. Repair any refrigerant leaks, as needed. 3. Evacuate and recharge the A/C system. 4. Check the A/C system for leaks. Is the system free from leaks?	-	Go to *Step 13*	-
31	1. Recover the refrigerant. 2. Check the expansion valve for obstructions. 3. Repair or replace the expansion valve, as required. 4. Evacuate and recharge the system. 5. Check the A/C system for leaks. Is the system free from leaks?	-	Go to *Step 13*	-
32	1. Run the engine for 5 minutes at 2,000 rpm. 2. Set the A/C controls to the following positions: ● The A/C switch to the ON position. ● The fresh air control switch to recirculate (indicator lamp ON). ● The blower motor to 1. ● The temperature to full cold. 3. Close all of the vehicle's windows and doors. 4. Open the vehicle hood. Is the low-side pressure within the specified value?	172-241 kPa (25-35 psi)	Go to *Step 13*	Go to *Step 33*
33	1. Recover the A/C system refrigerant. 2. Replace the A/C compressor control valve. 3. Evacuate and recharge the A/C system. 4. Check the A/C system for leaks. Is the system free from leaks?	-	Go to *Step 13*	-

SYMPTOM DIAGNOSIS

PRESSURE TEST CHART (R-134a SYSTEM)

TEST RESULTS	RELATED SYMPTOMS	PROBABLE CAUSE	REMEDY
Discharge (high) pressure abnormally high	After stopping the compressor, the pressure drops about 299 kPa (28 psi) quickly, then falls gradually.	There is air in the system.	Recover, evacuate and recharge the system with the specified amount of refrigerant.
	The condenser is excessively hot.	There is excessive refrigerant in the system.	Recover, evacuate and recharge the system with the specified amount of refrigerant.
	Reduced or no air flow through the condenser.	The condenser or the radiator fins are clogged.	Clean the condenser or the radiator fins.
		The condenser or the radiator fan is not working properly.	● Check the voltage and the fan rpm. ● Check the fan direction.
	Line to the condenser is excessively hot.	Restricted flow of refrigerant in the system	Locate and repair the restriction.
Discharge pressure abnormally low	The condenser is not hot.	Insufficient refrigerant in the system.	● Check the system for a leak. ● Charge the system.
	High and low pressures are balanced soon after stopping the compressor. Low side pressure is higher than normal.	Faulty compressor pressure relief valve.	Repair or replace the compressor.
		Faulty compressor seal.	
	The outlet of the expansion valve is not frosted, low pressure gauge indicates vacuum.	Faulty expansion valve.	Replace the expansion valve.
		Moisture in the system.	Recover, evacuate, and recharge the system.
Suction (low) pressure abnormally low	Condenser is not hot.	Insufficient refrigerant in the system.	Repair the leaks. Recover, evacuate, and recharge the system.
	The expansion valve is not frosted and the low pressure line is not cold. Low pressure gauge indicates a vacuum.	Frozen expansion valve.	Replace the expansion valve.
		Faulty expansion valve.	
	Discharge temperature is low and the air flow from the vents is restricted.	The evaporator is frozen.	Clear the restricted evaporator case drain.
	The expansion valve is frosted.	The expansion valve is clogged.	Clean or replace the expansion valve.
	The receiver/drier outlet is cool and the inlet is warm.	The receiver/drier is clogged.	Replace the receiver/drier.
Suction pressure abnormally high	Low pressure hose and check joint are cooler than the temperature around the evaporator.	The expansion valve is opened for too long.	Replace the expansion valve.
		A capillary tube is loose.	

Pressure Test Chart (R134a System) (Cont'd)

TEST RESULTS	RELATED SYMPTOMS	PROBABLE CAUSE	REMEDY
Suction pressure abnormally high	Suction pressure is lowered when the condenser is cooled by water.	There is excessive refrigerant in the system.	Recover, evacuate, and recharge the system.
	High and low pressure are equalized as soon as the compressor is stopped and both gauges fluctuate while the compressor is running.	A gasket is faulty.	Repair or replace the compressor.
		The high pressure valve is faulty.	
		Foreign particles are stuck in the high pressure valve.	
Suction and discharge pressure abnormally high	Reduced airflow through the condenser.	The condenser or the radiator fins are clogged.	Clean the condenser and the radiator.
		The radiator cooling fans are not working properly.	● Check the voltage and the radiator cooling fan rpm. ● Check the fan direction.
	Condenser is excessively hot.	There is excessive refrigerant in the system.	Recover, evacuate, and recharge the system.
Suction and discharge pressure abnormally low	Low pressure hose and metal end areas are cooler than the evaporator.	Clogged or kinked low pressure hose.	Repair or replace the low pressure hose.
	Temperature around the expansion valve is low compared to that around the receiver/drier.	The high pressure line is clogged.	Repair or replace the high pressure line.
Refrigerant leaks	The compressor clutch is dirty.	The compressor shaft seal is leaking.	Repair or replace the compressor.
	The compressor bolts are dirty.	Leaking around a compressor housing bolt.	Tighten the bolt(s) or replace the compressor.
	The compressor gasket is wet with oil.	The compressor gasket is leaking.	Repair or replace the compressor.

LOW AND HIGH SIDE PRESSURE RELATIONSHIP CHART

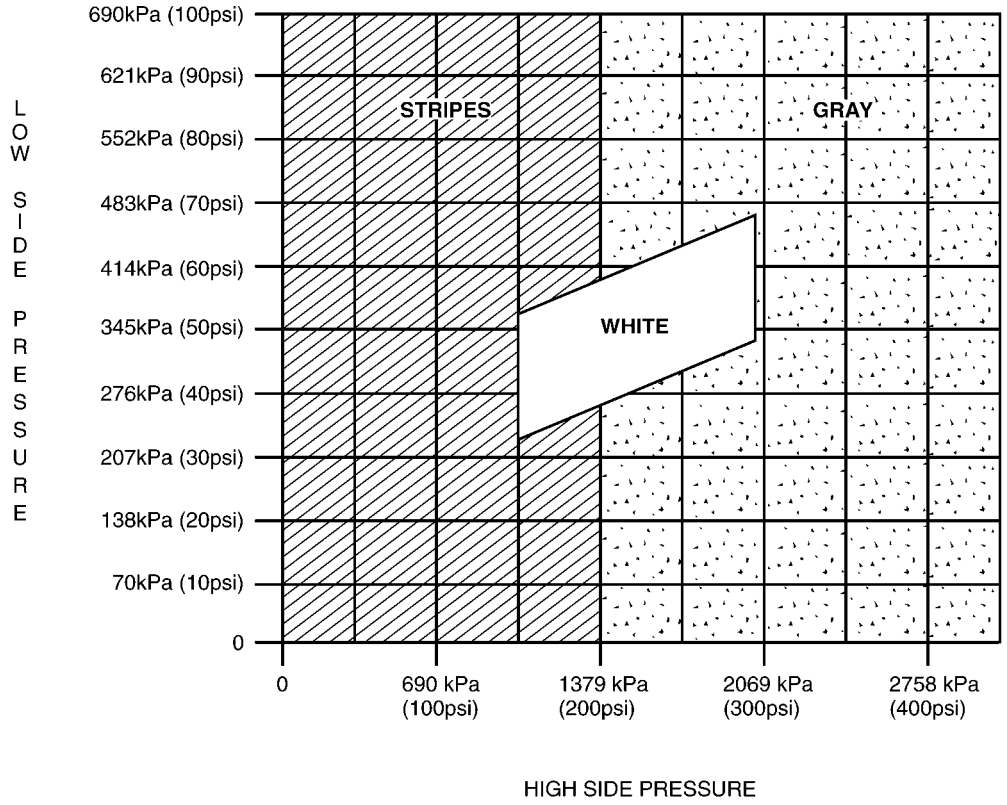

A108B110

MAINTENANCE AND REPAIR

ON-VEHICLE SERVICE

GENERAL A/C SYSTEM SERVICE PROCEDURES

ORING REPLACEMENT

Important: Even though O-rings may look identical, it is extremely important that only recommended service replacement air conditioning O-rings be used or excessive leakage of refrigerant may occur.

Important: Always slip the O-ring onto the flange tube to ensure proper locating and sealing.

Install new Daewoo-approved service replacement air conditioning (A/C) O-rings whenever a joint or a fitting is disassembled, except when the O-rings are provided on new components.

When replacing O-rings on an A/C component or a joint connection, the fitting design should be identified to ensure installation of the correct air conditioning service replacement O-ring. Some joint connections and components will implement a „captured" O-ring design fitting that uses a groove to retain the O-ring. Others do not have a groove and use a „non-captured" or „standard" O-ring. Assembly and tightening procedures are the same for both designs, but the O-rings are different.

Notice: Before installation, verify that both Orings and fittings have not been nicked or deformed. Deformed or nicked parts must be replaced. Failure to use the proper service replacement parts and procedures may result in excessive refrigerant leakage.

HANDLING REFRIGERANT

Caution: Always work in a well ventilated area and avoid breathing any refrigerant fumes. If you have difficulty breathing, seek medical attention immediately. If refrigerant comes in contact with any part of your body, flush the exposed area with water. If a rash or pain develops, seek medical attention.

Air conditioning systems contain refrigerant. This is a chemical mixture which requires special handling procedures to avoid personal injury.

Always wear goggles and wrap a clean cloth around the fittings, the valves and the connections when performing work that involves opening the refrigerant system. Do not weld or steam clean on or near any vehicle installed air conditioning lines or components.

All refrigerant drums are shipped with a heavy metal screw cap. The purpose of the cap is to protect the valve and the safety plug from damage. It is good practice to replace the cap after each use of the drum.

If it is necessary to transport or carry any container of refrigerant in a vehicle, do not carry it in the passenger compartment.

HANDLING OF REFRIGERANT LINES AND FITTINGS

Notice: Using too low or too high torque when tightening a fitting can result in loose joints or deformed joint parts. Both conditions can result in refrigerant leakage.

- Keep all metal tubing lines free of dents or kinks. Any line restrictions will cause the loss of system capacity.
- Never bend a flexible hose line to a radius of less than four times the diameter of the hose.
- Never allow a flexible hose line to come within 65 mm (2-1/2 inches) of the exhaust manifold.
- Inspect flexible hose lines regularly for leaks or brittleness.
- Replace flexible hose lines with new lines if you find signs of deterioration or leaking.
- Discharge the refrigeration system of all refrigerant before disconnecting any fitting in the refrigeration system.
- Proceed very cautiously regardless of the gauge readings.

Caution: Keep your face and your hands away from the fitting so that you will not be injured if there happens to be liquid refrigerant in the line.

- Open the fittings very slowly.
- If you notice pressure when you loosen a fitting, allow the pressure to bleed off as described under „Discharging, Adding Oil, Evacuating, and Charging Procedures for A/C System" in this section.
- Cap or tape any refrigerant line immediately after it is opened. This will prevent the entrance of moisture and dirt, which can cause internal compressor wear or plugged lines in the condenser, the evaporator core, the expansion valve, or the compressor inlet screens.

Important: Use two proper wrenches to connect the Oring fittings.

- Back up the opposing fitting to prevent distortion of the connecting lines or the components.
- Back up both the swagged fitting on the flexible hose connections and the coupling to which it is attached with two wrenches to prevent turning the fitting and damaging the ground seat.
- Keep the O-rings and the seats in perfect condition. A burr or a piece of dirt may cause a refrigerant leak.
- Dip new O-rings in clean polyalkaline glycol refrigerant oil before installation.

MAINTAINING CHEMICAL STABILITY IN THE REFRIGERATION SYSTEM

The efficient operation and the life of the air conditioning (A/C) system is dependent upon the chemical stability of the refrigeration system. When foreign materials, such as dirt, air, or moisture, contaminate the refrigeration system, they will change the stability of the refrigerant and the polyalkaline glycol (PAG) compressor oil. They will also affect the pressure-temperature relationship, reduce efficient operation, and can possibly cause interior corrosion and abnormal wear of moving parts.

Observe the following practices to ensure chemical stability in the system:

- Wipe away dirt or oil at and near any connection before opening that connection. This will reduce the chance of dirt entering the system.
- Cap, plug, or tape both sides of a connection as soon as possible after opening the connection. This will prevent the entry of dirt, foreign material, and moisture.
- Keep all tools clean and dry, including the manifold gauge set and all replacement parts.
- Use a clean and dry transfer device and container to add polyalkaline glycol refrigerant oil. This will ensure that the oil remains as moisture-free as possible. Refer to „Discharging, Adding Oil, Evacuating, and Charging Procedures for A/C System" in this section.
- Have everything you need ready to allow you to perform all operations quickly when opening an A/C system. Do not leave the A/C system open any longer than necessary.
- Evacuate and recharge any A/C system that has been opened. Refer to „Discharging, Adding Oil, Evacuating, and Charging Procedures for A/C System" in this section.

All service parts are dehydrated and sealed before shipping. They should remain sealed until just before making connections. All the parts should be at room temperature before uncapping. This prevents condensation of moisture from the air from entering the system. Reseal all parts as soon as possible.

DISCHARGING, ADDING OIL, EVACUATING, AND CHARGING PROCEDURES FOR A/C SYSTEM

Caution: Use only refillable refrigerant tanks that are authorized for the charging station being used. The use of other tanks may cause personal injury or void the warranty. Refer to the manufacturer's instructions for the charging station.

Caution: To avoid personal injury, always wear goggles and gloves when performing work that involves opening the refrigeration system.

A charging station discharges, evacuates, and recharges an air-conditioning (A/C) system with one hookup. Filtering the refrigerant during the recovery cycle together with filtering during the evacuation cycle ensures a supply of clean, dry refrigerant for A/C system charging.

Notice:

- Never use the R-134a charging station on a system charged with R-12. The refrigerants and the oils from each system are not compatible with those from the other system and must never be mixed, even in the smallest amount. Mixing refrigerant residue will damage the equipment.
- Never use adapters which convert from one size fitting to another. Such use allows contamination, which may cause system failure.

Charging Station Setup and Maintenance

There are many charging stations available. All perform the various tasks required to discharge the system and recover refrigerant, evacuate the system, add a measured amount of oil, and recharge an A/C system with a measured amount of refrigerant. Refer to the manufacturer's instructions for all initial setup procedures and all maintenance procedures.

Control Panel Functions

A charging station will have controls and indicators to allow the operator to control and monitor the operation in progress. Refer to the manufacturer's instructions for details. These can be expected to include the following:

1. Main Power Switch
   - Supplies electrical power to the control panel.
2. Display
   - Shows the time programmed for vacuum.
   - Shows the weight of the refrigerant programmed for recharging.
   - Refer to the manufacturer's instructions for detailed programming information.
3. Low-Side Manifold Gauge
   - Shows the system's low-side pressure.
4. High-Side Manifold Gauge
   - Shows the system's highside pressure.
5. Control Panel
   - Controls the various operating functions.
6. Low-Side Valve
   - Connects the low side of the A/C system to the unit.
7. Moisture Indicator
   - Shows whether the refrigerant is wet or dry.
8. High-Side Valve
   - Connects the high side of the A/C system to the unit.

Refrigerant Recovery

Important: Use only a refrigerant tank that is designed for the charging station in use. The unit's overfill limitation mechanism is calibrated specifically for use

with this tank. The tank's valves are also manufactured specifically for this unit.

1. Attach the high-side hose with the quick disconnect coupler to the high-side fitting of the vehicle's A/C system.
2. Open the coupler valve.
3. Attach the low-side hose with the quick disconnect coupler to the low-side fitting of the vehicle's A/C system.
4. Open the coupler valve.
5. Check the high-side and the low-side gauges on the unit's control panel in order to ensure that the A/C system has pressure. If there is no pressure, there is no refrigerant in the system to recover.

Important: If there is no refrigerant in the system, do not continue with the recovery operation which would, under this condition, draw air into the recovery tank.

6. Open both the high-side and the low-side valves.
7. Open the gas and the liquid valves on the tank.
8. Drain any oil that may be in the oil separator.
9. Close the oil drain valve.
10. Plug the unit into the proper voltage outlet.
11. Turn on the main power switch.

Notice: Never reuse refrigerant oil. Damage to the A/C system may result from such reuse. Dispose of the refrigerant oil properly.

12. Begin the recovery process. Refer to the manufacturer's instructions for the charging station in use.

Important: Some A/C system polyalkaline glycol (PAG) lubricating oil may be removed with the refrigerant during recovery. The amount of oil removed varies. A charging station separates the oil from the refrigerant and provides a means of determining how much oil was removed. Replace the same amount of oil when recharging the system. Refer to the manufacturer's instructions for the charging station in use.

13. Wait 5 minutes, then check the control panel low-side gauge. If the A/C has maintained vacuum, the recovery is complete.
14. If the low-side gauge pressure rises above zero, there is more refrigerant in the system. Recover the additional refrigerant. Repeat this step until the system maintains vacuum for 2 minutes.

Important: If the control indicator shows that the refrigerant tank is full during the recovery process and the unit shuts off, install an empty unit tank to store the refrigerant needed for steps later in the procedure. Do not use any other type of tank.

Evacuation

The unit tank must contain a sufficient amount of R-134a refrigerant for charging. Check the amount of refrigerant in the tank. If there is less than 3.6 kg (8 pounds) of refrigerant, add new refrigerant to the tank. Refer to the manufacturer's instructions for adding refrigerant.

1. Verify that the high-side and the low-side hoses are connected to the A/C system. Open both the high-side and the low-side valves on the unit's control panel.
2. Open both the gas and the liquid valves on the tank.

Important: Refer to the manufacturer's instructions for the charging station in use. It is necessary to evacuate the system before recharging it with new or recycled refrigerant.

3. Start the vacuum pump and begin the evacuation process. Non-condensable gases (mostly air) are vented from the tank automatically during the recycling process. You may hear the pressure being released.
4. Check for leaks in the system. Refer to the manufacturer's instructions for the charging station in use.

Important: Change the vacuum pump oil frequently. Refer to the manufacturer's instructions for the charging station in use.

A/C System Oil Charge Replenishing

Any oil removed from the A/C system during the recovery process must be replenished at this time.

1. Use the correct graduated bottle of PAG oil for the R-134a system.

Important:

- Keep the oil bottles tightly capped at all times to protect the oil from moisture and contamination.
- You must have an A/C system vacuum for this operation. Never open the oil injection valve while there is positive pressure in the A/C system. This will result in oil blowback through the bottle vent.
- Never let the oil level drop below the pickup tube while charging or replenishing the system, as this will allow air into the A/C system.

2. Refer to the manufacturer's instructions for the charging station in use. Add the proper amount of PAG oil to the system.
3. Close the valve when the required oil charge has been pulled into the system.

Charging

Important: Evacuate the A/C system before charging.

1. Close the low-side valve on the control panel.
2. Open the high-side valve on the control panel.
3. Refer to the manufacturer's instructions for the charging station in use.
4. Enter the amount of refrigerant needed to charge the A/C, making sure to use the correct system of measurement, i.e. kilogram (kg) or pound (lb).
5. Begin the charging process.

Successful Transfer Complete

1. Close the high-side valve on the unit's control panel. Both valves should be closed.

2. Start the vehicle and the A/C system.
3. Let the engine run until the readings on the high-side gauge and the low-side gauge stabilize.
4. Compare the readings to the system specifications.
5. Check the evaporator outlet temperature to ensure that the A/C system is operating within the system specifications.
6. Keep the A/C running.
7. Close the high-side coupler valve.
8. Disconnect the high-side hose from the vehicle.
9. Open the high-side and low-side valves on the control panel. The system will quickly draw in refrigerant from both hoses through the low-side hose.
10. Close the low-side coupler valve.
11. Disconnect the low-side hose from the vehicle.

Unsuccessful Transfer

Sometimes the total charge does not transfer into the A/C system. There are two reasons why this may occur:

1. The pressure in the unit's tank and the pressure in the A/C system are roughly equal.
   - This will cause the transfer to proceed too slowly.
   - Refer to the manufacturer's instructions for the charging station in use.
2. There was not enough refrigerant in the unit's tank to transfer the full charge.
   - It is necessary to recover the partial charge of refrigerant from the vehicle and then evacuate the A/C system and charge it again.
   - Refer to the manufacturer's instructions for the charging station in use.

SERVICEABLE COMPONENTS

COMPONENTS USED IN NON-A/C SYSTEMS

Refer to *Section 7A, Heating and Ventilation System* for on-vehicle service procedures for the following sections:

- Blower Motor.
- Blower Resistor.
- Control Assembly Knob Lighting.
- Control Assembly.
- Heater Hoses.
- High-Blower Relay.
- A/C Control Vacuum Tank.
- Temperature Control Cable.

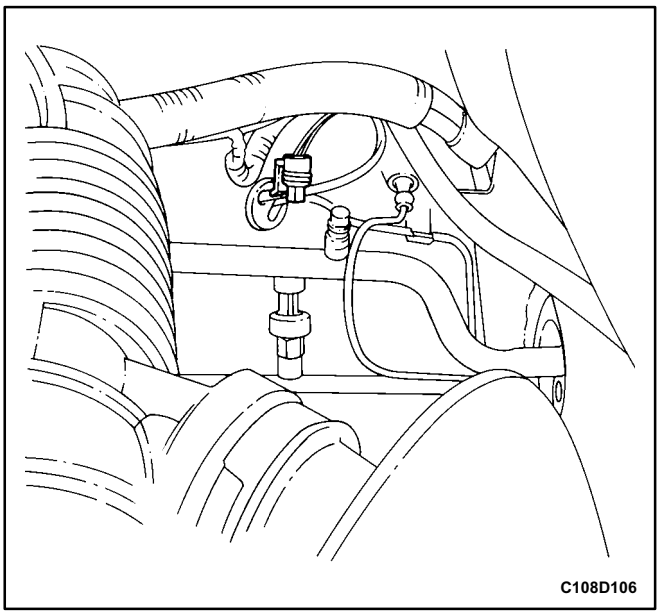

A/C PRESSURE TRANSDUCER

Removal Procedure

1. Disconnect the negative battery cable.
2. Release the connector lock and pull the transducer wire connector out.

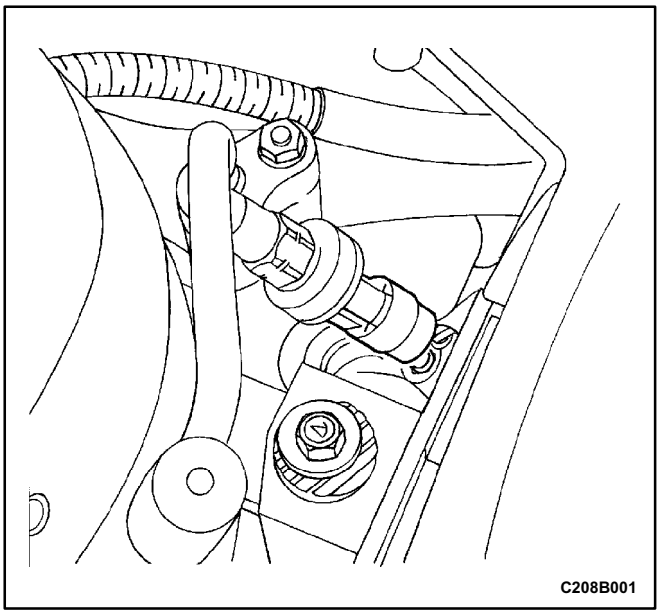

3. Remove the transducer with a wrench.
4. Discard the O-ring seal.

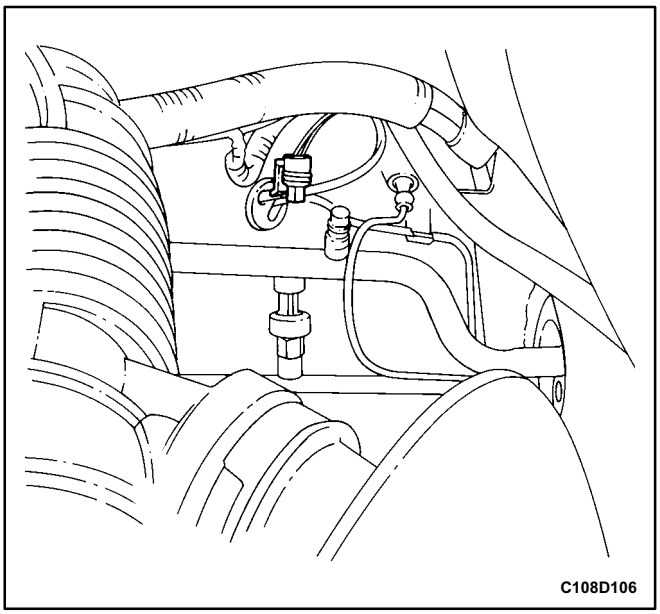

Installation Procedure

1. Install the new O-ring seal on the transducer.
2. Install the pressure transducer.

   Tighten

   Tighten the pressure transducer to 10 N•m (89 lb•in).
3. Connect the wire connector.
4. Connect the negative battery cable.

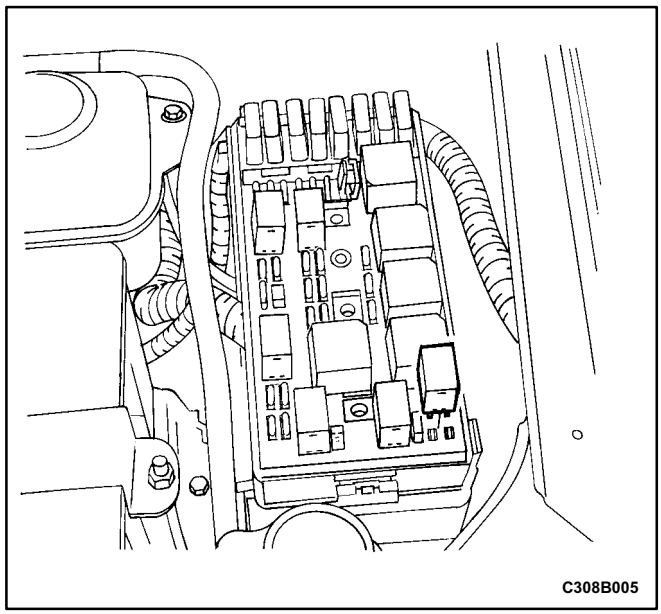

A/C COMPRESSOR RELAY

Removal Procedure

1. Disconnect the negative battery cable.
2. Pull the relay straight up and out from its location in the engine fuse block at the left front corner.

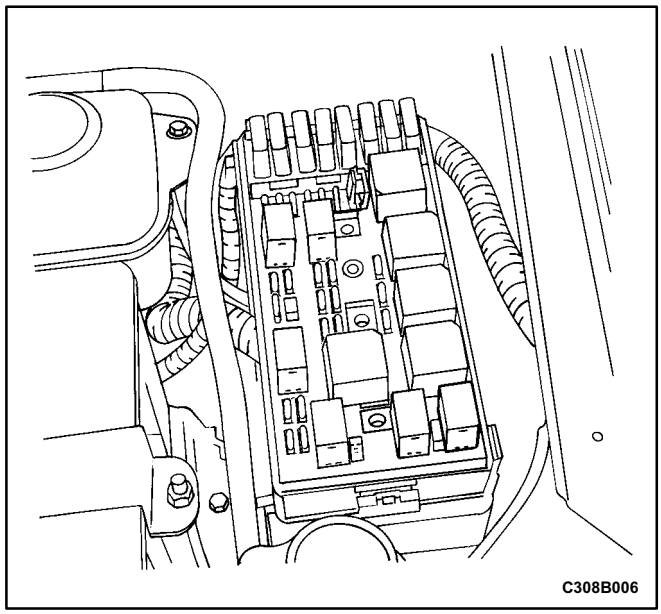

Installation Procedure

1. Align the relay terminal contacts with the base receptacle.
2. Push the relay into the base until it is seated.
3. Connect the negative battery cable.

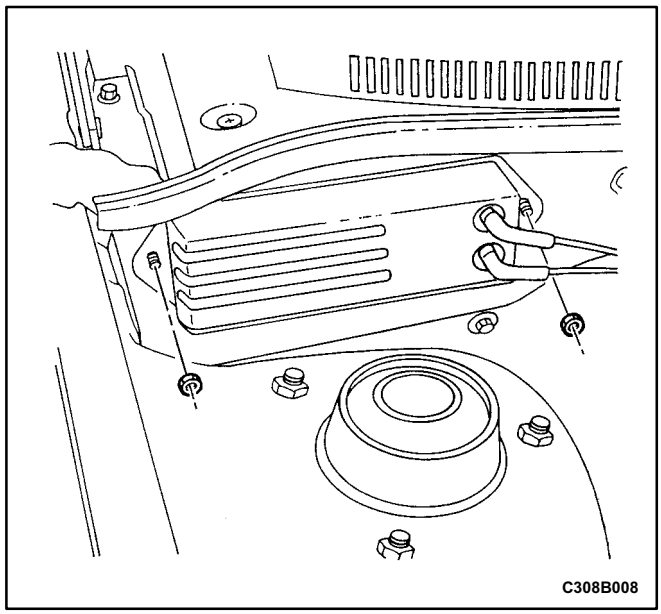

AIR FILTER

(Left-Hand Drive Shown, Right-Hand Drive Similar)

Removal

1. Remove the two nuts that secure the vacuum tank to the fire wall.

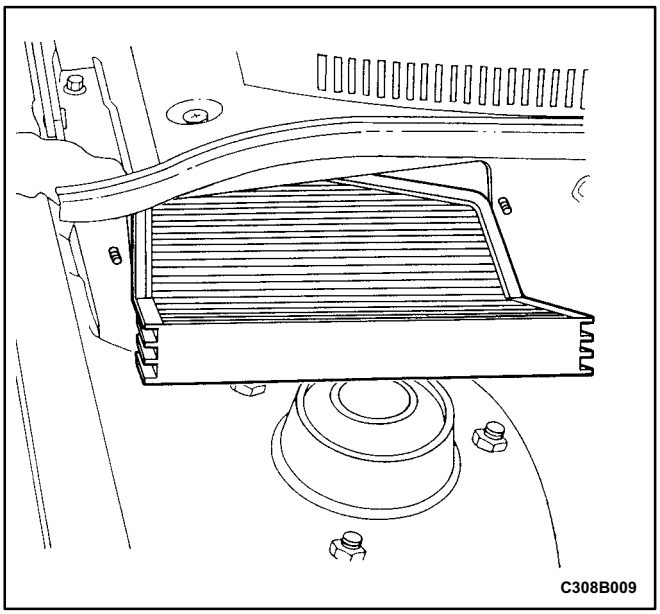

2. Set the vacuum tank aside.
3. Pull the filter out of the cavity in the fire wall.

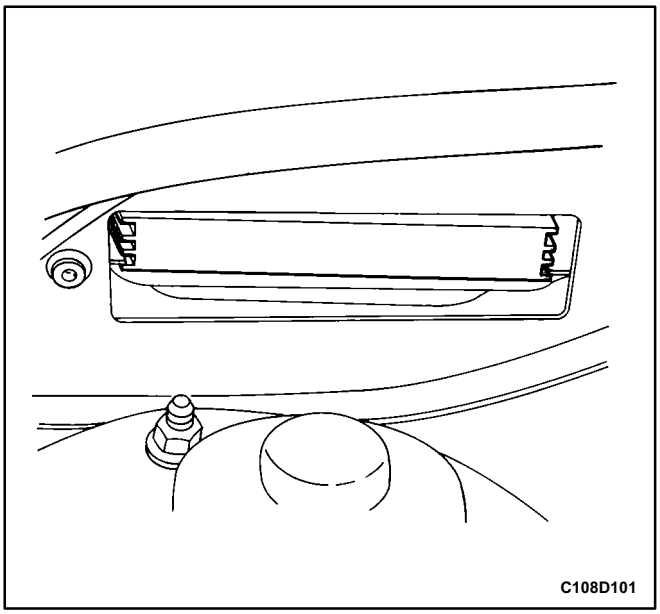

Installation

1. Install the filter into its cavity in the fire wall.
   - Align the fins on the plastic frame of the filter with the grove in the holder before attempting to insert the filter into place.
2. Hold the vacuum tank in place over its mounting studs on the fire wall.
3. Install the nuts to secure the vacuum tank to the fire wall.

Tighten

Tighten the vacuum tank-to-fire wall nuts to 4 N•m (35 lb•in).

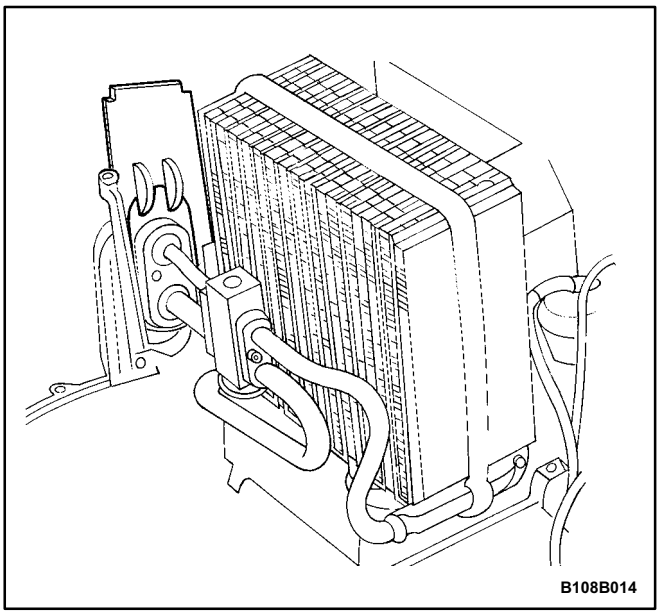

A/C EXPANSION VALVE

(Left-Hand Drive Shown, Right-Hand Drive Similar)

Removal Procedure

1. Remove the heater/air distributor case assembly. Refer to „Heater/Air Distributor Case Assembly” in this section.
2. Remove the screws that secure the evaporator case halves.
3. Remove the evaporator core case cover.
4. Slide the evaporator flange support plate upward to facilitate removal of the evaporator.

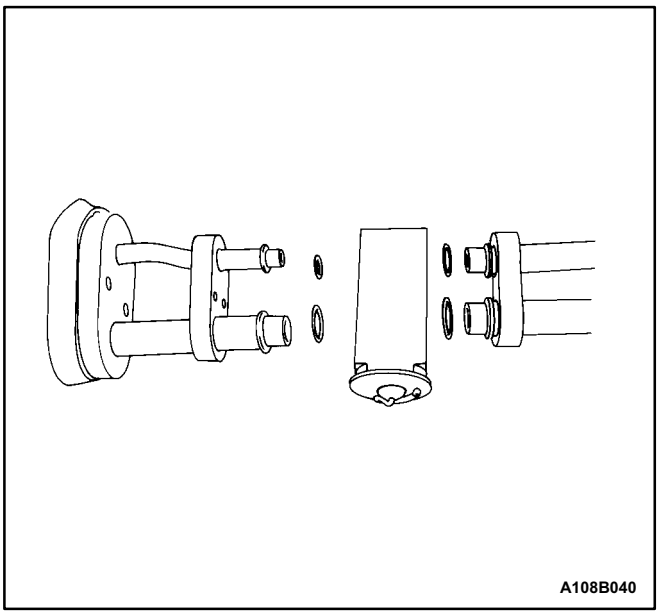

5. Remove the evaporator from the case.
6. Remove the expansion valve bolts.
7. Remove the expansion valve.
8. Remove the O-rings from the evaporator lines and the air conditioning (A/C) lines.

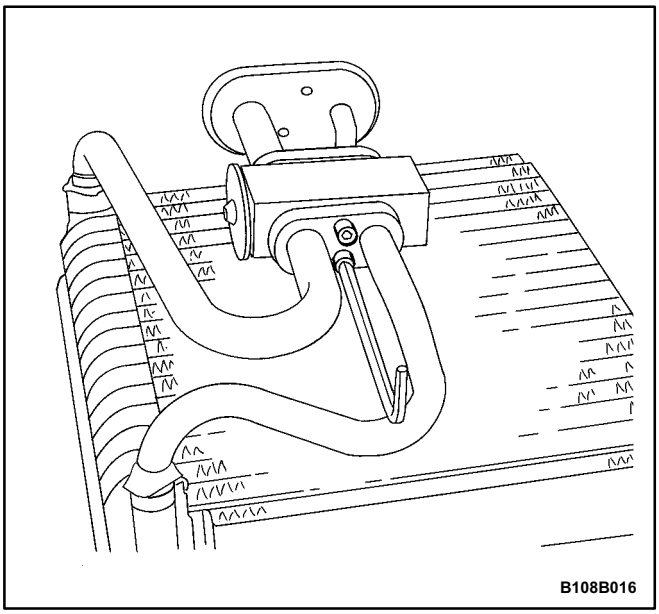

Installation Procedure

1. Clean the O-ring surface areas of dirt or contamination.
2. Install new O-rings on the evaporator lines and the A/C lines.
3. Install a new expansion valve onto the evaporator lines.
4. Insert the expansion valve bolts through the expansion valve into the mounting surface of the evaporator flange.

Tighten

Tighten the expansion valve bolts to 10 N•m (89 lb•in).

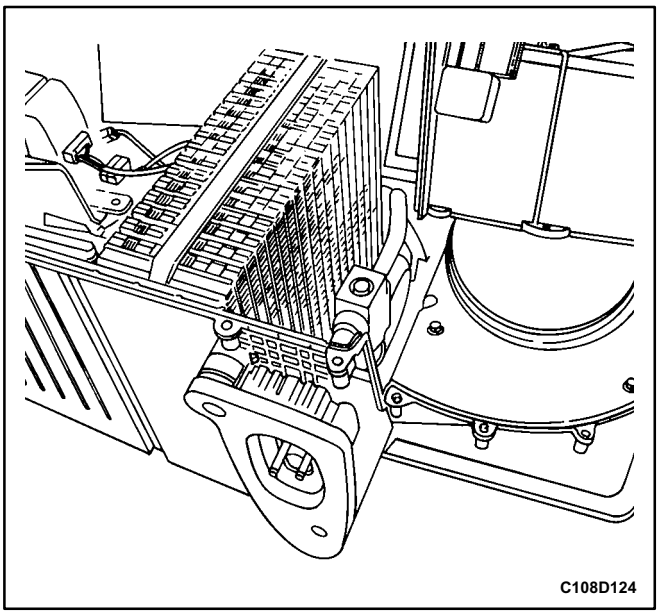

5. Install the evaporator core into the case. Center the evaporator flange in the case opening.
6. Install the evaporator core case cover with the screws.
7. Install the heater/air distributor case. Refer to „Heater/Air Distributor Case” in this section.
8. Connect the negative battery cable.
9. Evacuate and recharge the system. Refer to „Discharging, Adding Oil, Evacuating, and Charging Procedures for A/C System” in this section.

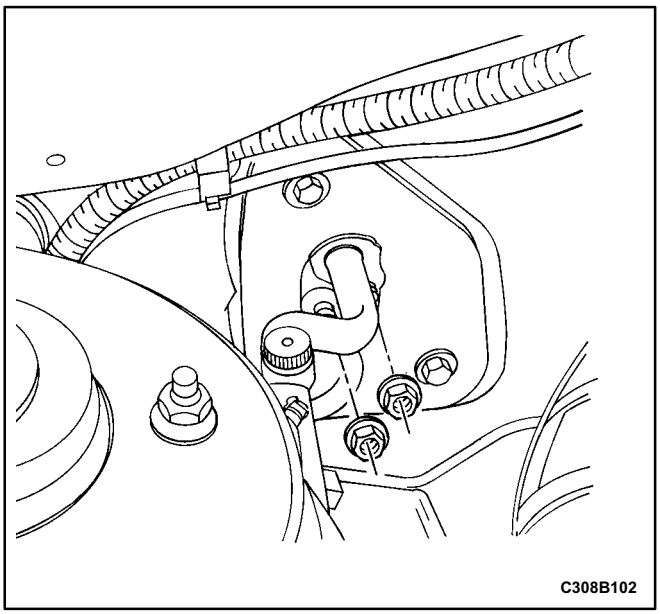

HEATER/AIR DISTRIBUTOR CASE ASSEMBLY

(Left-Hand Drive Shown, Right-Hand Drive Similar)

Removal Procedure

1. Disconnect the negative battery cable.
2. Recover the refrigerant. Refer to „Discharging, Adding Oil, Evacuating, and Charging Procedures for A/C System" in this section.
3. Remove the nuts that secure the air conditioning (A/C) suction hose and liquid evaporator pipe blocks at the fire wall.

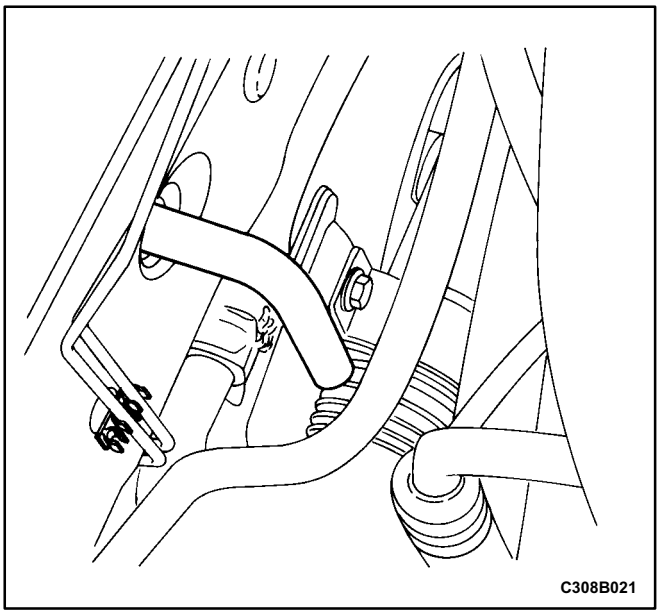

4. Loosen the A/C suction hose clamp bolt. Loosen the liquid evaporator pipe clamp bolt.
5. Loosen the A/C suction hose and the liquid evaporator pipe clamps to allow movement of the tubes.
6. Pull the A/C suction hose and liquid evaporator pipe from the evaporator inlet.
7. Remove the evaporator drain hose.
8. Remove the heater/air distributor case from the vehicle. Refer to *Section 7A, Heating and Ventilation System.*

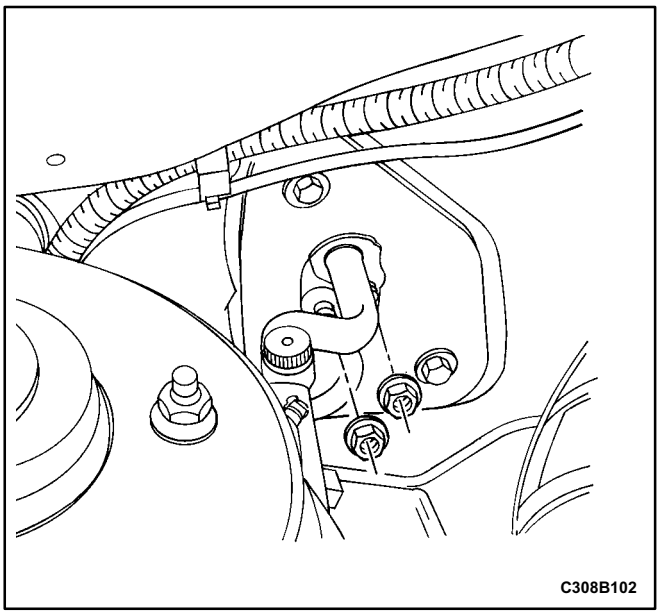

Installation Procedure

1. Install two new O-rings onto the A/C suction hose and the liquid evaporator pipe at the fire wall in the engine compartment.

Important: Do not try to verify the operation of the system until you have installed and recharged the A/C system.

2. Install the heater/air distributor case into the vehicle. Refer to *Section 7A, Heating and Ventilation System.*
3. Install the A/C suction hose and the liquid evaporator pipes onto the evaporator flange connecting block studs.
4. Secure the liquid evaporator pipe and the suction hose to the evaporator flange with the nuts.

Tighten

Tighten the suction hose connecting block retaining nuts to 10 N•m (89 lb•in).

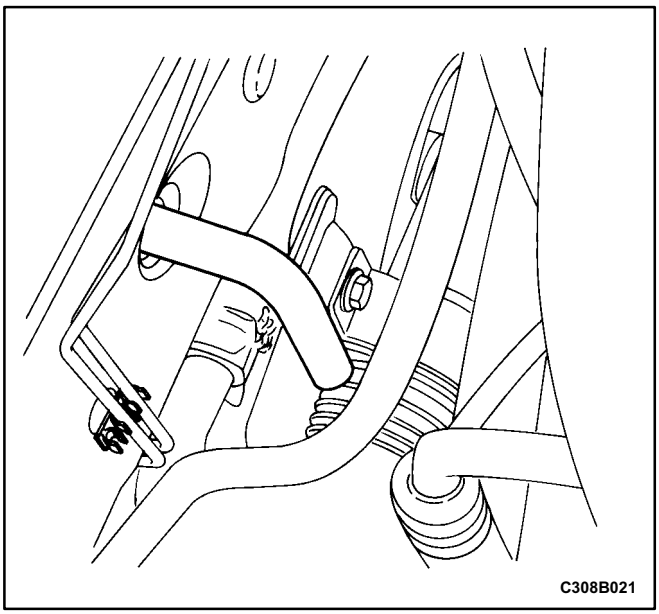

5. Install the A/C suction hose clamp with the bolt.

   Tighten

   Tighten the suction hose clamp bolt to 10 N•m (89 lb•in).

6. Install the liquid evaporator pipe clamp with the bolt.

   Tighten

   Tighten the liquid evaporator pipe clamp bolt to 4 N•m (35 lb•in).

7. Install the evaporator drain hose.
8. Evacuate and recharge the A/C system. Refer to „Discharging, Adding Oil, Evacuating, and Charging Procedures for A/C System" in this section.
9. Operate the HVAC control to verify the proper function of the heating and the cooling systems.

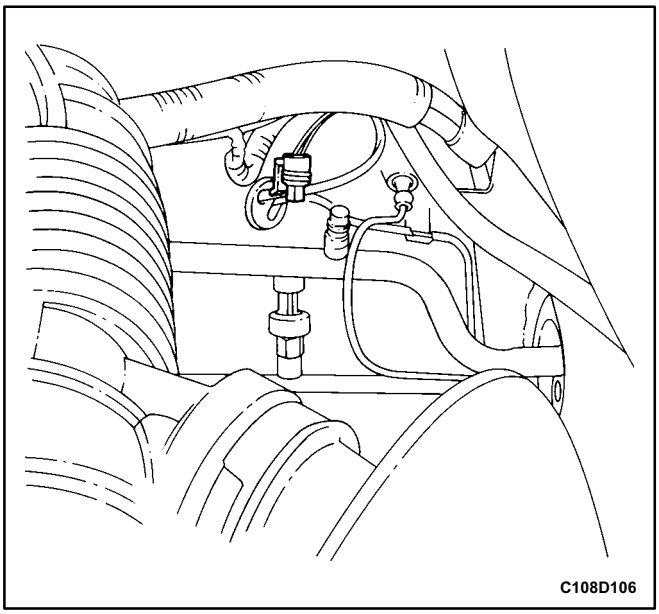

A/C HIGH-PRESSURE PIPE LINE

(Left-Hand Drive Shown, Right-Hand Drive Similar)

Removal Procedure

1. Disconnect the negative battery cable.
2. Recover the refrigerant. Refer to „Discharging, Adding Oil, Evacuating, and Charging Procedures for A/C System" in this section.
3. Remove the air cleaner housing assembly mounting bolts and the air cleaner housing assembly.
4. Disconnect the electrical connector at the pressure transducer.

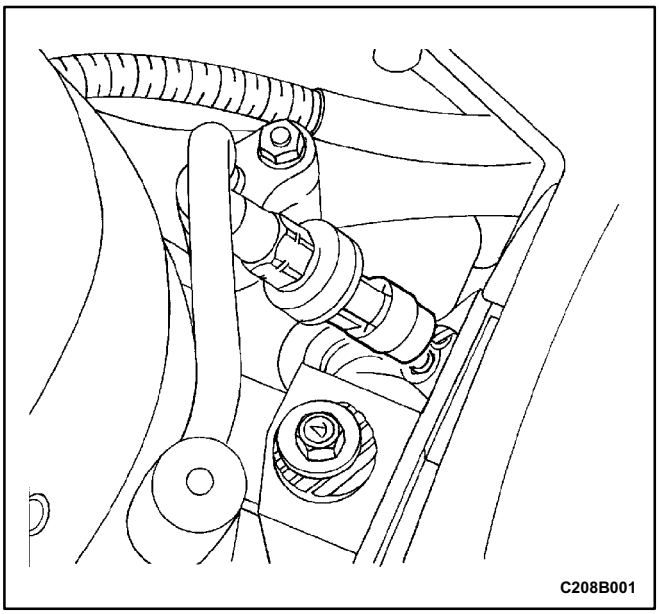

5. For right-hand drive vehicles, the tranducer is located close to the right wheel shook tower.

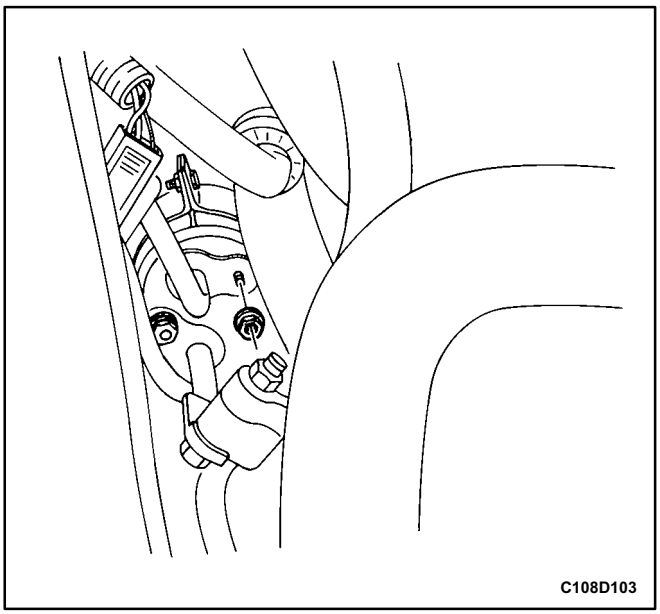

6. Remove the bolts which secure the clamps that hold the high-pressure pipe to the vehicle.
7. Remove the high-pressure pipe to evaporator flange connecting block retaining nut.
8. Cap the highpressure pipe opening.
9. Remove the high-pressure pipe to receiver-dryer connecting block retaining nut.
10. Remove the high-pressure pipe from the vehicle.
11. Cap the opening at the receiver-dryer to prevent contamination.

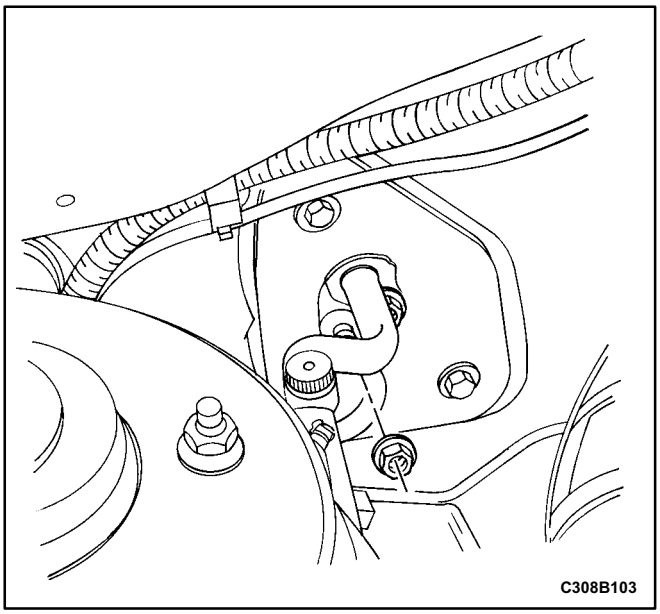

Installation Procedure

1. Position the high-pressure pipe into the vehicle.
2. Install a new O-ring on the pipe at the receiver-dryer.
3. Install the high-pressure pipe to receiver-dryer connecting block nut.

   Tighten

   Tighten the high-pressure pipe to receiver-dryer connecting block nut to 10 N•m (89 lb•in).
4. Install the the high pressure pipe to evaporator flange connecting block nut.

   Tighten

   Tighten the high-pressure pipe to evaporator flange connecting block nut to 10 N•m (89 lb•in).

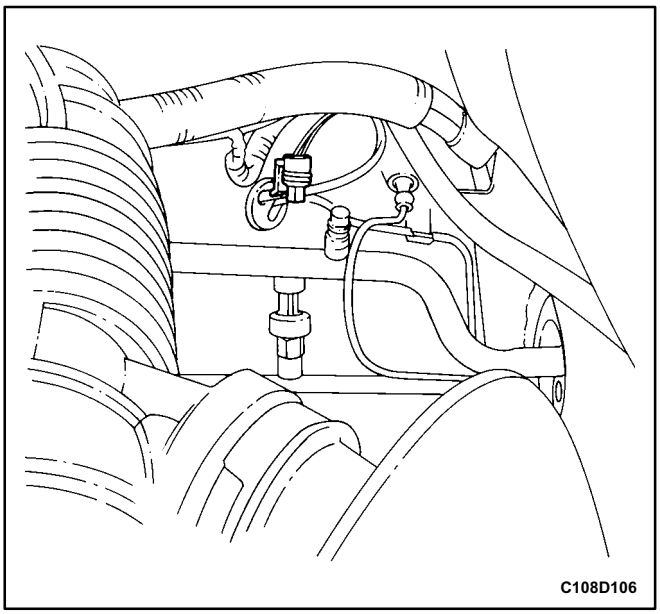

5. Install the bolts which secure the clamps that hold the high-pressure pipe to the vehicle.

   Tighten

   Tighten the clamp bolts to 4 N•m (35 lb•in).
6. Connect the electrical connector to the pressure transducer.
7. Install the air cleaner housing assembly with the retaining bolts.

   Tighten

   Tighten the air cleaner housing assembly retaining bolts to 12 N•m (106 lb•).
8. Connect the negative battery cable.
9. Evacuate and recharge the A/C system. Refer to „Discharging, Adding Oil, Evacuating, and Charging Procedures for A/C System” in this section.

HEATER CORE

Removal Procedure

1. Disconnect the negative battery cable.
2. Remove the heater/air distributor case assembly. Refer to ”Heater/Air Distributor Case Assembly” in this section.
3. Remove the heater core from the case. Refer to *Section 7A, Heating and Ventilation System.*

Installation Procedure

1. Install the heater core into the case. Refer to *Section 7A, Heating and Ventilation System.*
2. Install the heater/air distributor case assembly. Refer to „Heater/Air Distributor Case Assembly” in this section.
3. Fill the cooling system. Refer to *Section 1D, Engine Cooling.*
4. Connect the negative battery cable.
5. Evacuate and recharge the A/C system. Refer to „Discharging, Adding Oil, Evacuating, and Charging Procedures for A/C System” in this section.

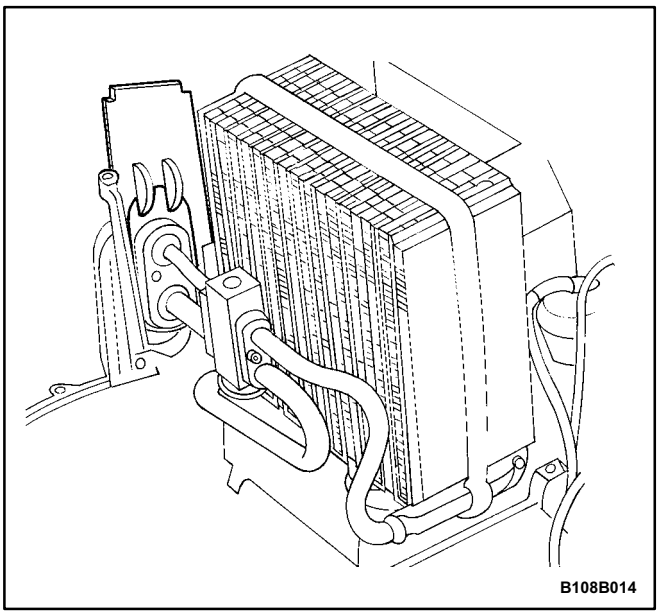

EVAPORATOR CORE

(Left-Hand Drive Shown, Right-Hand Drive Similar)

Removal Procedure

1. Disconnect the negative battery cable.
2. Remove the instrument panel carrier assembly. Refer to *Section 9E, Instrumentation/Driver Information.*
3. Remove the heater/air distributor case assembly. Refer to „Heater/Air Distributor Case” in this section.
4. Remove the screws that secure the evaporator case halves.
5. Remove the evaporator core case cover.
6. Slide the evaporator flange support plate upward to facilitate removal of the evaporator.

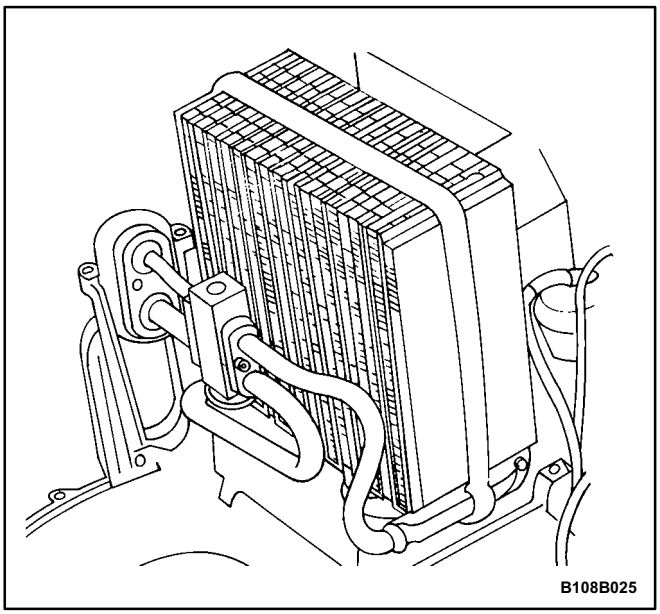

7. Remove the evaporator core from the case.
8. Remove the air conditioning (A/C) expansion valve. Refer to „A/C Expansion Valve” in this section.

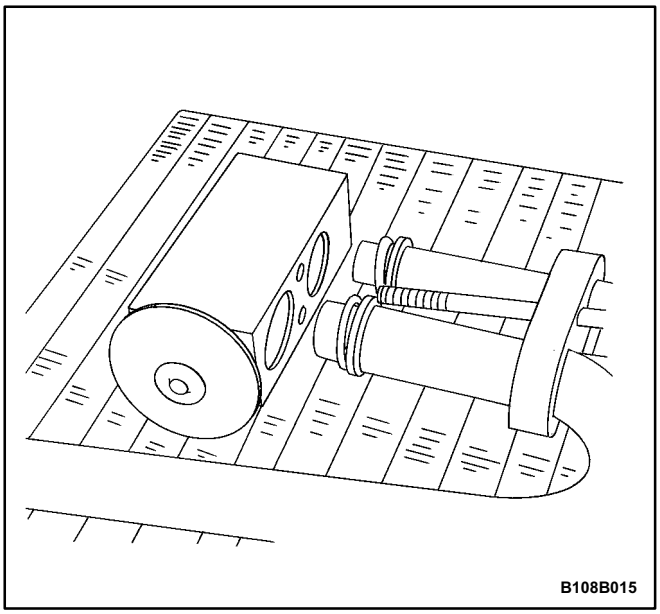

Installation Procedure

1. Install the O-rings onto the evaporator tubes.
2. Install the A/C expansion valve. Refer to „A/C Expansion Valve” in this section.

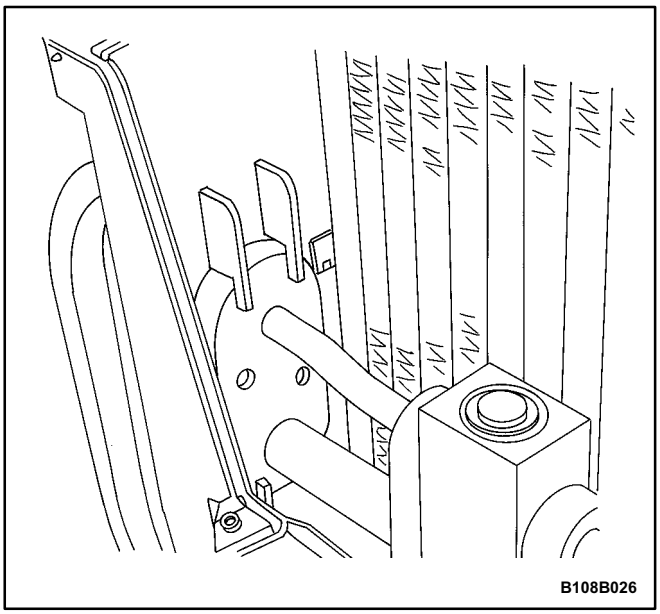

3. Install the evaporator core into the case. Center the evaporator flange in the case opening.
4. Assemble the evaporator case halves with the screws.
5. Install the heater/air distributor case. Refer to „Heater/Air Distributor Case” in this section.
6. Install the instrument panel carrier assembly. Refer to *Section 9E, Instrumentation/Driver Information.*
7. Connect the negative battery cable.
8. Evacuate and recharge the A/C system. Refer to „Discharging, Adding Oil, Evacuating, and Charging Procedures for A/C System” in this section.

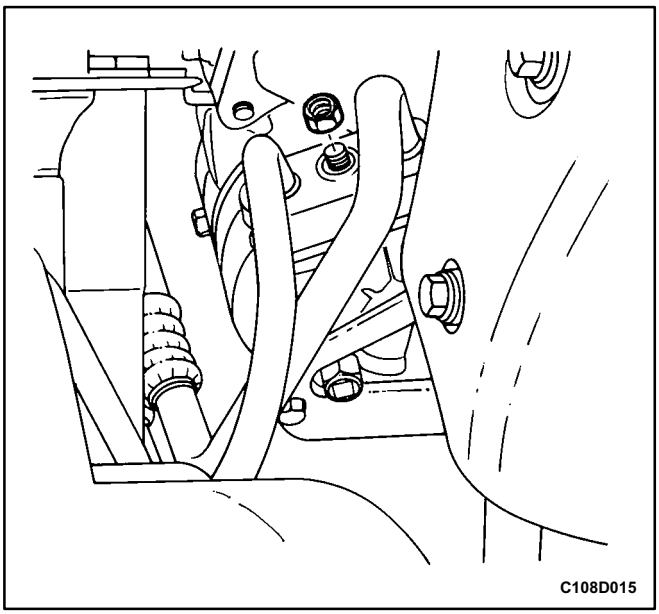

A/C SUCTION HOSE ASSEMBLY

Removal Procedure

1. Disconnect the negative battery cable.
2. Discharge and recover the refrigerant. Refer to „Discharging, Adding Oil, Evacuating, and Charging Procedures for A/C System" in this section.
3. Remove the air cleaner housing assembly mounting screws.
4. Remove the air cleaner housing.
5. Remove the retaining nut from the hose connecting block and disconnect the air conditioning (A/C) hose assembly connector block at the top rear of the compressor. Discard the sealing washers.
6. Cap all of the openings to prevent contamination.

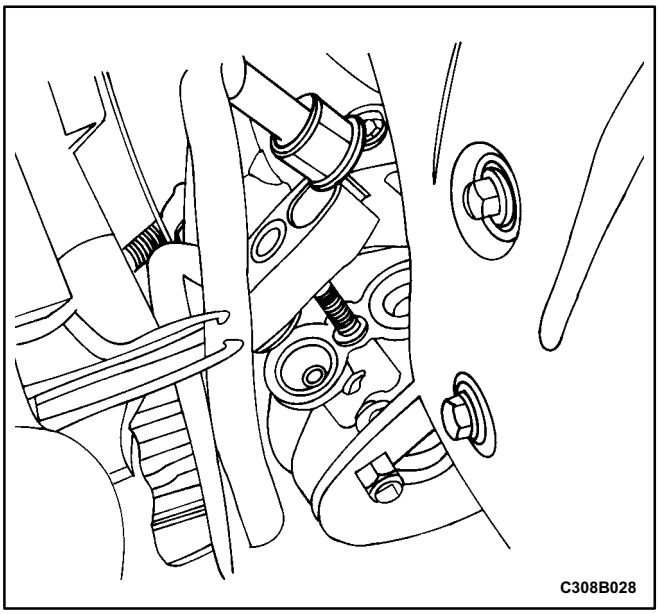

7. Remove the suction hose support clamp bolt and the clamp along the left side of the engine compartment fender well.
8. Remove the suction hose support clamp nut and the clamp on the left side strut tower.
9. Remove the evaporator flange connecting block retaining nut and disconnect the A/C suction hose at the fire wall evaporator flange connecting block. Discard the O-ring seal.
10. Remove the A/C suction hose.
11. Cap the opening to the evaporator flange to prevent contamination.

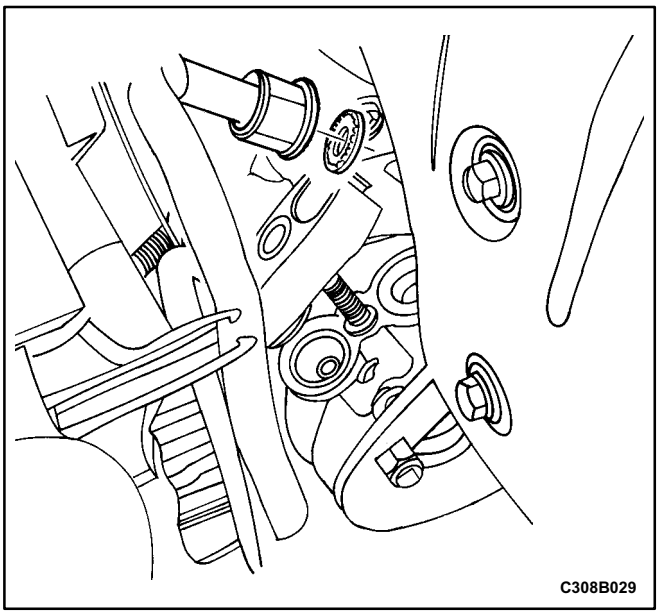

Installation Procedure

1. Install a new O-ring seal onto the suction hose end at the evaporator flange.
2. Position the hose assembly and the support clamp in place in the vehicle.
3. Insert the suction hose end into the evaporator flange.
4. Install the evaporator flange connecting block retaining nuts.

Tighten

Tighten the suction hose connecting block retaining nuts to 10 N•m (89 lb•in).

5. Install new sealing washers onto the pilots of the suction/discharge block fitting. The washers must be seated against the surface of the block fitting.

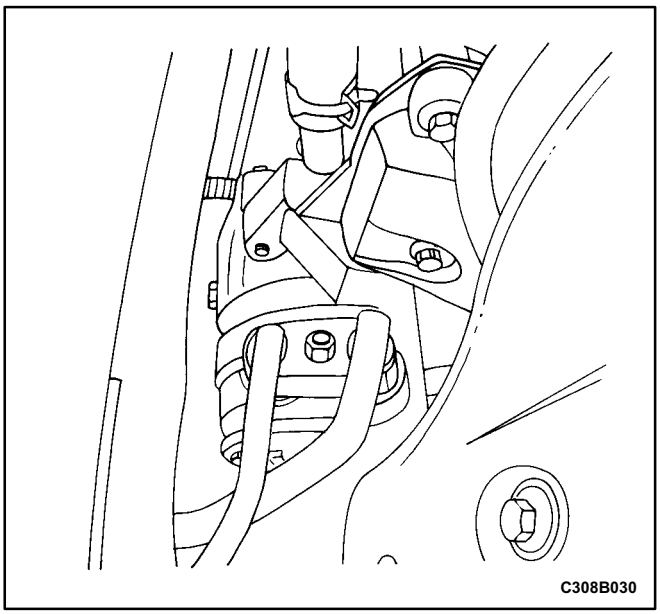

6. Mate the discharge hose connecting block to the compressor. Hold it in place while tightening the retaining nut.

Tighten

Tighten the discharge hose connecting block to compressor retaining nut to 33 N•m (24 lb•ft).

7. Install the suction hose support clamp on the left-side strut tower and tighten the support clamp retaining nut.

Tighten

Tighten the suction hose support clamp retaining nut to 5 N•m (44 lb•in).

8. Install the suction hose support clamp along the left side of the engine compartment fender well.

Tighten

Tighten the suction hose support clamp retaining bolt to 5 N•m (44 lb•in).

9. Install the air cleaner housing assembly.
   - Seat the housing in its place with the pickup tube in the hole provided.
   - Install the bolts that secure the housing.

Tighten

Tighten the air cleaner housing assembly retaining bolts to 12 N•m (106 lb•).

10. Connect the negative battery cable.
11. Evacuate and recharge the A/C system. Refer to „Discharging, Adding Oil, Evacuating, and Charging Procedures for A/C System" in this section.

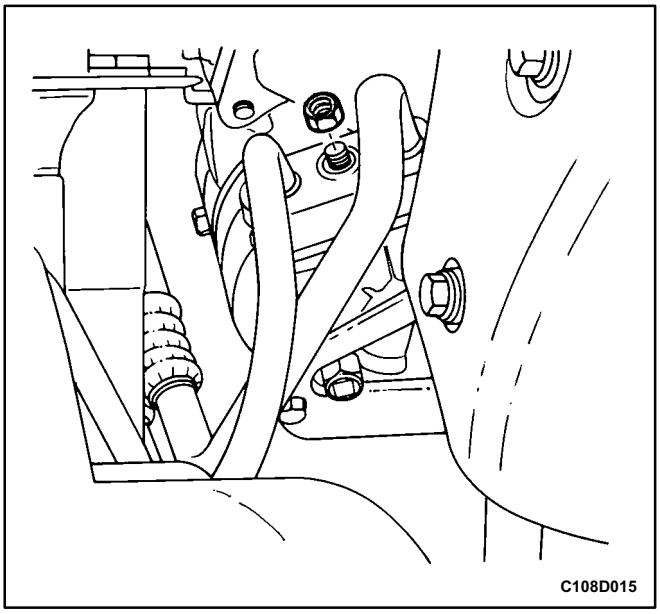

A/C DISCHARGE HOSE - COMPRESSOR TO CONDENSER

Removal Procedure

1. Disconnect the negative battery cable.
2. Recover the refrigerant. Refer to „Discharging, Adding Oil, Evacuating, and Charging Procedures for A/C System" in this section.
3. Remove the nut at the compressor hose connecting block.

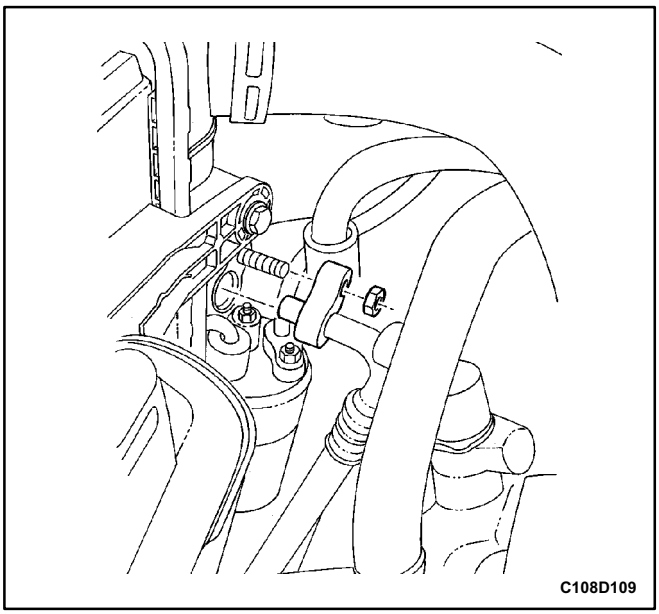

4. Remove the nut at the condenser connecting block.
5. Remove the hose from the vehicle.

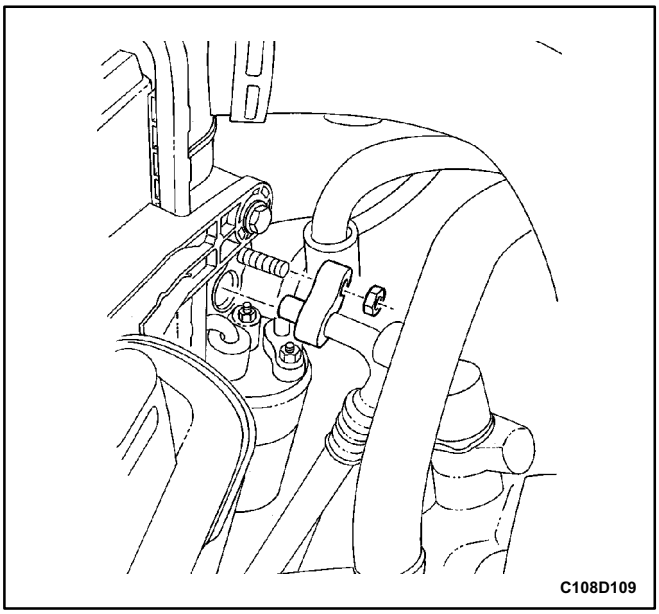

Installation Procedure

1. Install new sealing washers at the compressor connecting block end and a new O-ring at the condenser connecting block end.
2. Position the hose into the vehicle, and install the nut at the condenser connecting block.

   Tighten

   Tighten the discharge hose connecting block to condenser retaining nut to 16 N•m (12 lb•ft).

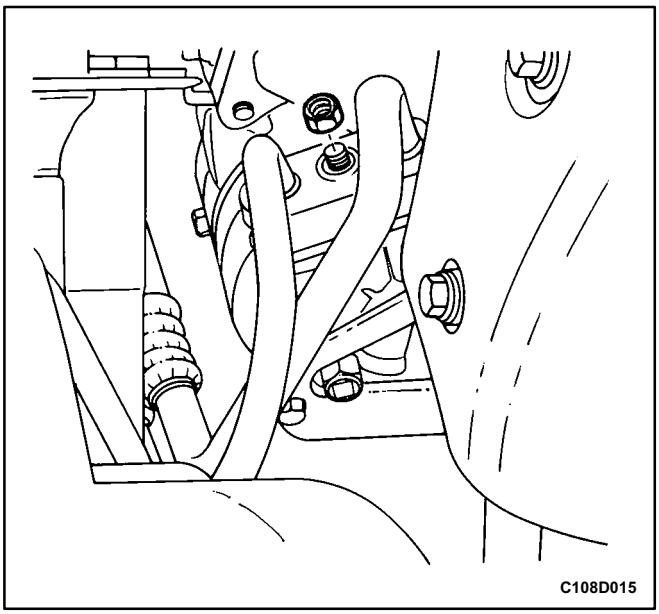

3. Mate the hose connecting the connecting block to the compressor, and install the retaining nut.

   Tighten

   Tighten the discharge hose connecting block to compressor retaining nut to 33 N•m (24 lb•ft).
4. Evacuate and recharge the A/C system. Refer to „Discharging, Adding Oil, Evacuating, and Charging Procedures for A/C System” in this section,
5. Connect the negative battery cable.

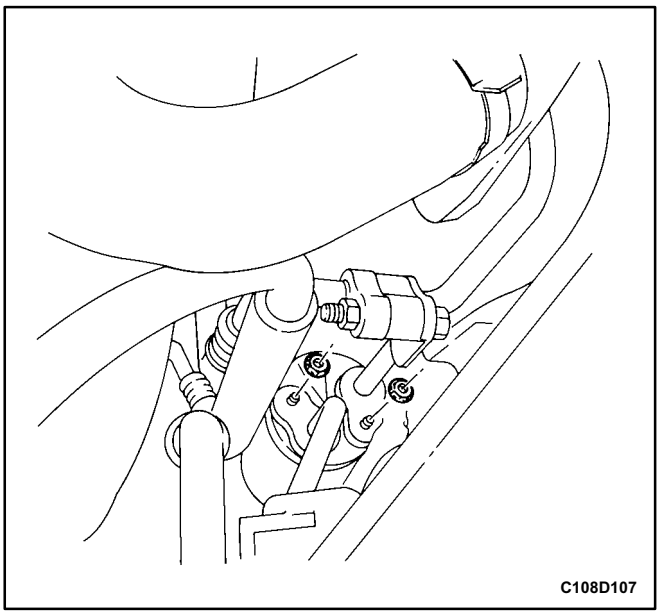

RECEIVER-DRYER

Removal Procedure

1. Disconnect the negative battery cable.
2. Discharge and recover the refrigerant. Refer to „Discharging, Adding Oil, Evacuating, and Charging Procedures for A/C System" in this section.
3. Remove the high-pressure pipe to receiver-dryer connecting block nut and remove the pipe from the receiver-dryer.
4. Remove the receiver-dryer to condenser pipe nut.

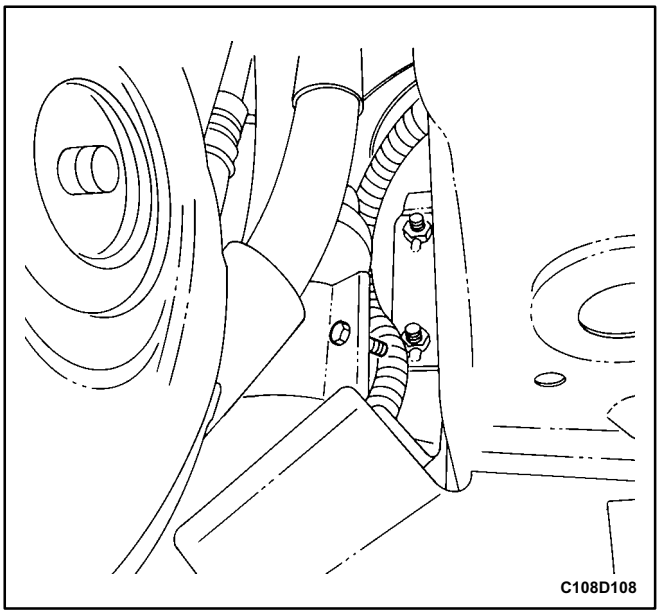

5. Loosen the bolt that secures the receiver-dryer band clamp.

Notice: Hold the receiver-dryer to condenser pipe to support it so that the pipe is not damaged while being removed from the receiver-dryer.

6. Remove the receiver-dryer by sliding it down and out of the band clamp.
7. Cap all open connections to prevent contamination.
8. Drain the oil from the receiver-dryer into a graduated container. Record the amount of oil drained.
9. Discard the used oil.

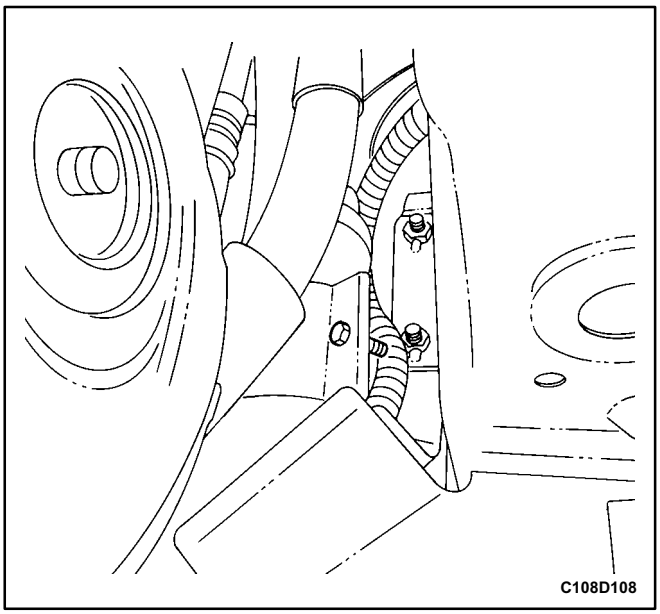

Installation Procedure

Important: Do not uncap the new receiver-dryer until just prior to installation.

1. Add the new oil to the new receiver-dryer. Use the exact amount of oil that you drained from the old receiver-dryer.
2. Install new O-rings onto the two pipes that connect to the receiver-dryer.
3. Install the receiver-dryer into the band clamp. Support the receiver-dryer to condenser pipe while pushing the receiver-dryer upward until the pipe is fully installed.
4. Tighten the bolt on the band clamp.

Tighten

Tighten the band clamp bolt to 5 N•m (44 lb•in).

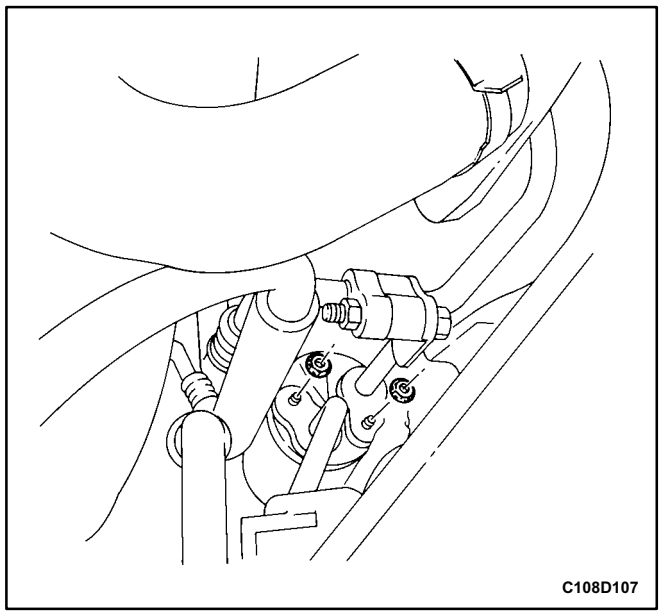

5. Install the high-pressure pipe into the receiver-dryer.
6. Install the high-pressure pipe to receiver-dryer connecting block nut.

Tighten

Tighten the high-pressure pipe to receiver-dryer connecting block nut and the receiver-dryer to condenser pipe nut to 10 N•m (89 lb•in).

7. Evacuate and recharge the A/C system. Refer to „Discharging, Adding Oil, Evacuating, and Charging Procedures for A/C System" in this section.

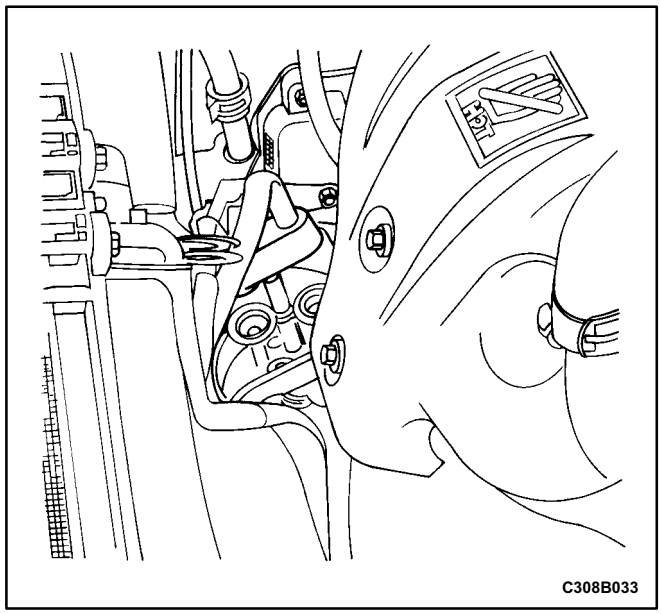

COMPRESSOR

Removal Procedure

1. Disconnect the negative battery cable.
2. Discharge and recover the refrigerant. Refer to „Discharging, Adding Oil, Evacuating, and Charging Procedures for A/C System" in this section.
3. Remove the discharge hose mounting nut.
4. Lift the discharge hose mounting block and the suction hose from the compressor.

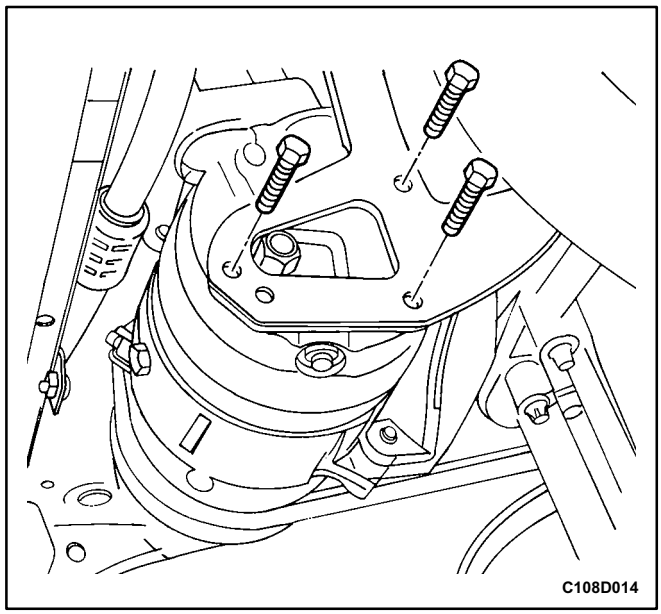

5. Raise and suitably support the vehicle.
6. Disconnect the electrical connector at the compressor.
7. Remove the drive belt and the idler pulley. Refer to *Section 6B, Power Steering Pump.*
8. Remove the front and the rear compressor to bracket bolts.
9. Remove the compressor.
10. Drain the oil from the compressor into a container. Measure the amount of the oil that is drained. Then discard the used oil.

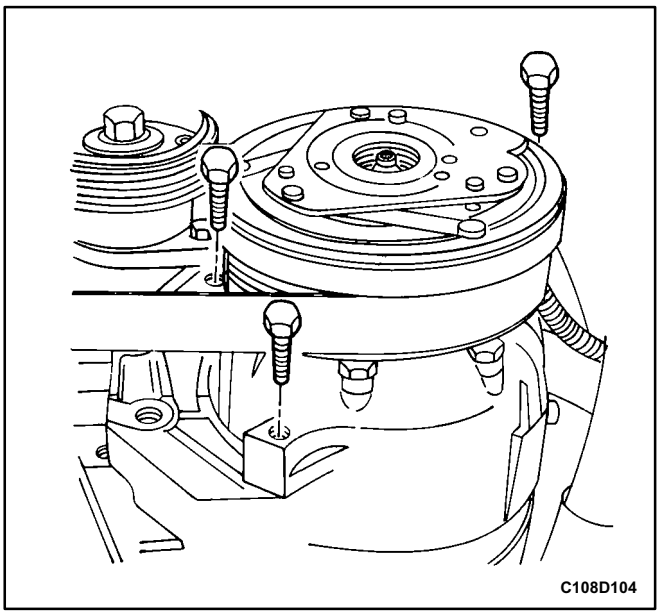

Installation Procedure

1. Add oil to the new compressor. Use the exact amount of oil that you drained from the old compressor.
2. Install the compressor.
3. Install the compressor to bracket mounting bolts.

Tighten

Tighten the front compressor to bracket mounting bolts to 35 N•m (26 lb•ft).

Tighten the rear compressor to bracket mounting bolts to 20 N•m (15 lb•ft).

4. Install the idler pulley and the serpentine accessory drive belt. Refer to *Section 6B, Power Steering Pump.*

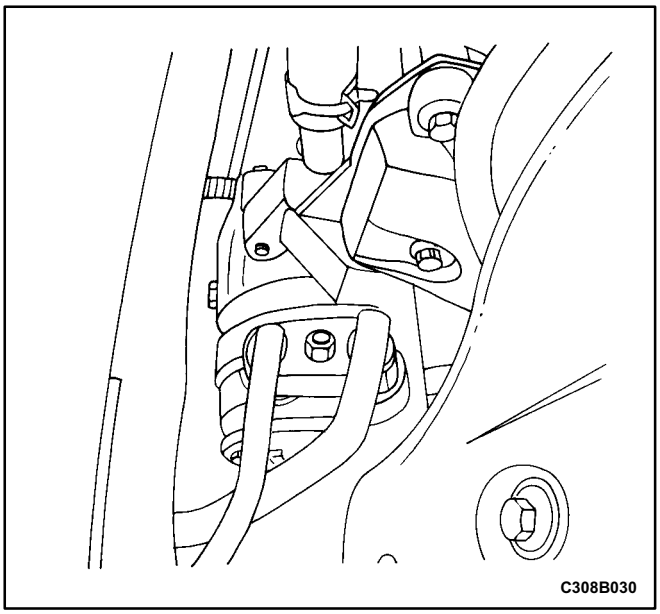

5. Install new sealing washers to the suction hose and the discharge hose mounting.
6. Connect the electrical connector at the compressor.
7. Lower the vehicle.
8. Place the suction hose into its cavity in the compressor and install the discharge hose mounting block to clamp it into place. Hold this all together while tightening the retaining nut.

Tighten

Tighten the discharge hose connecting block to compressor retaining nut to 33 N•m (24 lb•ft).

9. Connect the negative battery cable.
10. Evacuate and recharge the A/C system. Refer to „Discharging, Adding Oil, Evacuating, and Charging Procedures for A/C System" in this section.

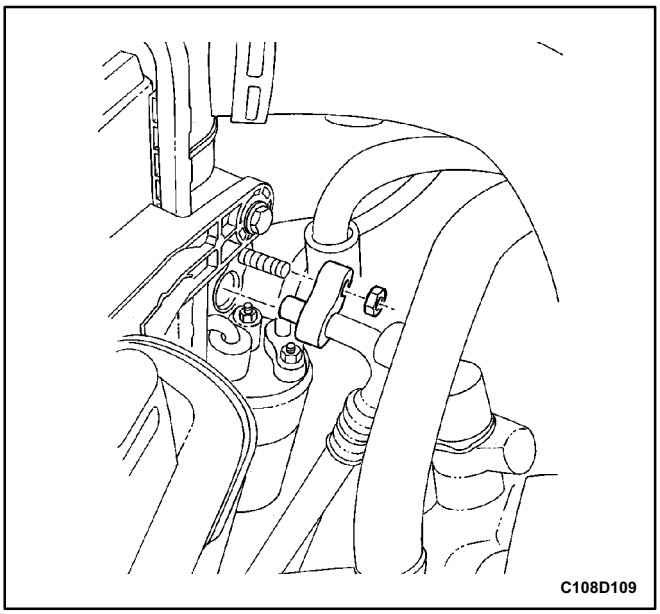

CONDENSER

Removal Procedure

1. Disconnect the negative battery cable.
2. Discharge and recover the refrigerant. Refer to „Discharging, Adding Oil, Evacuating, and Charging Procedures for A/C System" in this section.
3. Remove the radiator. Refer to *Section 1D, Engine Cooling.*
4. Remove the discharge hose connecting block to condenser retaining nut.
5. Remove the hose from the condenser.

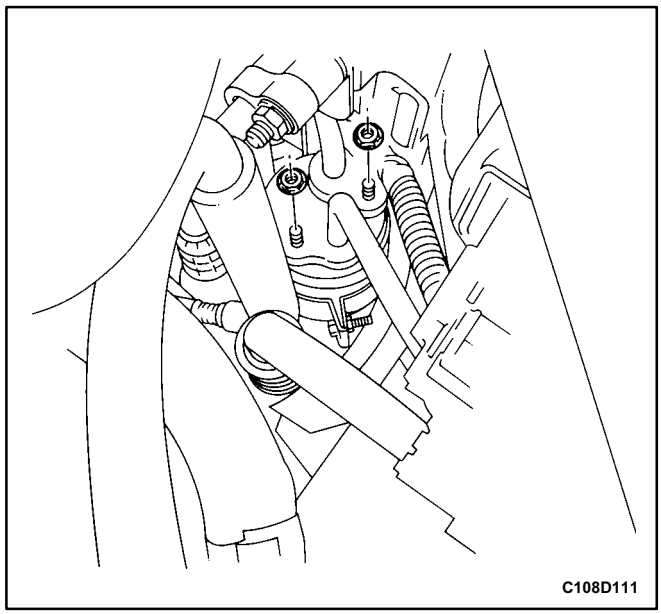

6. Remove the high pressure pipe to receiver-dryer connecting block nut.
7. Remove the pipe from the receiver-dryer.

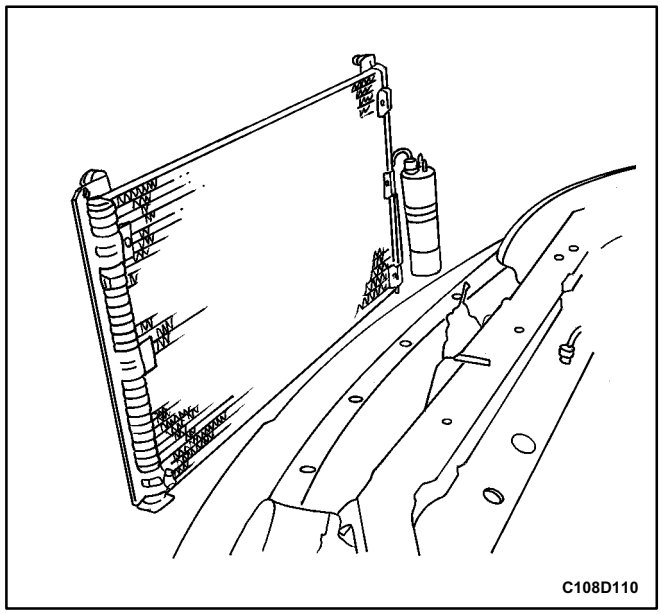

8. Remove the upper condenser mount nuts.
9. Tilt the condenser to the rear, away from the radiator mount support.
10. Lift the condenser up and out of the engine compartment.
11. Cap all the open lines and the fittings to prevent contamination.

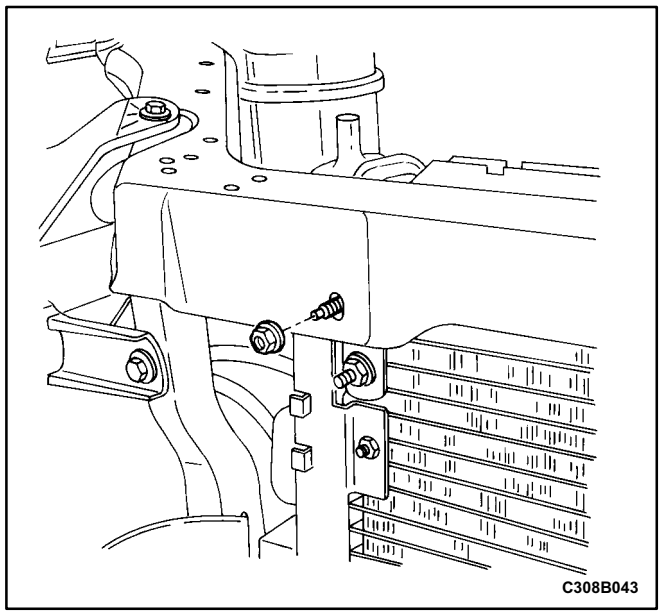

Installation Procedure

1. Make sure the condenser rubber mounts are in place.
2. Install the condenser into the vehicle. The lower mount shock protectors must fit into the holes provided.
3. Move the condenser forward into the radiator support mount holes.
4. Install the upper condenser mount nuts and the washers.

Tighten

Tighten the upper condenser mount nuts to 4 N•m (35 lb•in).

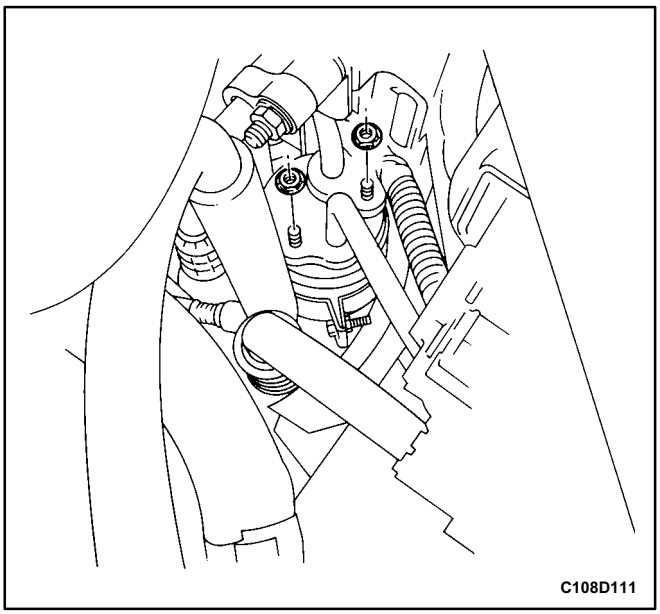

5. Install a new O-ring onto the high-pressure pipe mounting block fitting on the receiver-dryer.
6. Install the high-pressure pipe into the receiver-dryer.
7. Install the high-pressure pipe to receiver-dryer connecting block nut.

Tighten

Tighten the high-pressure pipe to receiver-dryer connecting block nut to 10 N•m (89 lb•in).

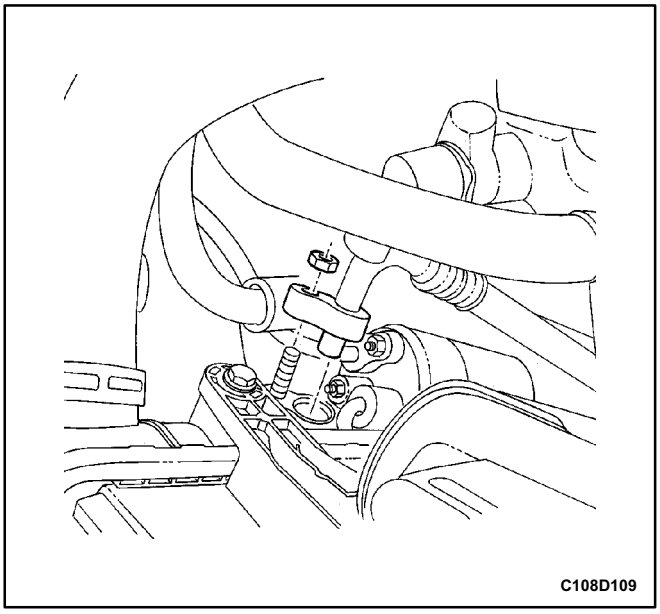

8. Install a new O-ring onto the discharge hose connecting block fitting.
9. Install the discharge hose fitting into the condenser.
10. Install the discharge hose connecting block to condenser retaining nut at the condenser connecting block.

Tighten

Tighten the discharge hose connecting block to condenser nut to 16 N•m (12 lb•ft).

11. Install the radiator. Refer to *Section 1D, Engine Cooling.*
12. Evacuate and recharge the A/C system. Refer to „Discharging, Adding Oil, Evacuating, and Charging Procedures for A/C System" in this section.
13. Connect the negative battery cable.
14. Operate the HVAC control to verify the proper function of the heating and cooling systems.

UNIT REPAIR

COMPONENT LOCATOR

V5 COMPRESSOR

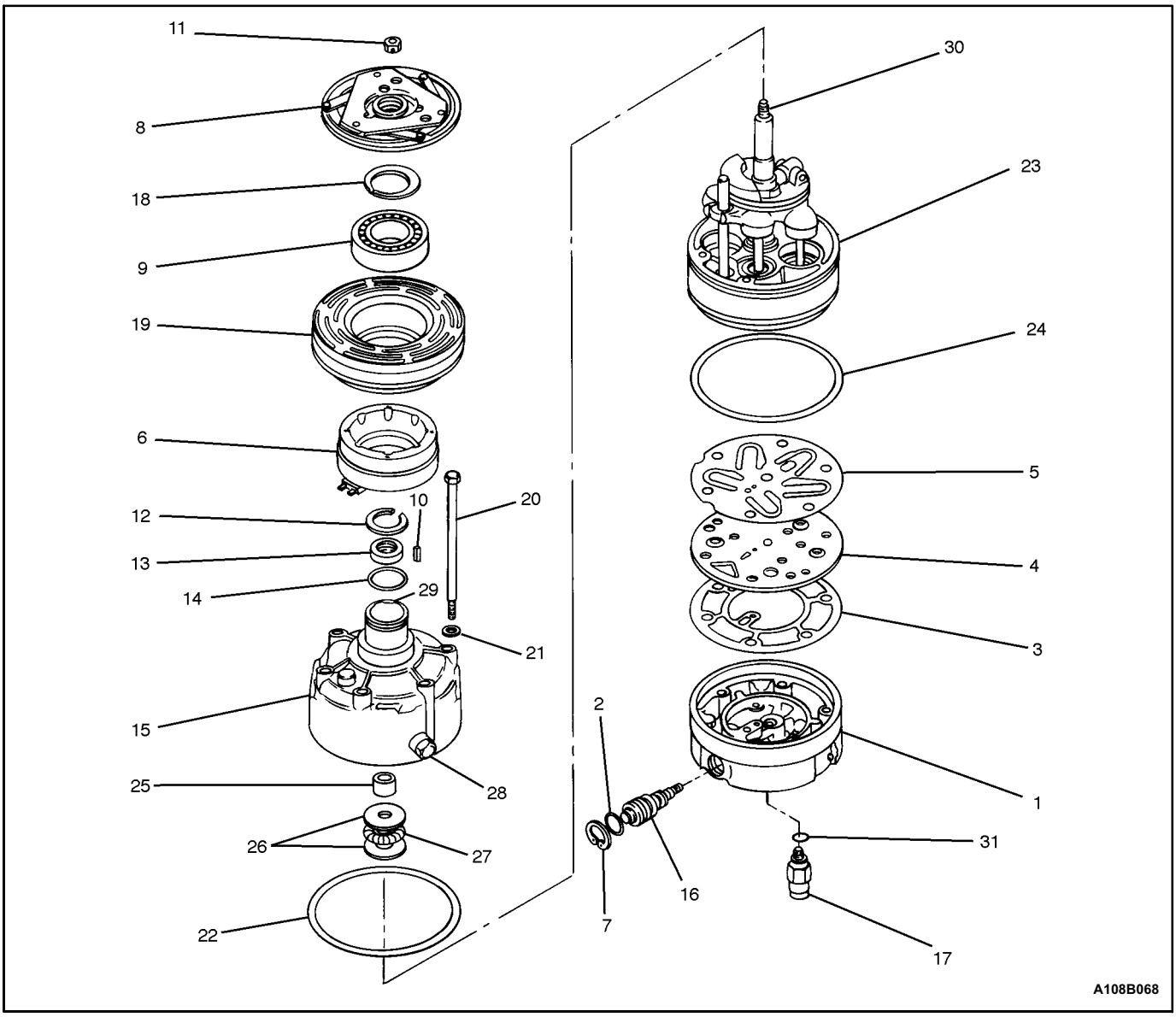

1 Rear Head Compressor
2 Control Valve O-Ring
3 Rear Head Gasket
4 Valve Plate
5 Suction Reed
6 Clutch Coil
7 Retaining Ring
8 Drive Plate Clutch
9 Pulley Bearing
10 Clutch Hub Key
11 Shaft Nut
12 Seal Retaining Ring
13 Shaft Lip Seal
14 Shaft Seal O-Ring
15 Compressor Housing
16 Compressor Control Valve
17 Pressure Relief Valve
18 Pulley Bearing to Head Retaining Ring
19 Rotor Pulley
20 Through Bolt
21 Through Gasket
22 Compressor Housing to Cylinder O-Ring
23 Shaft and Guide Pin Assembly Cylinder
24 Rear Head O-Ring
25 Thrust Washer
26 Race
27 Bearing
28 Oil Drain Plug
29 Clutch and Hub Keyway
30 Compressor Shaft
31 Pressure Relief Valve O-Ring

V5 AIR CONDITIONING COMPRESSOR OVERHAUL

CLUTCH PLATE AND HUB ASSEMBLY

Tools Required

J-33013-B Hub and Drive Plate Remover/Installer

J-33022 Shaft Nut Socket

J-33027 Clutch Hub Holding Tool

J-34992 Compressor Holding Fixture

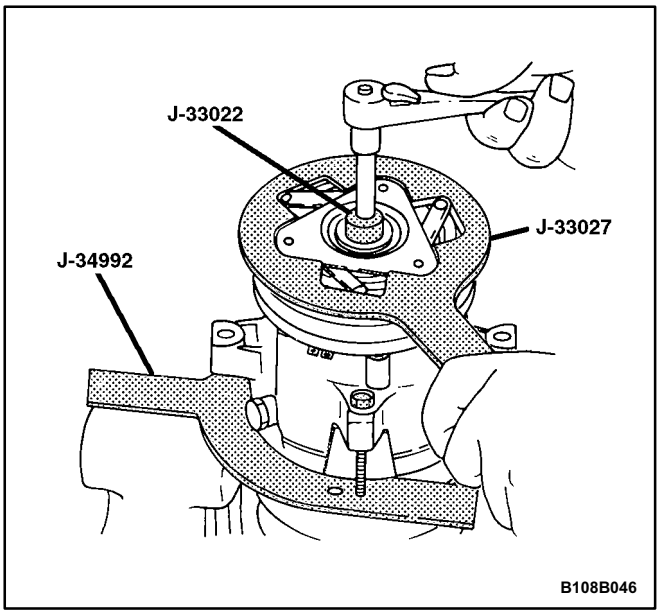

Disassembly Procedure

1. Remove the compressor. Refer to „Compressor" in this section.
2. Install the compressor holding fixture J-34992 to the compressor and hold the compressor holding fixture using a bench vise.
3. Use the clutch hub holding tool J-33027 to keep the clutch drive plate and the hub assembly from turning.
4. Remove the shaft nut using the shaft nut socket J-33022.

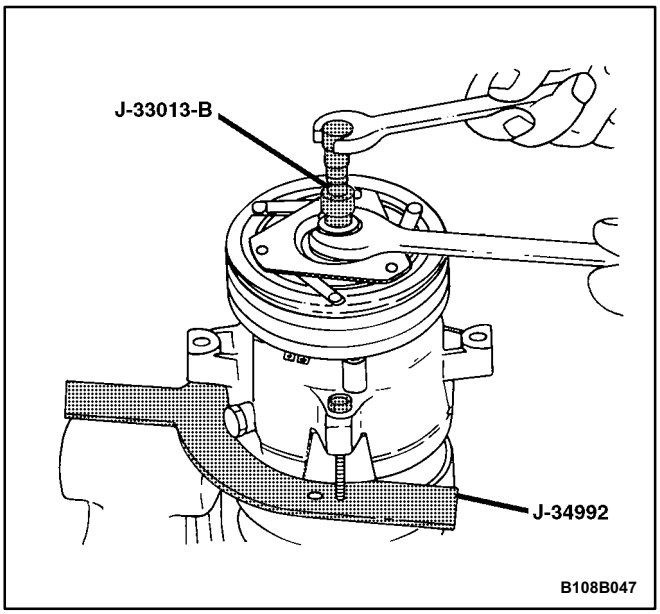

5. Thread the hub and drive plate remover J-33013-B into the hub. Hold the body of the remover with a wrench and turn the center screw into the remover body to remove the clutch drive plate and the hub assembly.
6. Remove the clutch hub key. Retain the key for assembly.

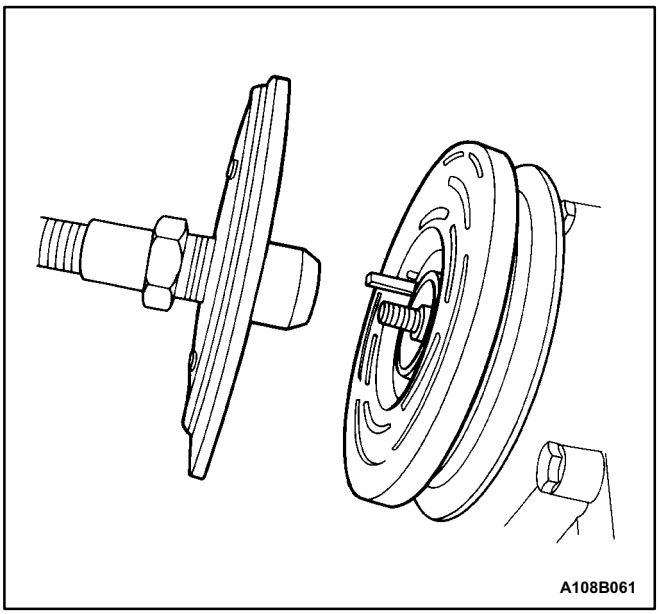

Assembly Procedure

1. Install the clutch hub key into the hub keyway. Allow the key to project approximately 3.2 mm (1/8 inch) out of the keyway. The hub key is curved slightly to provide an interference fit in the hub key groove.
2. Be sure the frictional surface of the clutch plate and the pulley rotor are clean before installing the clutch drive plate and the hub assembly.

Notice: Do not drive or pound on the clutch hub or the shaft. Internal damage to the compressor may result.

3. Align the clutch hub key with the shaft keyway. Place the clutch drive plate and the hub assembly onto the compressor shaft.

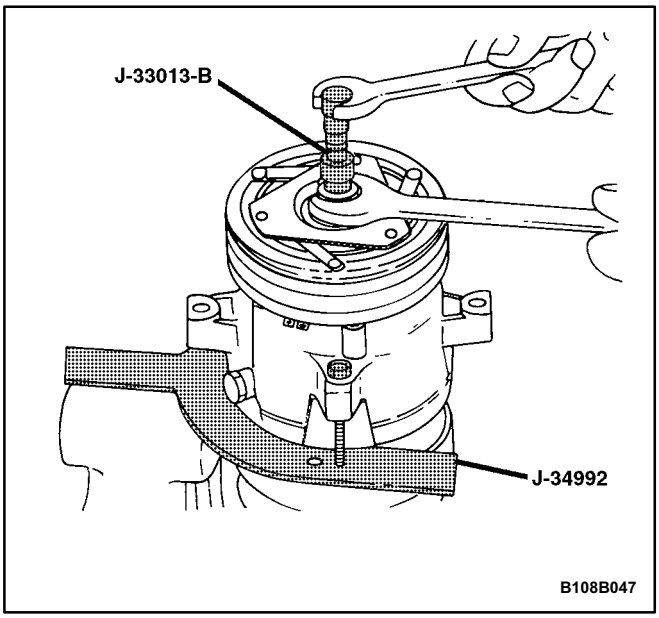

4. Remove the hub and drive plate remover/installer J-33013-B center bolt and reverse the body direction on the center bolt. The body of the hub and drive plate remover/installer J-33013-B should be backed off sufficiently to allow the center bolt to be threaded onto the end of the compressor shaft.

Notice: If the center bolt is threaded fully onto the end of the compressor shaft, or if the body of the hub and drive plate remover/installer J-33013-B is held and the center bolt is rotated, the key will wedge and could break the clutch drive plate and the hub assembly.

5. Install the hub and drive plate remover/installer J-33013-B and the bearing onto the clutch drive plate. Thread the center bolt onto the compressor shaft.
6. Hold the center bolt with a wrench. Tighten the hex portion of the hub and drive plate remover/installer J-33013-B body to press the hub onto the shaft. Tighten the body several turns.
7. Remove the hub and drive plate remover/installer J-33013-B and check to see that the clutch hub key is still in place in the keyway before installing the clutch drive plate and the hub assembly to its final position. The air gap between frictional surfaces of the clutch drive plate and the clutch pulley rotor should be 0.38 to 0.64 mm (0.015 to 0.025 inch.).

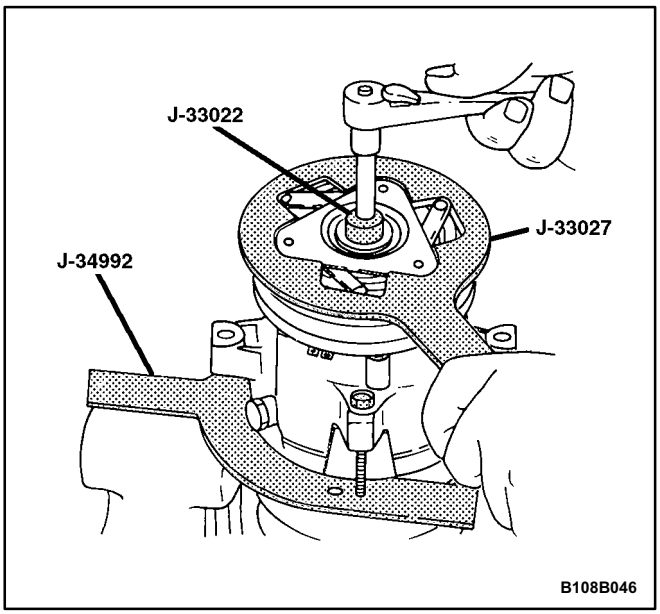

8. Remove the hub and drive plate remover/installer J-33013-B. Check for proper positioning of the clutch hub key. It should be even or slightly above the clutch hub.
9. Install the shaft nut. Hold the clutch drive plate and the hub assembly with the clutch hub holding tool J-33027. Use the shaft nut socket J-33022 and tighten the nut against the compressor shaft shoulder.

Tighten

Tighten the clutch plate and hub assembly retaining nut to 17 N•m (13 lb•ft).

10. Spin the pulley rotor by hand to verify that the pulley is not rubbing the clutch drive plate.
11. Remove the compressor from the bench vise and remove the J-34992 compressor holding fixture from the compressor.
12. Install the compressor. Refer to „Compressor" in this section.

CLUTCH ROTOR AND BEARING

Tools Required

J-6083 Snap Ring Pliers

J-9398-A Bearing Remover

J-9481 Bearing Installer

J-33020 Pulley Puller

J-33023-A Puller Pilot

J-33019 Bearing Staking Tool Set
Includes: J-33019-1 Bearing Staking Guide
J-33019-2 Bearing Staking Pin

J-33017 Pulley Rotor and Bearing Installer

J-8433-1 Puller Crossbar

J-34992 Compressor Holding Fixture

J-8092 Driver Handle

J-8433-3 Forcing Screw

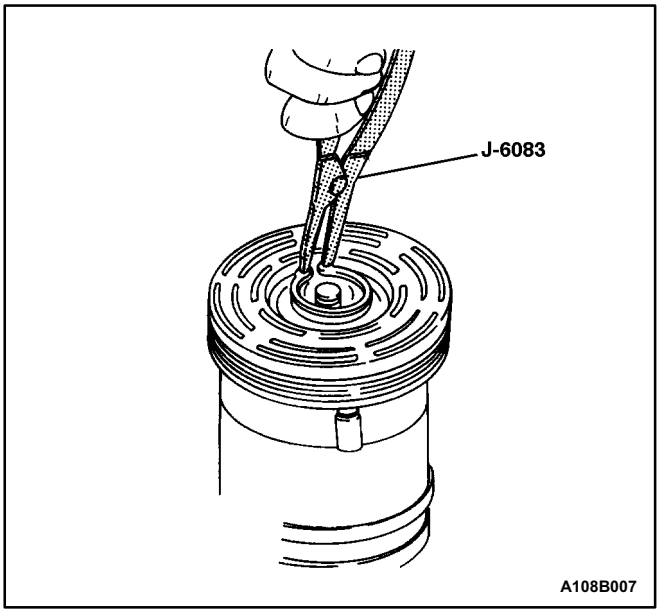

Disassembly Procedure

1. Disconnect the negative battery cable.
2. Recover the refrigerant. Refer to „Discharging, Adding Oil, Evacuating, and Charging for A/C System" in this section.
3. Remove the compressor. Refer to „Compressor" in this section.
4. Remove the clutch drive plate and hub assembly. Refer to „Clutch Plate and Hub Assembly" in this section.
5. Remove the pulley rotor and bearing assembly retaining ring using the snap ring pliers J6083.

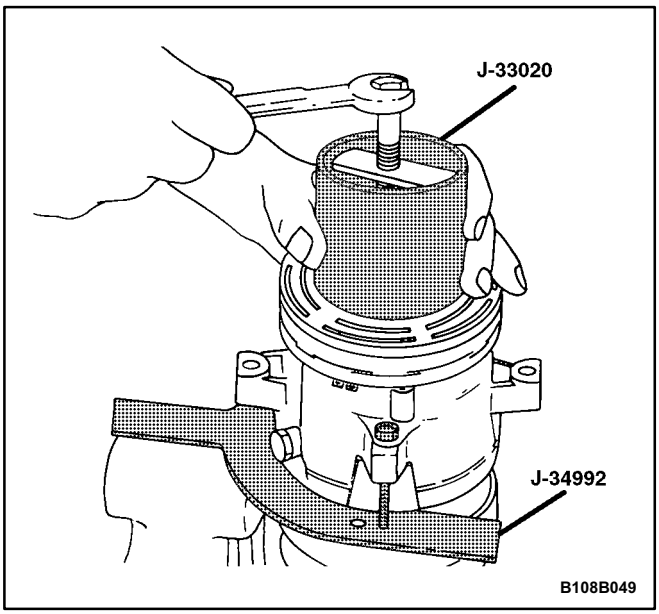

6. With the compressor mounted to the compressor holding fixture J-34992, install the pulley puller J-33020 into the inner circle of slots in the pulley rotor. Turn the pulley puller J-33020 clockwise in the slots to engage the puller tangs with the segments between the slots in the rotor.
7. Hold the pulley puller J-33020 in place and tighten the puller bolt against the compressor shaft to remove the pulley rotor and bearing assembly.

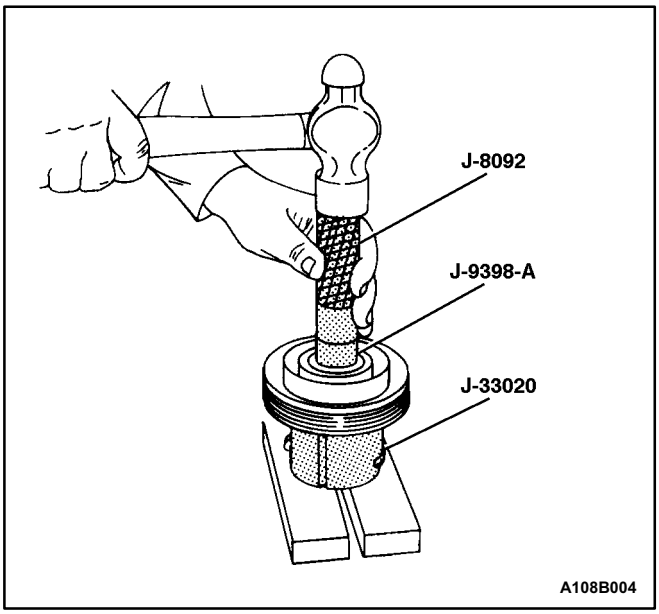

Notice: The rotor hub must be properly supported to prevent damage to the pulley rotor during bearing removal.

8. Remove the puller bolt from the pulley puller J-33020. With the puller tangs still engaged in the rotor slots, invert the assembly onto a solid flat surface or blocks.

Notice: It is not necessary to remove the staking in front of the bearing to remove the bearing. It will be necessary to file away the old stake metal for proper clearance for the new bearing to be installed into the rotor bore or the bearing may be damaged.

9. Drive the bearing out of the rotor hub with the bearing remover J-9398-A and the driver handle J-8092.

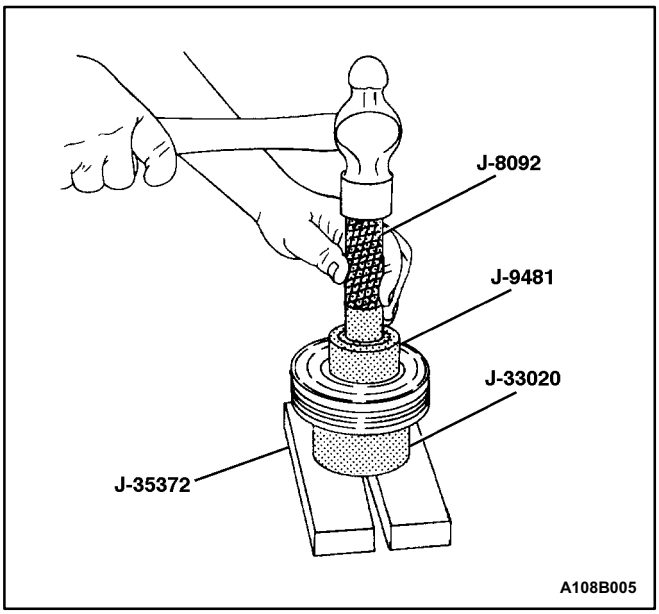

Installation Procedure

Notice: Do not support the rotor by resting the pulley rim on a flat surface during the bearing installation or the rotor face could be damaged.

1. Invert the pulley rotor and place it on a support block to fully support the rotor hub during bearing installation.
2. Align the new bearing squarely in the pulley bore. Use the bearing installer J-9481 and the driver handle J-8092, drive the bearing fully into the pulley bore.

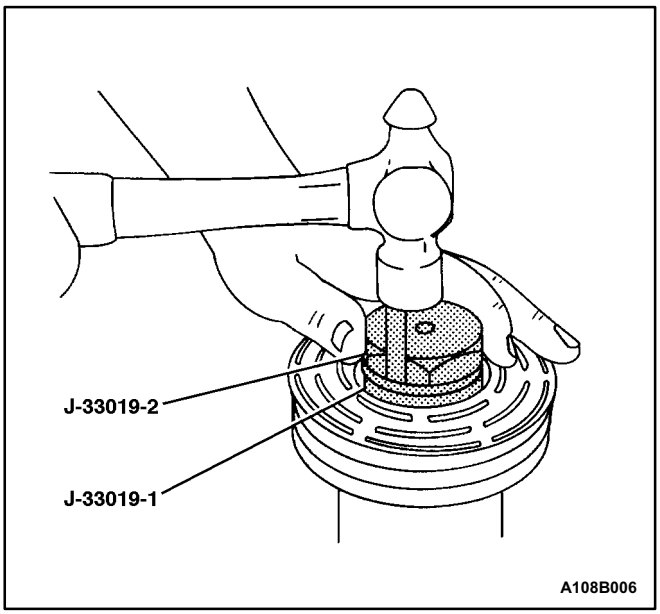

3. Place the bearing staking guide J-33019-1 and the bearing staking pin J-33019-2 in the rotor hub core. Shift the rotor and bearing assembly on the block to give full support to the hub under the staking pin. A heavy duty rubber band may be used to hold the staking tool pin in the guide. The pin should be properly positioned in the guide after each impact on the pin.

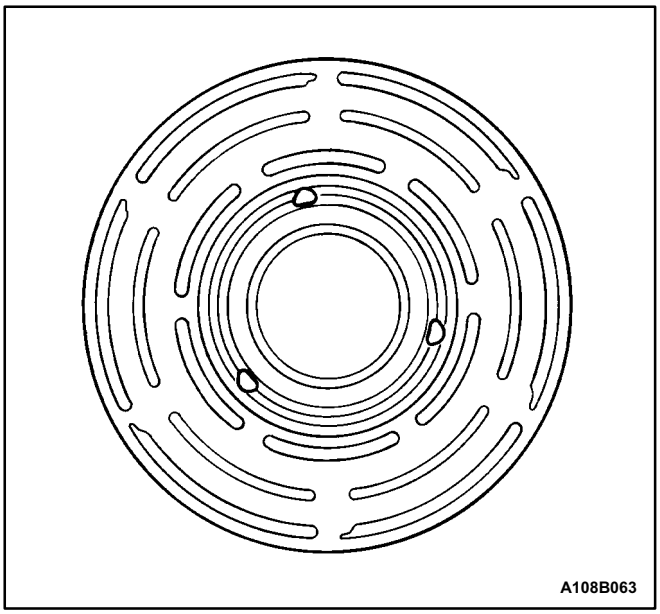

Caution: When striking the pin with a hammer, take care to avoid personal injury.

4. Strike the pin with a hammer until a metal stake, similar to the original, is formed down to, but not touching, the bearing. The metal stake should not contact the outer race of the bearing to avoid the possibility of distorting the outer race. Stake in three places 120 degrees apart.

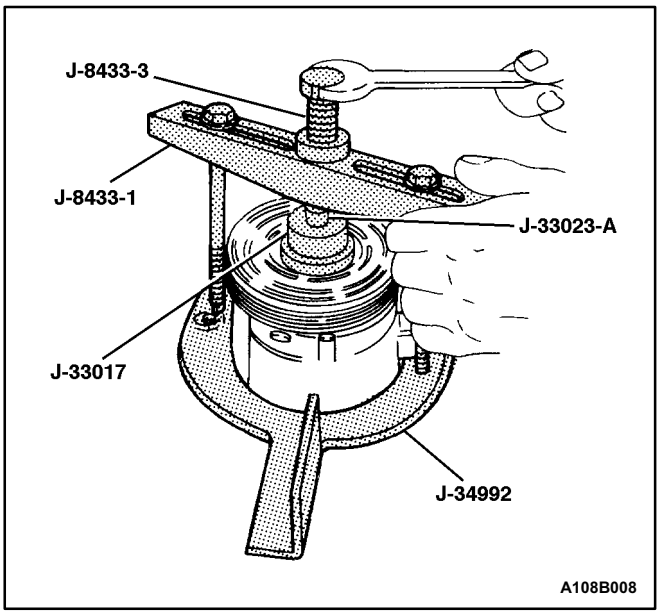

5. With the compressor mounted to the holding fixture J-34992, position the rotor and bearing assembly on the compressor housing.
6. Position the pulley rotor and bearing installer J-33017 and the puller pilot J-33023-A directly over the inner race of the bearing.
7. Position the puller crossbar J-8433-1 center forcing bolt on the puller pilot J-33023-A and assemble the two throughbolts and the washers through the slots on the puller crossbar J-8433-1. Thread the through bolts into the holding fixture J-34992. The thread of the through bolts should engage the full thickness of the fixture.
8. Tighten the center forcing screw J-8433-3 in the puller crossbar J-8433-1 to force the pulley rotor and bearing assembly onto the compressor housing.

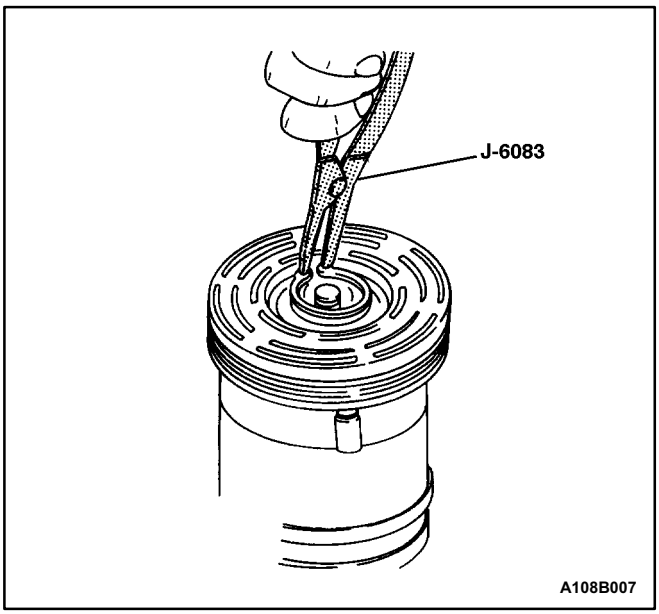

9. Install the rotor and bearing assembly retainer ring using the snap ring pliers J-6083.
10. Reinstall the clutch drive plate and hub assembly. Refer to „Clutch Plate and Hub Assembly" in this section.
11. Install the compressor. Refer to „Compressor" in this section.
12. Connect the negative battery cable.
13. Evacuate and recharge the A/C system. Refer to „Discharging, Adding Oil, Evacuating, and Charging Procedures for A/C System" in this section.

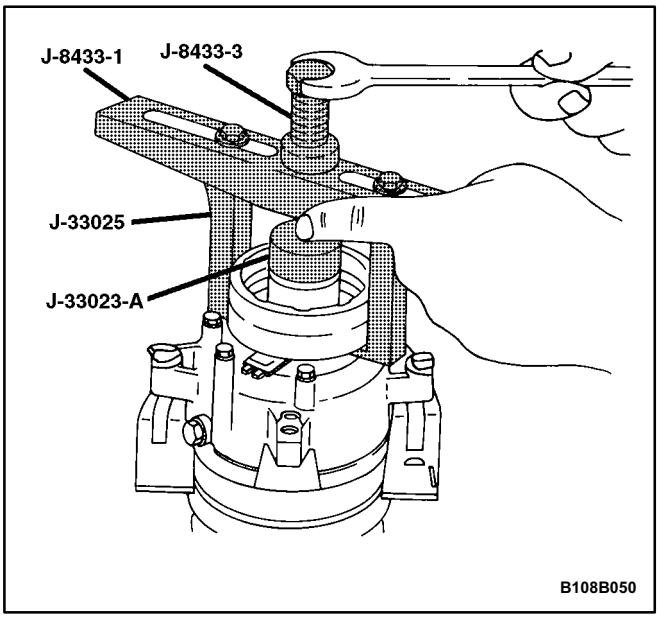

CLUTCH COIL

Tools Required

J-8433-1 Puller Crossbar

J-8433-3 Forcing Screw

J-33023-A Puller Pilot

J-33024 Clutch Coil Installer Adapter

J-33025 Clutch Coil Puller Legs

J-34992 Compressor Holding Fixture

Removal Procedure

1. Disconnect the negative battery cable.
2. Recover the refrigerant. Refer to „Discharging, Adding Oil, Evacuating, and Charging Procedures for A/C System" in this section.
3. Remove the compressor. Refer to „Compressor" in this section.
4. Remove the clutch plate and hub assembly. Refer to „Clutch Plate and Hub Assembly" in this section.
5. Remove the clutch rotor and bearing. Refer to „Clutch Rotor and Bearing" in this section.
6. Mark the clutch coil terminal location on the compressor housing.
7. Install the puller pilot J-33023-A on the compressor housing. Also install the puller cross bar J-8433-1 with the clutch coil puller legs J-33025.
8. Tighten the forcing screw J-8433-3 against the puller pilot J-33023-A to remove the clutch coil.

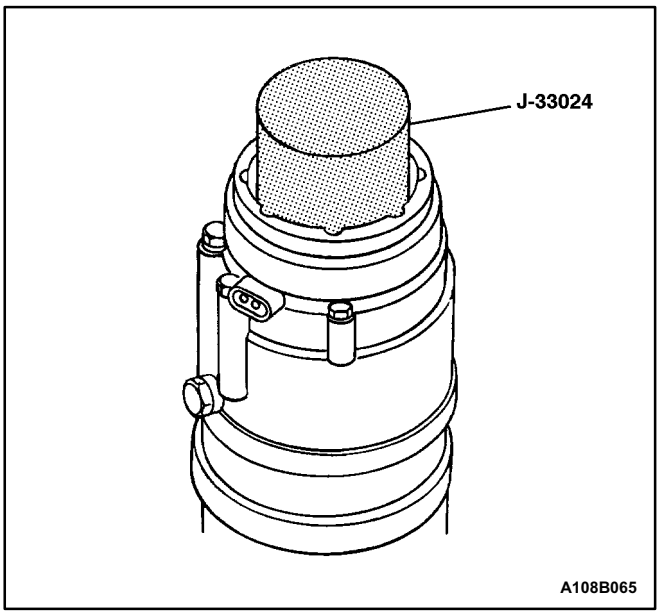

Installation Procedure

1. Place the clutch coil assembly on the compressor housing with the terminals positioned at the „marked" location.
2. Place the clutch coil installer adapter J-33024 over the internal opening of the clutch coil housing and align the clutch coil installer adapter J-33024 with the compressor housing.

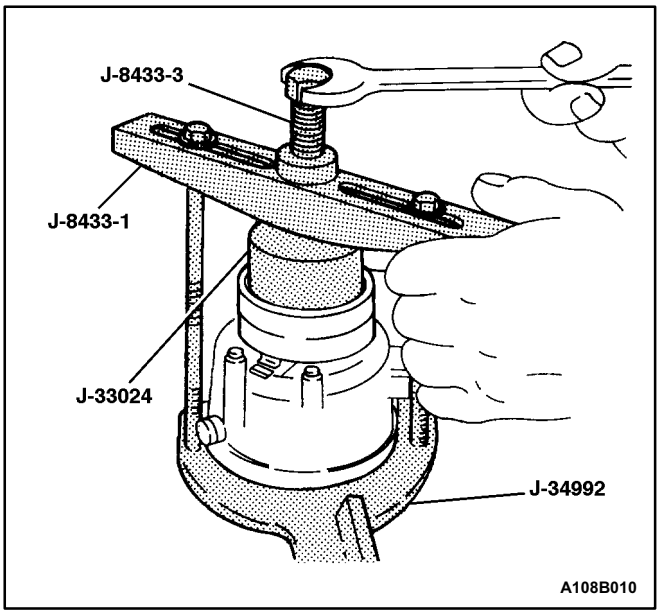

3. Center the puller crossbar J-8433-1 in the countersunk center hole of the clutch coil installer adapter J-33024. Install the throughbolts of the compressor holding fixture J-34992 and the washers in the crossbar slots. Thread them into the holding fixture to the full thickness of the holding fixture.

Important: Be sure the clutch coil and the installer stay „in-line" during installation.

4. Turn the forcing screw J-8433-3, or use a suitable vise, to force the clutch coil onto the compressor housing.

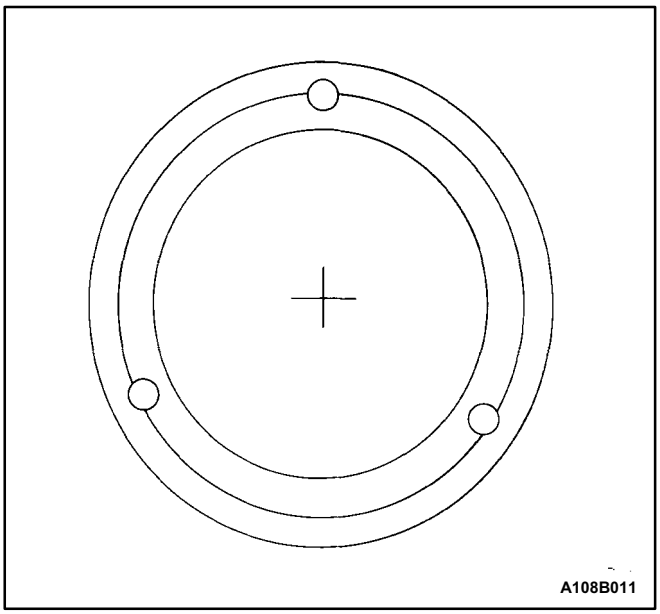

5. When the clutch coil is fully seated on the compressor housing, use a 3 mm (1/8 inch) diameter drift punch and stake the housing at three places, 120 degrees apart, to ensure that the clutch coil will remain in position. Stake point size should be only one-half the area of the punch tip and approximately 0.28 to 0.35 mm (0.010 to 0.015 inch) deep.
6. Install the clutch rotor and bearing assembly. Refer to „Clutch Rotor and Bearing„ in this section.
7. Install the clutch plate and hub assembly. Refer to „Clutch Plate and Hub Assembly" in this section.
8. Install the compressor. Refer to „Compressor" in this section.
9. Connect the negative battery cable.
10. Evacuate and recharge the A/C system. Refer to „Discharging, Adding Oil, Evacuating, and Charging Procedures for A/C System" in this section.

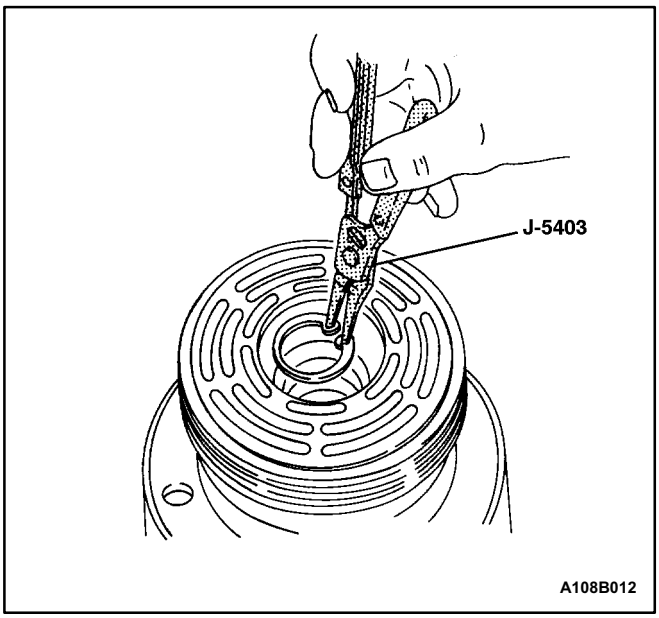

SHAFT SEAL REPLACEMENT

Tools Required

J-5403 Snap Ring Pliers

J-9553-1 O-Ring Remover

J-23128-A Seal Seat Remover/Installer

J-33011 O-Ring Installer

J-34614 Shaft Seal Protector

Important: A shaft seal should not be replaced because a small amount of oil is found on the adjacent surface. The seal is designed to leak some oil for lubrication purposes. A shaft seal should be changed only when a large amount of sprayed oil is found and then only after actual refrigerant leakage is found by using an approved leak detection procedure. Refer to „Leak Testing the Refrigerant System" in this section.

Should a compressor shaft seal ever have to be replaced, the receiver-dryer in this system must also be removed from the vehicle. The oil in the receiver-dryer must then be drained, measured and replaced. Refer to „Discharging, Adding Oil, Evacuating, and Charging Procedures for A/C System" in this section.

Removal Procedure

1. Disconnect the negative battery cable.
2. Recover the refrigerant. Refer to „Discharging, Adding Oil, Evacuating, and Charging Procedures for A/C System" in this section.
3. Loosen and reposition the compressor in the mounting brackets.
4. Remove the clutch drive plate and hub assembly from the compressor. Refer to „Clutch Plate and Hub Assembly" in this section.
5. Use the snap ring pliers J-5403 to remove the shaft seal retaining ring.

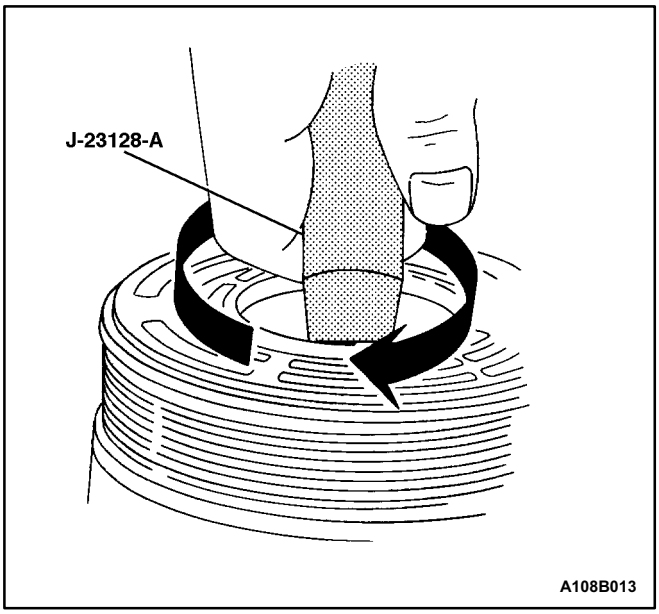

Notice: Any dirt or foreign material that enters the compressor may cause damage.

6. Thoroughly clean the inside of the compressor housing area surrounding the shaft, the exposed portion of the seal, the shaft itself, and the O-ring groove.
7. Fully engage the knurled tangs of the seal seat remover/installer J-23128-A into the recessed portion of the seal by turning the handle clockwise. Remove and discard the seal from the compressor with a rotating-pulling motion. The handle should be hand-tightened securely. Do not use a wrench or pliers to tighten the handle.

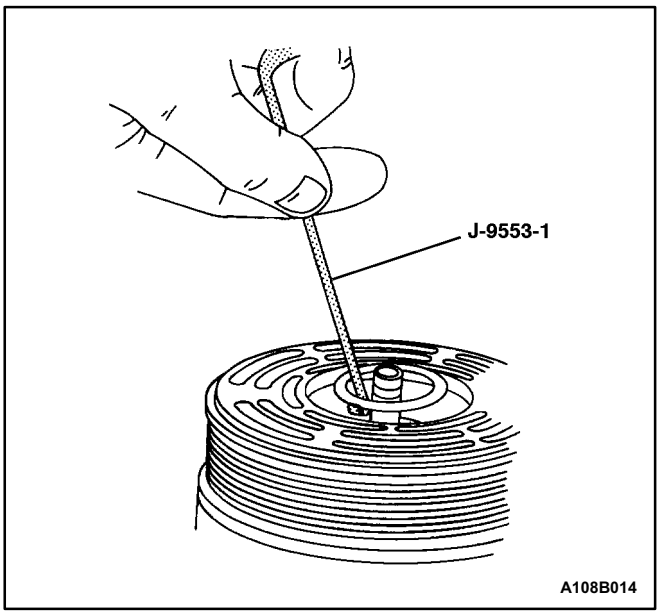

8. Remove and discard the O-ring from the compressor neck using the O-ring remover J-9553-1.
9. Thoroughly clean the seal O-ring groove in the compressor housing.
10. Inspect the shaft and the inside of the compressor housing neck for dirt or foreign material. These parts must be perfectly clean before installing any new parts.

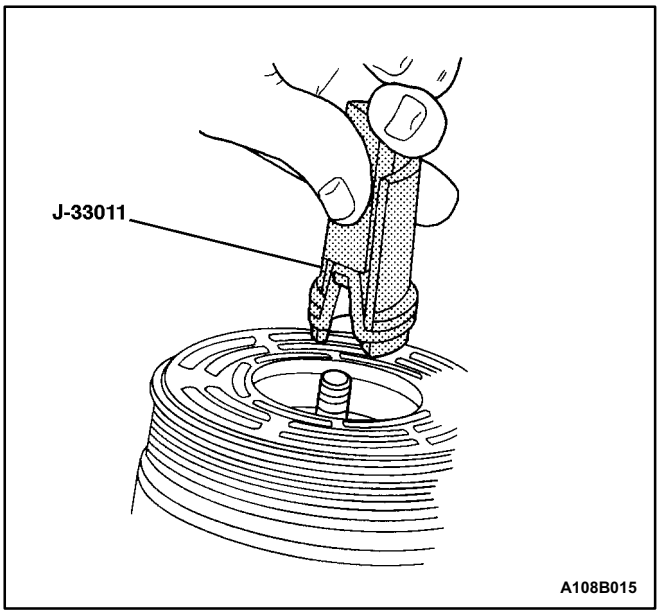

Installation Procedure

Notice: Seals must not be reused. Always use a new specification service seal kit. Be sure that the seal to be installed is not scratched or damaged in any way. The seal must be free of lint and dirt that may damage the seal surface or prevent proper sealing.

1. Dip the new seal O-ring in clean polyalkaline glycol (PAG) refrigerant oil and assemble the O-ring onto the Oring installer J-33011.
2. Insert the Oring installer J-33011 into the compressor neck until the installer „bottoms." Lower the moveable slide of the Oring installer J-33011 to release the O-ring into the seal O-ring lower groove. (The top groove of the compressor neck is for the shaft seal retainer ring.) Rotate the installer to seat the Oring and then remove the installer.

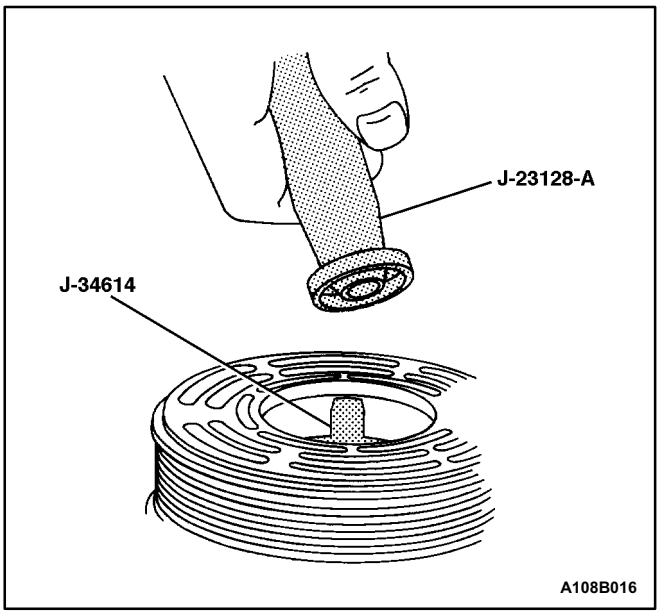

3. Attach the shaft lip seal to the seal seat remover/installer J-23128-A. Dip the seal in clean PAG oil.
4. Install the shaft seal protector J-34614 in the seal. Place it over the shaft and push the seal into place with a rotary motion.

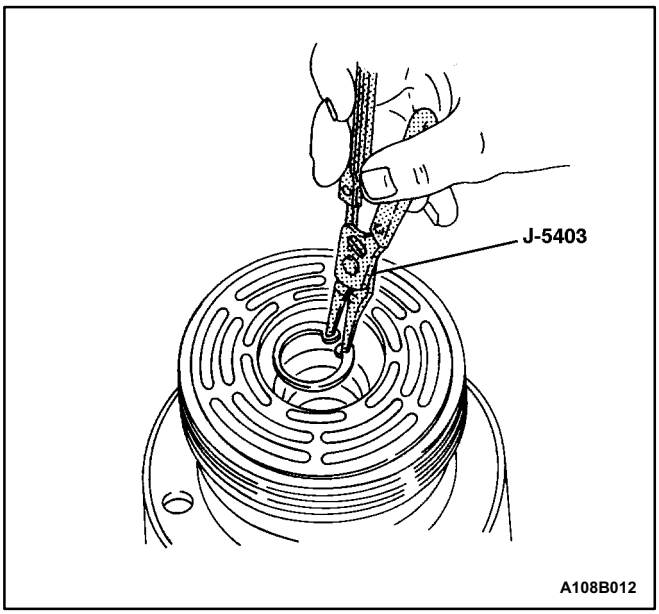

5. Use the snap ring pliers J-5403 to install the shaft seal retaining ring with its flat side against the seal.
6. Remove any excess oil around the shaft and the inside of the compressor housing neck.
7. Install the clutch plate and hub assembly. Refer to „Clutch Plate and Hub Assembly" in this section.
8. Reposition the compressor in its mounting.
9. Adjust the tension on the serpentine accessory drive belt.
10. Connect the negative battery cable.
11. Evacuate and recharge the A/C system. Refer to „Discharging, Adding Oil, Evacuating, and Charging Procedures for A/C System" in this section.
12. Perform a leak test of the system. Refer to „Leak Testing the Refrigerant System" in this section.

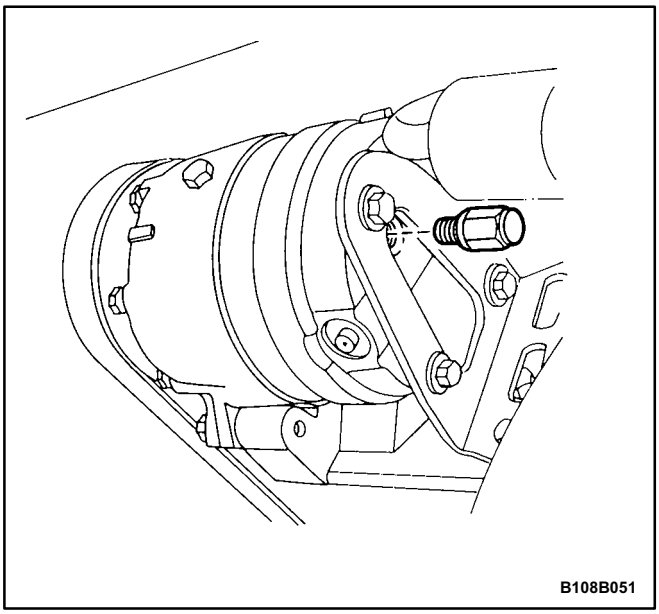

PRESSURE RELIEF VALVE

Removal Procedure

1. Recover the refrigerant. Refer to „Discharging, Adding Oil, Evacuating, and Charging Procedures for A/C System" in this section.
2. Raise the vehicle.
3. Remove the pressure relief valve.
4. Clean the valve seat area.

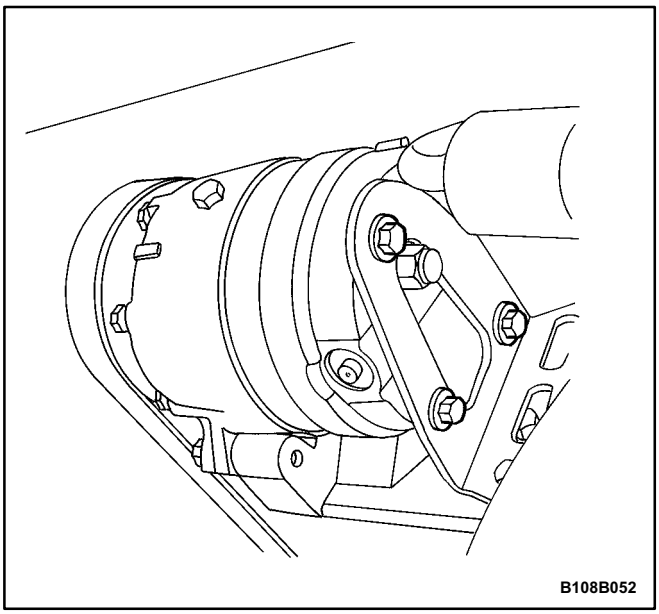

Installation Procedure

1. Lubricate the Oring of the new pressure relief valve with new polyalkaline glycol (PAG) oil.
2. Install the new valve.

   Tighten

   Tighten the pressure relief valve to 16 N•m (12 lb•ft).
3. Lower the vehicle.
4. Evacuate and recharge the system. Refer to „Discharging, Adding Oil, Evacuating, and Charging Procedures for A/C System" in this section.

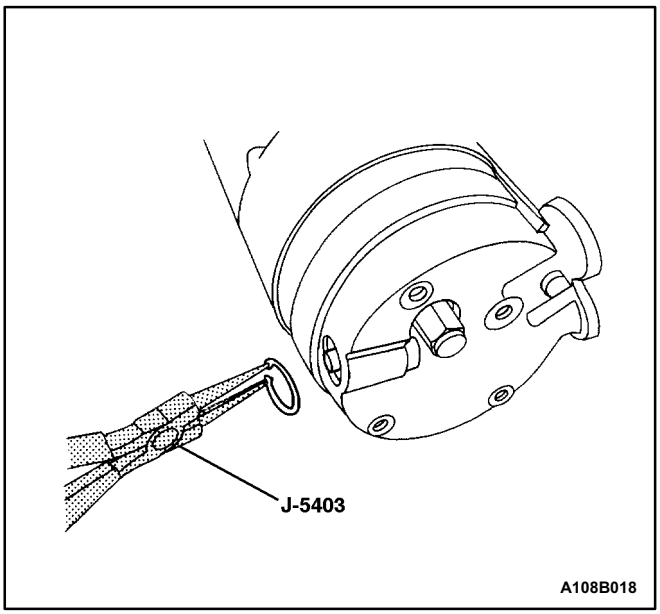

CONTROL VALVE ASSEMBLY

Tools Required

J-5403 Snap Ring Pliers

Removal Procedure

1. Recover the refrigerant. Refer to „Discharging, Adding Oil, Evacuating, and Charging Procedures for A/C System" in this section.
2. Remove the control valve retaining ring using the snap ring pliers J-5403.
3. Remove the control valve assembly.

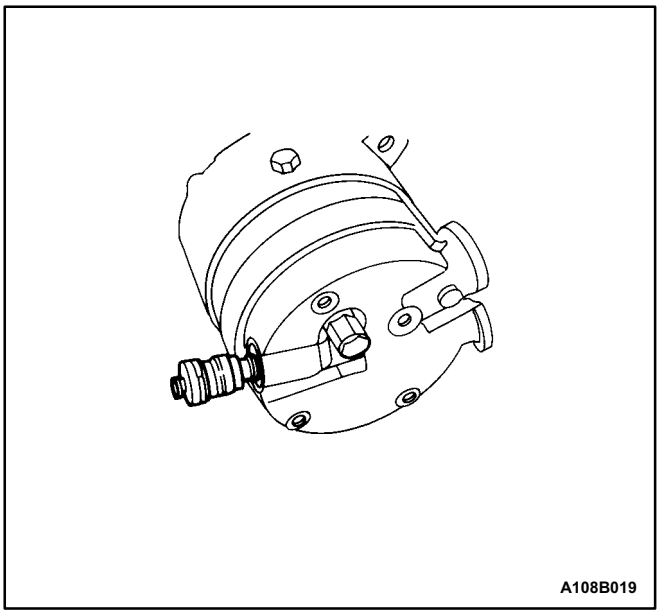

Installation Procedure

1. Coat all the O-rings with clean polyalkaline glycol (PAG) oil.
2. Push the control valve in place using thumb pressure.

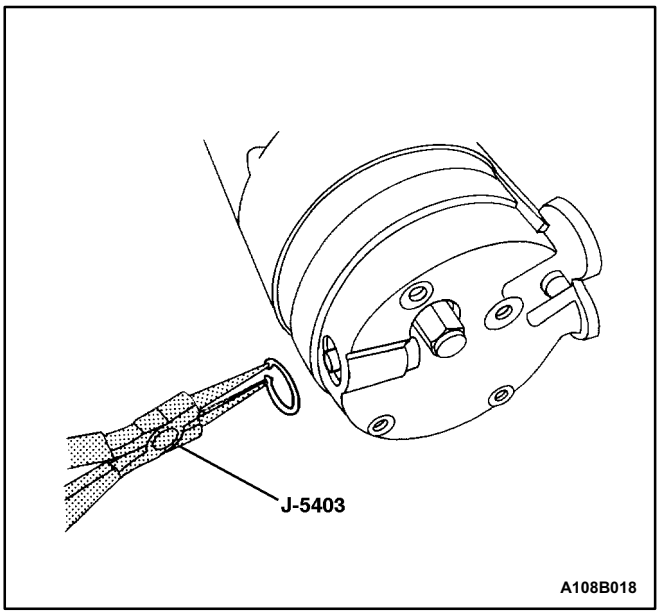

3. Use the snap ring pliers J-5403 to install the valve retaining ring. The high point of the curved sides must be against the valve housing. Be sure the retaining ring is properly seated in the ring groove.
4. Evacuate and recharge the A/C system. Refer to „Discharging, Adding Oil, Evacuating, and Charging Procedures for A/C System" in this section.

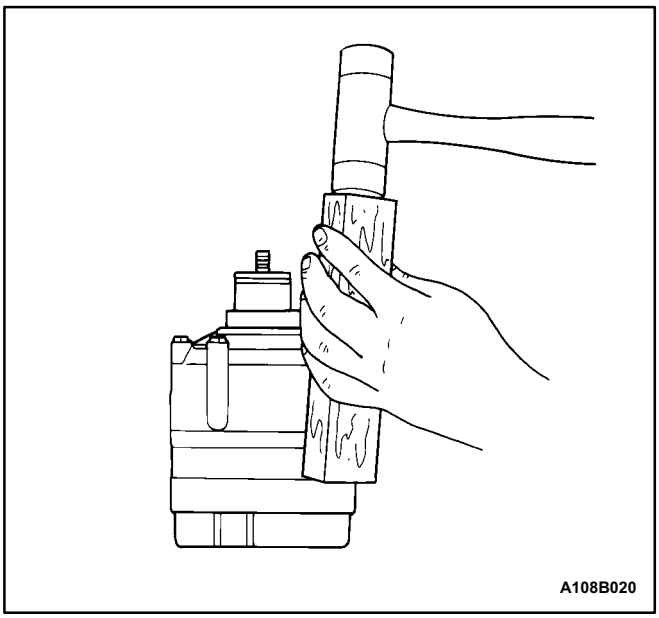

REAR HEAD, GASKET, VALVE PLATE, REED PLATE, AND ORING

Tools Required

J-34993 Cylinder Alignment Rods

Removal Procedure

1. Recover the refrigerant. Refer to „Discharging, Adding Oil, Evacuating, and Charging Procedures for A/C System” in this section.
2. Discharge the A/C system. Refer to „Discharging, Adding Oil, Evacuating, and Charging Procedures for A/C System” in this section.
3. Remove the compressor. Refer to „Compressor” in this section.
4. Drain the oil from compressor into a suitable container. Measure and record the amount of oil drained from the compressor. Discard the used oil.
5. Remove the clutch plate and hub assembly. Refer to „Clutch Plate and Hub Assembly” in this section.
6. Remove the clutch rotor and bearing. Refer to „Clutch Rotor and Bearing” in this section.
7. Remove the clutch coil. Refer to „Clutch Coil” in this section.
8. Remove the compressor through bolts. Remove and discard the gaskets.
9. Using a wooden block and a plastic headed hammer, tap around the edge of the rear head to disengage the head from the compressor cylinder. Separate the rear head, the head gasket, the rear valve plate, the suction reed plate, and the cylinder to rear head O-ring. Discard the head gasket and the O-ring.

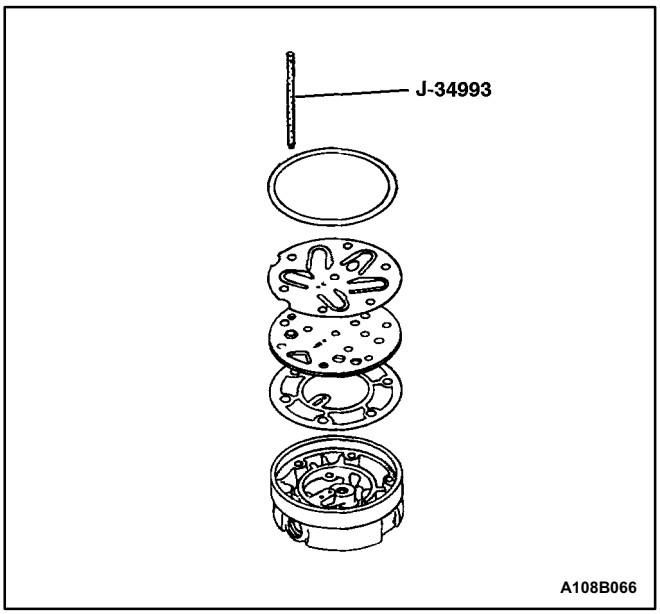

Installation Procedure

1. Place the rear head on a clean, flat surface. Position the head with the control valve at the 6 o'clock position.
2. Install the cylinder alignment rods J-34993 in the mounting holes at the 11 o'clock and the 5 o'clock positions.
3. Install the head gasket over the cylinder alignment rods J-34993 with the elongated hole at the upper left pin (the 11 o'clock position).
4. Install the rear head valve plate over the guide pins with the elongated hole at the upper left pin. Lower the rear head valve plate into place.
5. Install the suction reed plate over the cylinder alignment rods J-34993. Remove the alignment rod at the 5 o'clock position.
6. Lubricate the cylinder to the new rear head O-ring with clean polyalkaline glycol (PAG) refrigerant oil.
7. Install the O-ring in the cylinder O-ring groove. The O-ring seal surface of the head may be lubricated to ease assembly.
8. With the O-ring in place on the rear of the cylinder assembly, locate the relief boss for the compressor guide pin at the 6 o'clock position, directly above the hole in the side of the rear head. Carefully lower the cylinder and the front head assembly over the guide pin to the rear head.
9. Press the cylinder and the compressor housing assembly down onto the rear head using both hands.
10. Add the new through bolt gasket to the through-bolts and install it into the compressor assembly. Four of the through-bolts must thread into the rear head before removing the alignment rod.

Tighten

Alternately tighten the through bolts in progressive torque sequence to 10 N•m (89 lb•in).

11. Add new PAG refrigerant oil as determined in Step 1 of Removal Procedure.
12. Place the shaft nut on the shaft and rotate the compressor shaft several times.
13. Perform a leak test on the compressor. Refer to „Leak Testing (External)” in this section.
14. Install the clutch coil. Refer to „Clutch Coil” in this section.
15. Install the clutch rotor and bearing. Refer to „Clutch Rotor and Bearing” in this section.
16. Install the clutch plate and hub assembly. Refer to „Clutch Plate and Hub Assembly” in this section.
17. Install the compressor. Refer to „Compressor” in this section.
18. Evacuate and recharge the A/C system. Refer to „Discharging, Adding Oil, Evacuating, and Charging Procedures for A/C System” in this section.

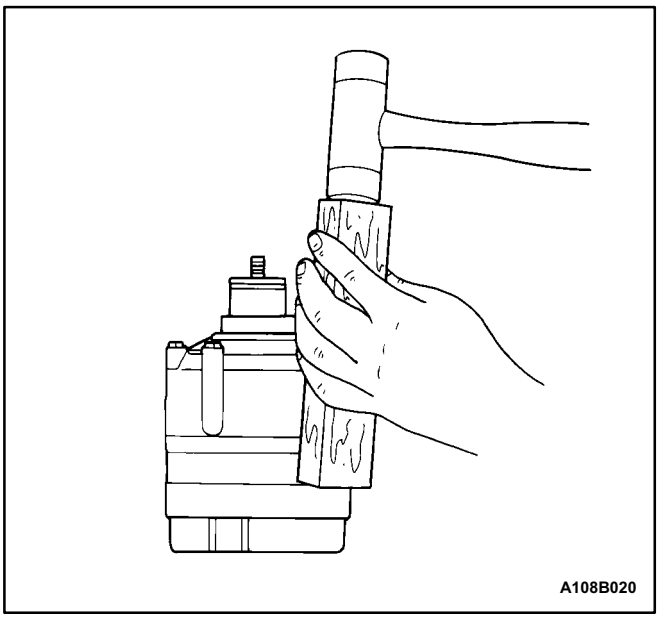

CYLINDER TO FRONT HEAD O-RING

Tools Required

J-34993 Cylinder Alignment Rods

J-35372 Support Block

Removal Procedure

1. Recover the refrigerant. Refer to „Discharging, Adding Oil, Evacuating, and Charging Procedures for A/C System" in this section.
2. Remove the compressor. Refer to „Compressor" in this section.
3. Drain the oil from compressor into a suitable container. Measure and record the amount of oil drained from the compressor. Discard all used oil.
4. Remove the clutch plate and hub assembly. Refer to „Clutch Plate and Hub Assembly" in this section.
5. Remove the clutch rotor and bearing. Refer to „Clutch Rotor and Bearing „ in this section.
6. Remove the clutch coil. Refer to „Clutch Coil" in this section.
7. Remove and discard the shaft seal parts. Refer to „Shaft Seal Replacement" in this section.
8. Remove the compressor through bolts. Remove and discard the gaskets.
9. Using a wooden block and a plastic headed hammer, tap the compressor housing at the mounting locations to disengage the housing from the compressor cylinder.

Important: Note the assembly sequence of the thrust washer and the bearing for ease of assembly.

10. Remove the thrust washer and the bearing.
11. Remove and discard the compressor housing to cylinder O-ring.

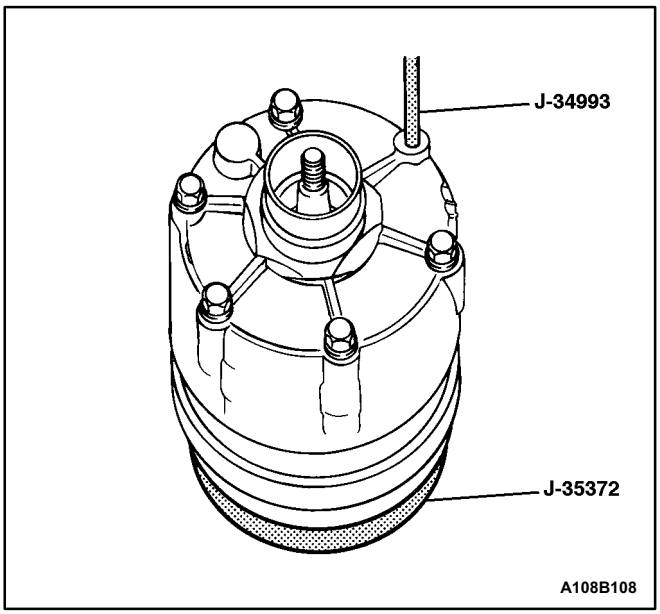

Installation Procedure

1. Rest the rear head on the support block J-35372. Locate the control valve at the 6 o'clock position.
2. Install cylinder alignment rod J-34993 through the 11 o'clock and the 5 o'clock bolt holes.
3. Lubricate the new cylinder to compressor housing O-ring with clean polyalkaline glycol (PAG) oil.
4. Install the new O-ring in the cylinder O-ring groove.
5. Install the thrust washer and bearing in the same order as they were removed.
6. Align the guide pin recess in the compressor housing with the guide pin. Press down on the compressor housing with both hands to force it over the O-ring on the cylinder assembly.
7. Add a new through bolt gasket to the through bolts and install it into the compressor assembly. Four through bolts must thread into the rear head before removing the guide pins.

Tighten

Alternately tighten the through bolts in progressive torque sequence to 10 N•m (89 lb•in).

8. Install a new shaft seal. Refer to „Shaft Seal Replacement” in this section.
9. Add new PAG oil equal to the amount drained in Step 3.
10. Install the clutch coil. Refer to „Clutch Coil” in this section.
11. Install the clutch rotor and bearing. Refer to „Clutch Rotor and Bearing” in this section.
12. Install the clutch plate and hub assembly. Refer to „Clutch Plate and Hub Assembly” in this section.
13. Perform a leak test on the compressor. Refer to „Leak Testing (External)” in this section.
14. Install the compressor. Refer to „Compressor” in this section.
15. Evacuate and recharge the A/C system. Refer to „Discharging, Adding Oil, Evacuating, and Charging Procedures for A/C System” in this section.

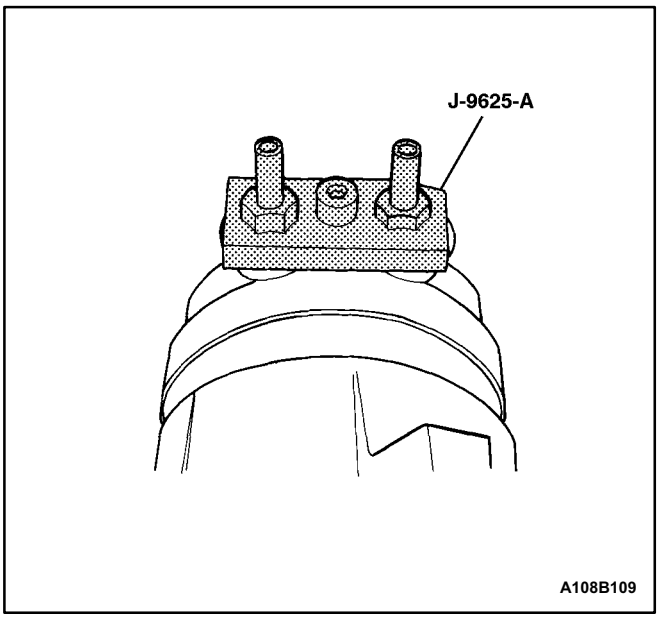

LEAK TESTING (EXTERNAL)

Tools Required

J-9625-A Pressure Testing Connector

1. Install the pressure testing connector J-9625-A to the suction/discharge ports on the compressor.
2. Attach the center hose of the manifold gauge set on the charging station to a refrigerant drum standing in an upright position. Open the valve on the drum.
3. Connect the charging station high and low-pressure lines to the corresponding fittings on the pressure testing connector J-9625-A (or hoses equipped with valve depressors). The suction port (low-side) of the compressor has a large internal opening. The discharge port (high-side) has a smaller internal opening into the compressor.
4. Open the low-pressure control, the high-pressure control, and the refrigerant control on the charging station to allow the refrigerant vapor to flow into the compressor.
5. Using a leak detector, check for leaks at the high-pressure relief valve seal, the housing seal, the rear head seal, the center cylinder seal, the through bolt gaskets, and the compressor shaft seal. After checking for leaks, shut off the low-pressure control, the highpressure control, and the refrigerant control lines on the charging station.
6. If an external leak is present, perform the necessary corrective measures and recheck for leaks to verify that the leak has been corrected.
7. Loosen the manifold gauge hose connections to the gauge adapters connected to the low and high sides. Allow the vapor pressure to release from the compressor. If valve depressor type hoses are used, loosen the hose connections at the gauge manifold to release vapor pressure from the compressor.
8. Disconnect both gauge hoses. Remove the pressure testing connector J-9625-A.

GENERAL DESCRIPTION AND SYSTEM OPERATION

GENERAL INFORMATION

THE V5 A/C SYSTEM

The V5 variable displacement compressor along with the thermal expansion valve on the evaporator, constitutes a largely self-regulating system. There is no pressure cycling switch, no high-pressure cut-off switch and no low-pressure cut-off switch. The compressor clutch is controlled by the electronic control module (ECM), which receives data from various engine systems and from a pressure transducer located in the high-pressure refrigerant pipe. In normal operation, the clutch is engaged continuously. Should one of the monitored conditions become abnormal, the ECM will disengage the compressor clutch until normal operation is restored. These conditions include the following:

- Wide-open throttle.
- High engine coolant temperature.
- High engine RPM.
- Refrigerant low pressure.
- Refrigerant high pressure.

SYSTEM COMPONENTS - FUNCTIONAL

Compressor

All compressors are belt-driven from the engine crankshaft through the compressor clutch pulley. The compressor pulley rotates without driving the compressor shaft until an electromagnetic clutch coil is energized. When voltage is applied to energize the clutch coil, the clutch plate and hub assembly is drawn rearward toward the pulley. The magnetic force locks the clutch plate and pulley together as one unit to drive the compressor shaft.

As the compressor shaft is driven, it compresses the low-pressure refrigerant vapor from the evaporator into a high-pressure, high-temperature vapor. The refrigerant oil which is used to lubricate the compressor is carried with the refrigerant. Refer to „V5 Air Conditioning Compressor Overhaul" in this section.

Pressure Relief Valve

The compressor is equipped with a pressure relief valve which is placed in the system as a safety factor. Under certain conditions, the refrigerant on the discharge side may exceed the designed operating pressure. In order to prevent system damage, the valve is designed to open automatically at approximately 3-171 to 4-137 kPa (460 to 600 psi) in an R-134a system. Conditions that might cause this valve to open, such as a defective pressure transducer, an inoperative cooling fan, etc., should be corrected. The refrigerant oil and the refrigerant should be replaced as necessary.

Condenser Core

The condenser assembly in front of the radiator consists of coils which carry the refrigerant, and cooling fins that provide the rapid transfer of heat. The air passing through the condenser cools the high-pressure refrigerant vapor and causes it to condense into a liquid.

Expansion Valve

The expansion valve is located with the evaporator core, inside the heater/air distributor case under the instrument panel.

The expansion valve can fail in three different positions: open, closed, or restricted.

An expansion valve that fails in the open position will result in a noisy A/C compressor or no cooling. The cause can be a broken spring, a broken ball, or excessive moisture in the A/C system. If the spring or the ball are found to be defective, replace the expansion valve. If excessive moisture is found in the A/C system, recycle the refrigerant.

An expansion valve that fails in the closed position will result in low suction pressure and no cooling. This may be caused by a failed power dome or excessive moisture in the A/C system. If the power dome on the expansion valve is found to be defective, replace the expansion valve. If excessive moisture is found in the A/C system, recycle the refrigerant.

A restricted expansion valve will result in low suction pressure and no cooling. This may be caused by debris in the refrigerant system. If debris is believed to be the cause, recycle the refrigerant, replace the expansion valve, and replace the receiver-dryer.

Evaporator Core

The evaporator is a device which cools and dehumidifies the air before it enters the vehicle. High-pressure liquid refrigerant flows through the expansion tube orifice and becomes a low-pressure gas in the evaporator. The heat in the air passing through the evaporator core is transferred to the cooler surface of the core, which cools the air. As the process of heat transfer from the air to the evaporator core surface is taking place, any moisture or humidity in the air condenses on the outside surface of the evaporator core and is drained off as water.

Receiver-Dryer

The sealed receiver-dryer assembly is connected to the condenser outlet pipe. It acts as a refrigerant storing container, receiving liquid, vapor, and refrigerant oil from the evaporator.

At the bottom of the receiver-dryer is the desiccant, which acts as a drying agent for the moisture that may have entered the system. An oil bleed hole is located near the bottom of the receiver-dryer outlet pipe to provide an oil return path to the compressor. The receiver-dryer is serviceable only as an assembly.

Heater Core

The heater core heats the air before it enters the vehicle. Engine coolant is circulated through the core to heat the

outside air passing over the fins of the core. The core is functional at all times and may be used to temper conditioned air in the A/C mode as well as in the heat or the vent modes.

SYSTEM COMPONENTS - CONTROL

Controller

The operation of the A/C system is controlled by the switches on the control head. This console mounted heating and ventilation panel contains the following:

Three rotary control knobs

1. The rotary temperature control knob
   - Actuates by cable.
   - Varies the mix of the fresh air from outside the vehicle with the heated air from inside the vehicle to suit individual preference.
   - Raises the temperature of the air entering the vehicle by rotation toward the right, or the red portion of the knob.
2. The rotary mode control knob
   - Actuates by vacuum.
   - Regulates the air distribution between the windshield, the instrument panel, and the floor vents.
3. The rotary blower control knob
   - Turns on to operate the blower motor at four speeds.
   - Turns OFF to stop the blower.
   - Operates completely independently from both the mode control knob, that regulates the defroster door, and the temperature control knob.
   - Changes the fan speed in any mode and at any temperature setting. However, if the rotary blower control knob is OFF, the A/C system is OFF, regardless of the position of the A/C push knob.

Three push knobs

1. The A/C push knob
   - Controls the A/C.
   - Turns the A/C on when the push knob is pressed and the indicator lamp is illuminated. (The rotary blower control knob must be in one of its four positions for the A/C to function.)
2. The rear window defogger push knob
   - Controls the rear window defogger.
   - Turns on the rear window defogger when the push knob is pressed and the indicator lamp is illuminated.
3. The fresh air control push knob
   - Switches between recirculating passenger compartment air or bringing outside air into the passenger compartment.
   - Defaults to fresh air mode. The indicator lamp is illuminated when recirculation is selected.
   - Operates the inlet air door by vacuum.

The electric engine cooling fans are operational any time the A/C control is on. This added feature is part of the A/C controller function and is aimed at preventing excessive compressor head temperatures. It also allows the A/C system to function more efficiently. The operation of the cooling fans is controlled by the electronic control module (ECM) through the cooling fan relays.

Vacuum Lines

Vacuum lines are molded to a connector, which is attached to a vacuum control switch on the control head assembly.

In case of leakage or hose collapse, it will not be necessary to replace the entire harness assembly. Replacement can be made by cutting the hose and inserting a plastic connector. If an entire hose must be replaced, cut all the hoses off at the connector and attach hoses directly to the control head vacuum switch.

Vacuum Tank

During heavy acceleration, the vacuum supply from the manifold drops. A check valve in the vacuum tank maintains vacuum so that under load conditions vacuum will be available for continuous use.

Pressure Transducer

Pressure transducer switching incorporates the functions of the high-pressure and the low-pressure cutout switches along with the fan cycling switch. The pressure transducer is located in the high-side liquid refrigerant line behind the right headlamp, between the right front inner fender and the air filter assembly. The output from this pressure transducer goes to the ECM which controls the compressor function based on the pressure signal.

Wide-Open Throttle (WOT) Compressor Cutoff

During full throttle acceleration, the throttle position sensor (TPS) sends a signal to the ECM, which then controls the compressor clutch.

V5 COMPRESSOR - GENERAL DESCRIPTION

Vehicles using the V5 compressor may have differences between installations in the mounting brackets, the drive systems, the pulleys, the connections, and the system capacities. Basic overhaul procedures are similar between the compressors used on different vehicles.

When servicing the compressor, keep dirt and foreign material from getting on or into the compressor parts and the system. Clean tools and a clean work area are important for proper service. The compressor connections and the outside of the compressor should be cleaned before undertaking any on-vehicle repairs and before the removal of the compressor. The parts must be kept clean at all times. Any parts that are to be reassembled should be cleaned with trichloroethane, naphtha, stoddard solvent, kerosene, or equivalent

solvents and dried with dry air. Use only lintfree cloths to wipe the parts.

The operations described are based on bench overhaul with the compressor removed from the vehicle, except as noted. They have been prepared in the order of accessibility of the components. When a compressor is removed from the vehicle for servicing, the amount of oil remaining in the compressor should be drained, measured, and recorded. This oil should then be discarded and new polyalkaline glycol (PAG) refrigerant oil added to the compressor.

Important: The oil drain plug must be removed and the oil drained through the plug opening to insure complete draining of the oil from the compressor.

V5 COMPRESSOR - DESCRIPTION OF OPERATION

The V5 is a variable displacement compressor that can match the automotive A/C demand under all conditions without cycling. The basic compressor mechanism is a variable angle wobble-plate with five axially oriented cylinders. The center of control of the compressor displacement is a billows-actuated control valve located in the rear head of the compressor that senses compressor suction pressure.

The wobbleplate angle and the compressor displacement are controlled by the crankcase suction pressure differential. When the A/C capacity demand is high, the suction pressure will be above the control point. The valve will maintain a bleed from crankcase to suction. With no crankcase-suction pressure differential, the compressor will have maximum displacement.

When the A/C capacity demand is lower and the suction pressure reaches the control point, the valve will bleed discharge gas into the crankcase and close off a passage from the crankcase to the suction plenum. The angle of the wobble-plate is controlled by a force balance on the five pistons. A slight elevation of the crankcase suction pressure differential creates total force on the pistons resulting in a movement about the wobble-plate pivot pin that reduces the plate angle.

The compressor has a unique lubrication system. The crankcase suction bleed is routed through the rotating wobble-plate for lubrication of the wobble-plate bearing. The rotation acts as an oil separator which removes some of the oil from the crankcase suction bleed, re-routing it to the crankcase where it can lubricate the compressor mechanism.

SECTION 7D

AUTOMATIC TEMPERATURE CONTROL HEATING, VENTILATION, AND AIR CONDITIONING SYSTEM

CAUTION: Disconnect the negative battery cable before removing or installing any electrical unit or when a tool or equipment could easily come in contact with exposed electrical terminals. Disconnecting this cable will help prevent personal injury and damage to the vehicle. The ignition must also be in LOCK unless otherwise noted.

TABLE OF CONTENTS

Specifications 7D-2
Fastener Tightening Specifications 7D-2
Schematic and Routing Diagrams 7D-3
A/C Sensors and Defoggers Diagram 7D-3
A/C Blower and Motor Controls Diagram 7D-4
A/C Compressor Controls Diagram (SOHC) . . . 7D-5
A/C Compressor Controls Diagram (DOHC) . . . 7D-6
Diagnosis 7D-7
General A/C Diagnostics 7D-7
V5 System Air Conditioning and Automatic Temperature Control (ATC) 7D-7
Self-Diagnostic Circuit Check 7D-7
Automatic Temperature Controller (ATC) Does Not Operate When Ignition Is On 7D-8
Controller Does Not Illuminate When Light Switch Is On 7D-9
No Hot Air From Blower 7D-10
No Cool Air From Blower 7D-12
Blower Motor Does Not Run At All 7D-14
Mode Controls Do Not Work 7D-17
Air Source Selection Not Controlled 7D-18
Compressor Magnetic Clutch Does Not Engage 7D-19
Diagnostic Trouble Codes 7D-20
Code 1 InCar Sensor Error 7D-20
Code 2 Ambient Air Temperature Sensor Error 7D-22
Code 3 Coolant Temperature Sensor Error . . . 7D-24
Code 4 Air Mix Door Error 7D-26
Code 5 Sun Sensor Error 7D-30
Code 6 Power Transistor Error 7D-32
Code 7 MaxHi Relay Error 7D-34
Maintenance and Repair 7D-35
On-Vehicle Service 7D-35
General A/C System Service Procedures 7D-35
General Service Procedures 7D-35
Serviceable Components 7D-35
Common HVAC Components 7D-35
Automatic Temperature Control Assembly 7D-36
Air Mix Door Motor 7D-36
Heater/Defroster Door Motor 7D-38
Mode Door Motor 7D-39
Inlet Air Door Motor 7D-40
Coolant Temperature Sensor 7D-42
Ambient Air Temperature Sensor 7D-43
In-Car Temperature Sensor 7D-44
Sun Sensor 7D-45
Heater/Air Distributor Case Assembly 7D-46
Relay 7D-49
Transistor 7D-50
Filter 7D-50
/C Expansion Valve 7D-51
Core 7D-53
Core 7D-55
Unit Repair 7D-57
V5 Air Conditioning Compressor Overhaul 7D-57
Compressor Overhaul 7D-57
General Description and System Operation 7D-58
General Information 7D-58
V5 A/C System 7D-58
System Components - Control 7D-58

SPECIFICATIONS

FASTENER TIGHTENING SPECIFICATIONS

Application	N•m	Lb•	Lb•
Air Filter Cover Nut	4	-	35
Ambient Air Temperature Retaining Bracket Nut	6	-	53
Blower Motor Resistor Screws	6	-	53
Control Assembly Retaining Screws	4	-	35
Expansion Valve Bolts	10	-	89
Heater/Air Distributor Assembly Case Screws	8	-	71
Liquid Evaporator Pipe Retaining Nuts	10	-	89
Suction Hose Retaining Nuts	10	-	89

SCHEMATIC AND ROUTING DIAGRAMS

A/C SENSORS AND DEFOGGERS DIAGRAM

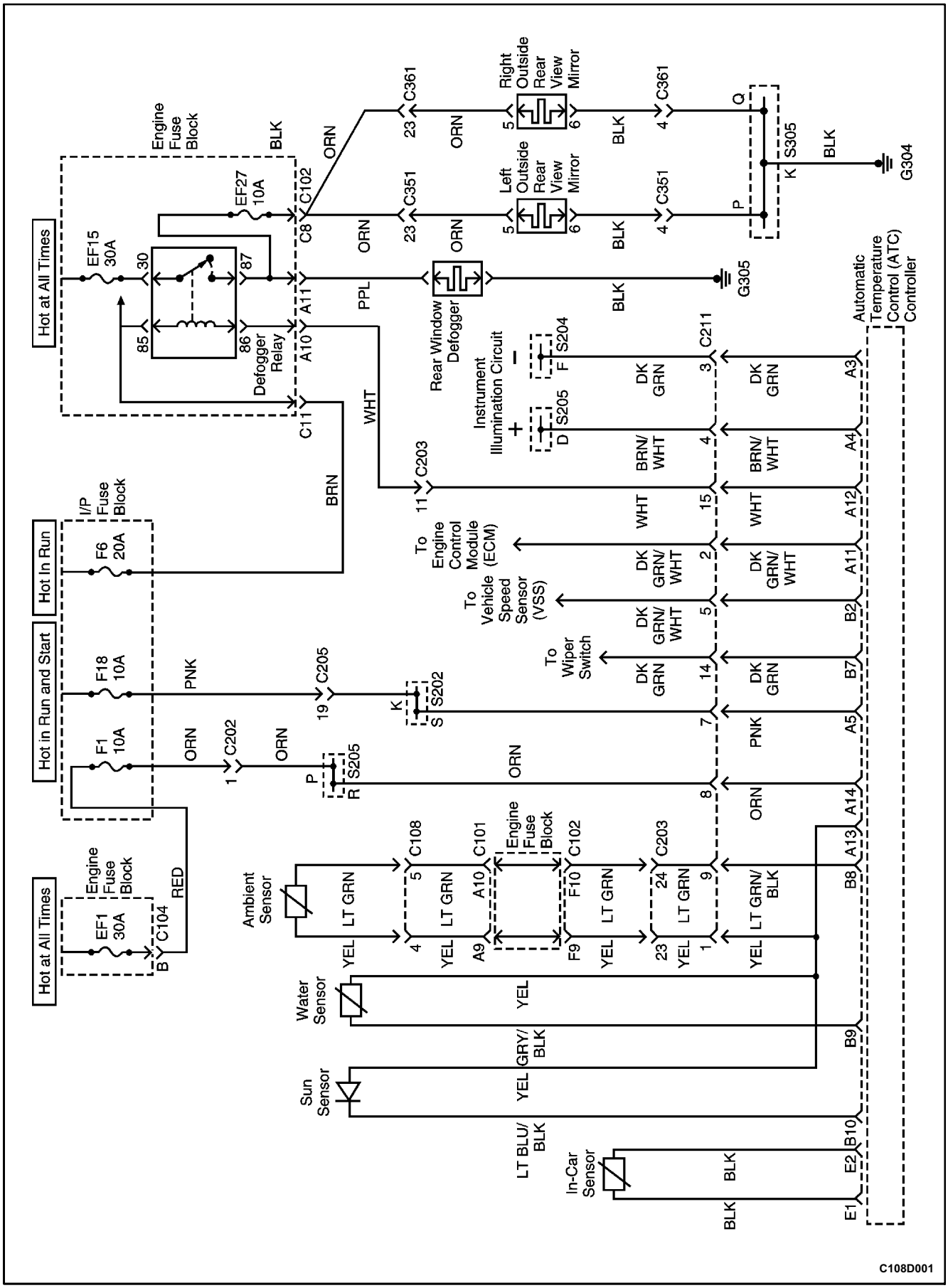

A/C BLOWER AND MOTOR CONTROLS DIAGRAM

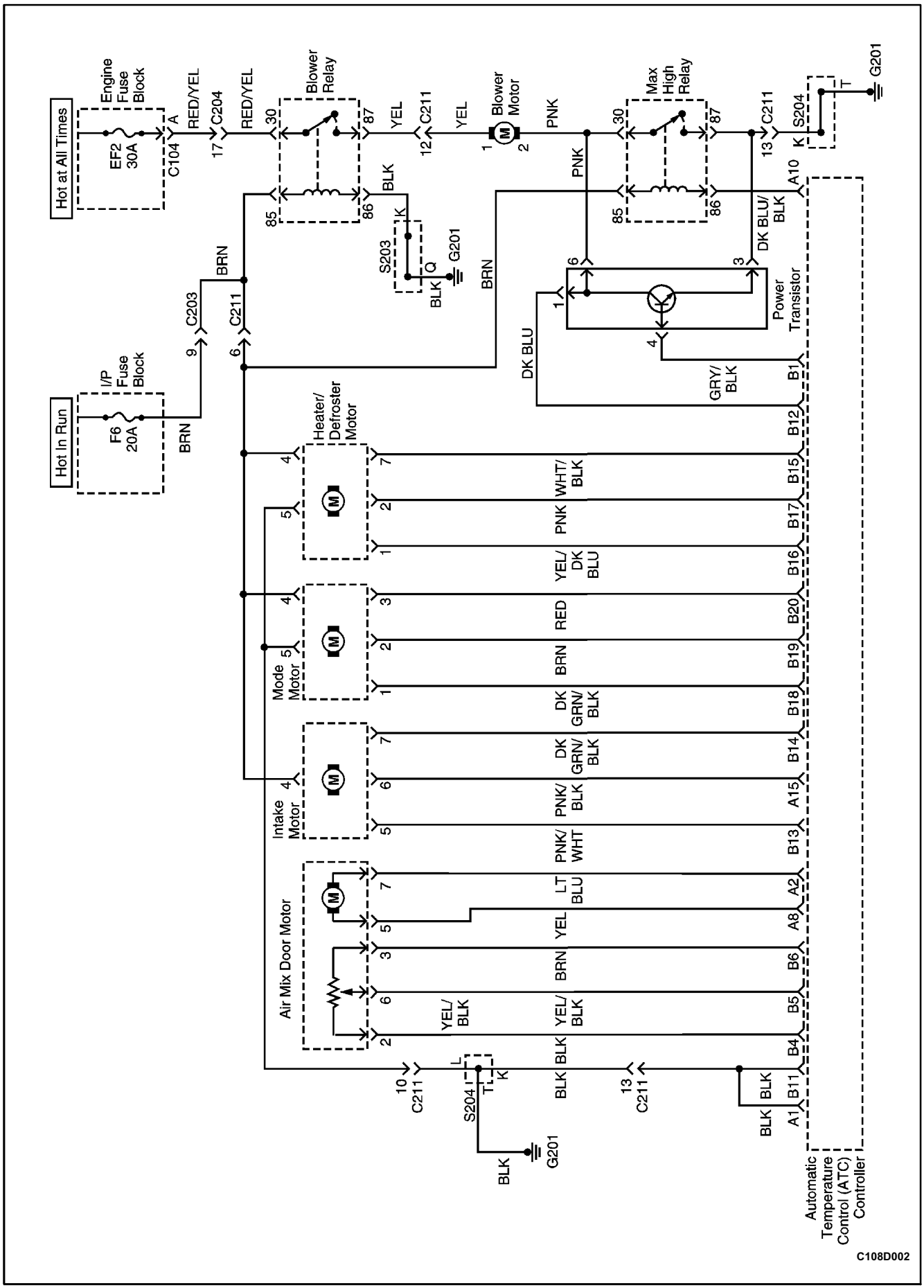

A/C COMPRESSOR CONTROLS DIAGRAM (SOHC)

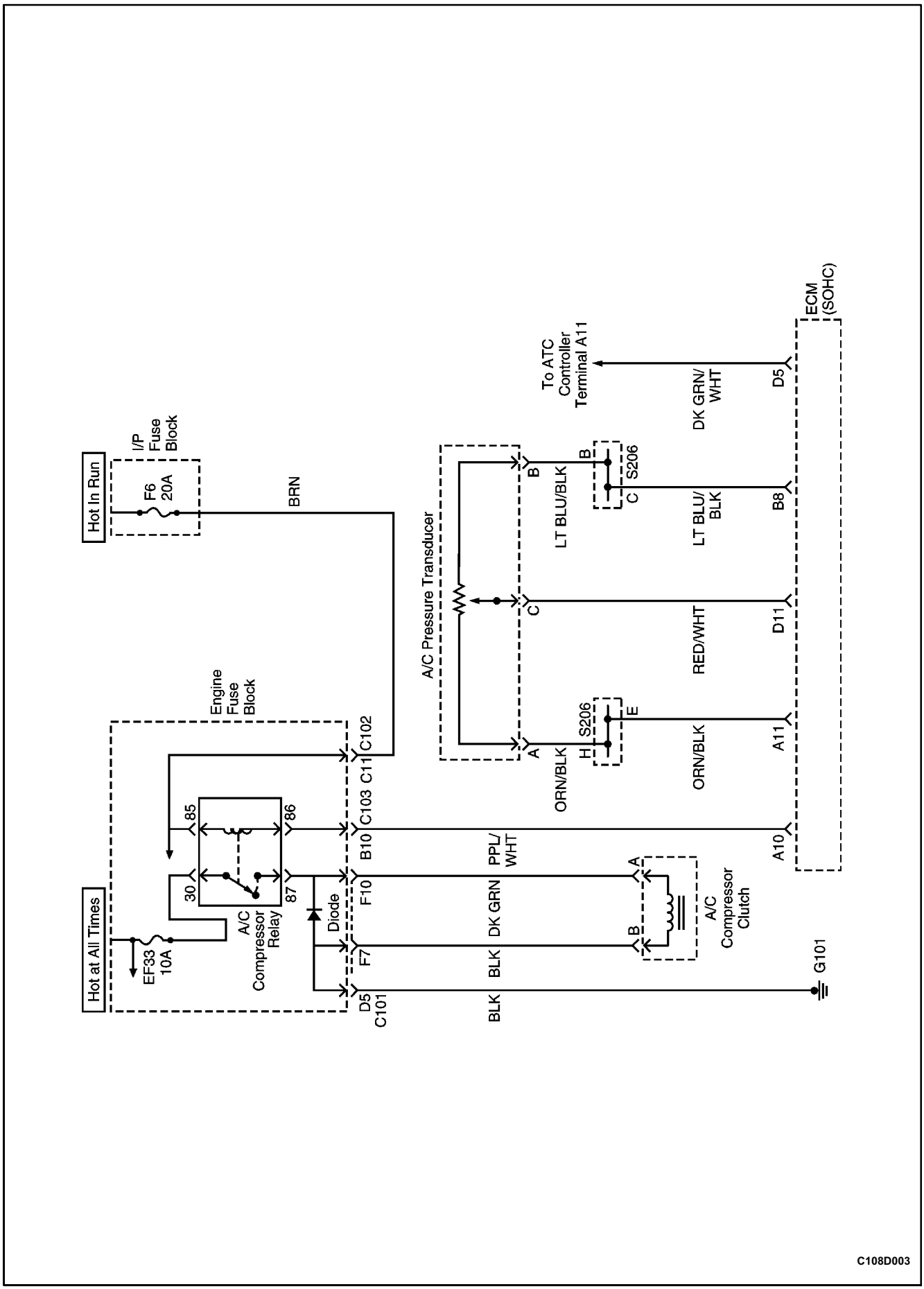

A/C COMPRESSOR CONTROLS DIAGRAM (DOHC)

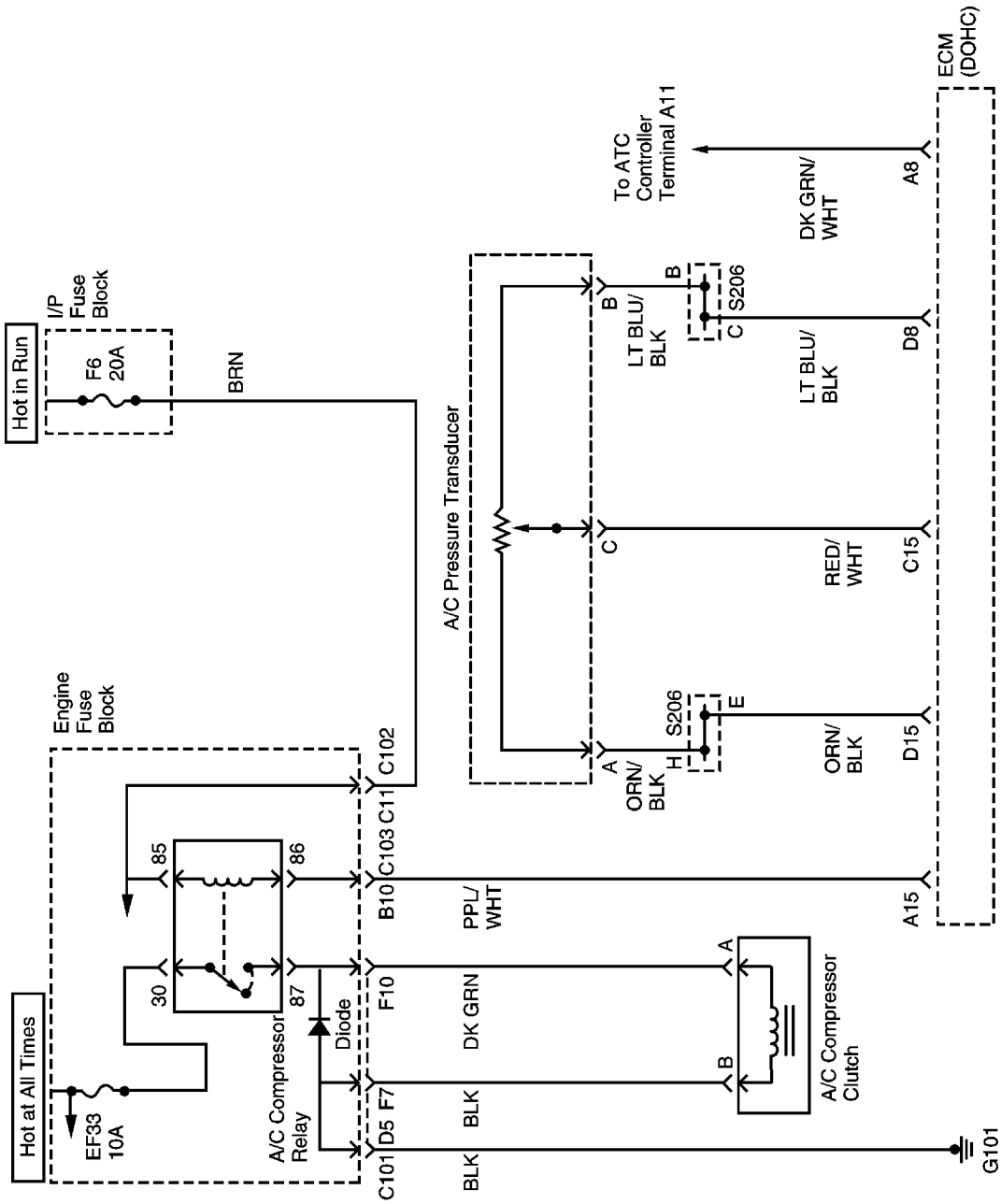

C108D004

DIAGNOSIS

GENERAL A/C DIAGNOSTICS

Refer to *Section 8B, Manual Control Heating, Ventilation, and Air Conditioning System* for details of the following procedures:

- A/C Performance Test.
- Insufficient Cooling „Quick Check" Procedure.
- Insufficient Cooling Diagnosis.
- Leak Testing the Refrigerant System.
- Low- and High-Side Pressure Relationship Chart.
- Pressure Test Chart (R-134a System).
- Pressure-Temperature Relationship of R-134a.
- Testing the Refrigerant System.

V5 SYSTEM AIR CONDITIONING AND AUTOMATIC TEMPERATURE CONTROL (ATC)

SELF-DIAGNOSTIC CIRCUIT CHECK

The Daewoo fully automatic temperature controller (FATC) contains a self-diagnosis function to aid in finding any problem with the system. To enter the diagnostic mode, perform the following procedure:

1. Turn the ignition switch ON.
2. Set the temperature control to 26°C (79°F).
3. Within 3 seconds, push the AUTO and the OFF switches simultaneously, more than three times.
4. Count the number of times the temperature indicator screen blinks.
5. If there are no error codes set, the screen will not blink. When the controller indicates an error code, proceed to the table for that code.
6. Push the OFF switch to return the controller to its normal functions.

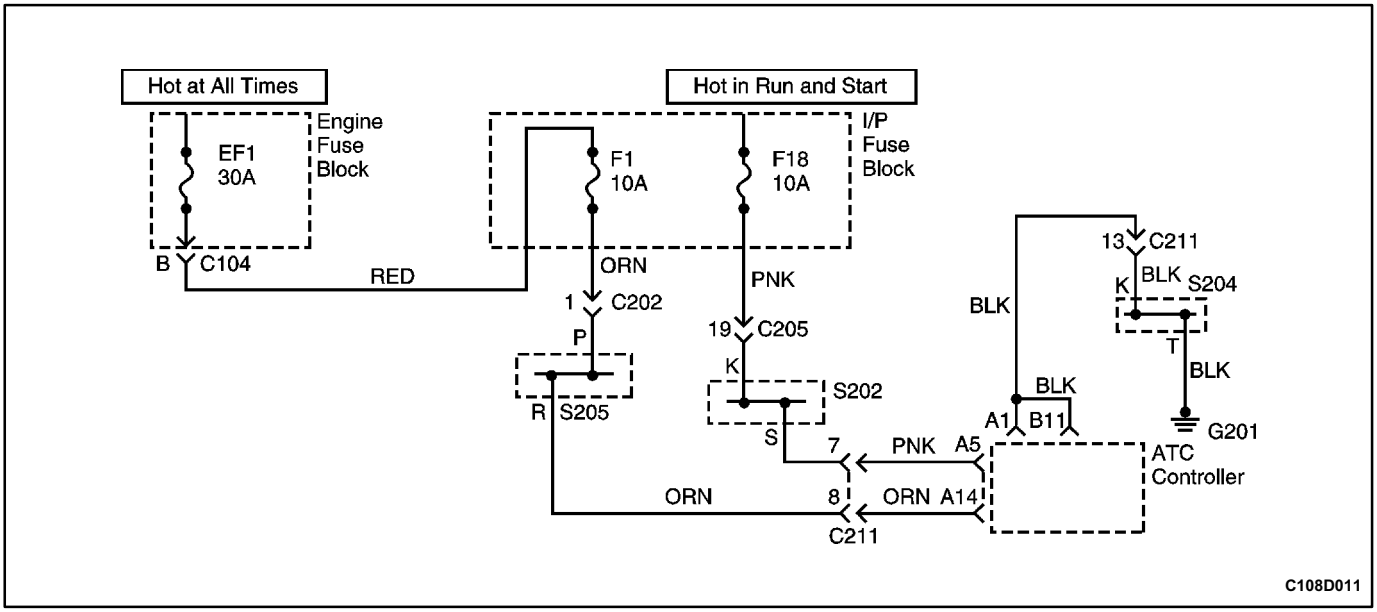

AUTOMATIC TEMPERATURE CONTROLLER (ATC) DOES NOT OPERATE WHEN IGNITION IS ON

Step	Action	Value(s)	Yes	No
1	Check the fuse F18. Is fuse F18 blown?	-	Go to *Step 2*	Go to *Step 3*
2	Replace fuse F18. Is the repair complete?	-	System OK	-
3	1. Remove the controller. 2. Measure the voltage between the connectors A5 and A1. Is the voltage as specified?	11-14 V	Go to *Step 4*	Go to *Step 5*
4	1. Check the controller for damage. 2. Replace the controller if it is damaged. Is the repair complete?	-	System OK	-
5	Check the voltage between terminal A1 and ground. Is this voltage as specified?	0 V	Go to *Step 6*	Go to *Step 7*
6	1. Check the wiring harness between fuse F18 and the terminal A5 for damage. 2. Replace the wiring harness if it is damaged. Is the repair complete?	-	System OK	-
7	1. Check the wiring harness between terminal A1 and ground G201 for damage. 2. Repair the wiring harness, splice S204, or ground connection as required. Is the repair complete?	-	System OK	-

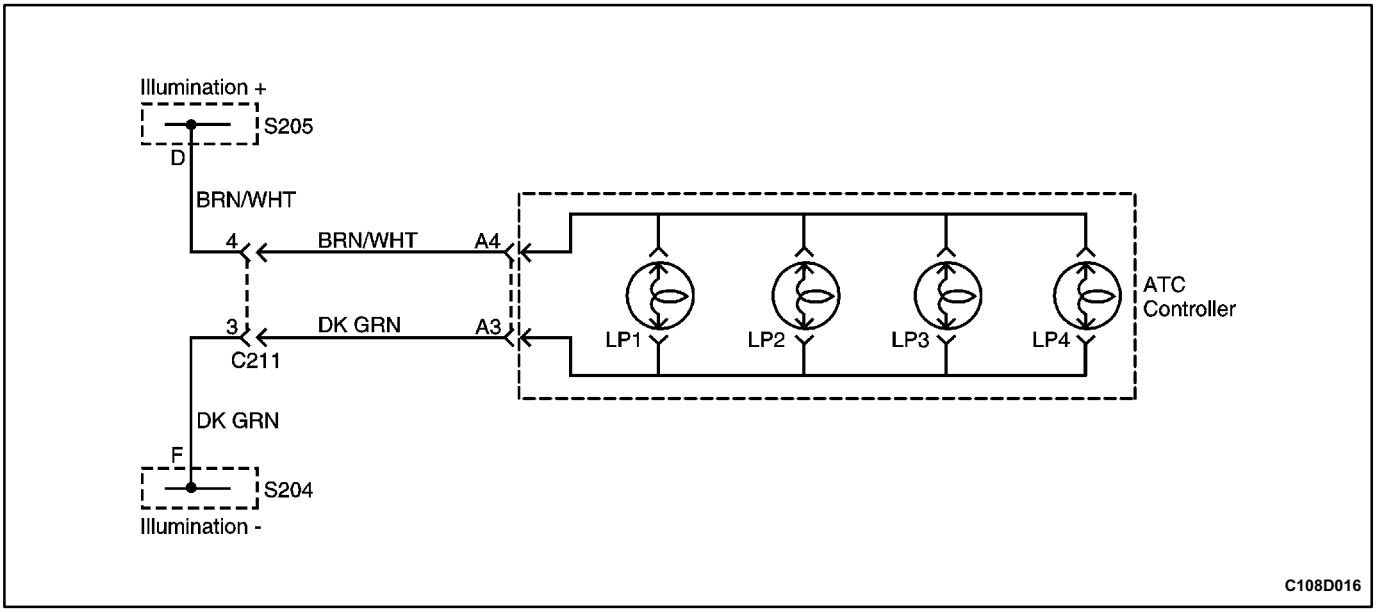

CONTROLLER DOES NOT ILLUMINATE WHEN LIGHT SWITCH IS ON

Step	Action	Value(s)	Yes	No
1	Check other instrumentation lights. Are those lights also off?	-	Go to *Section 9E, Instrumentation/ Driver Information*	Go to *Step 2*
2	1. Remove the controller. 2. Check the voltage between terminals A3 and A4 of the controller connector. Is the voltage within the specified value?	11-14 V	Go to *Step 4*	Go to *Step 3*
3	Repair the wiring harness between splice S205 and controller connector terminal A4 or between splice S204 and controller connector terminal A3. Is the repair complete?	-	System OK	-
4	Check the illumination lamps. Is one burned out?	-	Go to *Step 5*	Go to *Step 6*
5	Replace the burned out illumination lamp. Is the repair complete?	-	System OK	-

NO HOT AIR FROM BLOWER

Step	Action	Value(s)	Yes	No
1	Check the coolant level. Is the coolant level correct?	-	Go to *Step 3*	Go to *Step 2*
2	Add coolant as needed. Is the heater operating?	-	System OK	Go to *Step 3*
3	1. Turn the ignition to ON. 2. Observe the temperature indication screen of the controller. Does the digit flash on and off?	-	Go to *Step 4*	Go to *Step 5*
4	Run a selfdiagnosis circuit check. Does the display indicate a defect code?	-	Go to the table for the code that flashes	Go to *Step 7*
5	Observe the blower motor operation. Is the blower motor functioning at all?	-	Go to *Step 6*	Go to „Blower Motor Does Not Run at All”
6	Use the blower push switch to cycle the blower through its different speeds. Does the motor function at different speeds?	-	Go to *Step 7*	Go to „Code 6 - Power Transistor Error”
7	1. Run the blower and operate the MODE push switch manually. 2. Check for airflow out the various outlets. Does the air flow from the different outlets as it should?	-	Go to *Step 9*	Go to *Step 8*
8	1. Remove the heater outlet and check for obstructions. 2. Remove any obstructions found. Is the heater operating?	-	System OK	Go to *Step 9*
9	Observe the air mix door (AMD) motor while changing the temperature setting from 18 to 32°C (64 to 90°F) and then from 32 to 18°C (90 to 64°F). Is the AMD motor functioning properly?	-	Go to *Step 10*	Go to „Code 3 - Air Mix Door Error”
10	Check the coolant hoses for leaks or kinks. Are the coolant hoses in good condition?	-	Go to *Step 12*	Go to *Step 11*
11	Repair any problem with the coolant hoses. Is the heater operating?	-	System OK	Go to *Step 12*
12	Check the surge tank cap. Is the surge tank cap in good condition?	-	Go to *Step 14*	Go to *Step 13*
13	Repair or replace the surge tank cap as needed. Is the heater operating?	-	System OK	Go to *Step 14*
14	1. Set the A/C switch to OFF. 2. Set the temperature control to 32°C (90°F). 3. Set the blower motor speed to full high (all segments illuminated on the display). 4. Remove the surge tank cap. 5. Start the vehicle and run the engine at idle. 6. Watch for the flow of the coolant when the thermostat opens. Does the coolant flow?	-	Go to *Step 16*	Go to *Step 15*

No Hot Air From Blower (Cont'd)

Step	Action	Value(s)	Yes	No
15	1. Check for ● A faulty thermostat. ● A failed coolant pump impeller. ● A restriction in the cooling system. 2. Make repairs as needed. Is the repair complete?	-	System OK	-
16	Check the temperature of the heater inlet and outlet hoses by feel. Is the heater inlet hose hot and the outlet hose warm?	-	Go to *Step 18*	Go to *Step 17*
17	Back flush or replace the heater core. Is the repair complete?	-	System OK	-
18	Check the vehicle for cold air leaks at the ● Dash. ● Heater cases. ● Vents. Are any leaks found?	-	Go to *Step 20*	Go to *Step 19*
19	Repair any cold air leaks. Is the repair complete?	-	System OK	-
20	Check the coolant temperature sensor using the tests in „Code 3 - Coolant Temperature Sensor Error.” Is there a problem indicated in the sensor, the sensor wiring, or the controller?	-	Go to *Step 21*	Go to *Step 22*
21	Repair or replace the sensor, the wiring, or the controller as required. Is the repair complete?	-	System OK	-
22	Check the in-car sensor using the tests in „Code 1 - In-Car Sensor Error.” Is there a problem indicated in the sensor, the sensor wiring, or the controller?	-	Go to *Step 23*	Go to *Step 24*
23	Repair or replace the sensor, the wiring, or the controller as required. Is the repair complete?	-	System OK	-
24	Check the ambient air temperature sensor using the tests in „Code 2 - Ambient Air Temperature Sensor Error.” Is there a problem indicated in the sensor, the sensor wiring, or the controller?	-	Go to *Step 25*	Go to *Step 26*
25	Repair or replace the sensor, the wiring, or the controller as required. Is the repair complete?	-	System OK	-
26	Check the sun sensor using the tests in „Code 5 - Sun Sensor Error.” Is there a problem indicated in the sensor, the sensor wiring, or the controller?	-	Go to *Step 27*	Go to *Step 28*
27	Repair or replace the sensor, the wiring, or the controller as required. Is the repair complete?	-	System OK	-
28	Replace the ATC controller. Is the repair complete?	-	System OK	-

NO COOL AIR FROM BLOWER

Step	Action	Value(s)	Yes	No
1	1. Turn the ignition to ON. 2. Observe the temperature indication screen of the controller. Does the digit flash on and off?	-	Go to *Step 2*	Go to *Step 3*
2	Run a self-diagnosis circuit check. Does the display indicate a defect code?	-	Go to the table for the code that flashes.	Go to *Step 7*
3	Observe the blower motor operation. Is the blower motor functioning at all?	-	Go to *Step 4*	Go to „Blower Motor Does Not Run at All”
4	Use the blower push switch to cycle the blower through its different speeds. Does the motor function at different speeds?	-	Go to *Step 5*	Go to „Code 6 Power - Transistor Error”
5	1. Run the blower and operate the MODE push switch manually. 2. Check for airflow out the various outlets. Does the air flow from the different outlets as it should?	-	Go to *Step 7*	Go to *Step 6*
6	1. Remove the heater outlet and check for obstructions. 2. Remove any obstructions found. Is the heater operating?	-	System OK	Go to *Step 9*
7	Observe the air mix door motor (AMD) while changing the temperature setting from 18 to 32°C (64 to 90°F) and then from 32 to 18°C (90 to 64°F). Is the AMD motor functioning properly?	-	Go to *Step 8*	Go to „Code 3 - Air Mix Door Error”
8	Perform the checks found in „Insufficient Cooling Diagnosis.” Is the system operating normally now?	-	System OK	Go to *Step 9*
9	Place the controller in the AUTO mode. Is smoke taken into the intake port of the incar sensor?	-	Go to *Step 12*	Go to *Step 10*
10	Check the intake hose for the incar sensor. Is the hose in good condition?	-	Go to *Step 12*	Go to *Step 11*
11	Repair or replace the intake hose. Is the repair complete?	-	System OK	-
12	Check the incar sensor using the tests in „Code 1 - InCar Sensor Error.” Is there a problem indicated in the sensor, the sensor wiring, or the controller?	-	Go to *Step 13*	Go to *Step 14*
13	Repair or replace the sensor, the wiring, or the controller as required. Is the repair complete?	-	System OK	-
14	Check the ambient air temperature sensor using the tests in „Code 2 - Ambient Air Temperature Sensor Error.” Is there a problem indicated in the sensor, the sensor wiring, or the controller?	-	Go to *Step 15*	Go to *Step 16*

No Cool Air From Blower (Cont'd)

Step	Action	Value(s)	Yes	No
15	Repair or replace the sensor, the wiring, or the controller as required. Is the repair complete?	-	System OK	-
16	Check the sun sensor using the tests in „Code 5 - Sun Sensor Error.” Is there a problem indicated in the sensor, the sensor wiring, or the controller?	-	Go to *Step 17*	Go to *Step 18*
17	Repair or replace the sensor, the wiring, or the controller as required. Is the repair complete?	-	System OK	-
18	Perform the coolant temperature sensor test. Is the coolant temperature sensor malfunctioning?	-	Go to *Step 19*	Go to *Step 20*
19	Replace the coolant temperature sensor. Is the repair complete?	-	System OK	-
20	Replace the ATC controller. Is the repair complete?	-	System OK	-

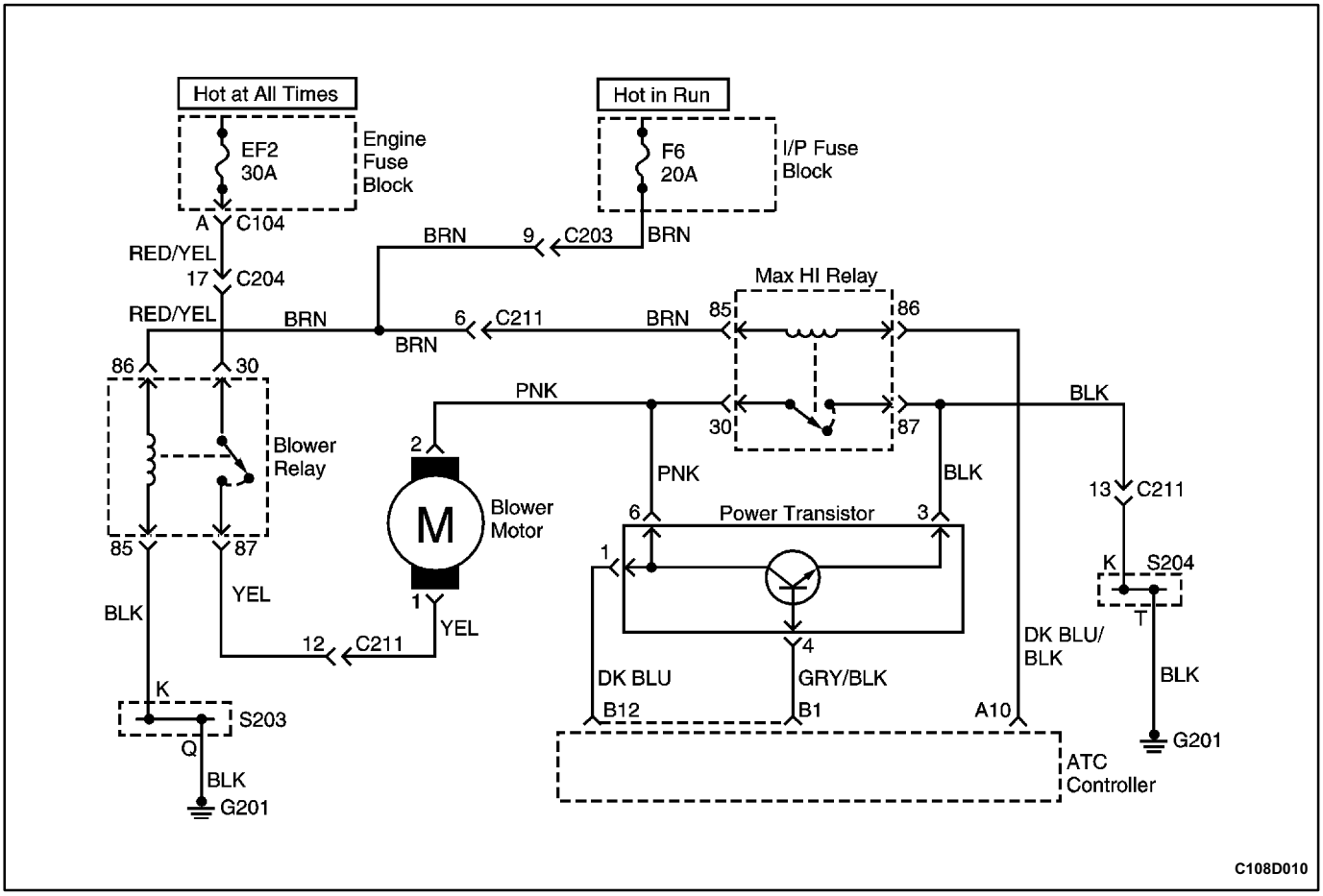

BLOWER MOTOR DOES NOT RUN AT ALL

Step	Action	Value(s)	Yes	No
1	1. Turn the ignition to ON. 2. Observe the temperature indication screen of the controller. Does the digit go on and off?	-	Go to *Step 2*	Go to *Step 3*
2	Run a self-diagnosis circuit check. Does the display indicate a defect code?	-	Go to the table for the code that flashes.	-
3	Check fuse F6 in the I/P fuse block. Is this fuse in good condition?	-	Go to *Step 5*	Go to *Step 4*
4	Replace fuse F6. Is the repair complete?	-	System OK	-
5	Check fuse EF2 in the engine fuse block. Is the fuse in good condition?	-	Go to *Step 7*	Go to *Step 6*
6	Replace fuse EF2. Is the repair complete?	-	System OK	-
7	1. Turn the ignition switch to ON. 2. Measure the voltage between ground and terminal 87 (YEL) of the blower relay. Is the voltage within the specified value?	11-14 V	Go to *Step 15*	Go to *Step 8*

Blower Motor Does Not Run At All (Cont'd)

Step	Action	Value(s)	Yes	No
8	Measure the voltage between ground and terminal 86 (BRN) at the blower relay. Is the voltage within the specified value?	11-14 V	Go to *Step 10*	Go to *Step 9*
9	1. Turn the ignition switch to OFF. 2. Check circuit BRN between terminal 86 of the blower relay to F6 in the I/P fuse block. 3. Repair any problem found in the wiring or terminals at the relay socket or connector C203. Is the repair complete?	-	System OK	-
10	Measure the voltage between ground and terminal 30 (RED/YEL) at the blower relay. Is the voltage within the specified value?	11-14 V	Go to *Step 12*	Go to *Step 11*
11	1. Turn the ignition switch to OFF. 2. Check circuit RED/YEL between terminal 30 of the blower relay to EF2 in the engine fuse block. 3. Repair any problem found in the wiring or terminals at the fuse block connector C104, connector C204, or at the relay socket. Is the repair complete?	-	System OK	-
12	1. Turn the ignition switch to OFF. 2. Check the continuity in the wiring harness between the blower relay terminal 85 (BLK) and ground. Does the ohmmeter show the specified value?	≈ 0 Ω	Go to *Step 14*	Go to *Step 13*
13	Repair any problem found in terminal 85 at the relay connector, circuit BLK, splice S203, or ground G201. Is the repair complete?	-	System OK	-
14	Replace the blower relay. Is the repair complete?	-	System OK	-
15	1. Turn the ignition switch to OFF. 2. Disconnect the wiring harness at the blower motor. 3. Turn the ignition switch to ON. 4. Measure voltage between ground and blower connector 1 (YEL). Is the voltage within the specified value?	11-14 V	Go to *Step 17*	Go to *Step 16*
16	1. Turn the ignition switch to OFF. 2. Check circuit YEL between blower connector terminal 1 and blower relay terminal 87. 3. Repair any problem found in the wiring or a connector terminal at the blower connector, connector C211, or the blower relay socket. Is the repair complete?	-	System OK	-
17	Measure the resistance between the connector terminals on the blower motor. Does the resistance match the specified value?	≈ 0.5 Ω	Go to *Step 19*	Go to *Step 18*

Blower Motor Does Not Run At All (Cont'd)

Step	Action	Value(s)	Yes	No
18	Replace the blower motor. Is the repair complete?	-	System OK	-
19	Measure the resistance of circuit PNK between terminal 2 of the blower connector and terminal 30 of the Max HI relay and terminal 6 of the power transistor. Does the resistance match the specified value?	≈ 0 Ω	Go to *Step 21*	Go to *Step 20*
20	Repair the problem in circuit PNK. Is the repair complete?	-	System OK	-
21	Measure the resistance of circuit BLK from terminal 3 of the power transistor connector to ground. Does the resistance match the specified value?	≈ 0 Ω	Go to *Step 23*	Go to *Step 22*
22	1. Trace circuit BLK from terminal 3 of the power transistor connector and terminal 87 of the Max HI relay to ground G201. 2. Repair any problem found in the wiring, connector C211, splice S204, or ground G201. Is the repair complete?	-	System OK	-
23	Replace the ATC controller. Is the repair complete?	-	System OK	-

MODE CONTROLS DO NOT WORK

Refer to „A/C Blower and Motor Controls" for the electrical schematic diagram of the circuits described in this procedure.

Mode Controls Do Not Work

Step	Action	Value(s)	Yes	No
1	Measure the voltage between terminal 4 and ground of the mode motor and the HTR/DEF motor. Is the voltage within the specified value for both motors?	11-14 V	Go to *Step 3*	Go to *Step 2*
2	1. Check the connector and circuit BRN for any wiring or terminal problems. 2. Repair any problems found. Is the repair complete?	-	System OK	-
3	1. Using the Motor Control Table, measure the voltages at the specified terminals of the specified motor connectors. 2. Change the mode settings and observe the voltage changes. Are the voltages as specified?	See the „Motor Control Table"	Go to *Step 4*	Go to *Step 5*
4	Replace the motor that does not operate properly. Is the repair complete?	-	System OK	-
5	1. Using the Motor Control Table, measure the voltages at the specified terminals of the specified controller connectors. 2. Change the mode settings and observe the voltage changes. Are the voltages as specified?	See the „Motor Control Table"	Go to *Step 6*	Go to *Step 7*
6	1. Check the wiring harness and connectors between the controller and the motor that is not performing properly. 2. Repair or replace the wiring harness or the defective terminal. Is the repair complete?	-	System OK	-
7	Check the connector at the controller. Is there a defective terminal?	-	Go to *Step 8*	Go to *Step 9*
8	Repair or replace the terminal. Is the repair complete?	-	System OK	-
9	Replace the controller. Is the repair complete?	-	System OK	-

Motor Control Table

Mode Setting	Mode Motor			HTR/DEF Motor		
	Connector Terminal					
	Controller/ Motor	Controller/ Motor	Controller/ Motor	Controller/ Motor	Controller/ Motor	Controller/ Motor
	B20/3	B19/2	B18/1	B17/2	B16/1	B15/7
Vent	11-14 V	11-14 V	0 V	0 V	11-14 V	11-14 V
BiLevel	11-14 V	0 V	11-14 V	11-14 V	11-14 V	0 V
Foot	0 V	11-14 V	11-14 V	11-14 V	11-14 V	0 V
Foot/Defrost	0 V	11-14 V	11-14 V	11-14 V	0 V	11-14 V
Defrost	0 V	11-14 V	11-14 V	0 V	11-14 V	11-14 V

AIR SOURCE SELECTION NOT CONTROLLED

Refer to „A/C Blower and Motor Controls” for the electrical schematic diagram of the circuits described in this procedure.

Air Source Selection Not Controlled

Step	Action	Value(s)	Yes	No
1	Measure the voltage at terminal 4 of the intake motor. Is the voltage within the value specified?	11-14 V	Go to *Step 3*	Go to *Step 2*
2	1. Check the connector and circuit BRN for any wiring or terminal problems. 2. Repair any problems found. Is the repair complete?	-	System OK	-
3	1. Using the Intake Motor Table, measure the voltages at the specified terminals of the motor connector. 2. Change the intake setting and observe the voltage changes. Are these voltages within the specified value?	See the „Intake Motor Table”	Go to *Step 4*	Go to *Step 5*
4	Replace the intake motor. Is the repair complete?	-	System OK	-
5	1. Using the Intake Motor Table, measure the voltages at the specified terminals of the controller connector. 2. Change the intake setting and observe the voltage changes. Are these voltages within the specified value?	See the „Intake Motor Table”	Go to *Step 6*	Go to *Step 7*
6	1. Check the wiring harness and connectors between the controller and the motor that is not performing properly. 2. Repair or replace the wiring harness or the defective terminal. Is the repair complete?	-	System OK	-
7	Check the connector at the controller. Is there a defective terminal?	-	Go to *Step 8*	Go to *Step 9*
8	Repair or replace the terminal. Is the repair complete?	-	System OK	-
9	Replace the controller. Is the repair complete?	-	System OK	-

Intake Control Table

Intake Setting	Intake Motor		
	Connector Terminal		
	Controller/Motor	Controller/Motor	Controller/Motor
	B14/7	A15/6	B13/5
Recirculate	0 V	11-14 V	11-14 V
1/3 Fresh	11-14 V	0 V	11-14 V
Fresh	11-14 V	11-14 V	0 V

COMPRESSOR MAGNETIC CLUTCH DOES NOT ENGAGE

Refer to „A/C Compressor Controls, SOHC" or „A/C Compressor Controls, DOHC" for the electrical schematic diagram of the circuits described in this procedure.

Compressor Magnetic Clutch Does not Engage

Step	Action	Value(s)	Yes	No
1	1. Remove the ATC Controller from the instrument panel, keeping the wiring harness connected. 2. Turn the ignition switch to ON. 3. Turn the A/C switch to ON. 4. Check the voltage between ground and terminal A11 on the controller. Is the voltage within the specified value?	11-14 V	Go to „Insufficient Cooling Diagnosis"	Go to *Step 2*
2	Replace the ATC controller. Is the repair complete?	-	System OK	-

DIAGNOSTIC TROUBLE CODES

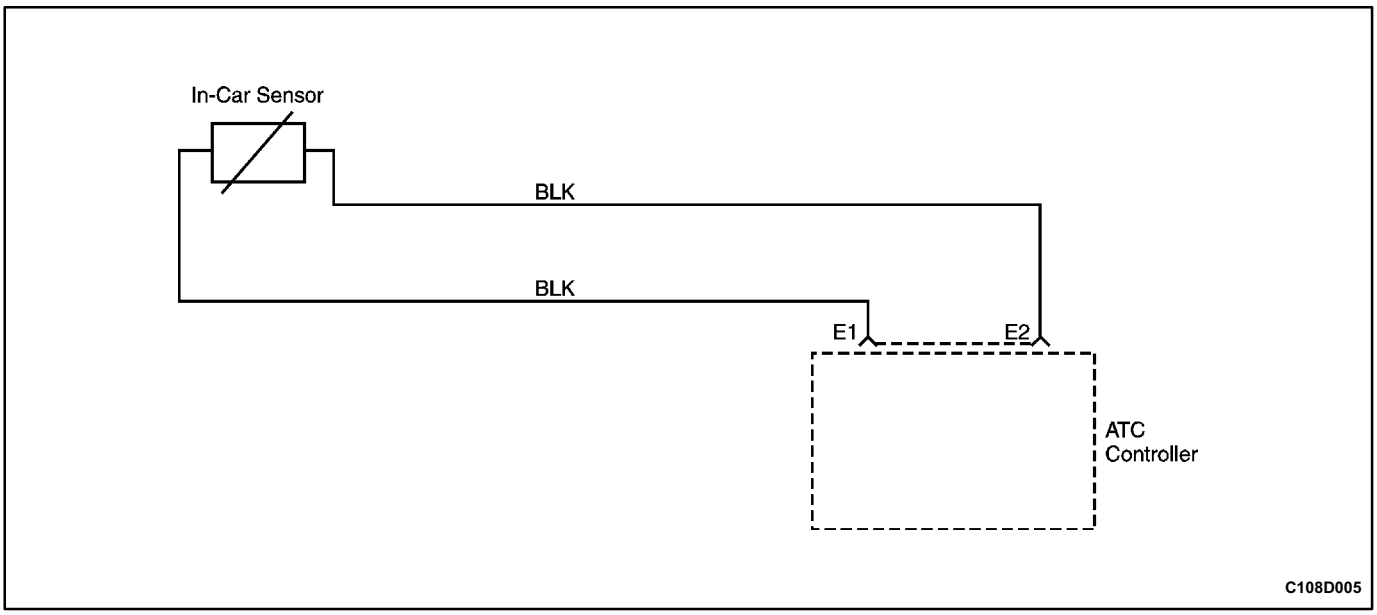

CODE 1 - IN-CAR SENSOR ERROR

This code will set if the output of the in-car sensor indicates a probable short circuit or an open in the sensor or the associated wiring harness, or a malfunction of the ATC controller.

Code 1 - In-Car Sensor Error

Step	Action	Value(s)	Yes	No
1	1. Disconnect the in-car sensor connector from the ATC controller. 2. Examine the wiring from the sensor to the connector and the connector for any signs of damage. 3. Measure the resistance between the incar sensor connector terminals. Is there any sign of damage in the wiring or connector, or is the resistance outside the specified value at 20 to 25°C (68 to 77°F)?	2600-2100 Ω	Go to *Step 2*	Go to *Step 3*
2	Repair the damaged wiring or the connector, or replace the in-car sensor as required. Is the repair complete?	-	System OK	-
3	1. Turn the ignition to ON. 2. Measure the voltage between the two connector terminals on the controller housing. Is the voltage equal to the value specified?	> 4 V	Go to *Step 7*	Go to *Step 4*
4	Check the terminals on the in-car sensor connector. Is any problem found with the connector?	-	Go to *Step 5*	Go to *Step 6*
5	Repair the connector terminals or replace the in-car sensor or ATC controller as required. Is the repair complete?	-	System OK	-

Code 1 - In-Car Sensor Error (Cont'd)

Step	Action	Value(s)	Yes	No
6	1. Reconnect the in-car sensor to the controller. 2. Turn the ignition switch to ON. 3. Observe the temperature display area. Does this display indicate the continuing presence of a code 1 condition?	-	Go to *Step 7*	System OK
7	Replace the ATC controller. Is the repair complete?	-	System OK	-

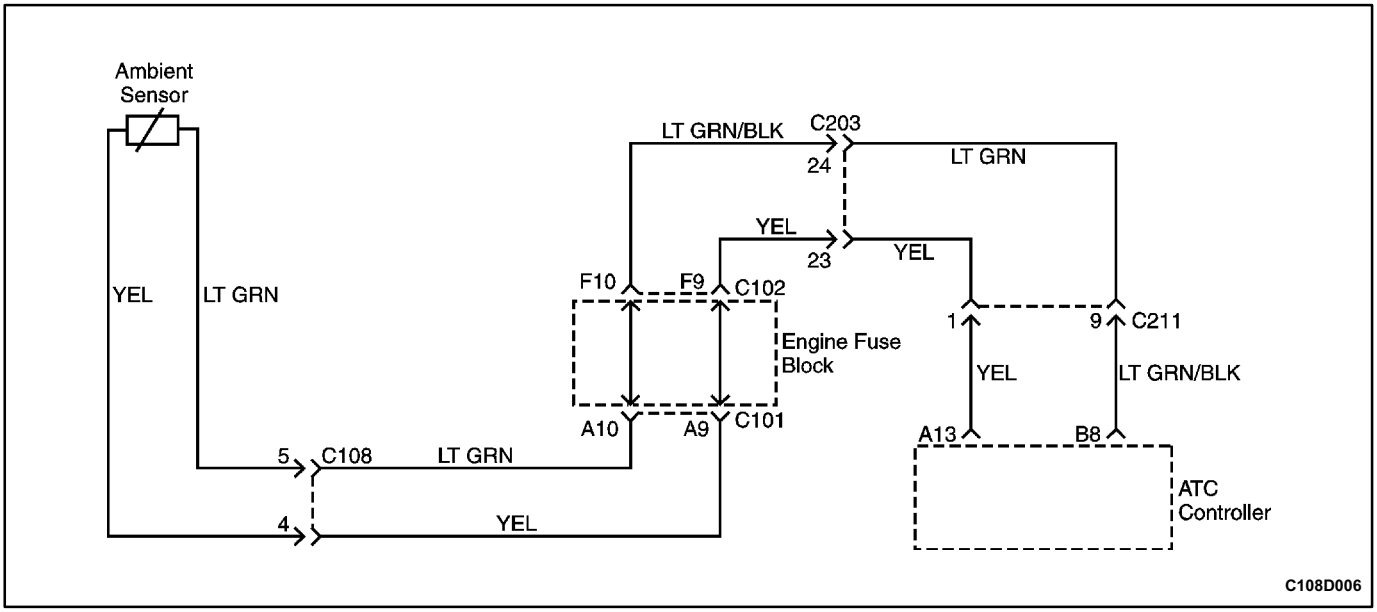

CODE 2 - AMBIENT AIR TEMPERATURE SENSOR ERROR

This code will set if the output of the ambient air temperature sensor indicates a probable short circuit or an open in the sensor or the associated wiring harness, or a malfunction of the ATC controller.

Code 2 - Ambient Air Temperature Sensor Error

Step	Action	Value(s)	Yes	No
1	1. Disconnect the ambient air sensor connector from the front bumper harness. 2. Measure the resistance between the ambient air sensor connector terminals. Is the resistance equal to the specified value at 20 to 25°C (68 to 77°F)?	2600-2100 Ω	Go to *Step 5*	Go to *Step 2*
2	1. Remove the ambient air sensor from behind the front bumper. 2. Examine the wiring for any open or short and examine the connector for any damage. Is there a problem with the wiring or the connector?	-	Go to *Step 3*	Go to *Step 4*
3	Repair the problem found in the ambient air sensor wiring or the connector. Is the repair complete?	-	System OK	-
4	Replace the ambient air sensor. Is the repair complete?	-	System OK	-
5	1. Turn the ignition to ON. 2. Measure the voltage between the two terminals in the ambient air sensor connector on the front bumper harness. Is the voltage equal to the value specified?	> 4 V	Go to *Step 7*	Go to *Step 6*
6	1. Reconnect the in-car sensor to the controller. 2. Turn the ignition switch to ON. 3. Observe the temperature display area. Does this display indicate the continuing presence of a code 2 condition?	-	Go to *Step 8*	System OK

Code 2 - Ambient Air Temperature Sensor Error (Cont'd)

Step	Action	Value(s)	Yes	No
7	1. Pull the ATC controller from the instrument panel, leaving the wiring harness connected. 2. Measure the voltage between terminals A13 and B8 by backprobing the connectors. Is the voltage equal to the value specified?	< 4 V	Go to *Step 8*	Go to *Step 9*
8	Replace the ATC Controller. Is the repair complete?	-	System OK	-
9	1. Trace the wiring for the ambient air sensor from the ATC controller, through connectors C211, C203, C101 and C102 at the engine fuse block, and C108 to the ambient air sensor connector on the front bumper harness. 2. Repair any open or high resistance condition in the wiring or a connector terminal. Is the repair complete?	-	System OK	-

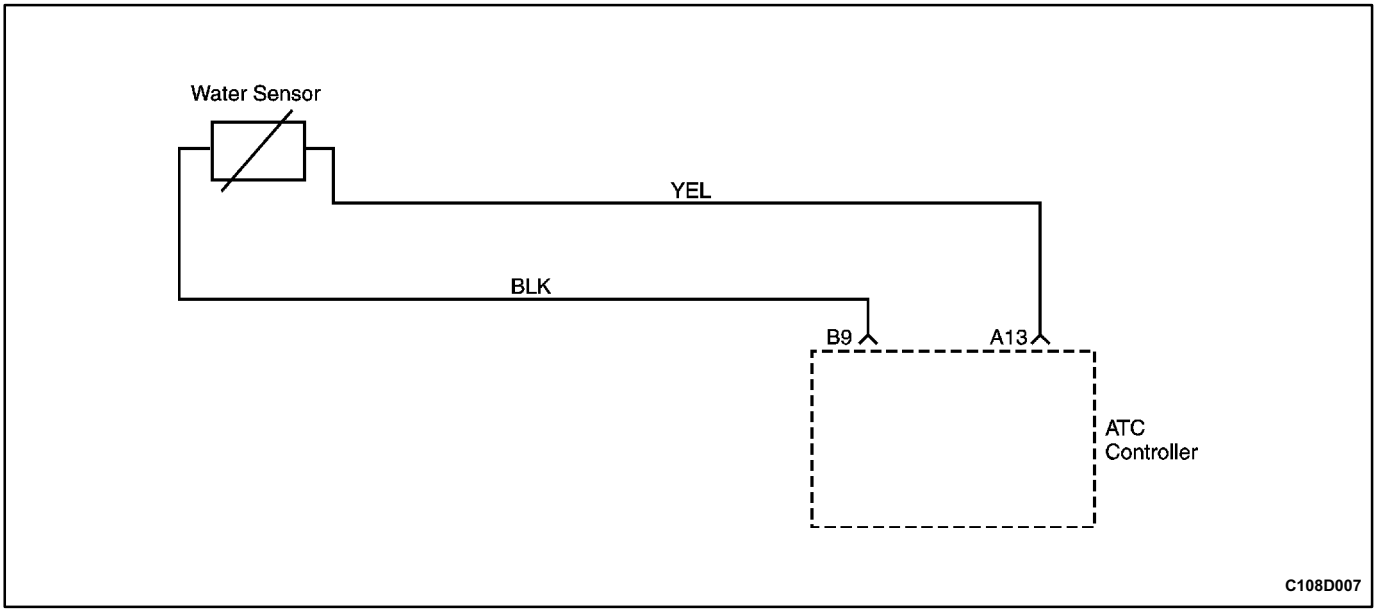

CODE 3 - COOLANT TEMPERATURE SENSOR ERROR

This code will set if the output of the coolant sensor indicates a probable short circuit or an open in the sensor or the associated wiring harness, or a malfunction of the ATC controller.

Code 3 - Coolant Temperature Sensor Error

Step	Action	Value(s)	Yes	No
1	1. Disconnect the coolant temperature sensor connector from the ATC harness. 2. Examine the wiring from the sensor to the connector and examine the connector for any signs of damage. 3. Measure the resistance between the coolant temperature sensor connector terminals. Is there any sign of damage in the wiring or the connector, or is the resistance outside the specified value at 20 to 25°C (68 to 77°F)?	2600-2100 Ω	Go to *Step 2*	Go to *Step 3*
2	Repair the damaged wiring or the connector, or replace the coolant temperature sensor as required. Is the repair complete?	-	System OK	-
3	1. Turn the ignition to ON. 2. Measure the voltage between the two coolant temperature sensor connector terminals on the ATC harness. Is the voltage equal to the value specified?	< 4 V	Go to *Step 7*	Go to *Step 4*
4	Check the terminals on the coolant temperature sensor connector. Is any problem found with the connector?	-	Go to *Step 5*	Go to *Step 6*
5	Repair the connector terminals or replace the coolant temperature sensor or ATC controller as required. Is the repair complete?	-	System OK	-

Code 3 - Coolant Temperature Sensor Error (Cont'd)

Step	Action	Value(s)	Yes	No
6	1. Reconnect the coolant temperature sensor to the ATC harness. 2. Turn the ignition switch to ON. 3. Observe the temperature display area. Does this display indicate the continuing presence of a code 3 condition?	-	Go to *Step 9*	System OK
7	1. Pull the ATC controller from the instrument panel, leaving the wiring harness connected. 2. Measure the voltage between terminals A13 and B9 by backprobing the connectors. Is the voltage equal to the value specified?	< 4 V	Go to *Step 9*	Go to *Step 8*
8	1. Trace the wiring from controller terminals A13 and B9 to the coolant temperature sensor connector terminals on the ATC harness connectors. 2. Repair any open or high resistance found in the wiring or connector terminals. Is the repair complete?	-	System OK	-
9	Replace the ATC controller. Is the repair complete?	-	System OK	-

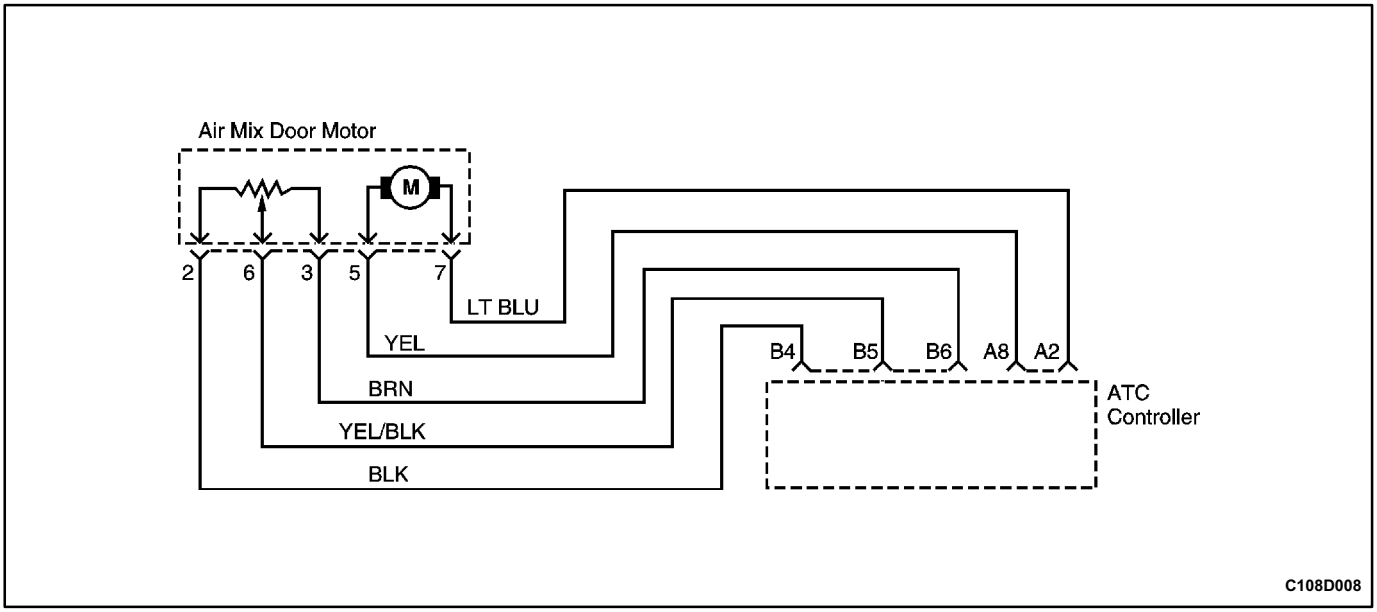

CODE 4 - AIR MIX DOOR ERROR

This code will set if the output of the mix door indicator indicates that the door opening angle is out of range or does not change value when the door should be moving. This would indicate a short circuit or an open in the sensor or the associated wiring harness, a door motor that is not operating, or a malfunction of the ATC controller.

Code 4 - Air Mix Door Error

Step	Action	Value(s)	Yes	No
1	1. Disconnect the I/P wiring harness connector from the air mix door (AMD) motor. 2. Use an ohmmeter to measure the resistance between terminals 5 and 7 on the AMD motor. Does the measured resistance indicate an open or a shorted condition?	Open = ∞, Short = ≈ 0 Ω	Go to *Step 4*	Go to *Step 2*
2	Measure the resistance between terminals 2 and 3 on the AMD motor. Is the resistance equal to the value specified?	≈ 3000 Ω	Go to *Step 3*	Go to *Step 4*
3	Measure the resistance between terminals 6 and 2 and between terminals 6 and 3 on the AMD motor. Do these resistances add to approximately the value measured between terminals 2 and 3?	≈ 3000 Ω	Go to *Step 5*	Go to *Step 4*
4	Replace the AMD motor. Is the repair complete?	-	System OK	-
5	Check the connector terminals at the AMD motor and the wiring in the ATC harness. Is there a problem with any terminal on either the harness connector or the motor connector or the wiring?	-	Go to *Step 6*	Go to *Step 7*
6	Repair the problem found with a connector terminal or the wiring, or replace the motor as required. Is the repair complete?	-	System OK	-

Code 4 - Air Mix Door Error (Cont'd)

Step	Action	Value(s)	Yes	No
7	1. Remove the ATC controller from the instrument panel. 2. Disconnect the harness connectors from the ATC controller. 3. Examine the connector terminals on the harness connectors and the controller connectors and the harness wiring. Is there a problem with any of these connectors or the wiring?	-	Go to *Step 8*	Go to *Step 9*
8	Repair the problem found with a connector terminal or wiring. Is the repair complete?	-	System OK	-
9	Check continuity in the harness between the controller connectors and the AMD motor connector. ● Controller terminal A2 to motor terminal 7. ● Controller terminal A8 to motor terminal 5. ● Controller terminal B4 to motor terminal 2. ● Controller terminal B5 to motor terminal 6. ● Controller terminal B6 to motor terminal 3. Does the continuity equal the specified value?	≈ 0 Ω	Go to *Step 10*	Go to *Step 11*
10	Repair the continuity problem. Is the repair complete?	-	System OK	-
11	1. Reconnect the AMD motor to the ATC harness. 2. Reconnect the ATC harness connectors to the controller. 3. Turn the ignition to ON. 4. Use backprobing for voltage measurements. 5. Measure the voltage between ground and terminal B5 at the controller. Is the voltage equal to the specified value?	< 4 V	Go to *Step 12*	Go to *Step 14*
12	1. Set the temperature controller to 18°C (64°F). 2. Connect a voltmeter between ground and terminal A8 at the controller. It should display about 12 v. 3. Raise the temperature setting on the controller to 32°C (90°F). Does the voltage equal the specified value?	Drops from 12 V to 0 V	Go to *Step 13*	Go to *Step 15*
13	1. Connect a voltmeter between ground and terminal A2 at the controller. It should display about 12 v. 2. Change the temperature setting to 18°C (64°F). Does the voltage equal the specified value?	Drops from 12 V to 0 V	Go to *Step 20*	Go to *Step 15*
14	1. Recheck the wiring harness and the connector terminals associated with controller terminals B4, B5, and B6, and AMD motor terminals 2, 6, and 3. 2. Repair any problem found. Is the repair complete?	-	System OK	-
15	Recheck all wiring circuits between the controller and the AMD motor. Is there a problem in the wiring or the connectors?	-	Go to *Step 16*	Go to *Step 17*

Code 4 - Air Mix Door Error (Cont'd)

Step	Action	Value(s)	Yes	No
16	Repair the problem in the wiring between the ATC controller and the AMD motor. Is the repair complete?	-	System OK	-
17	Recheck the AMD motor. Is there a problem in the AMD motor?	-	Go to *Step 18*	Go to *Step 19*
18	Replace the AMD motor. Is the repair complete?	-	System OK	-
19	Replace the controller. Is the repair complete?	-	System OK	-
20	Observe the operation of the air mix door when the temperature setting is changed. Does the door move normally?	-	Go to *Step 22*	Go to *Step 21*
21	Repair or replace the air mix door. Is the repair complete?	-	System OK	-
22	Observe the operation of the AMD motor when the temperature setting is changed. Does the motor operate normally?	-	Go to *Step 24*	Go to *Step 23*
23	Replace the AMD motor. Is the repair complete?	-	System OK	-
24	Reconnect everything and test the system. Does code 4 reset?	-	Go to *Step 25*	System OK
25	Replace the controller. Is the repair complete?	-	System OK	-

BLANK

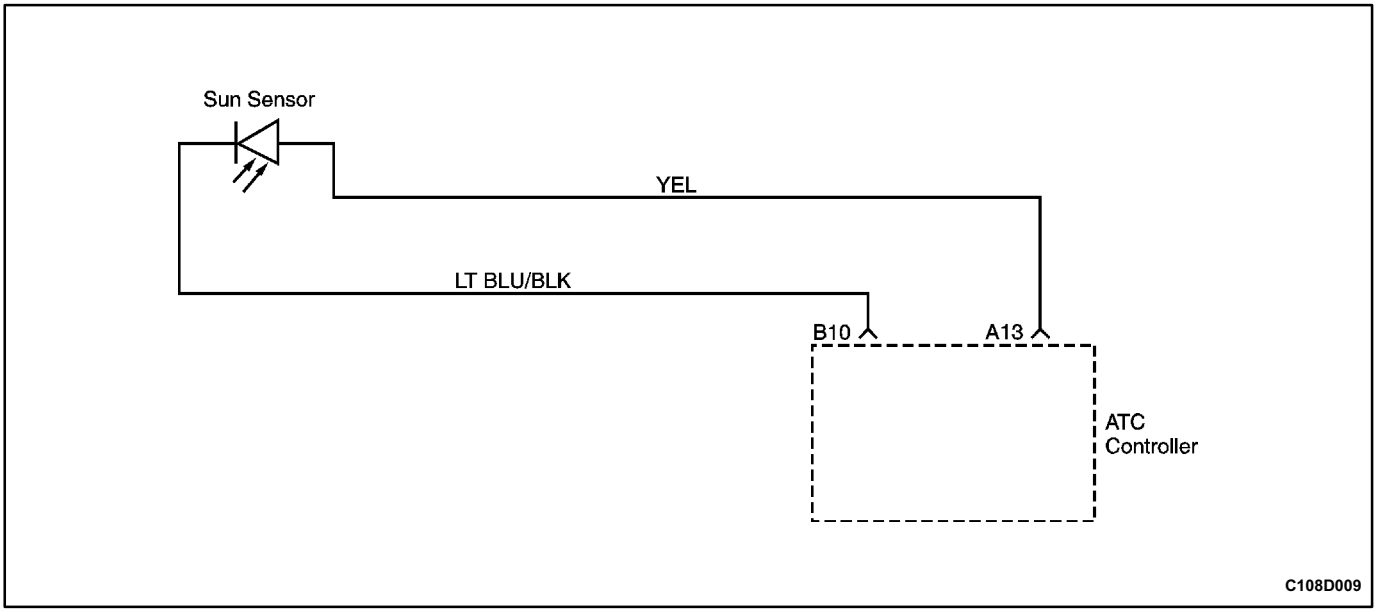

CODE 5 - SUN SENSOR ERROR

This code will set if the output of the sun sensor indicates a probable short circuit or an open in the sensor or the associated wiring harness, or a malfunction of the ATC controller.

Code 5 - Sun Sensor Error

Step	Action	Value(s)	Yes	No
1	1. Lift the sun sensor from the top of the dashboard. 2. Secure the ATC harness below the sun sensor connector so it cannot fall through the opening in the top of the dashboard. 3. Disconnect the sun sensor connector from the ATC harness. 4. Examine the wiring from the sensor to the connector, and examine the connector for any signs of damage. 5. Measure the resistance between the sun sensor connector terminals. Is there any sign of damage in the wiring or connector or does the resistance equal the value specified?	≈ 0 Ω	Go to *Step 2*	Go to *Step 3*
2	Repair the damaged wiring or the connector, or replace the sun sensor as required. Is the repair complete?	-	System OK	-
3	1. Turn the ignition to ON. 2. Measure the voltage between the two sun sensor connector terminals on the ATC harness. Is the voltage equal to the value specified?	< 4 V	Go to *Step 7*	Go to *Step 4*
4	Check the terminals on the sun sensor connector. Is any problem found with the connector?	-	Go to *Step 5*	Go to *Step 6*
5	Repair the connector terminals or replace the sun sensor or ATC controller as required. Is the repair complete?	-	System OK	-

Code 5 - Sun Sensor Error (Cont'd)

Step	Action	Value(s)	Yes	No
6	1. Reconnect the sun sensor to the ATC harness. 2. Turn the ignition switch to ON. 3. Observe the temperature display area. Does this display indicate the continuing presence of a code 5 condition?	-	Go to *Step 9*	System OK
7	1. Pull the ATC controller from the instrument panel, leaving the wiring harness connected. 2. Measure the voltage between terminals A13 and B10 by backprobing the connectors. Is the voltage equal to the value specified?	< 4 V	Go to *Step 9*	Go to *Step 8*
8	1. Trace the wiring from controller terminals A13 and B10 to the sun sensor connector terminals on the ATC harness connectors. 2. Repair any open or high resistance found in the wiring or connector terminals. Is the repair complete?	-	System OK	-
9	Replace the ATC controller. Is the repair complete?	-	System OK	-

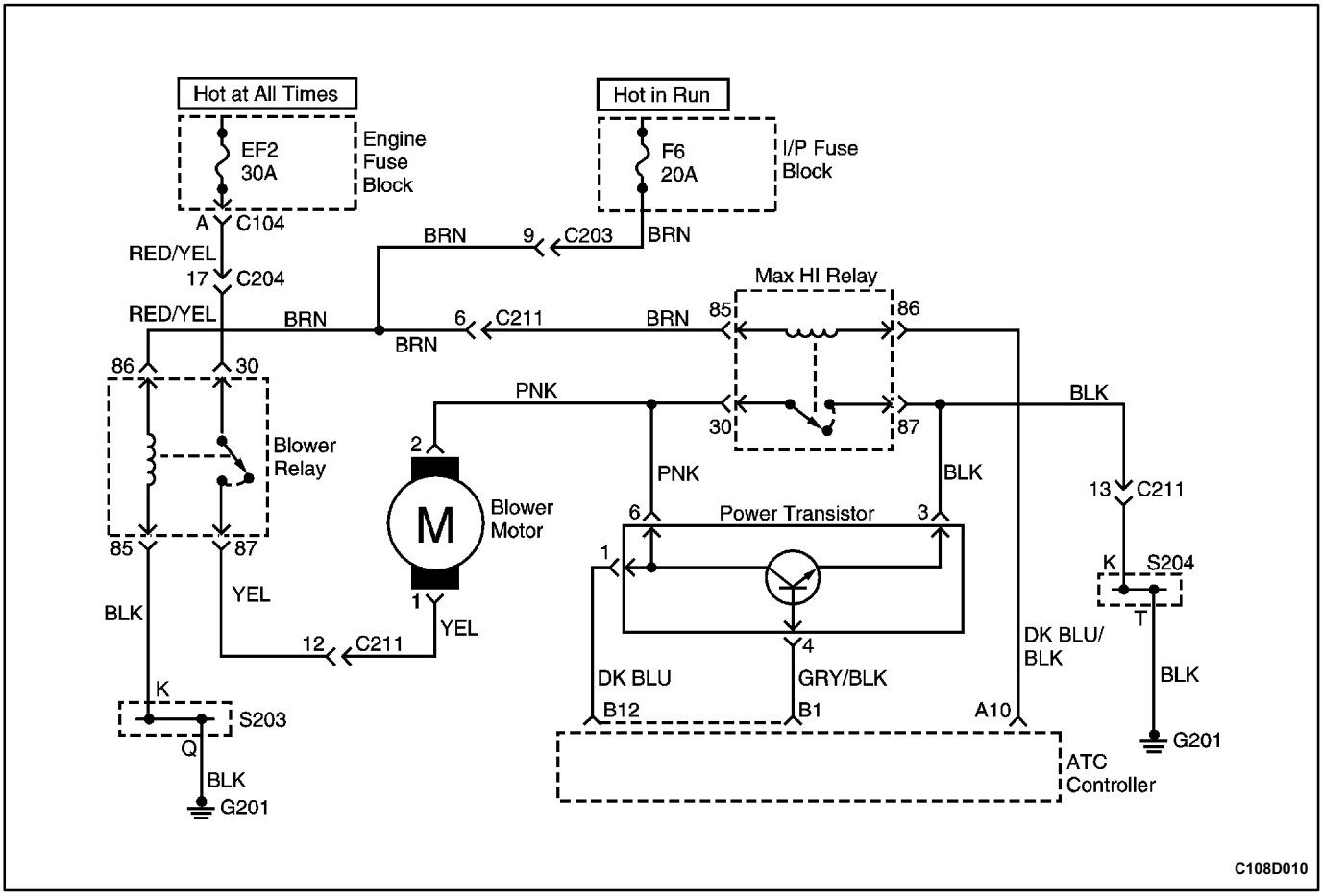

CODE 6 - POWER TRANSISTOR ERROR

Step	Action	Value(s)	Yes	No
1	1. Disconnect the ATC controller connectors A and B. 2. Disconnect the connectors from the power transistor. 3. Measure the resistance circuit GRY/BLK from terminal 4 of the power transistor to terminal B1 of the ATC controller. Does the resistance equal the specified value?	≈ 0 Ω	Go to *Step 2*	Go to *Step 6*
2	Measure the resistance in the circuit from terminal 1 of the power module control unit to terminal B12 of the ATC controller. Does the resistance equal the specified value?	≈ 0 Ω	Go to *Step 3*	Go to *Step 6*
3	1. Reconnect the wiring harness to the ATC controller and to the power module control unit. 2. Turn the ignition switch to ON. 3. Measure the voltage from ground to terminal B12 of the ATC controller. 4. Cycle the fan speed controller manually from the lowest (speed 1) to the highest speed (5). Do the voltages measured match approximately the specified values within ±0.5 V?	1: 8.8 V 2: 6.8 V 3: 4.4 V 4: 2.7 V 5: 0 V	Go to *Step 4*	Go to *Step 5*

Code 6 - Power Transistor Error (Cont'd)

Step	Action	Value(s)	Yes	No
4	Replace the ATC controller. Is the repair complete?	-	System OK	-
5	Measure the resistance in circuit PNK between terminal 6 of the power transistor and the blower motor terminal 2. Does the resistance equal the specified value?	≈ 0 Ω	Go to *Step 7*	Go to *Step 6*
6	Repair or replace the wiring harness for circuit PNK. Is the repair complete?	-	System OK	-
7	Check the wiring harness of the motor and power supply. ● Check the blower relay. ● Check fuse EF2. Is there any problem in the wiring, the relay, or the fuse?	-	Go to *Step 9*	Go to *Step 8*
8	Replace the power transistor. Is the repair complete?	-	System OK	-
9	Repair or replace the wiring harness, the relay, or the fuse as required. Is the repair complete?	-	System OK	-

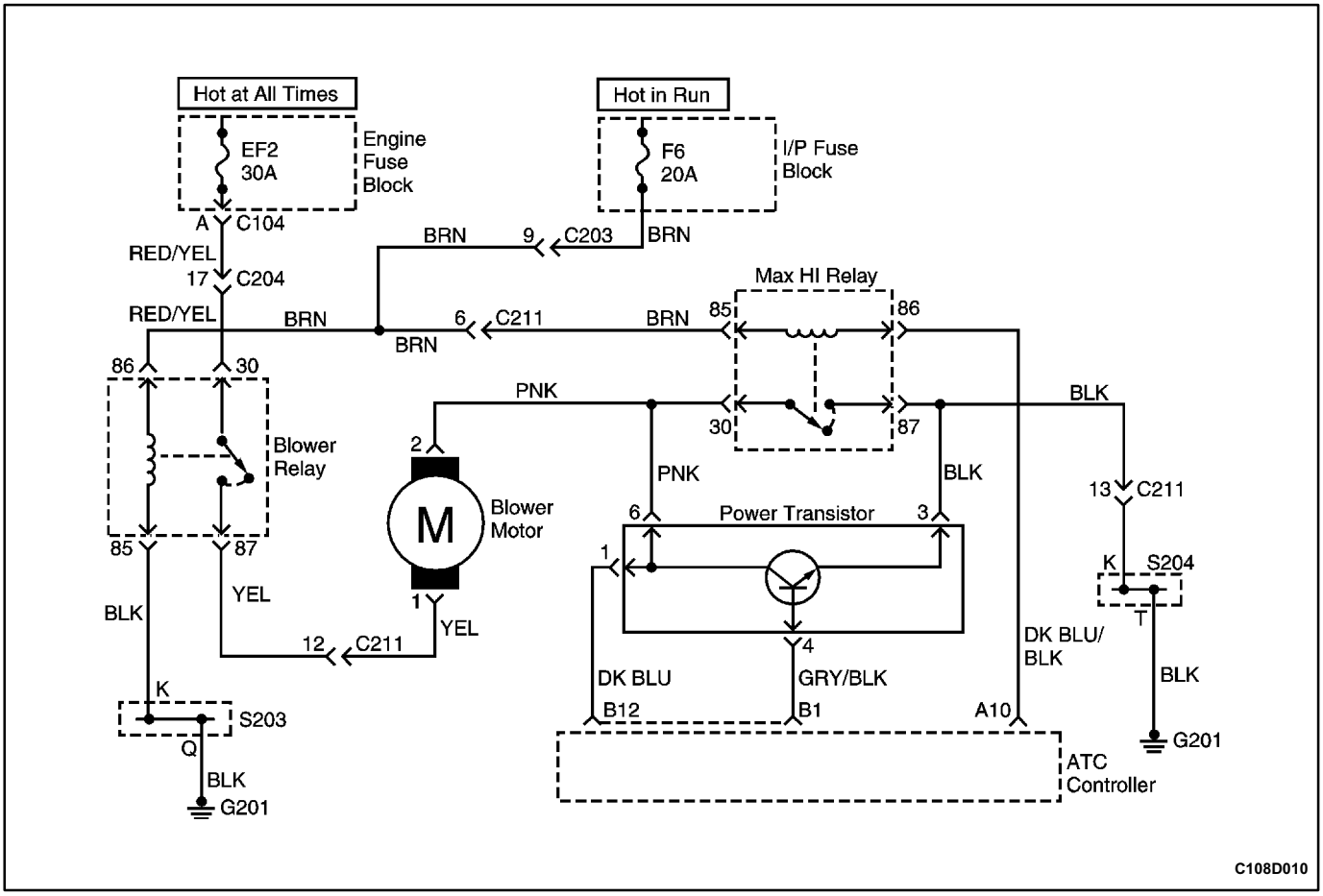

CODE 7 - MAXHI RELAY ERROR

Step	Action	Value(s)	Yes	No
1	1. Turn the ignition switch ON. 2. Set the blower speed manually for 5th speed. 3. Measure voltage between the ATC controller terminal A10 and ground. Is the voltage approximately equal to the specified value?	≈ 0 V	Go to *Step 3*	Go to *Step 2*
2	Replace the ATC controller. Is the repair complete?	-	System OK	-
3	1. Check the wiring harness associated with the MAX-HI relay for defects or high terminal resistance. 2. Repair any defects found. Is the repair complete?	-	System OK	Go to *Step 4*
4	Replace the MAX-HI relay. Is the repair complete?	-	System OK	-

MAINTENANCE AND REPAIR

ON-VEHICLE SERVICE

GENERAL A/C SYSTEM SERVICE PROCEDURES

GENERAL SERVICE PROCEDURES

Refer to *Section 7B, Manual Control Heating, Ventilation, and Air Conditioning System*, for details of the following procedures:

- Discharging, Adding Oil, Evacuating, and Charging Procedures for A/C System.
- Handling of Refrigerant Lines and Fittings.
- Handling Refrigerant.
- Maintaining Chemical Stability in the Refrigeration System.
- O-Ring Replacement.

SERVICEABLE COMPONENTS

COMMON HVAC COMPONENTS

Those components used in non-automatic systems are covered in other sections of this manual.

Refer to *Section 7A, Heating and Ventilation System* for the following procedures:

- Blower Motor.
- Heater Hoses.

Refer to *Section 7B, Manual Control Heating, Ventilation, and Air Conditioning System* for the following procedures:

- A/C Pressure Transducer.
- Compressor to Condenser Hose.
- Compressor.
- Condenser.
- Evaporator to Compressor Pipe.
- Evaporator to Receiver-Dryer Pipe.
- Receiver-Dryer.

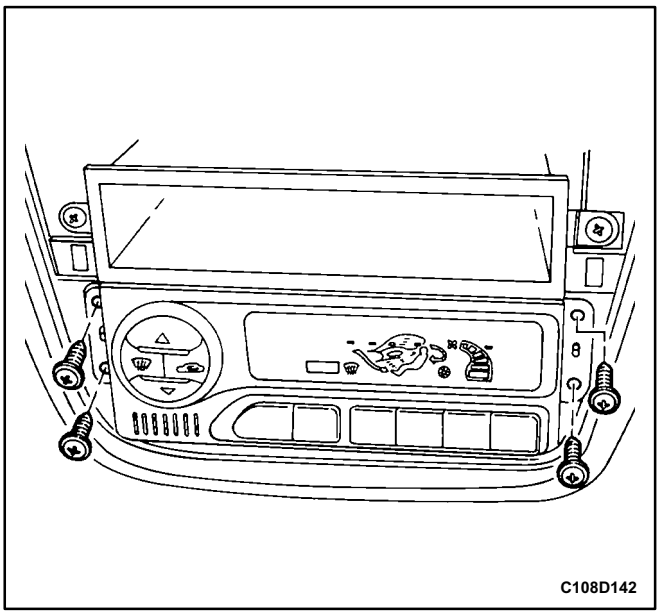

AUTOMATIC TEMPERATURE CONTROL ASSEMBLY

Removal Procedure

1. Disconnect the negative battery cable.
2. Remove the audio trim panel. Refer to *Section 9F, Audio Systems.*
3. Remove the control assembly retaining screws.
4. Pull out the unit to gain access to the rear.
5. Disconnect the electrical connectors.
6. Remove the air inlet tube.
7. Remove the automatic temperature control assembly.

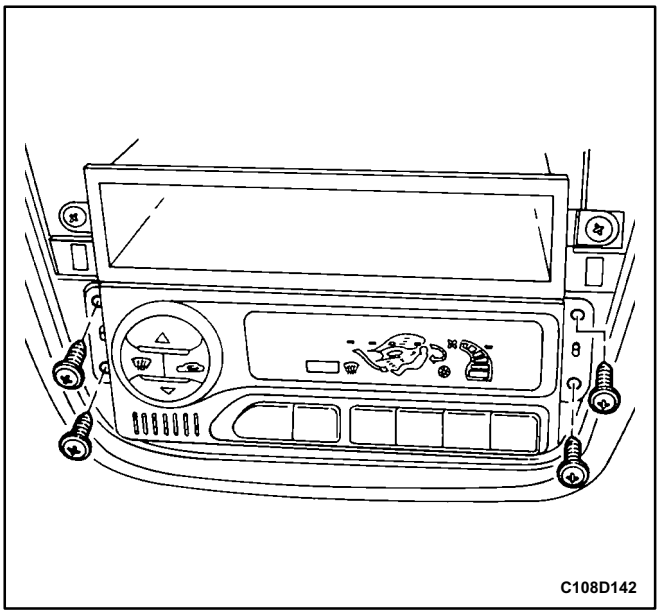

Installation Procedure

1. Connect the air inlet tube.
2. Connect the electrical connectors.
3. Position the automatic temperature control assembly and install the retaining screws.

   Tighten

   Tighten the control assembly retaining screws to 4 N•m (35 lb•in).
4. Install the audio trim panel. Refer to *Section 9F, Audio Systems.*
5. Connect the negative battery cable.

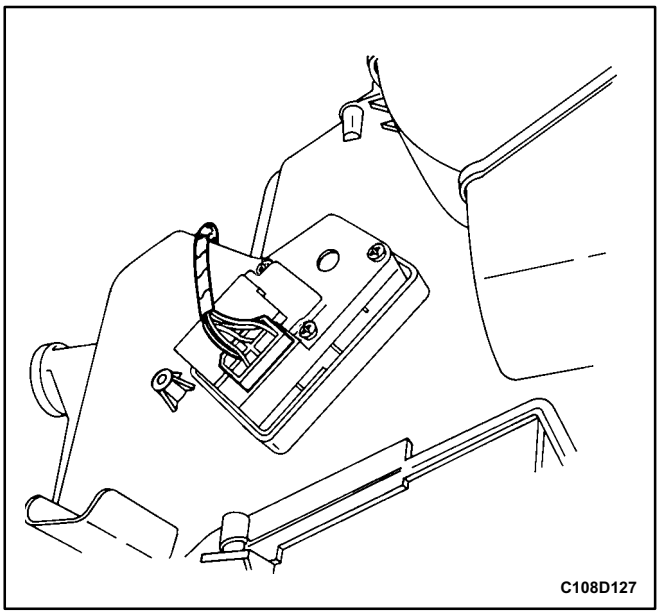

AIR MIX DOOR MOTOR

(Left-Hand Drive Shown, Right-Hand Drive Similar)

Removal Procedure

1. Disconnect the negative battery cable.
2. Disconnect the electrical connector.

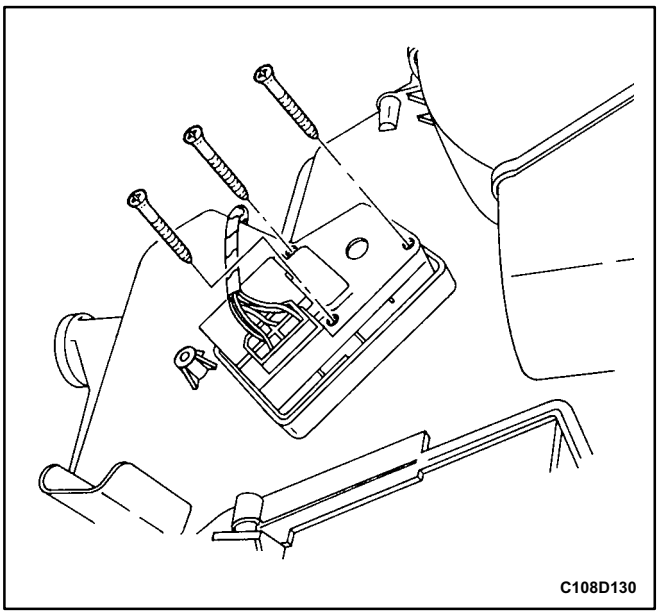

3. Remove the motor retaining bolts.
4. Slide the air mix door motor off the door shaft and remove the motor.

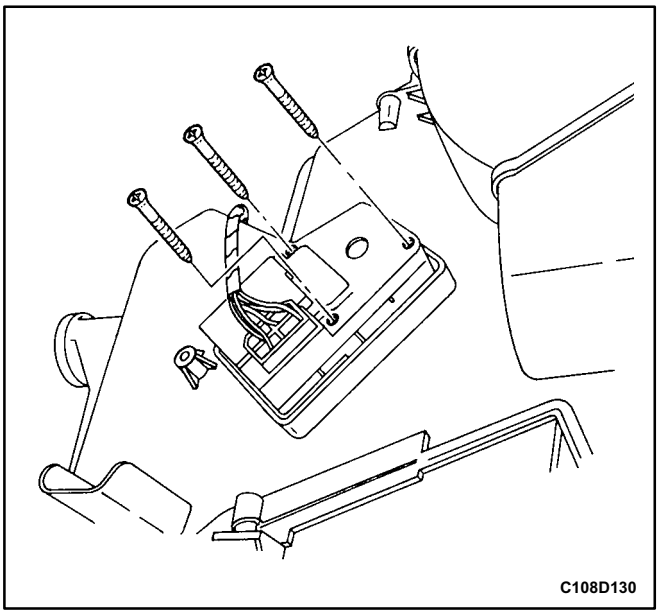

Installation Procedure

1. Position the air mix door motor onto the door shaft.
2. Install the motor retaining bolts and tighten.

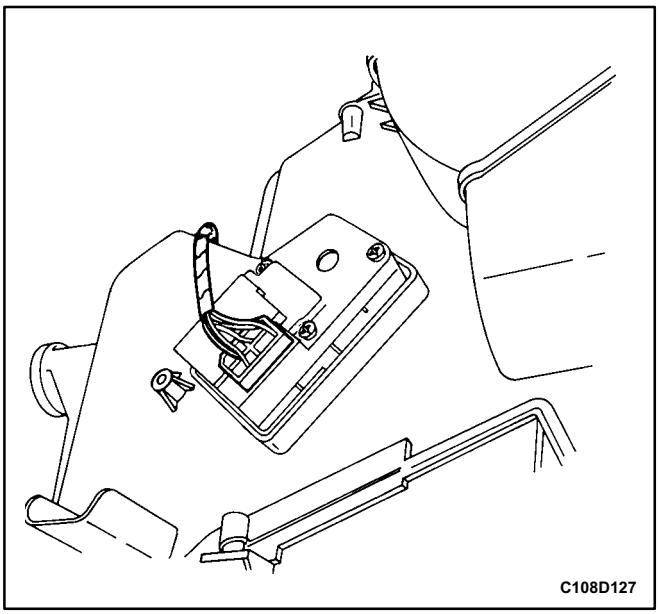

3. Connect the electrical connector.
4. Connect the negative battery cable.

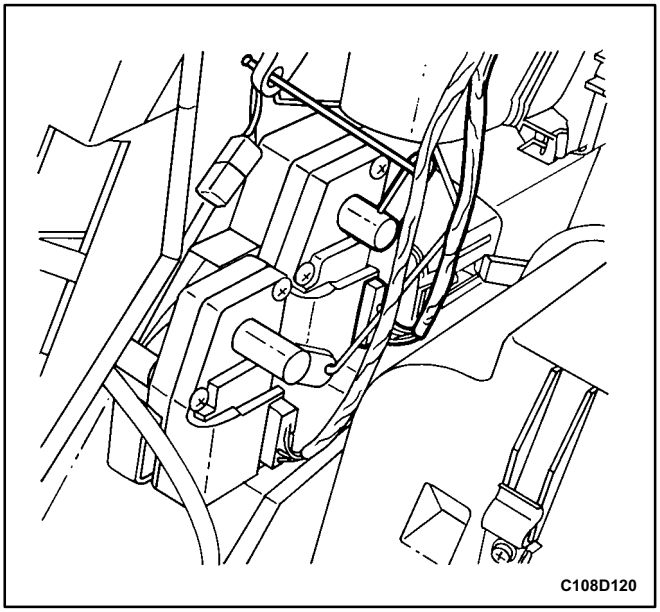

HEATER/DEFROSTER DOOR MOTOR

(Left-Hand Drive Shown, Right-Hand Drive Similar)

Removal Procedure

1. Disconnect the negative battery cable.
2. Remove the heater/air distributor case assembly. Refer to „Heater/Air Distributor Case Assembly" in this section.
3. Disconnect the electrical connector.
4. Remove the actuating rod by snapping it out of the lever with needle nose pliers.

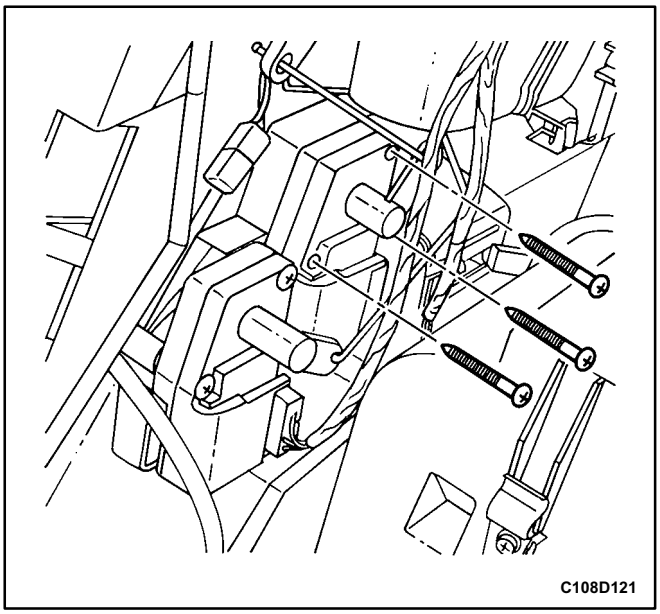

5. Remove the motor lever from its shaft by pulling the lever off.
6. Remove the motor retaining bolts.
7. Remove the heater/defroster door motor.

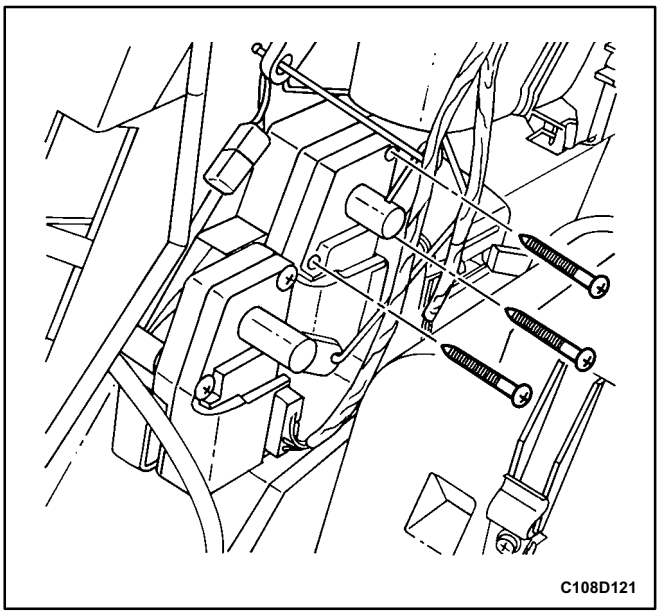

Installation Procedure

1. Install the heater/defroster door motor.
2. Install the retaining bolt and tighten.

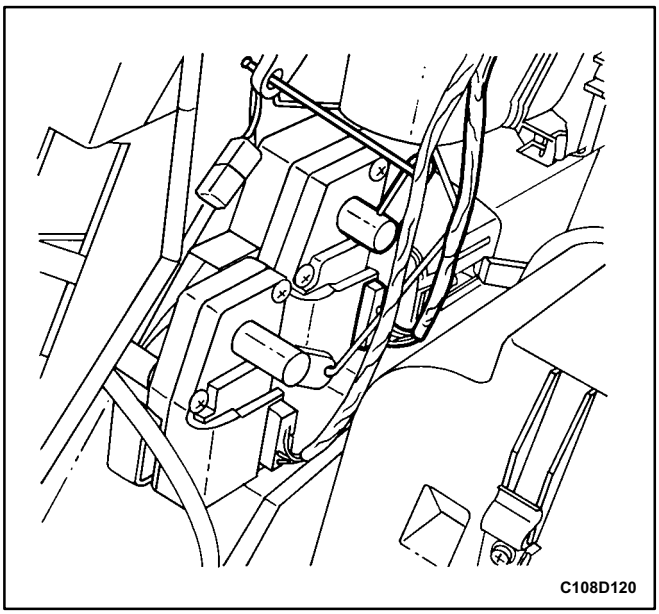

3. Press the lever onto the motor shaft.
4. Install the actuating rod onto the lever.
5. Connect the electrical connector.
6. Install the heater/air distributor case assembly. Refer to „Heater Air/Distributor Case Assembly" in this section.
7. Connect the negative battery cable.

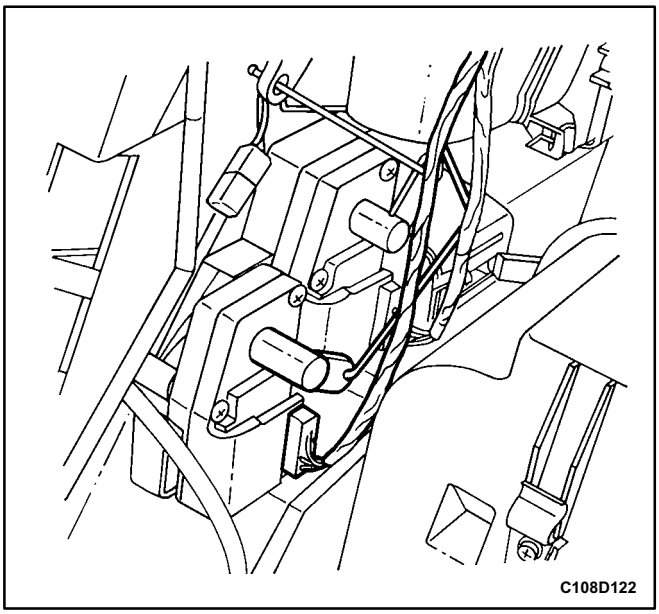

MODE DOOR MOTOR

(Left-Hand Drive Shown, Right-Hand Drive Similar)

Removal Procedure

1. Disconnect the negative battery cable.
2. Remove the heater/air distributor case assembly. Refer to „Heater/Air Distributor Case Assembly in this section.
3. Disconnect the electrical connector.
4. Remove the motor actuating rod by snapping out it out of the lever with needle nose pliers.

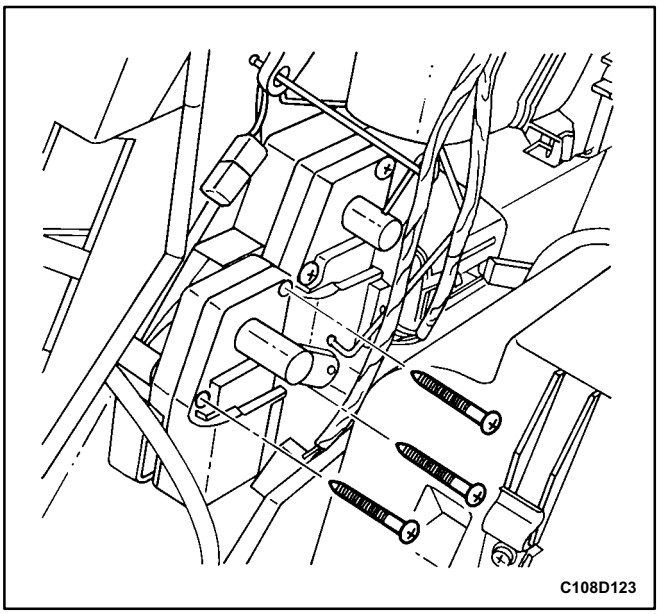

5. Remove the motor lever.
6. Remove the motor retaining bolts.
7. Remove the mode door motor.

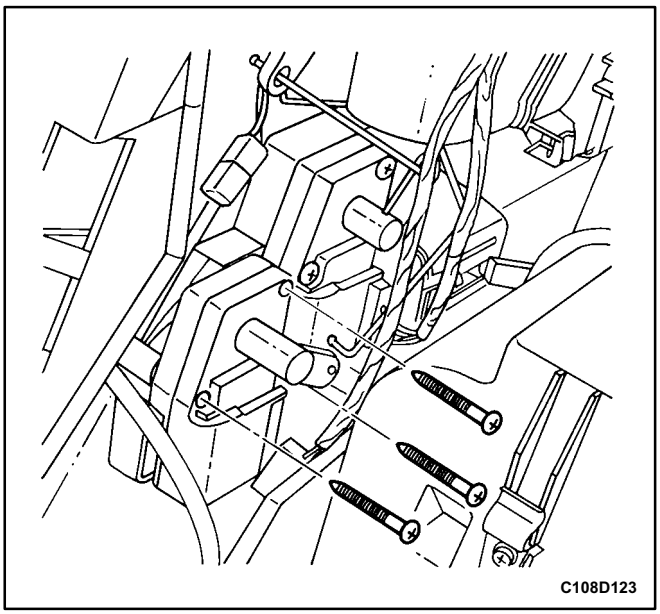

Installation Procedure

1. Install the mode door motor.
2. Install the motor retaining bolts and tighten.

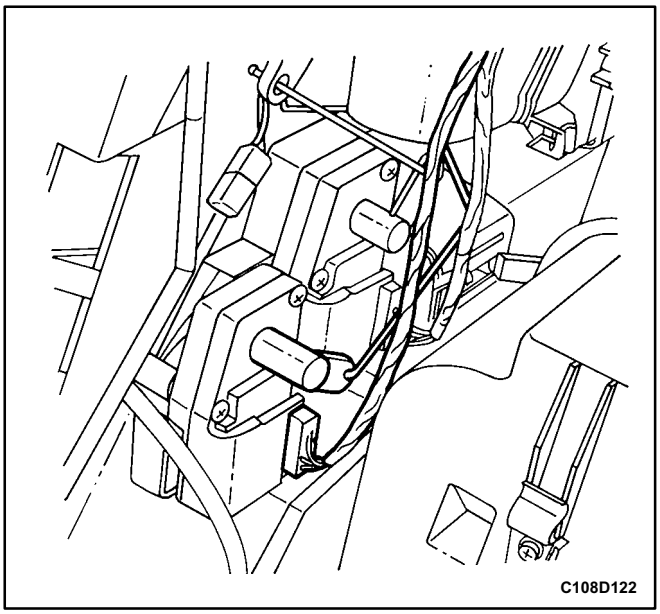

3. Install the motor lever by pressing it onto its shaft.
4. Install the actuating rod.
5. Connect the electrical connector.
6. Install the heater/air distributor case. Refer to „Heater/Air Distributor Case Assembly" in this section.
7. Connect the negative battery cable.

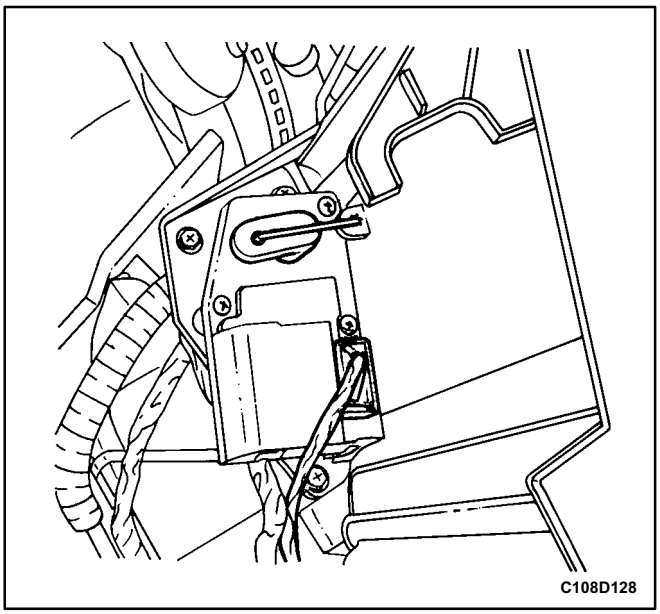

INLET AIR DOOR MOTOR

(Left-Hand Drive Shown, Right-Hand Drive Similar)

Removal Procedure

1. Disconnect the negative battery cable.
2. Remove the glove box. Refer to *Section 9E, Instrumentation/Driver Information.*
3. Remove the actuating rod by snapping the rod out of the lever with needle nose pliers
4. Remove the actuating lever.
5. Disconnect the electrical connector.

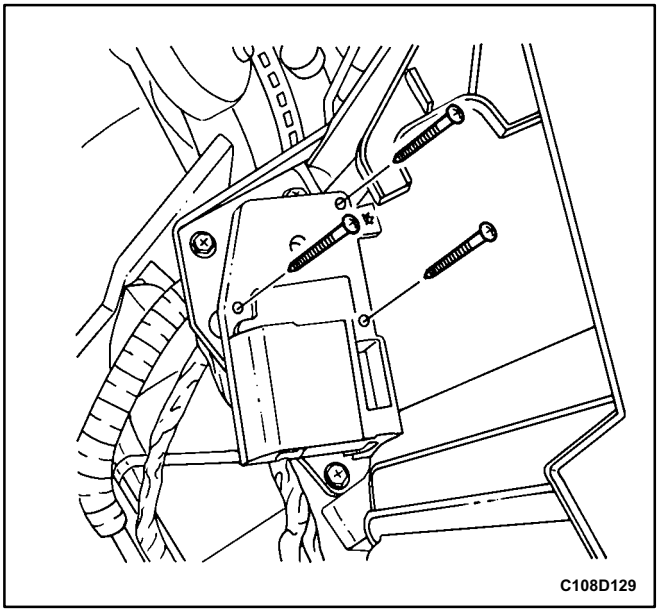

6. Remove the motor retaining bolts.
7. Remove the motor.

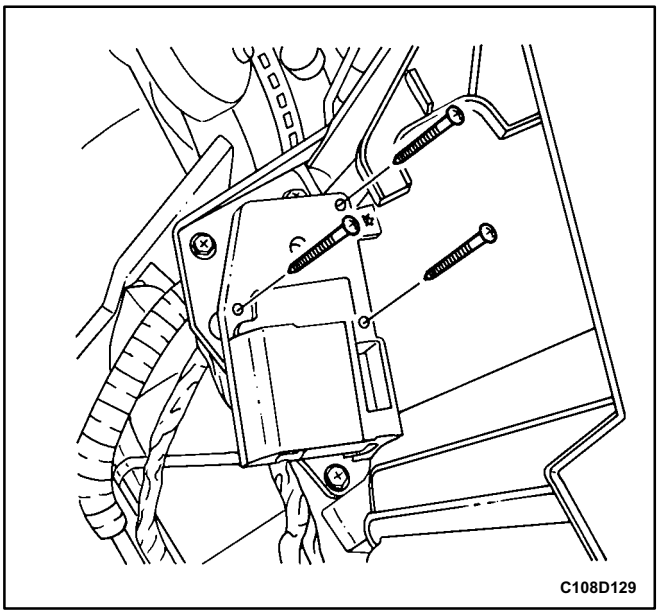

Installation Procedure

1. Install the motor.
2. Install the motor retaining bolts and tighten.

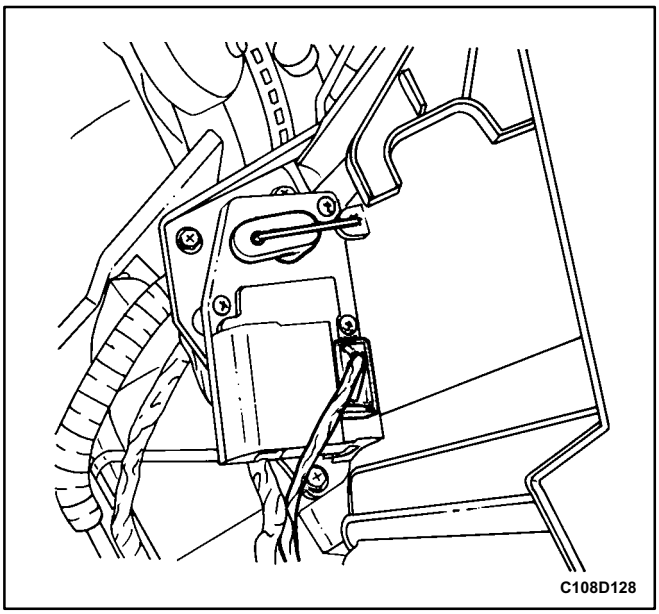

3. Install the actuating lever.
4. Install the actuating rod.
5. Connect the electrical connector.
6. Install the glove box. Refer to *Section 9E, Instrumentation/Driver Information.*
7. Connect the negative battery cable.

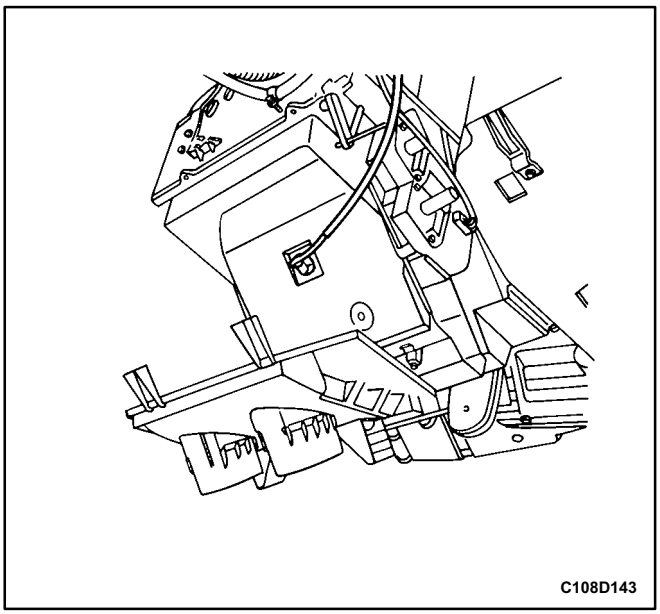

COOLANT TEMPERATURE SENSOR

(Left-Hand Drive Shown, Right-Hand Drive Similar)

Removal Procedure

1. Disconnect the negative battery cable.
2. Remove the audio system and the center tray. Refer to *Section 9F, Audio Systems*.
3. Remove the glove box. Refer to *Section 9E, Instrumentation/Driver Information.*
4. Remove the heater/air distributor case assembly lower cover screws.
5. Remove the heater/air distributor case assembly lower cover to gain access to the coolant temperature sensor.

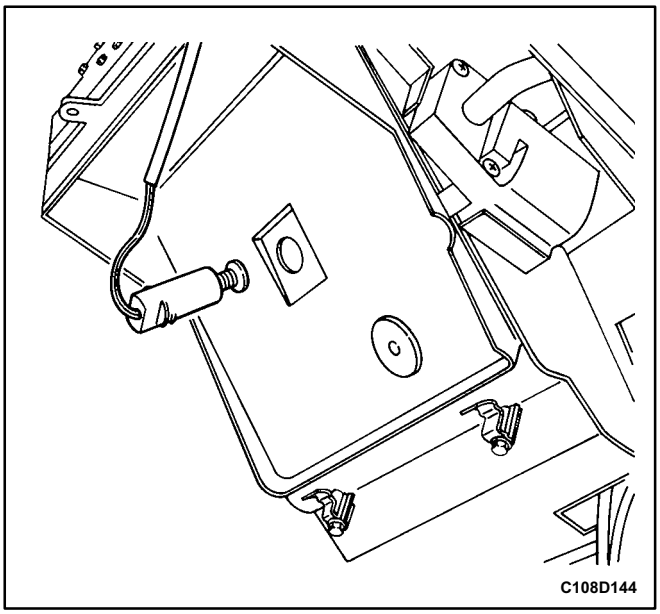

6. Turn the sensor to release it from the heater/air distributor case housing.
7. Disconnect the electrical connector.

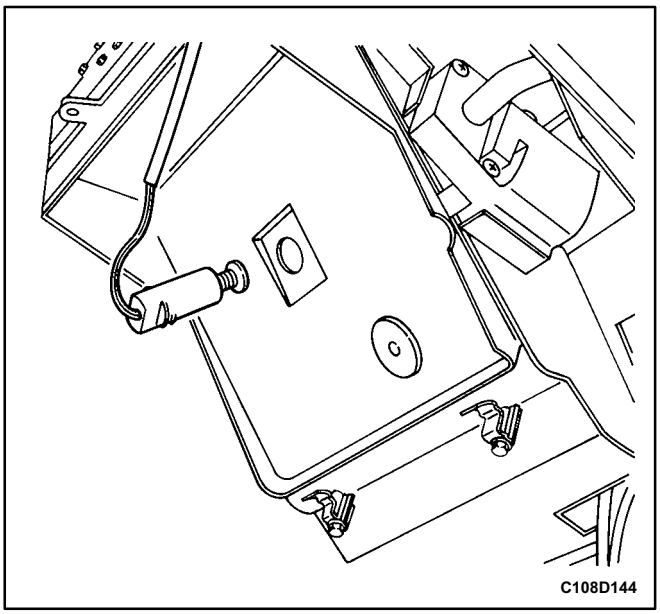

Installation Procedure

1. Install the coolant temperature sensor into the heater/air distributor case housing and turn the sensor to lock it.
2. Connect the electrical connector.

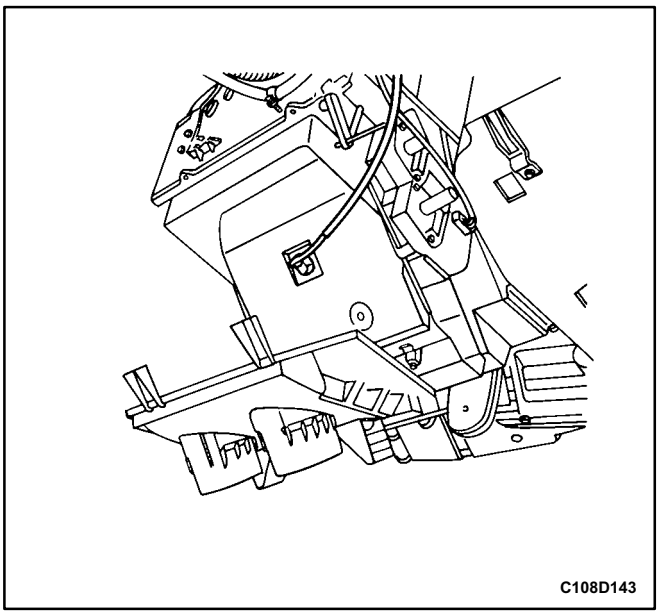

3. Install the heater/air distributor case assembly lower cover into position.
4. Install the heater/air distributor case assembly lower cover retaining screws and tighten.
5. Install the audio system and the center tray. Refer to *Section 9F, Audio Systems*.
6. Install the glove box. Refer to *Section 9E, Instrumentation/Driver Information.*
7. Connect the negative battery cable.

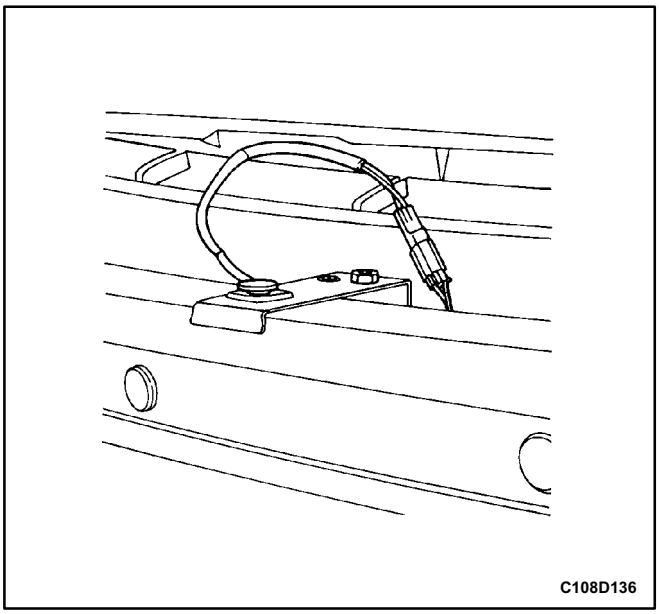

AMBIENT AIR TEMPERATURE SENSOR

Removal Procedure

1. Disconnect the negative battery cable.
2. Disconnect the ambient air temperature sensor electrical connector.
3. Remove the retaining nut from the bracket.
4. Remove the ambient air temperature sensor.

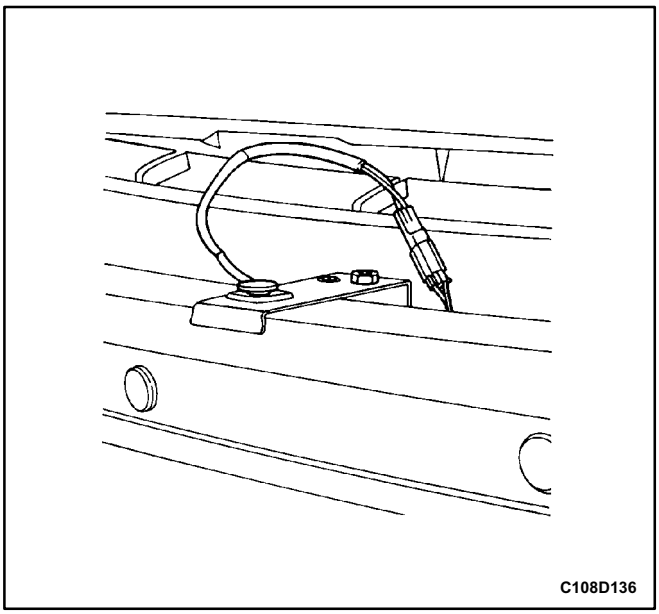

Installation Procedure

1. Position the ambient air temperature sensor into its bracket.
2. Install the retaining nut to the bracket.

   Tighten

   Tighten the ambient air temperature retaining bracket nut to 6 N•m (53 lb•in).
3. Connect the electrical connector.
4. Connect the negative battery cable.

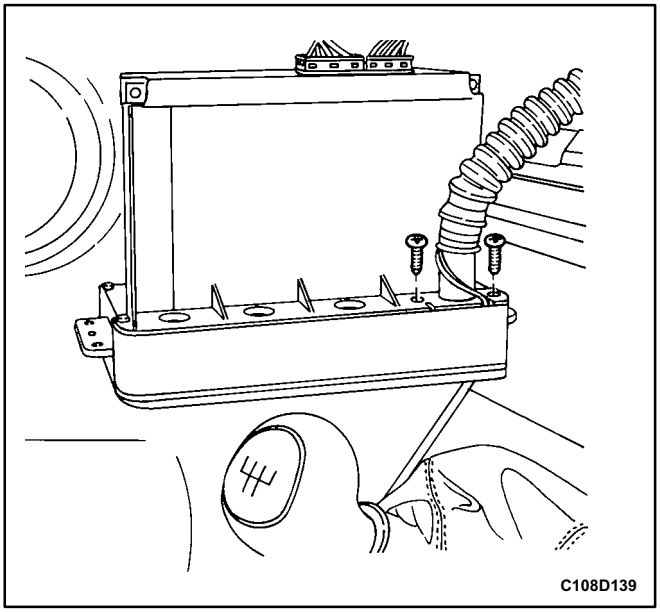

INCAR TEMPERATURE SENSOR

Removal Procedure

1. Disconnect the negative battery cable.
2. Remove the automatic temperature control assembly. Refer to „Automatic Temperature Control Assembly" in this section.
3. Remove the screws securing the in-car temperature sensor.

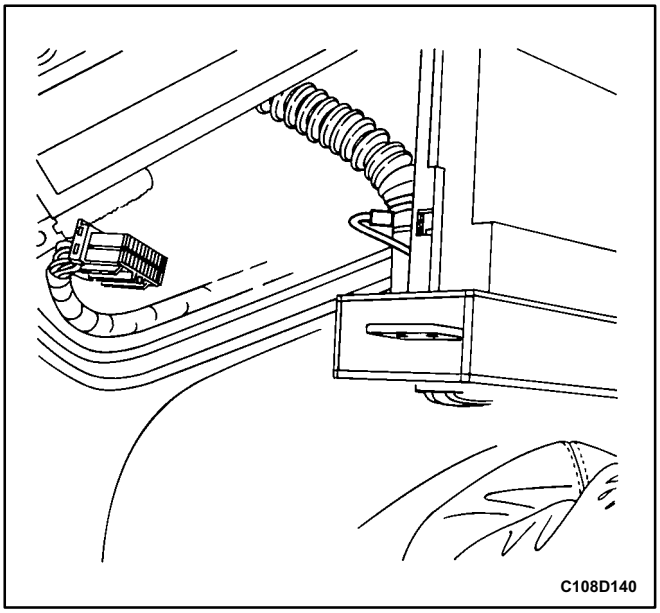

4. Disconnect the electrical connector and remove the air inlet tube.
5. Remove the in-car temperature sensor from the controller.

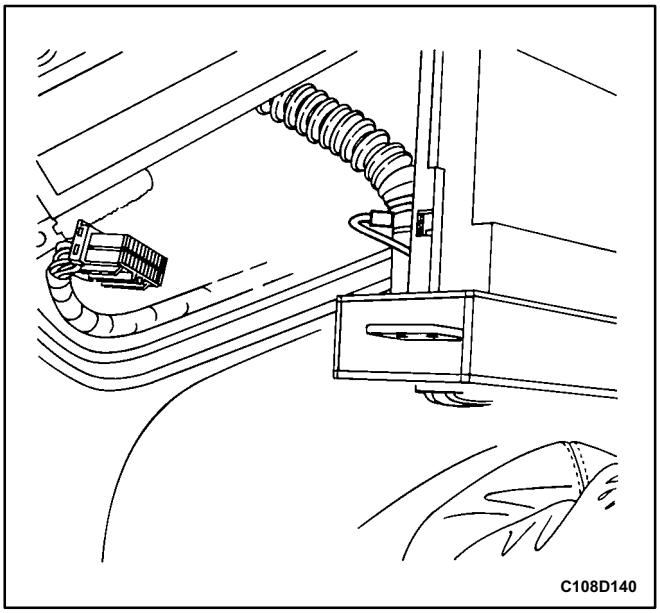

Installation Procedure

1. Install the in-car temperature sensor into the controller.

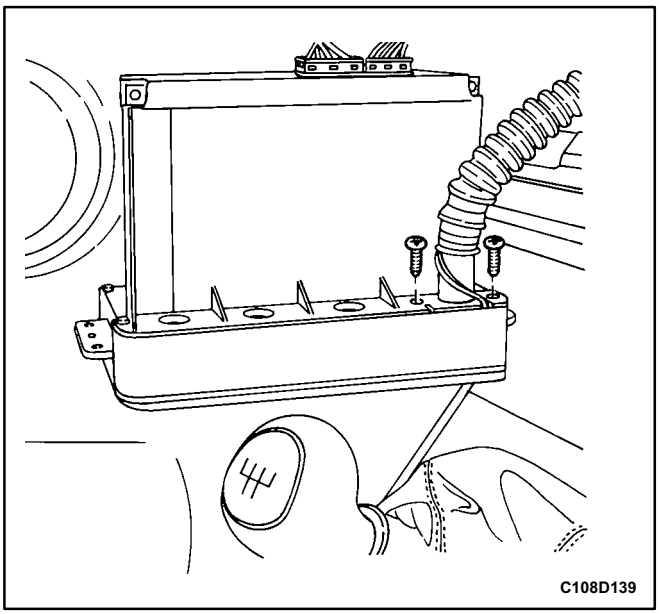

2. Install the in-car sensor retaining screws and tighten.
3. Install the air inlet tube and connect the electrical connector.
4. Install the automatic temperature control assembly. Refer to „Automatic Temperature Control Assembly" in this section.
5. Connect the battery negative cable.

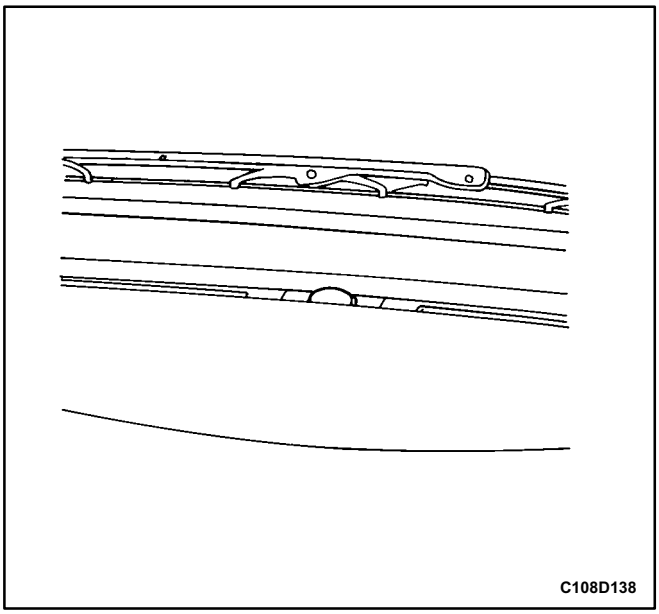

SUN SENSOR

Removal Procedure

1. Disconnect the negative battery cable.
2. Gently pry up on the sun sensor to remove it.

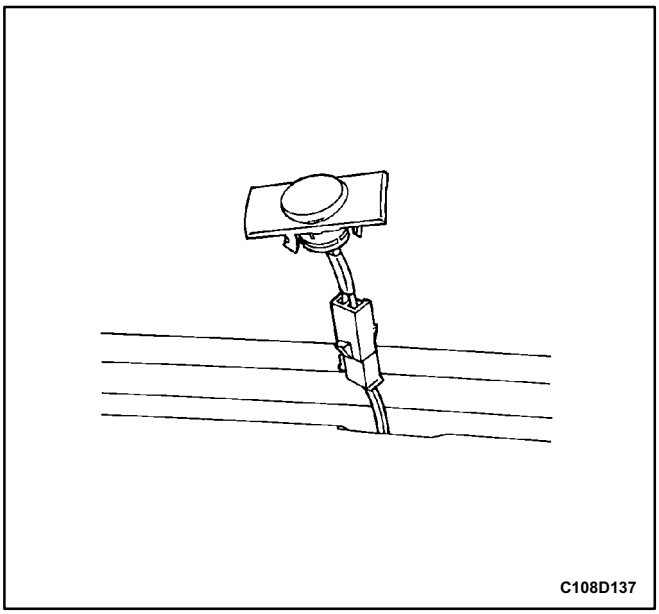

3. Secure the electrical connector to prevent it from falling beneath the dash.
4. Disconnect the electrical connector.

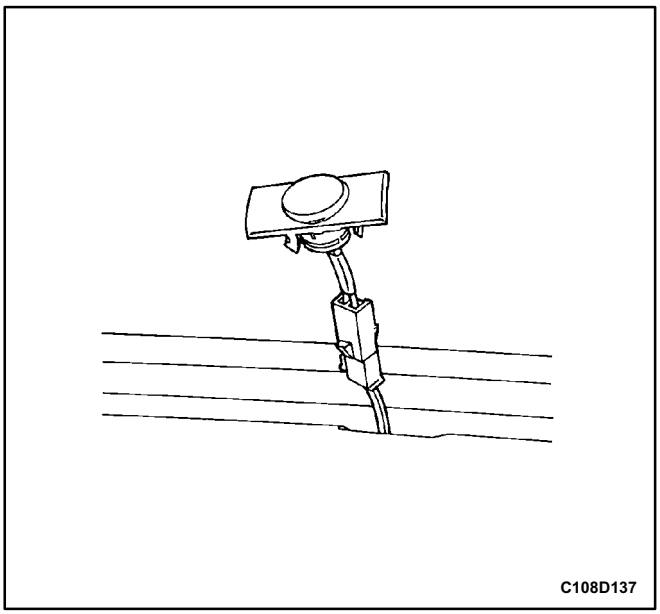

Installation Procedure

1. Connect the electrical connector.

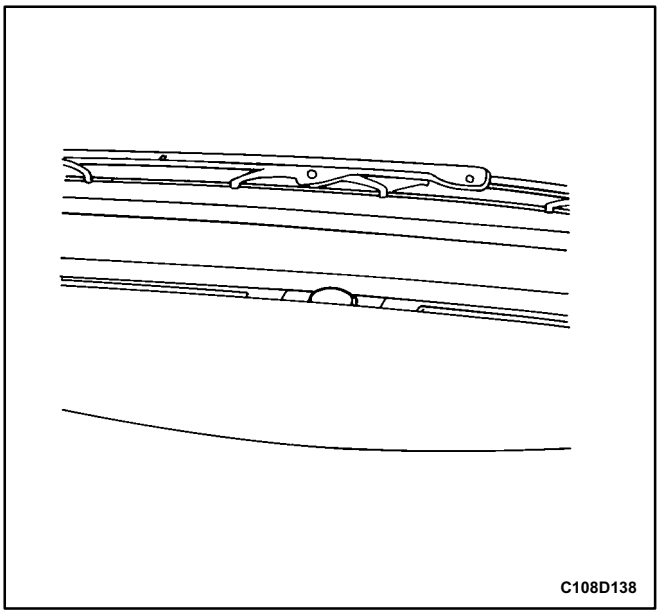

2. Insert and press the sun sensor into position in the dash.
3. Connect the negative battery cable.

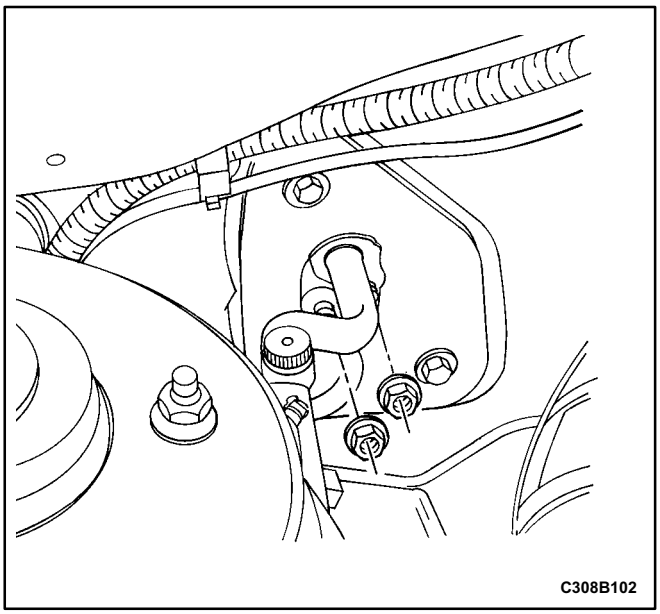

HEATER/AIR DISTRIBUTOR CASE ASSEMBLY

(Left-Hand Drive Shown, Right-Hand Drive Similar)

Removal Procedure

1. Disconnect the negative battery cable.
2. Remove the instrument panel carrier assembly. Refer to *Section 9E, Instrumentation/Driver Information.*
3. Drain the cooling system. Refer to *Section 1D, Engine Cooling*.
4. Recover the refrigerant. Refer to *Section 7B, Manual Control Heating, Ventilation, and Air Conditioning System*.
5. Remove the retaining nuts that secure the suction hose and the liquid evaporator pipe blocks at the fire wall.

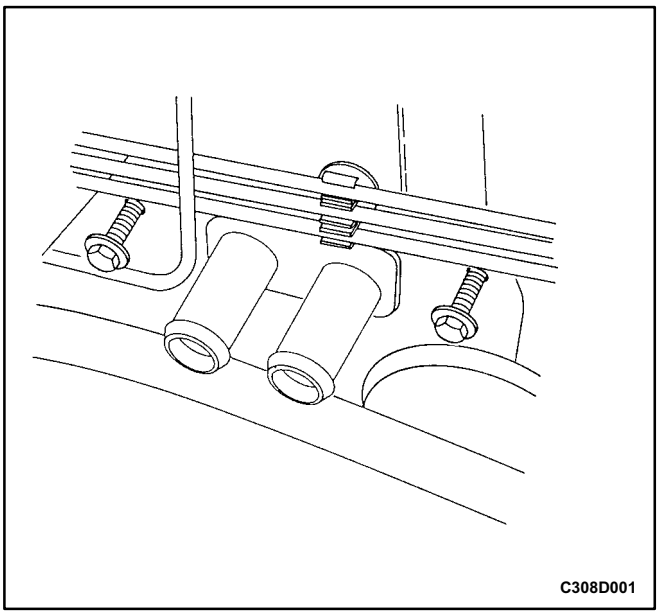

6. Loosen the clamp bolts from the suction hose and the liquid evaporator pipe to allow movement of the hose and the pipe.
7. Remove the evaporator drain hose.
8. Compress the heater hose clamps at the fire wall and slide the clamps toward the engine.
9. Remove the two heater hoses from the core lines at the fire wall.
10. Remove the screws that secure the heater/air distributor case assembly to the fire wall on either side of the heater hoses.

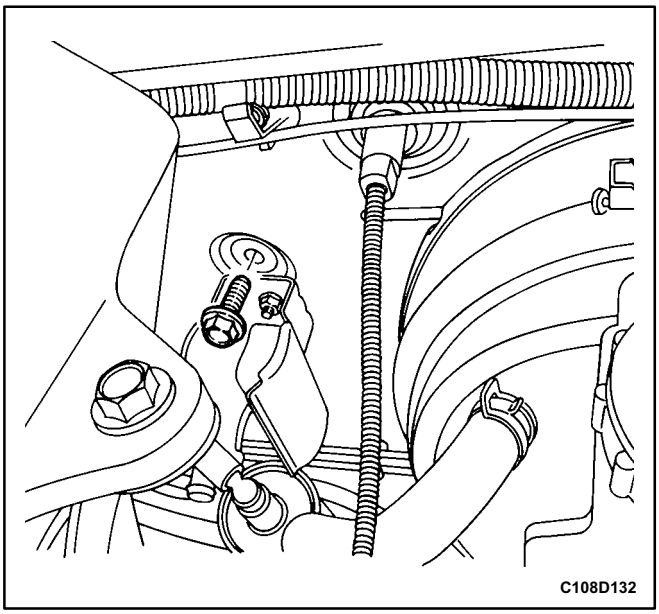

11. Remove the heater/air distributor case screw, that is located above the fuel filter, from the engine compartment side of the fire wall.
12. Have an assistant support the heater/air distributor case from inside the vehicle.

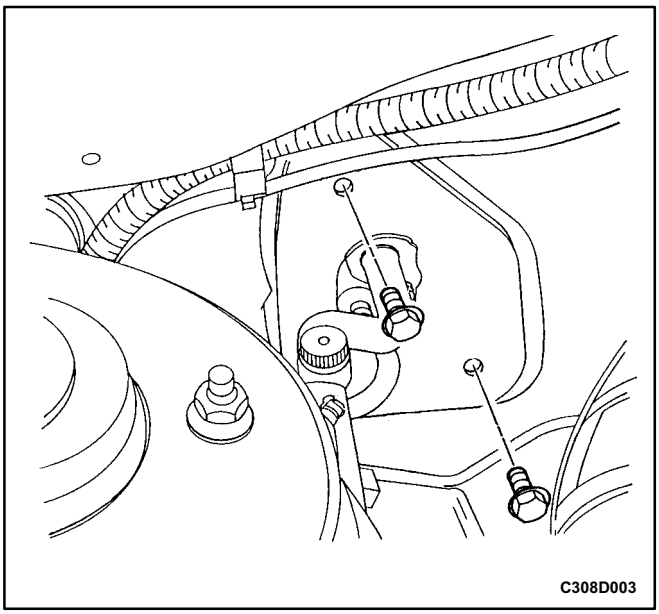

13. Remove the heater/air distributor case screws from the evaporator flange on the engine compartment side of the fire wall. The heater/air distributor case assembly will start to drop.
14. Pull the case straight away from the fire wall.
15. Remove the heater/air distributor case assembly from the vehicle.

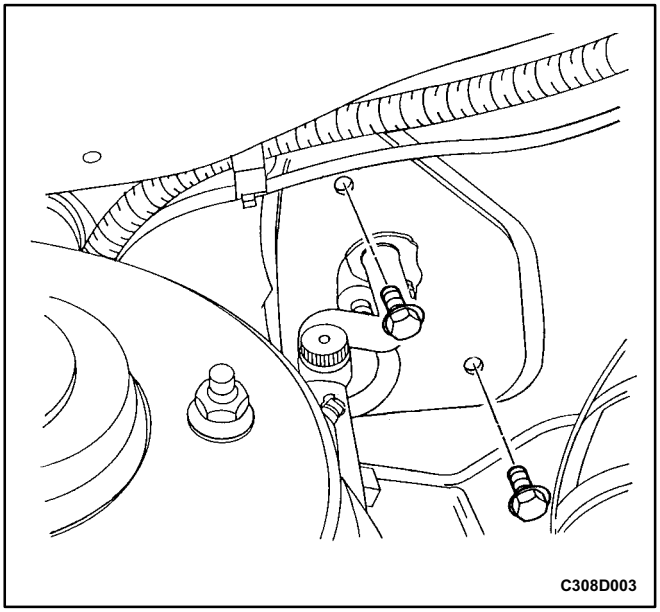

Installation Procedure

1. Position the heater/air distributor case assembly in the vehicle.

Notice: To avoid damaging the heater core tubes, make sure they do not contact the fire wall opening.

2. Slowly raise the heater/air distributor case assembly into position and hold it against the fire wall while the screws are installed and tightened from the engine side of the fire wall.
3. Align and install the heater/air distributor case assembly screws above the fuel filter and at the evaporator flange.

Tighten

Tighten the heater/air distributor case assembly screws to 8 N•m (71 lb•in).

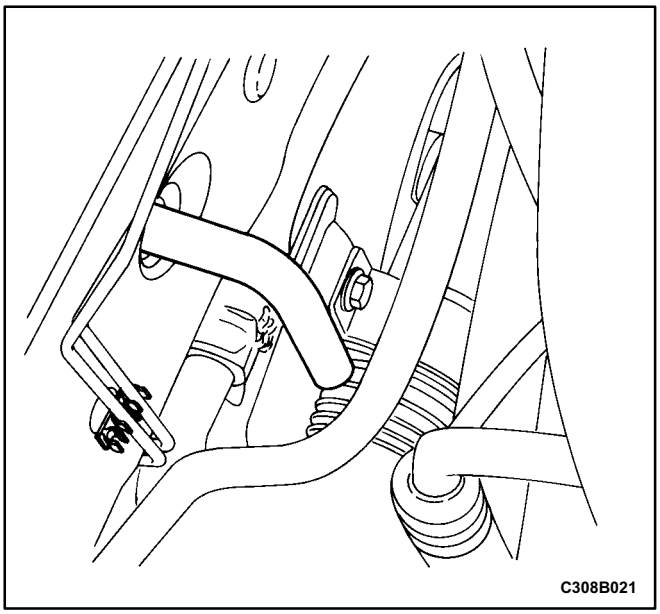

4. Install the heater/air distributor case assembly screws adjacent to the heater hoses.

Tighten

Tighten the heater/air distributor case assembly screws to 8 N•m (71 lb•in).

5. Install the evaporator drain hose.

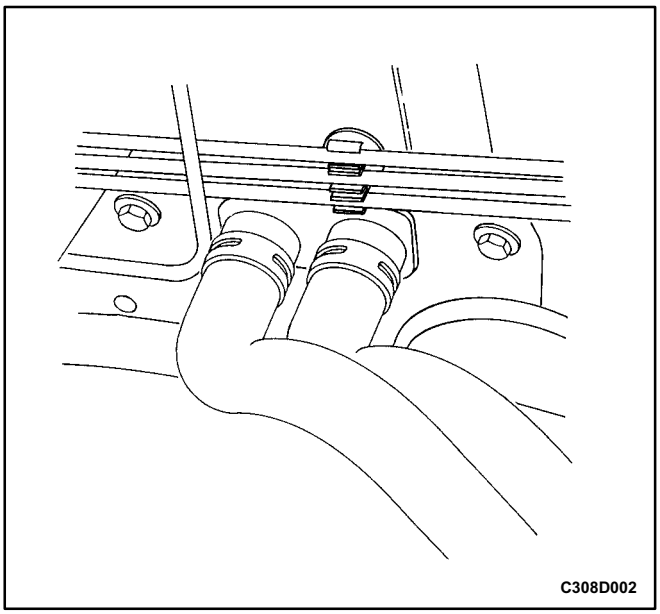

6. Install the two heater hoses.
7. Slide the heater hose clamps into position.
8. Install the instrument panel carrier assembly. Refer to *Section 9E, Instrumentation/Driver Information.*

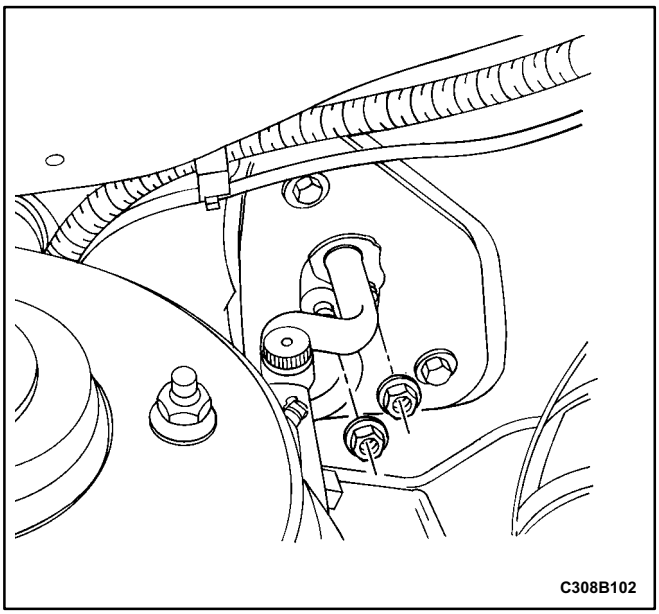

9. Install new O-rings on the suction hose and the liquid evaporator pipe at the fire wall and put the pipes back in place.
10. Install the retaining nuts that secure the suction hose and the liquid evaporator pipe blocks at the fire wall.

Tighten

Tighten the suction hose and the liquid evaporator pipe retaining nuts to 10 N•m (89 lb•in).

11. Fill the cooling system. Refer to *Section 1D, Engine Cooling*.
12. Recharge the A/C system. Refer to *Section 7B, Manual Control Heating, Ventilation, and Air Conditioning System*.
13. Connect the negative battery cable.

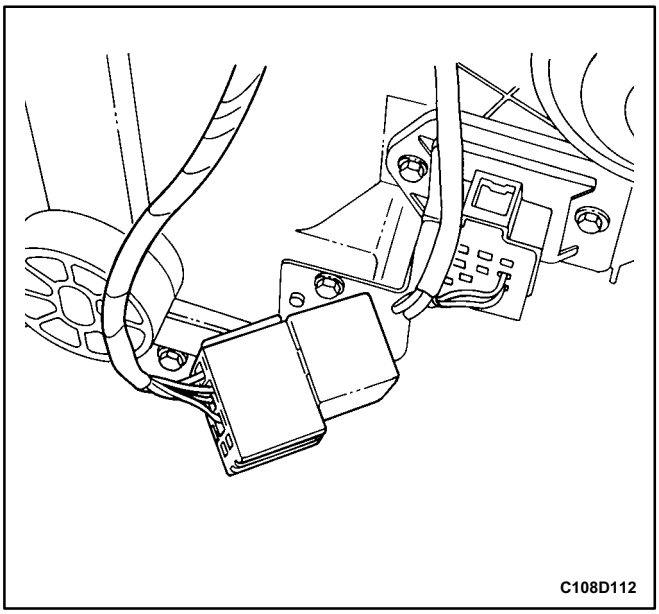

HIGH-BLOWER RELAY

Removal Procedure

1. Disconnect the negative battery cable.
2. The relay is located in front of the blower motor.
3. Slide the relay and the connector up and out of its retaining track.
4. Separate the relay from the connector.

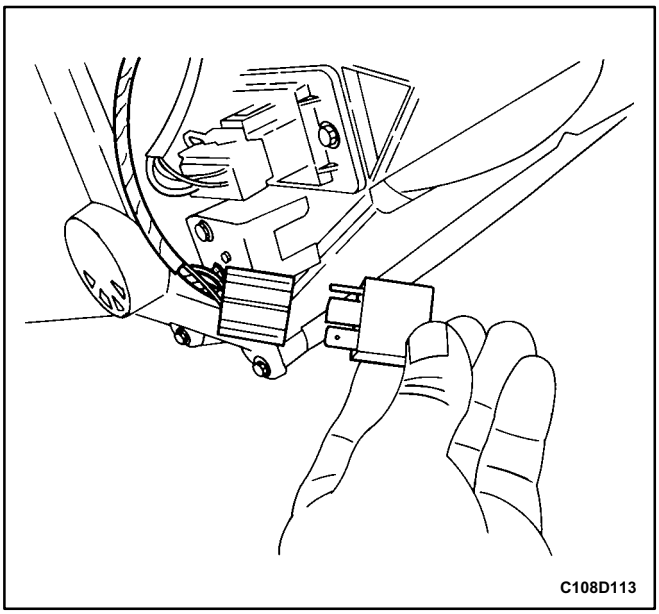

Installation Procedure

1. Align the high-blower relay contacts with the high-blower relay terminal slots.
2. Push the relay firmly into the base. The relay must be seated and flush with the edge of the base.
3. Connect the negative battery cable.

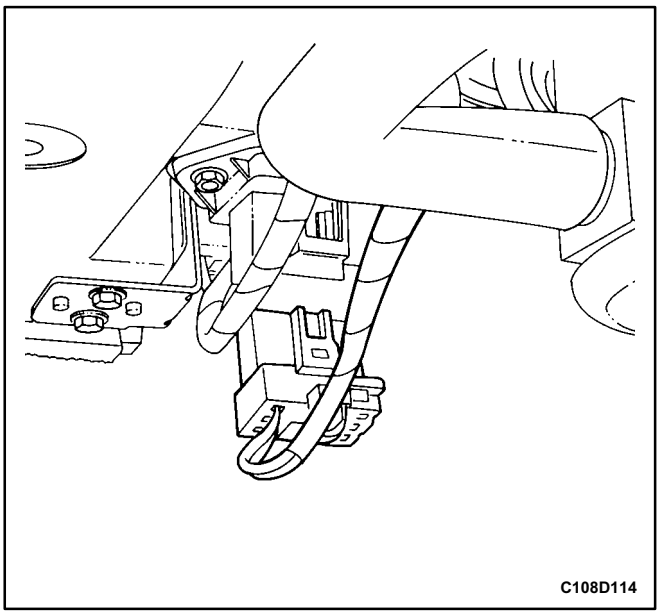

POWER TRANSISTOR

Removal Procedure

1. Disconnect the negative battery cable.
2. Remove the glove box. Refer to *Section 9E, Instrumentation/Driver Information*.
3. Remove the footwell upper cover. Refer to *Section 9E, Instrumentation/Driver Information*.
4. Disconnect the electrical connector at the resistor.
5. Remove the screws from the resistor.
6. Remove the resistor from the heater/air distributor case assembly by gently pulling the resistor downward.

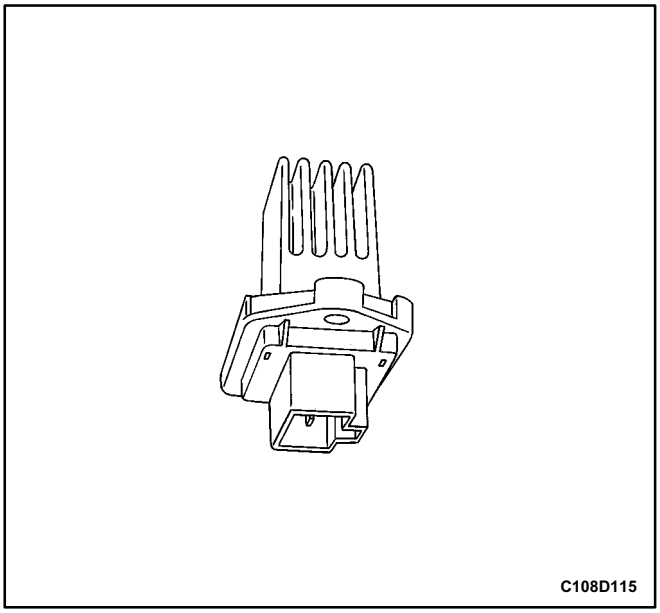

Installation Procedure

1. Install the new resistor into the heater/air distributor case assembly with the screws.

   Tighten

   Tighten the blower motor resistor screws to 6 N•m (53 lb•in).
2. Connect the electrical connector at the resistor.
3. Connect the negative battery cable.
4. Confirm the proper performance of the blower.
5. Replace the footwell upper cover. Refer to *Section 9E, Instrumentation/Driver Information*.
6. Replace the glove box. Refer to *Section 9E, Instrumentation/Driver Information*.

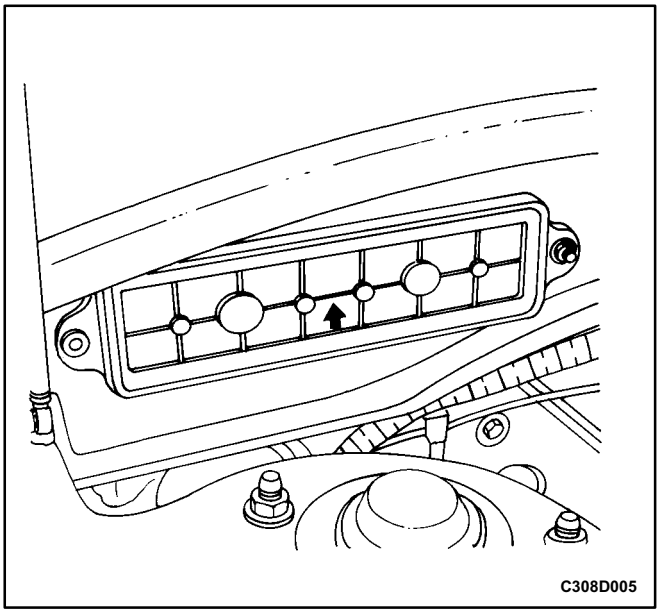

AIR FILTER

(Left-Hand Drive Shown, Right-Hand Drive Similar)

Removal Procedure

1. Remove the nut that secures the air filter cover to the fire wall.
2. Remove the cover.

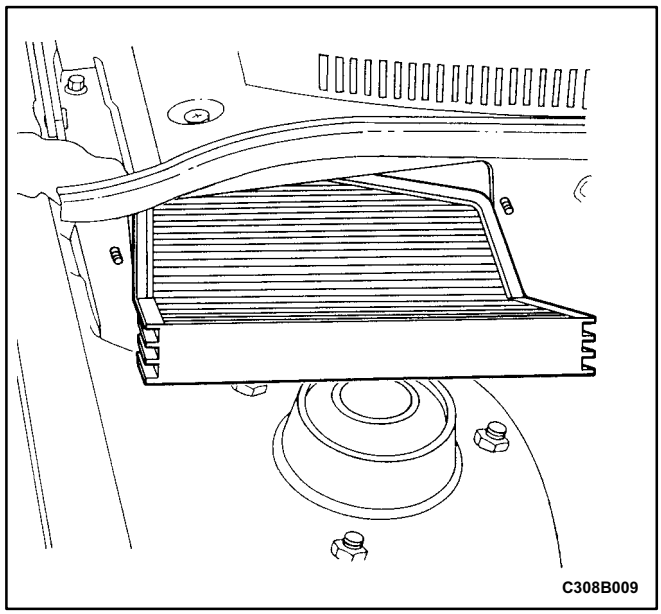

3. Pull the air filter out of the cavity in the fire wall.

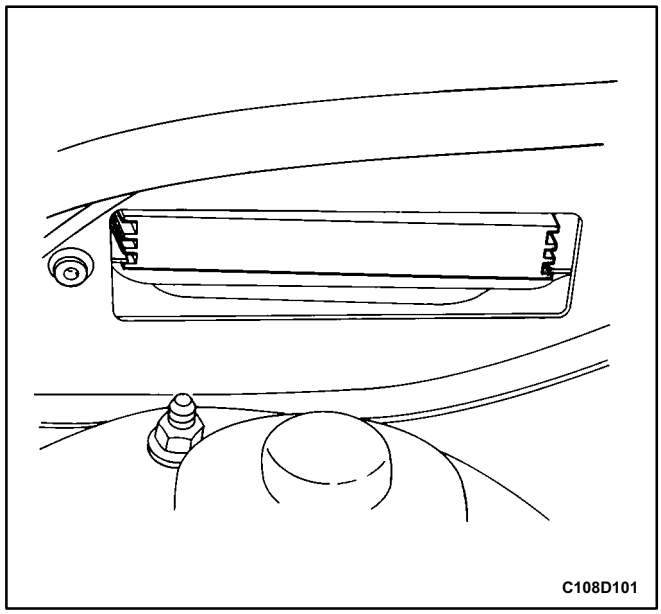

Installation Procedure

1. Install the air filter into its cavity in the fire wall.
   - Align the fins on the plastic frame of the filter with the grove in the holder before attempting to insert the filter into place.
2. Install the air filter cover with the arrow pointing up.
3. Install the nut to secure the air filter cover to the fire wall.

   Tighten

   Tighten the air filter cover nut to 4 N•m (35 lb•in).

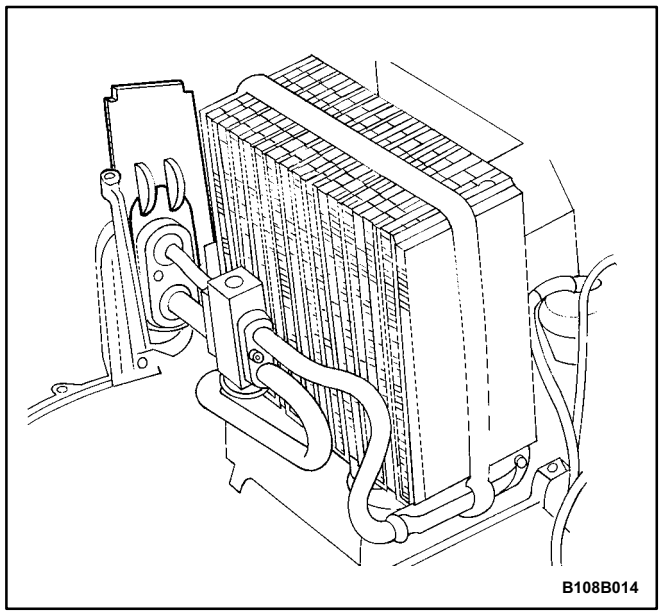

A/C EXPANSION VALVE

(Left-Hand Drive Shown, Right-Hand Drive Similar)

Removal Procedure

1. Remove the heater/air distributor case assembly. Refer to „Heater/Air Distributor Case Assembly” in this section.
2. Remove the screws securing the evaporator case halves.
3. Remove the evaporator core case cover.
4. Slide the evaporator flange support plate upward to facilitate evaporator removal.

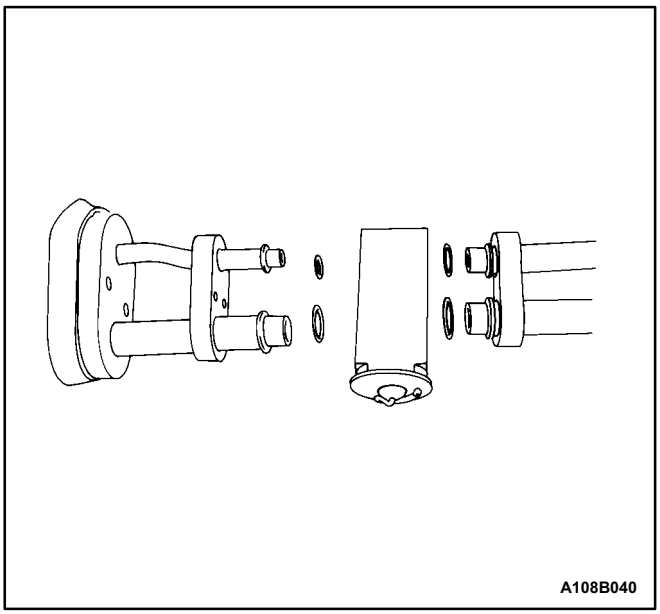

5. Remove the evaporator from the case.
6. Remove the expansion valve bolts.
7. Remove the expansion valve.
8. Remove the O-rings from the evaporator lines and the A/C lines.

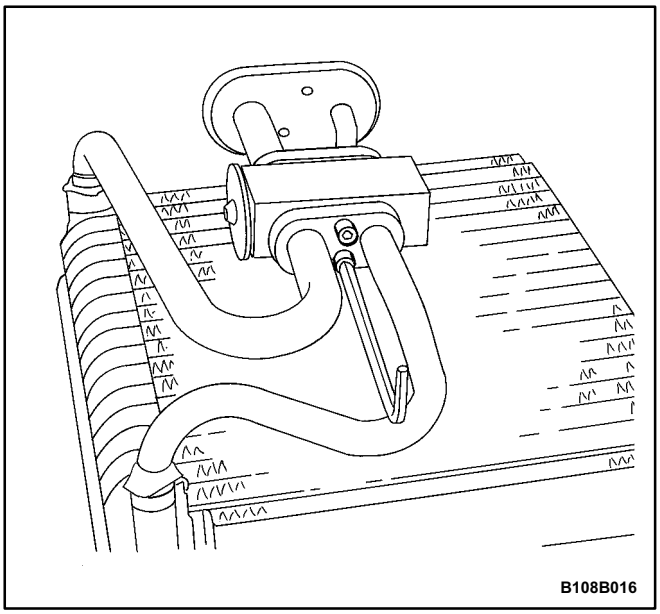

Installation Procedure

1. Clean the O-ring surface areas of dirt or contamination.
2. Install new O-rings on the evaporator lines and the A/C lines.
3. Install a new expansion valve onto the evaporator lines.
4. Insert the expansion valve bolts through the expansion valve into the mount surface of the evaporator flange.

Tighten

Tighten the expansion valve bolts to 10 N•m (89 lb•in).

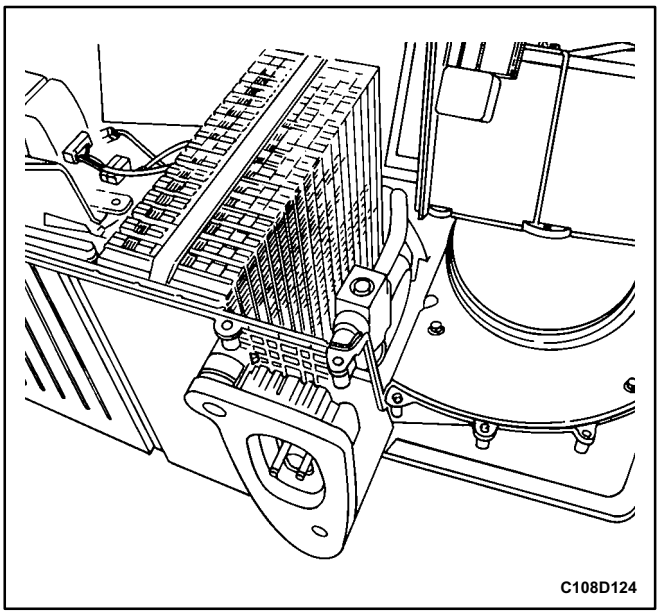

5. Install the evaporator core into the case. Center the evaporator flange in the case opening.
6. Install the evaporator core case cover with the screws.
7. Install the heater/air distributor case assembly. Refer to „Heater/Air Distributor Case Assembly” in this section.

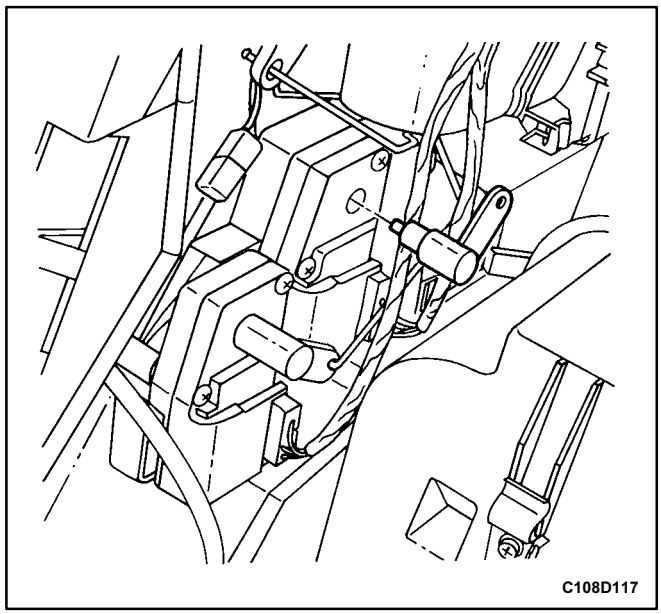

HEATER CORE

(Left-Hand Drive Shown, Right-Hand Drive Similar)

Removal Procedure

1. Remove the heater/air distributor case assembly from the vehicle. Refer to „Heater/Air Distributor Case Assembly" in this section.
2. Remove the motor lever and actuator rod.

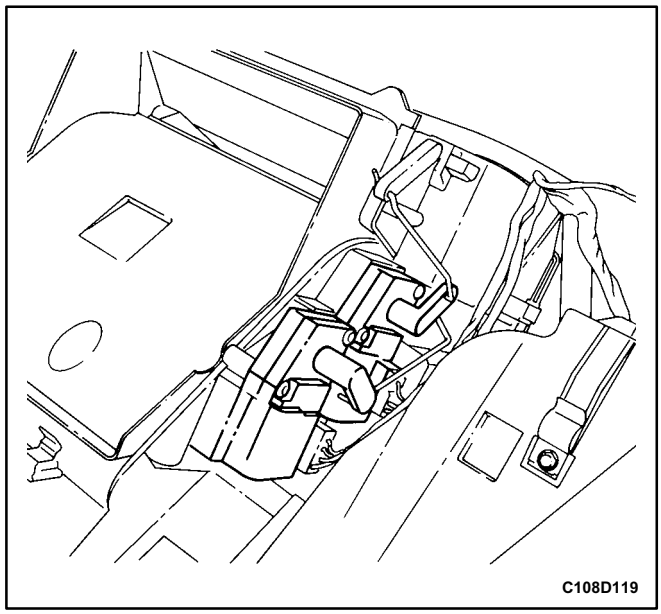

3. Remove the motor screws and the motor to access a buried heater core cover bolt.
4. Remove the foam insulation from the tube base.
5. Remove the remaining actuator rod from the motor lever.
6. Remove the retaining screws that secure the heater core cover to the heater/air distributor case assembly.
7. Slowly separate the lower heater core cover from the rest of the assembly.

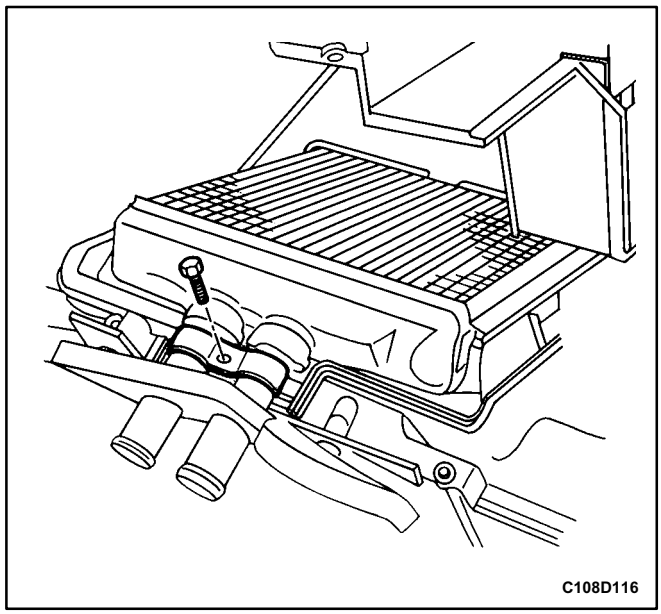

8. Remove the screw and the bracket clamp that secure the heater core lines to the case.
9. Remove the spring clamp that secures the heater core body to the case.
10. Remove the heater core from the case.

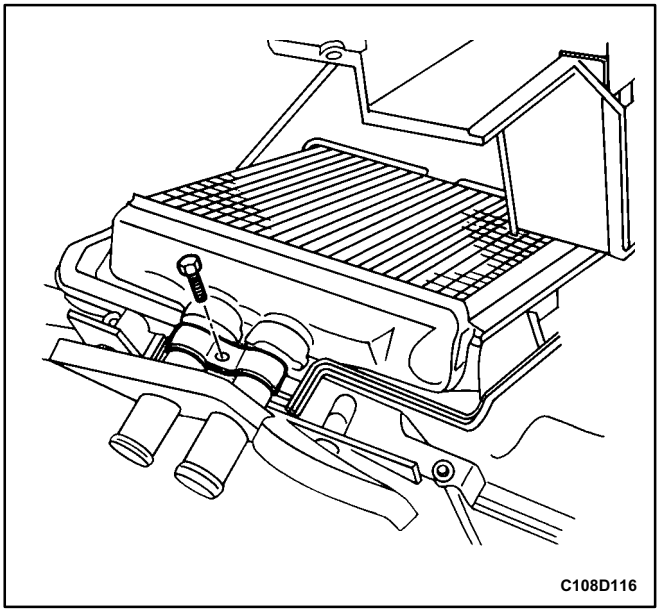

Installation Procedure

1. Install the heater core into the case.
2. Secure the heater core lines to the case with the retaining bracket clamp and the screw.

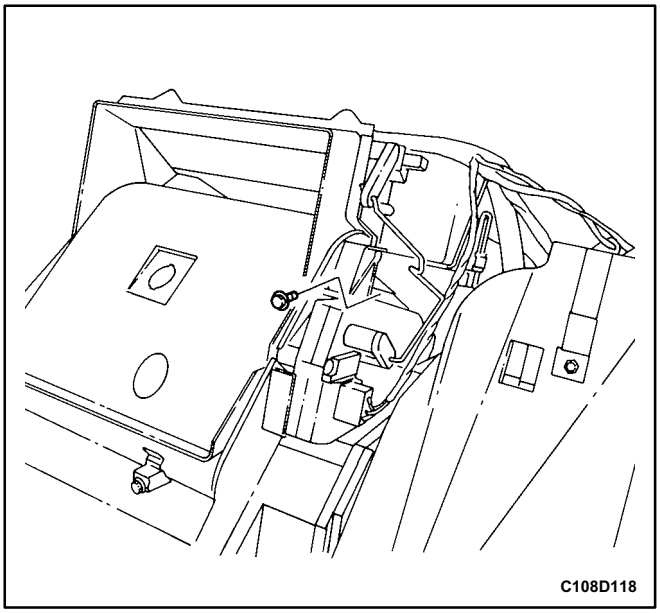

3. Install the heater core cover.
4. Install and tighten the screws that secure the heater core cover to the heater/air distributor case assembly.

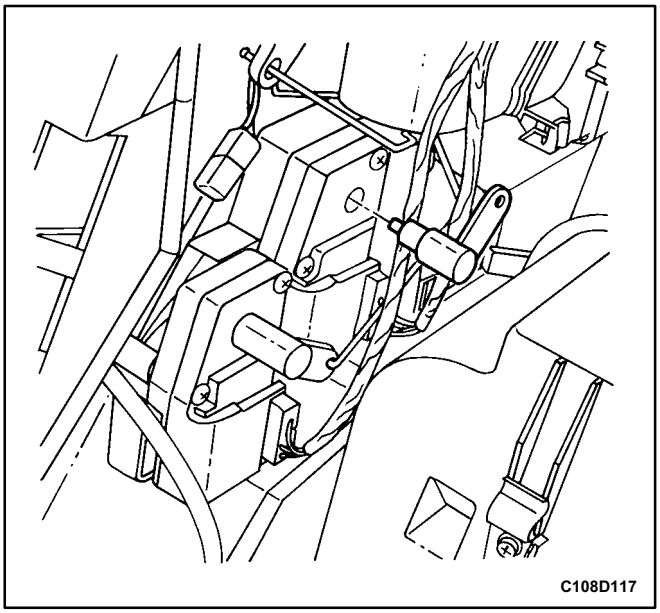

5. Install the motor and screws for the floor diverter.
6. Install the heater/air distributor case. Refer to „Heater/Air Distributor Case Assembly” in this section.

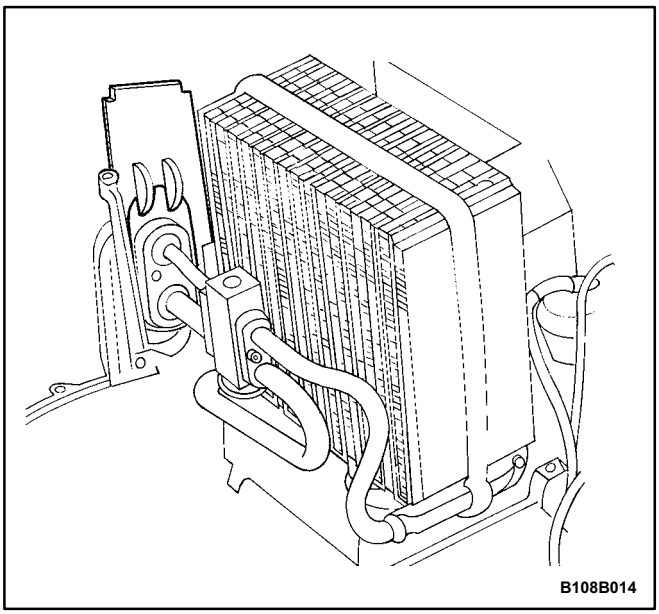

EVAPORATOR CORE

(Left-Hand Drive Shown, Right-Hand Drive Similar)

Removal Procedure

1. Remove the heater/air distribution case assembly. Refer to „Heater/Air Distribution Case Assembly" in this section.
2. Remove the screws that secure the evaporator case halves.
3. Remove the evaporator core case cover.
4. Slide the evaporator flange support plate upward to facilitate removal of the evaporator.

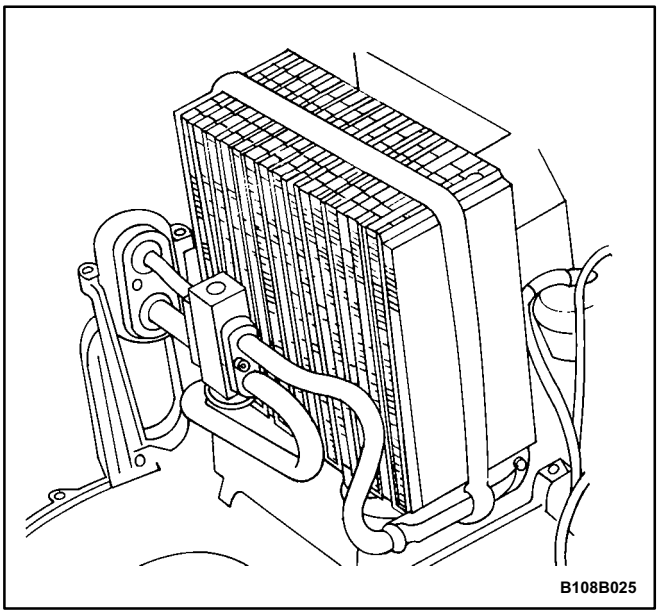

5. Remove the evaporator core from the case.
6. Remove the air conditioning expansion valve. Refer to „A/C Expansion Valve" in this section.

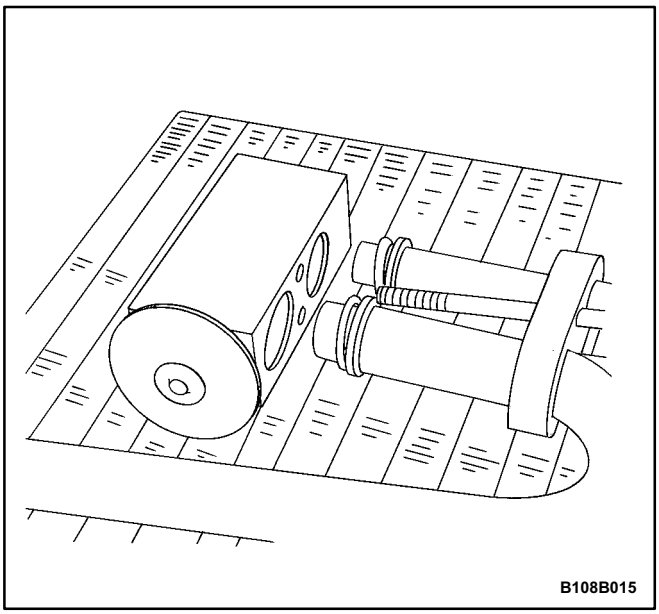

Installation Procedure

1. Install the Orings onto the evaporator tubes.
2. Install the A/C expansion valve. Refer to „A/C Expansion Valve" in this section.

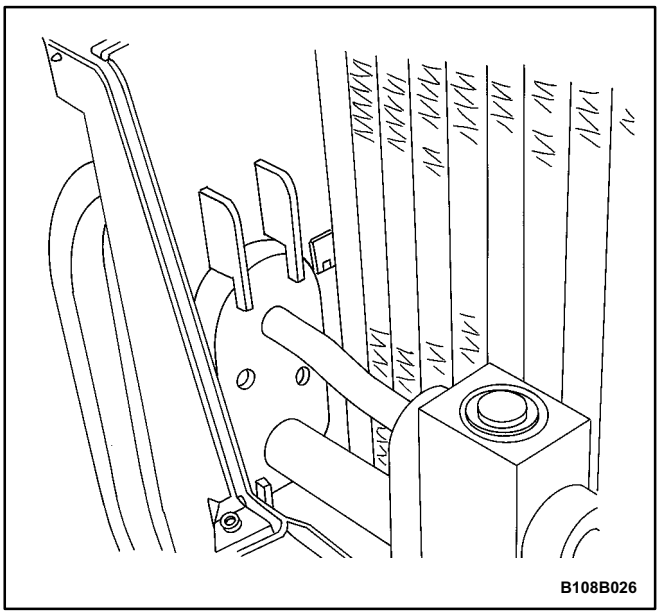

3. Install the evaporator core into the case. Center the evaporator flange in the case opening.
4. Assemble the evaporator case halves with the screws.
5. Install the heater/air distributor case assembly. Refer to „Heater/Air Distributor Case Assembly” in this section.

UNIT REPAIR

V5 AIR CONDITIONING COMPRESSOR OVERHAUL

COMPRESSOR OVERHAUL

Refer to *Section 7B, Manual Control Heating, Ventilation, and Air Conditioning System* for details of the following procedures:

- Clutch Coil.
- Clutch Plate and Hub Assembly.
- Clutch Rotor and Bearing.
- Component Locator V5 Compressor.
- Control Valve Assembly.
- Cylinder to Front Head O-Ring.
- Leak Testing (External).
- Pressure Relief Valve.
- Rear Head, Gasket, Valve Plate, Reed Plate, and ORing.
- Shaft Seal Replacement.

GENERAL DESCRIPTION AND SYSTEM OPERATION

GENERAL INFORMATION

THE V5 SYSTEM

Refer to *Section 7B, Manual Control Heating, Ventilation, and Air Conditioning System* for general information details for the following:

- System Components - Functional.
- The V5 A/C System.
- V5 Compressor - Description of Operation.
- V5 Compressor - General Description.

SYSTEM COMPONENTS - CONTROL

Controller

The operation of the A/C system is controlled by the switches on the control head. This consolemounted heating and ventilation system contains the following knobs and display:

The Temperature Control Push Knobs

1. Raise the temperature of the air entering the vehicle by pressing the top switch, with the red arrow pointing upward.
2. Lower the temperature by pressing the bottom switch, with the blue arrow pointing downward.
3. Actuate the air mix door by an electric motor.
4. Vary the mix of the air passing through the heater core with the air bypassing the core.

Each press of a switch changes the set temperature by increments of 0.5° C (1°F). This is shown in the temperature window on the function display.

The Function Display

This is an LCD display indicating the status of the control settings selected. Starting from the left end of the display, the sections are as follows:

1. Temperature setting - Indicates the temperature set with the temperature control knob.
2. Auto status - Indicates whether the system is operating in the full auto mode or the manual mode.
3. Defroster icon - Indicates manual selection of full defrost mode.
4. Mode - Indicated by icon, the mode chosen by the system in auto (or by the operator in manual) is shown by an illumination arrow indicating the air path.
5. A/C - A snowflake icon indicating whether the A/C is ON or OFF.
6. Fan speed - Indicates the fan speed by illuminating a bar based on the segment at the front, for low speed, and adding additional segments in order up to the fifth, for high speed.

Eight Additional Push Knobs

1. Full defrost - Causes the mode motors to direct all air to the windshield and aide window outlets for maximum defrosting.
2. Air intake - Switches between fresh air intake, the default, and recirculating air. Airflow arrows on the display indicate the mode in effect.
3. Full Auto Switch - Maintains the set temperature automatically. In this mode, the fully automatic temperature control (FATC) system controls the following:
   - The air mix door motor.
   - The mode door motor.
   - The blower motor speed.
   - The inlet air door motor.
   - A/C ON/OFF.
4. OFF Switch - Turns the automatic air conditioning and fan control off.
5. Mode Switch - Allows manual selection of the airflow direction.
   - Selection is shown on the function display.
   - Each time the mode switch is pressed, the next function is displayed.
6. A/C Switch - Allows manual selection and control of the air conditioning function.
7. Fan Control Switch - Allows manual selection among five fan speeds.
8. Defogger Switch - Turns on the electric defogging heater in the rear window and the outside rearview mirrors, if the vehicle is equipped with heated mirrors.

Pressure Transducer

Pressure transducer switching incorporates the functions of the high-pressure and the low-pressure cutout switches along with the fan cycling switch. The pressure transducer is located in the high-side liquid refrigerant line behind the right strut tower, between the right strut tower and the fire wall. The output from this pressure transducer goes to the electronic control module (ECM), which controls the compressor function based on the pressure signal.

Wide-Open Throttle (WOT) Compressor Cutoff

During fullthrottle acceleration, the throttle position sensor (TPS) sends a signal to the ECM, which then controls the compressor clutch.

High RPM Cutoff

As engine rpm approaches the maximum limit, the ECM will disengage the compressor clutch until the engine slows to a lower rpm.

RESTRAINTS

CONTENTS

SECTION 8A SEAT BELTS

SECTION 8B SUPPLEMENTAL INFLATABLE RESTRAINTS (SIR)

SECTION 8A

SEAT BELTS

CAUTION: Disconnect the negative battery cable before removing or installing any electrical unit or when a tool or equipment could easily come in contact with exposed electrical terminals. Disconnecting this cable will help prevent personal injury and damage to the vehicle. The ignition must also be in LOCK unless otherwise noted.

TABLE OF CONTENTS

Specifications 8A-1
Fastener Tightening Specifications 8A-1
Schematic and Routing Diagrams 8A-2
Driver Seat Belt Warning 8A-2
Diagnosis 8A-3
Driver Seat Belt Warning 8A-3
Maintenance and Repair 8A-6
On-Vehicle Service 8A-6
Three-Point ELR Front Seat Belt 8A-6
Front Seat Belt Height Adjuster 8A-8
Three-Point ELR Rear Outboard Seat Belt 8A-8
Two-Point Lap Rear Center Seat Belt 8A-10
General Description and System Operation 8A-12
Seat Belt Reminder 8A-12
ELR Front Seat Belt 8A-12
ELR Rear Outboard Seat Belt 8A-12
Lap Rear Center Seat Belt 8A-12
Seat Tether Anchor 8A-12
Operational Checks 8A-12

SPECIFICATIONS

FASTENER TIGHTENING SPECIFICATIONS

Application	N•m	Lb•Ft	Lb•In
Front Seat Belt Height Adjuster Bolts	19	14	-
Seat Belt Anchor Bolt	35	26	-
Seat Belt Bracket Screws	3	-	27
Seat Belt Retractor Screw	10	-	89

SCHEMATIC AND ROUTING DIAGRAMS

DRIVER SEAT BELT WARNING

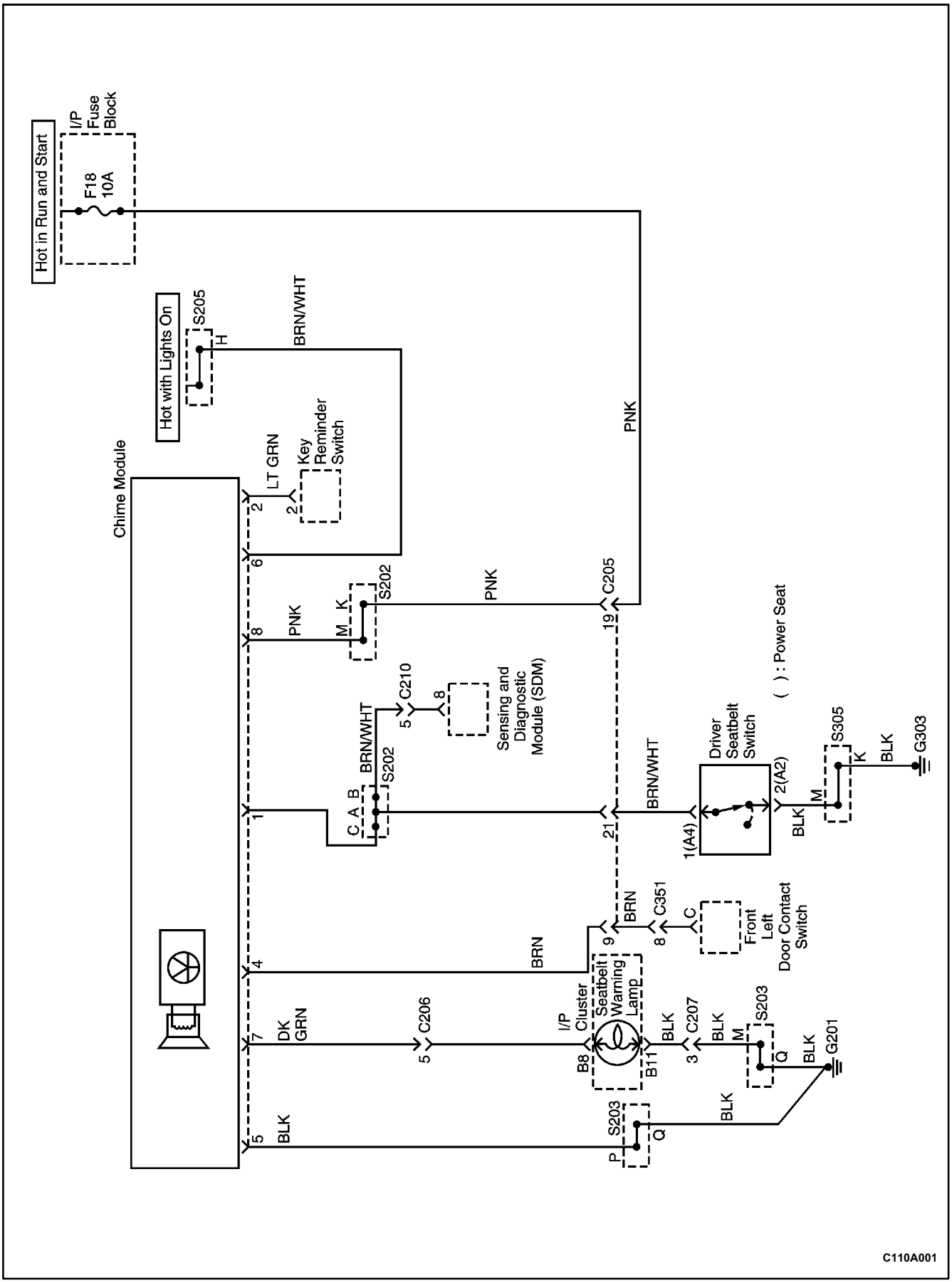

DIAGNOSIS

DRIVER SEAT BELT WARNING

Seat Belt Warning Lamp Does Not Turn On at Any Time

Step	Action	Value(s)	Yes	No
1	1. Unbuckle the seat belt. 2. Close the doors of the vehicle. 3. Turn the ignition ON. Is the seat belt warning chime OK?	-	Go to *Step 13*	Go to *Step 2*
2	Check the seat belt warning fuse F18. Is fuse F18 blown?	-	Go to *Step 3*	Go to *Step 4*
3	1. Check for a short circuit and repair if necessary. 2. Replace the fuse. Is the repair complete?	-	System OK	-
4	1. Turn the ignition ON. 2. Check the voltage at fuse F18. Is the voltage equal to the specified value?	11-14 V	Go to *Step 6*	Go to *Step 5*
5	Repair the open power supply circuit for fuse F18. Is the repair complete?	-	System OK	-
6	1. Disconnect the seat belt switch connector (located under the driver's seat). 2. Connect a jumper between the terminals on the harness side of the seat belt switch connector. 3. Turn the ignition ON. Does the seat belt warning lamp turn on?	-	Go to *Step 7*	Go to *Step 8*
7	Replace the seat belt switch. Is the repair complete?	-	System OK	-
8	1. Disconnect the chime module electrical connector. 2. Turn the ignition ON. 3. Check the voltage at the chime module connector, terminal 8. Is the voltage equal to the specified value?	11-14 V	Go to *Step 10*	Go to *Step 9*
9	Repair the open circuit between fuse F18 and the chime module. Is the repair complete?	-	System OK	-
10	1. The chime module connector is disconnected. 2. Turn the ignition OFF. 3. Use an ohmmeter to measure resistance between ground and terminal 5 of the chime module. Is the resistance equal to the specified value?	≈ 0 Ω	Go to *Step 12*	Go to *Step 11*
11	Repair the ground circuit for the chime module. Is the repair complete?	-	System OK	-
12	1. The chime module connector is disconnected. 2. Turn the ignition OFF. 3. Make sure the driver's seat belt is unbuckled. 4. Use an ohmmeter to measure resistance between ground and terminal 1 of the chime module. Is the resistance equal to the specified value?	≈ 0 Ω	Go to *Step 14*	Go to *Step 13*

Seat Belt Warning Lamp Does Not Turn On at Any Time (Cont'd)

Step	Action	Value(s)	Yes	No
13	Repair the open circuit between ground and terminal 1 of the chime module connector. Is the repair complete?	-	System OK	-
14	1. Remove the instrument cluster. 2. Check the seat belt warning lamp bulb. Is the bulb OK?	-	Go to *Step 16*	Go to *Step 15*
15	Replace the warning lamp bulb. Is the repair complete?	-	System OK	-
16	1. If the seat belt switch and the chime module were disconnected in a previous step, make sure that they have been reconnected. 2. Leave the seat belt unbuckled. 3. Turn the ignition ON. 4. Check the voltage at terminal B6 of the instrument cluster. Is the voltage equal to the specified value?	11-14 V	Go to *Step 20*	Go to *Step 17*
17	1. Disconnect the chime module connector. 2. Use an ohmmeter to check for continuity between the chime module connector terminal 7 and the instrument cluster connector B6. Did the ohmmeter indicate the specified value?	≈ 0 Ω	Go to *Step 19*	Go to *Step 18*
18	Repair the open circuit between the chime module terminal 7 and the instrument cluster terminal B6.	-	System OK	-
19	Replace the chime module. Is the repair complete?	-	System OK	-
20	Repair the open circuit between instrument cluster terminal B11 and ground. Is the repair complete?	-	System OK	-

Seat Belt Warning Chime Does Not Work

Step	Action	Value(s)	Yes	No
1	1. Leave the seat belt unbuckled. 2. Close the doors of the vehicle. 3. Turn the ignition ON. Is the seat belt warning lamp ON?	-	Go to *Step 2*	Go to "Seat Belt Warning Lamp Does Not Turn On at Any Time"
2	1. Buckle the seat belt. 2. Open the driver's door and turn the headlamps on. 3. Turn the ignition ON. Does the chime work as a door-open or headlamps-on warning?	-	Go to *Step 3*	Go to *Step 4*
3	Replace the warning chime bell module. Is the repair complete?	-	System OK	-
4	1. Disconnect the chime module electrical connector. 2. Use an ohmmeter to measure the resistance between ground and terminal 5 of the chime module connector. Is the resistance equal to the specified value?	≈ 0 Ω	Go to *Step 3*	Go to *Step 5*
5	Repair the open circuit between ground and terminal 5 of the chime module connector. Is the repair complete?	-	System OK	-

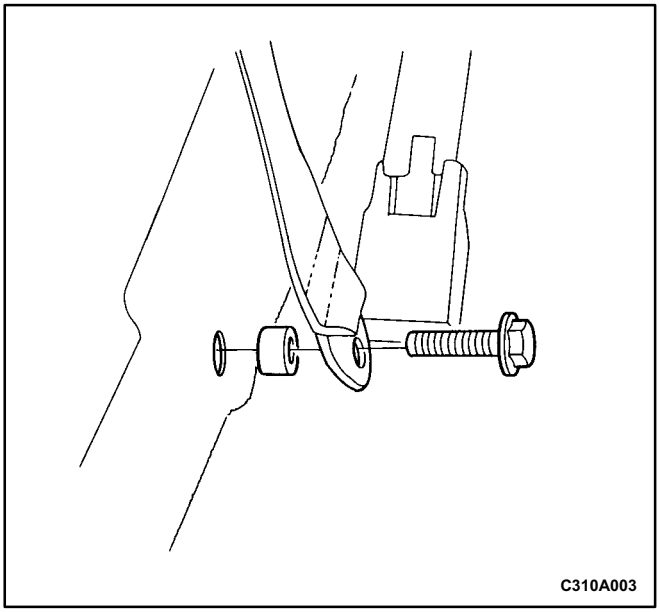

MAINTENANCE AND REPAIR

ON-VEHICLE SERVICE

THREE-POINT ELR FRONT SEAT BELT

Removal Procedure

1. Reposition the plastic cap to reveal the lower B-pillar seat belt anchor.
2. Remove the bolt and the lower B-pillar seat belt anchor.

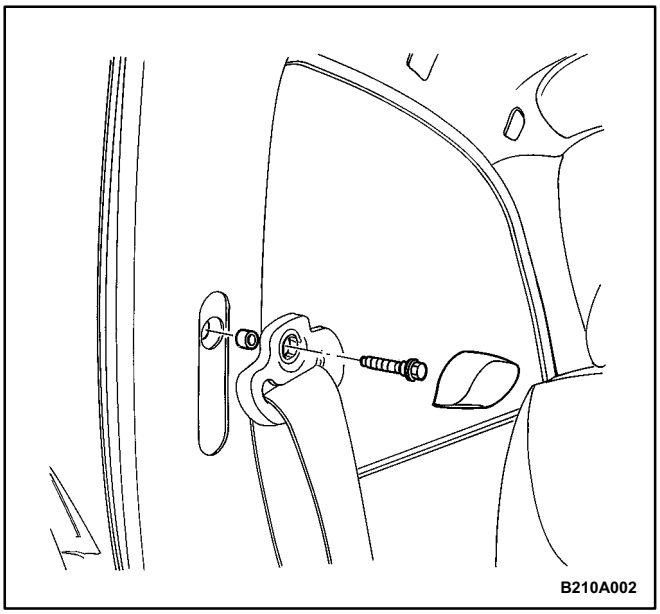

3. Remove the lower B-pillar trim panel. Refer to *Section 9G, Interior Trim*.
4. Reposition the plastic cap to reveal the upper B-pillar seat belt anchor.
5. Remove the bolt and the upper B-pillar seat belt anchor.

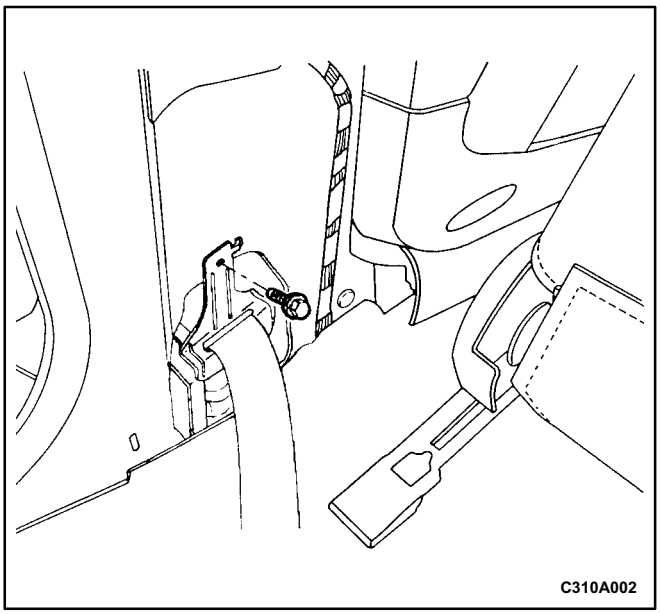

6. Remove the screws and the seat belt bracket.
7. Disconnect the electrical connector.
8. Remove the screw and the seat belt retractor.

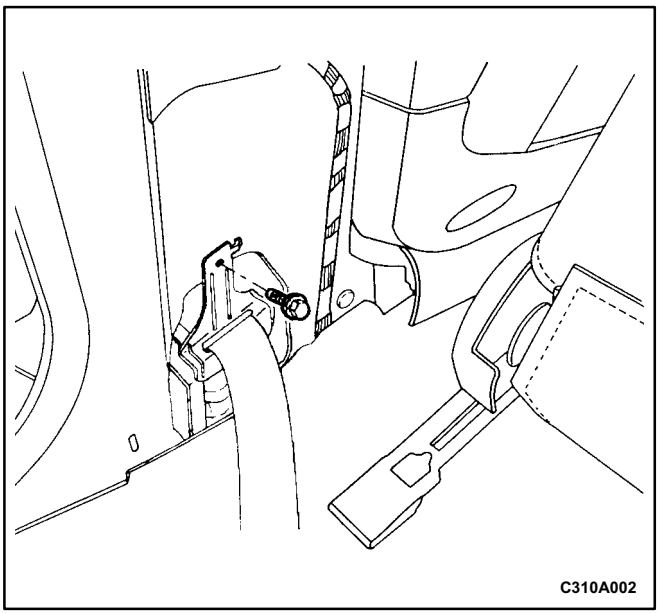

Installation Procedure

Notice: Dissimilar metals in direct contact with each other may corrode rapidly. Make sure to use the correct fasteners to prevent premature corrosion.

1. Install the seat belt retractor with the screw.

   Tighten

   Tighten the seat belt retractor screw to 10 N•m (89 lb•in).

2. Connect the electrical connector.
3. Install the seat belt bracket with the screws.

   Tighten

   Tighten the seat belt bracket screws to 3 N•m (27 lb•in).

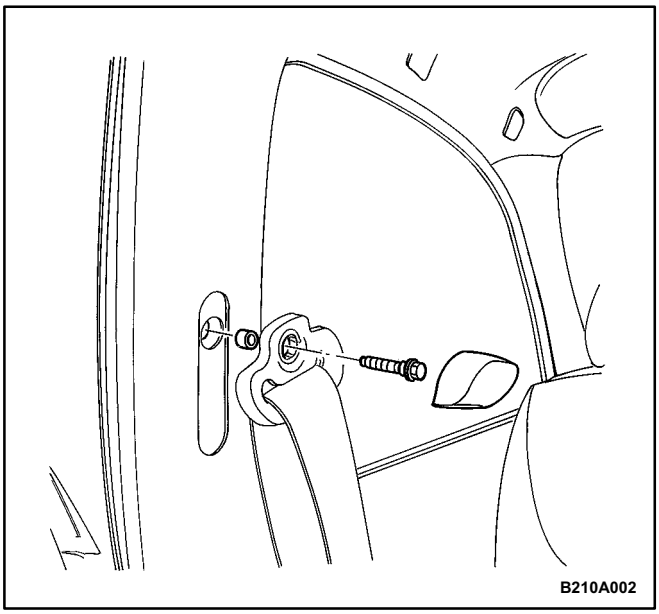

4. Install the upper B-pillar seat belt anchor with the bolt.

   Tighten

   Tighten the seat belt anchor bolt to 35 N•m (26 lb•ft).

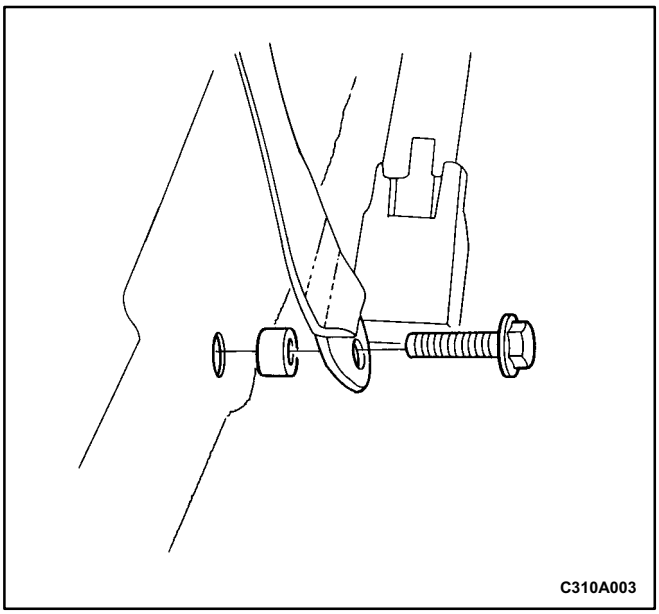

5. Install the seat belt anchor plastic cap to its original position.
6. Install the lower B-pillar trim panel. Refer to *Section 9G, Interior Trim*.
7. Install the lower B-pillar seat belt anchor.

   Tighten

   Tighten the seat belt anchor bolts to 35 N•m (26 lb•ft).

8. Install the seat belt anchor plastic cap to its original position.

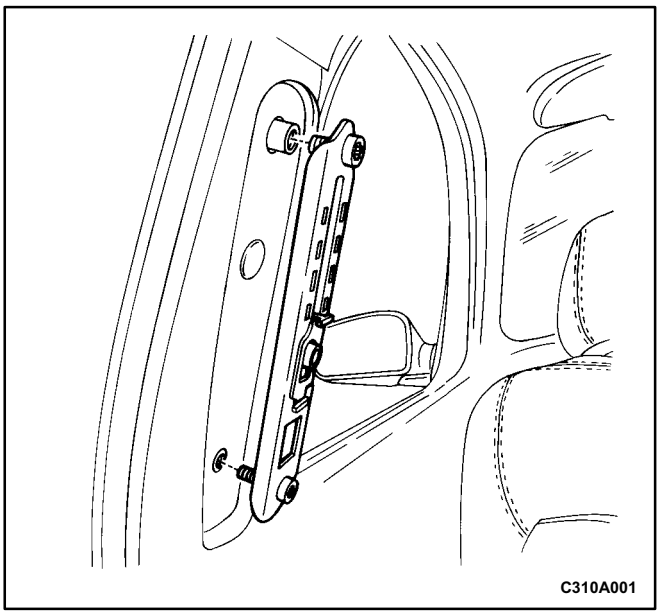

FRONT SEAT BELT HEIGHT ADJUSTER

Removal Procedure

1. Remove the upper B-pillar trim panel. Refer to *Section 9G, Interior Trim*.
2. Remove the bolts and the seat belt height adjuster.

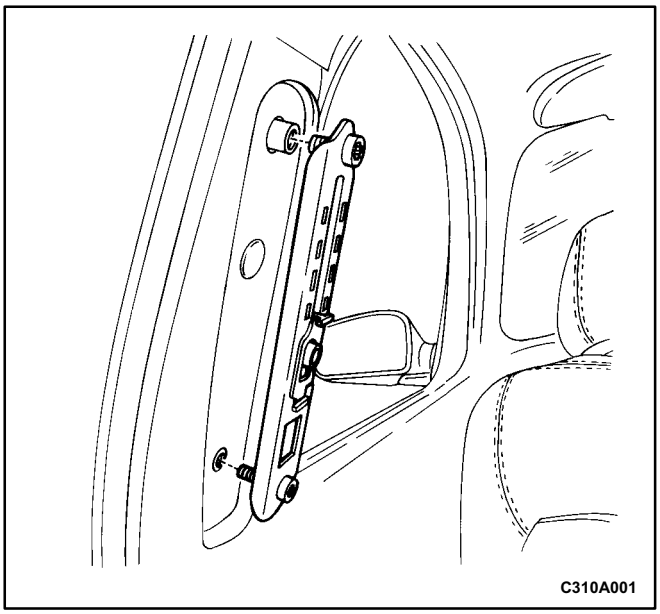

Installation Procedure

Notice: Dissimilar metals in direct contact with each other may corrode rapidly. Make sure to use the correct fasteners to prevent premature corrosion.

1. Install the seat belt height adjuster with the bolts.

   Tighten

   Tighten the front seat belt height adjuster bolts to 19 N•m (14 lb•ft).
2. Install the upper B-pillar trim panel. Refer to Section 9G, Interior Trim.

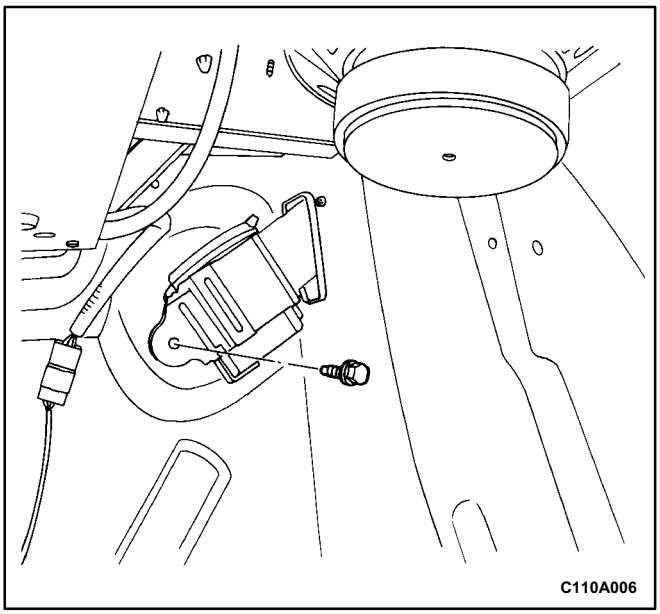

THREE-POINT ELR REAR OUTBOARD SEAT BELT

Removal Procedure

1. Remove the deck lid sill plate cover and the luggage compartment wheelhouse trim panel. Refer to *Section 9G, Interior Trim*.
2. Remove the bolt and the luggage compartment seat belt anchor.

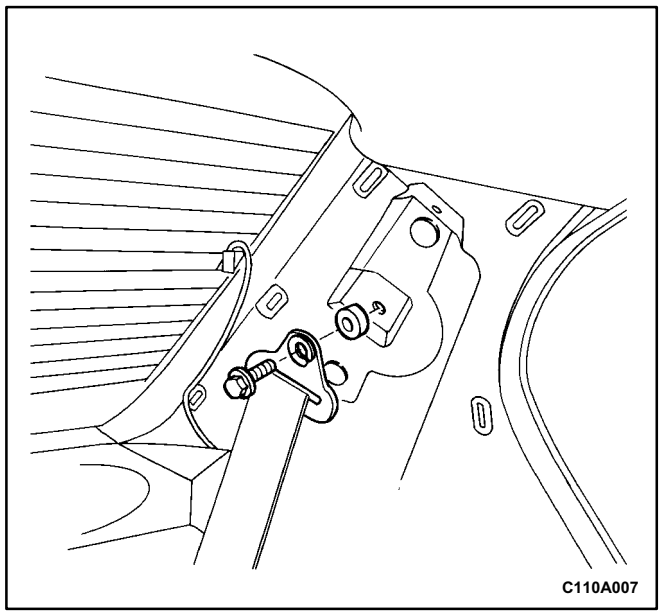

3. Remove the bolt and the C-pillar seat belt anchor.

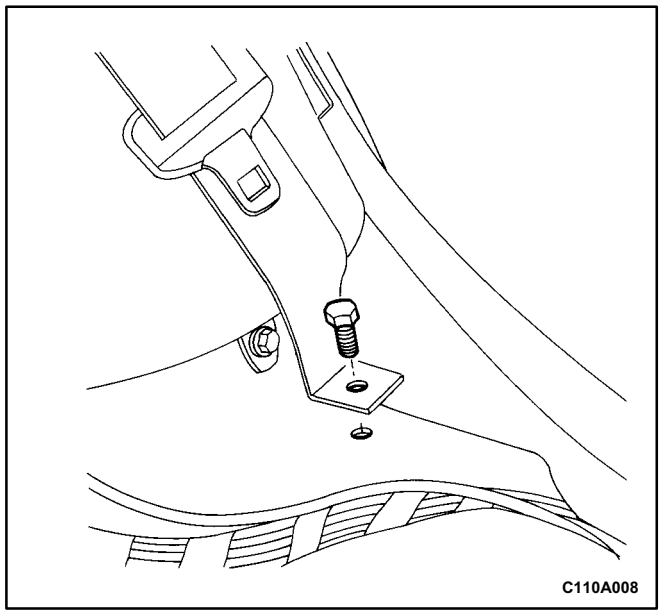

4. Remove the bolt and the floor seat belt anchor.
5. Remove the seat belt.

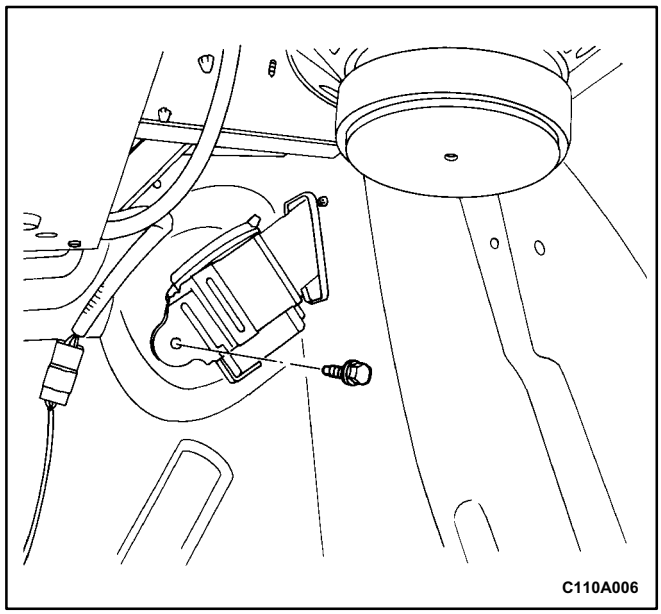

Installation Procedure

Notice: Dissimilar metals in direct contact with each other may corrode rapidly. Make sure to use the correct fasteners to prevent premature corrosion.

1. Install the luggage compartment seat belt anchor with the bolt.

   ### Tighten

   Tighten the seat belt anchor bolt to 35 N•m (26 lb•ft).

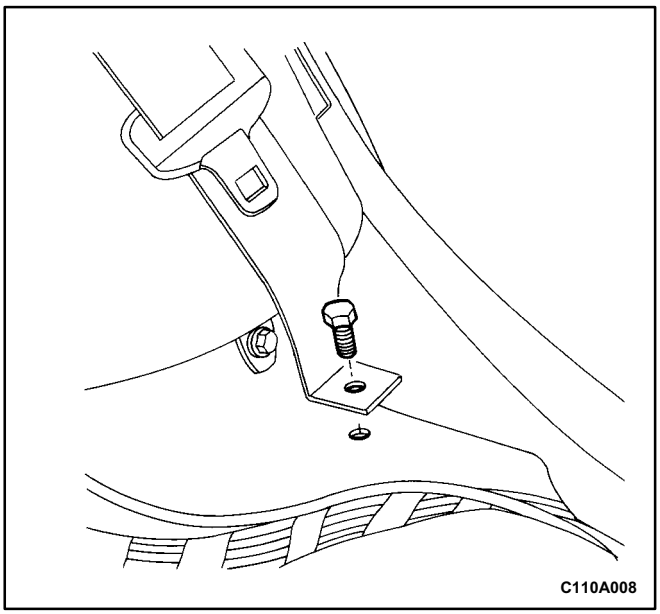

2. Feed the free end of the seat belt from the luggage compartment through the deck lid sill plate.
3. Install the floor seat belt anchor with the bolt.

Tighten

Tighten the seat belt anchor bolt to 35 N•m (26 lb•ft).

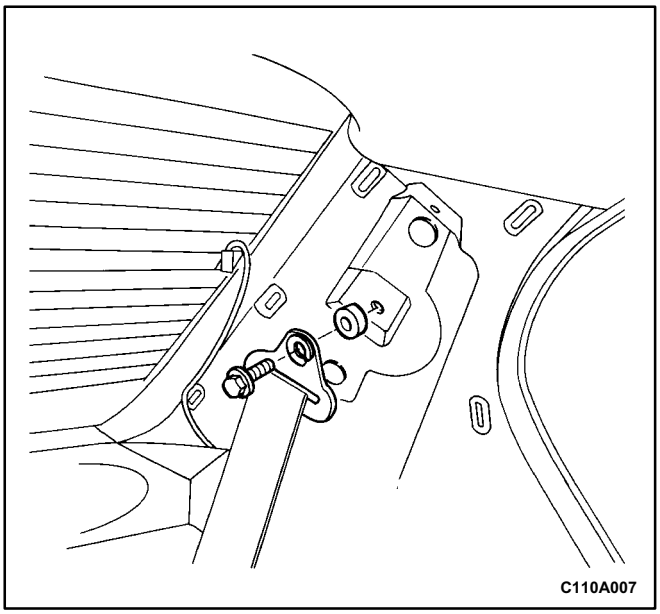

4. Install the C-pillar seat belt anchor with the bolt.

Tighten

Tighten the seat belt anchor bolt to 35 N•m (26 lb•ft).

5. Install the deck lid sill plate cover and the luggage compartment wheelhouse trim panel. Refer to *Section 9G, Interior Trim*.

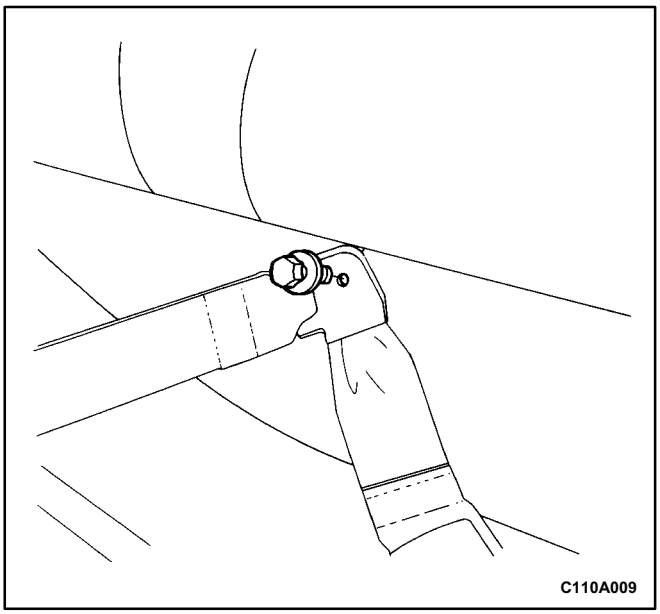

TWO-POINT LAP REAR CENTER SEAT BELT

Removal Procedure

1. Remove the rear seat cushion. Refer to *Section 9H, Seats*.
2. Remove the bolts and the seat belt anchors.

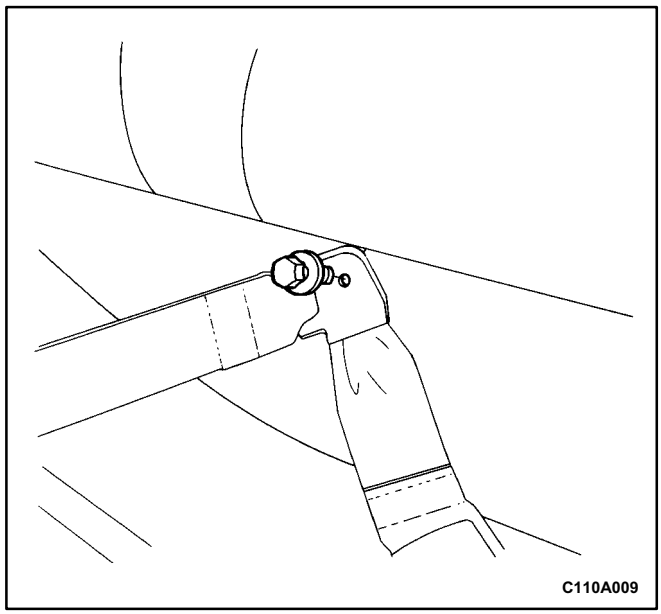

Installation Procedure

Notice: Dissimilar metals in direct contact with each other may corrode rapidly. Make sure to use the correct fasteners to prevent premature corrosion.

1. Install the seat belt anchors with the bolts.

   ### Tighten

   Tighten the seat belt anchor bolts to 35 N•m (26 lb•ft).

2. Install the rear seat cushion. Refer to *Section 9H, Seats*.

GENERAL DESCRIPTION AND SYSTEM OPERATION

DRIVER SEAT BELT REMINDER

The driver's safety belt incorporates a safety belt reminder light in the I/P cluster to remind the driver if the safety belt is not fastened when the the ignition is turned ON.

THREE-POINT ELR FRONT SEAT BELT

The three-point emergency locking retractor (ELR) front seat belt is always unlocked, allowing the passenger freedom of movement, except in emergencies (rapid deceleration, rapid acceleration, or hard cornering maneuvers).

THREE-POINT ELR REAR OUTBOARD SEAT BELT

The rear outboard seating positions use the three-point emergency locking retractor (ELR) seat belts. The three-point ELR seat belt is always unlocked, allowing the passenger freedom of movement, except in emergencies (rapid deceleration, rapid acceleration, or hard cornering maneuvers).

TWO-POINT LAP REAR CENTER SEAT BELT

The two-point lap rear center seat belt is a single continuous length of webbing. The webbing is routed from the anchor through a latch plate and into a single retractor.

CHILD SEAT TETHER ANCHOR

There are three child seat tether anchors located on the rear deck lid sill plate. There is one anchor for each rear seat position.

OPERATIONAL AND FUNCTIONAL CHECKS

Caution:

- ***Keep sharp objects and potentially damaging objects away from the seat belts.***
- ***Avoid bending or damaging any portion of the buckle or the latch plate.***
- ***Do not bleach or dye the belt webbing. Use only mild soap and water in order to clean the belts.***
- ***When installing the seat belt anchor bolts and the screws, start the bolts and the screws by hand in order to prevent cross threading.***
- ***Do not attempt any repairs on the retractor mechanisms or the covers. Replace any defective assemblies with new assemblies.***
- ***Replace any belts that are cut or damaged in any way.***

1. Inspect all seat belt anchor bolts and the screws in order to verify that they are secure.
2. Inspect the seat belt buckle. The buckle must lock and unlock easily.
3. After inserting the latch into the buckle, tug sharply on the belt. The buckle must remain locked.
4. Fully extend the shoulder belt portion to make sure that there is no twisting or tears in the belt.
5. Let the shoulder belt retract fully. The belt should retract easily.

SECTION 8B

SUPPLEMENTAL INFLATABLE RESTRAINTS (SIR)

CAUTION: Disconnect the negative battery cable before removing or installing any electrical unit or when a tool or equipment could easily come in contact with exposed electrical terminals. Disconnecting this cable will help prevent personal injury and damage to the vehicle. The ignition must also be in LOCK unless otherwise noted.

TABLE OF CONTENTS

Specifications 8B-2
Fastener Tightening Specifications 8B-2
Special Tools 8B-2
Special Tools Table 8B-2
Schematic and Routing Diagrams 8B-3
Supplemental Inflatable Restraint System 8B-3
Connector End Views 8B-4
Component Locator 8B-5
Component Location View 8B-5
Diagnosis 8B-6
Diagnostic Trouble Codes (DTC) 8B-6
Scan Tool Diagnostics 8B-6
Use of Special Tools 8B-6
SIR Diagnostic System Check 8B-6
Sensing and Diagnostic Module (SDM) Integrity Check 8B-8
AIRBAG Warning Lamp Stays On With Ignition Switch ON 8B-10
DTC 15 Passenger Deployment Loop Resistance High 8B-12
DTC 16 Passenger Deployment Loop Resistance Low 8B-16
DTC 17 Passenger Deployment Loop Open . . 8B-20
DTC 18 Passenger Deployment Loop Short to Ground 8B-22
DTC 19 Passenger Deployment Loop Short to Voltage 8B-28
DTC 21 Driver Deployment Loop Resistance High 8B-32
DTC 22 Driver Deployment Loop Resistance Low 8B-36
DTC 24 Driver Deployment Loop Short to Ground 8B-40
DTC 25 Driver Deployment Loop Short to Voltage 8B-44
DTC 26 Driver Deployment Loop Open 8B-48
DTC 51 Deployment Commanded 8B-52
DTC 53 Deployment Commanded With Loop Faults Present 8B-54
DTC 61 AIRBAG Warning Lamp Circuit Open 8B-56
DTC 71 Internal Sensing and Diagnostic Module (SDM) Failure 8B-60
Diagnostic Illustration 1 . . . . . 8B-62
Diagnostic Illustration 2 . . . . . 8B-62
Diagnostic Illustration 3 . . . . . 8B-62
Diagnostic Illustration 4 . . . . . 8B-63
Diagnostic Illustration 5 . . . . . 8B-63
Diagnostic Illustration 6 . . . . . 8B-63
Diagnostic Illustration 7 . . . . . 8B-64
Diagnostic Illustration 8 . . . . . 8B-64
Diagnostic Illustration 9 . . . . . 8B-64
Diagnostic Illustration 10 . . . . . 8B-65
Diagnostic Illustration 11 . . . . . 8B-65
Diagnostic Illustration 12 . . . . . 8B-65
Diagnostic Illustration 13 . . . . . 8B-66
Diagnostic Illustration 14 . . . . . 8B-66
Diagnostic Illustration 15 . . . . . 8B-66
Diagnostic Illustration 16 . . . . . 8B-67
Maintenance and Repair 8B-68
On-Vehicle Service 8B-68
Service Precautions 8B-68
Disabling the SIR System 8B-68
Enabling the SIR System 8B-69
Handling, Installation, and Diagnosis 8B-70
Repairs and Inspections Required After an Accident 8B-70
Accident With Deployment - Component Replacement and Inspections . . . 8B-70
Accident With or Without Deployment - Component Inspections 8B-71
Sensing and Diagnostic Module (SDM) 8B-71
Driver Airbag Module 8B-73
Clock Spring 8B-75
Passenger Airbag Module 8B-77
Airbag Module Deployment (In Vehicle) 8B-78

Airbag Module Deployment (Outside of Vehicle) 8B-81
Deployed Airbag Module Disposal Procedure 8B-81
SIR Wiring Repair 8B-82
General Description and System Operation 8B-83
SIR System 8B-83
Airbag Modules 8B-83
Sensing and Diagnostic Module (SDM) 8B-84
AIRBAG Warning Lamp 8B-84
Clock Spring 8B-85

SPECIFICATIONS

FASTENER TIGHTENING SPECIFICATIONS

Application	N•m	LbFt	LbIn
Clock Spring Mounting Screws	1.25	-	11
Driver Airbag Module Mounting Bolts	4.6	-	41
Passenger Airbag Mounting Bolts	10	-	89
Sensing and Diagnostic Module Mounting Bolts	10	-	89

SPECIAL TOOLS

SPECIAL TOOLS TABLE

00000000	**Deployment Tool**
00000000	**Scan Tool**

00000000	**Wiring Harness Checker**

SCHEMATIC AND ROUTING DIAGRAMS

SUPPLEMENTAL INFLATABLE RESTRAINT SYSTEM

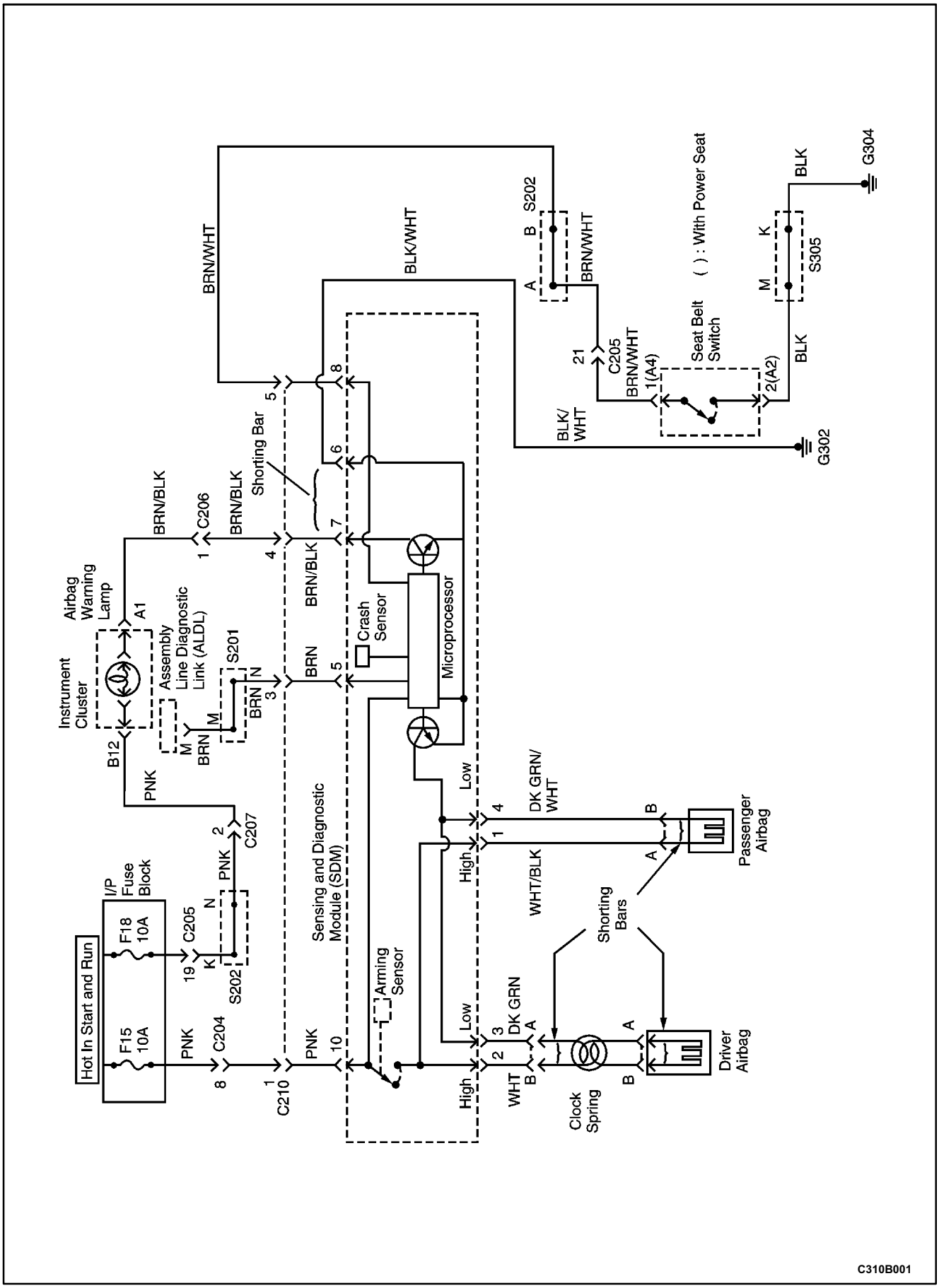

CONNECTOR END VIEWS

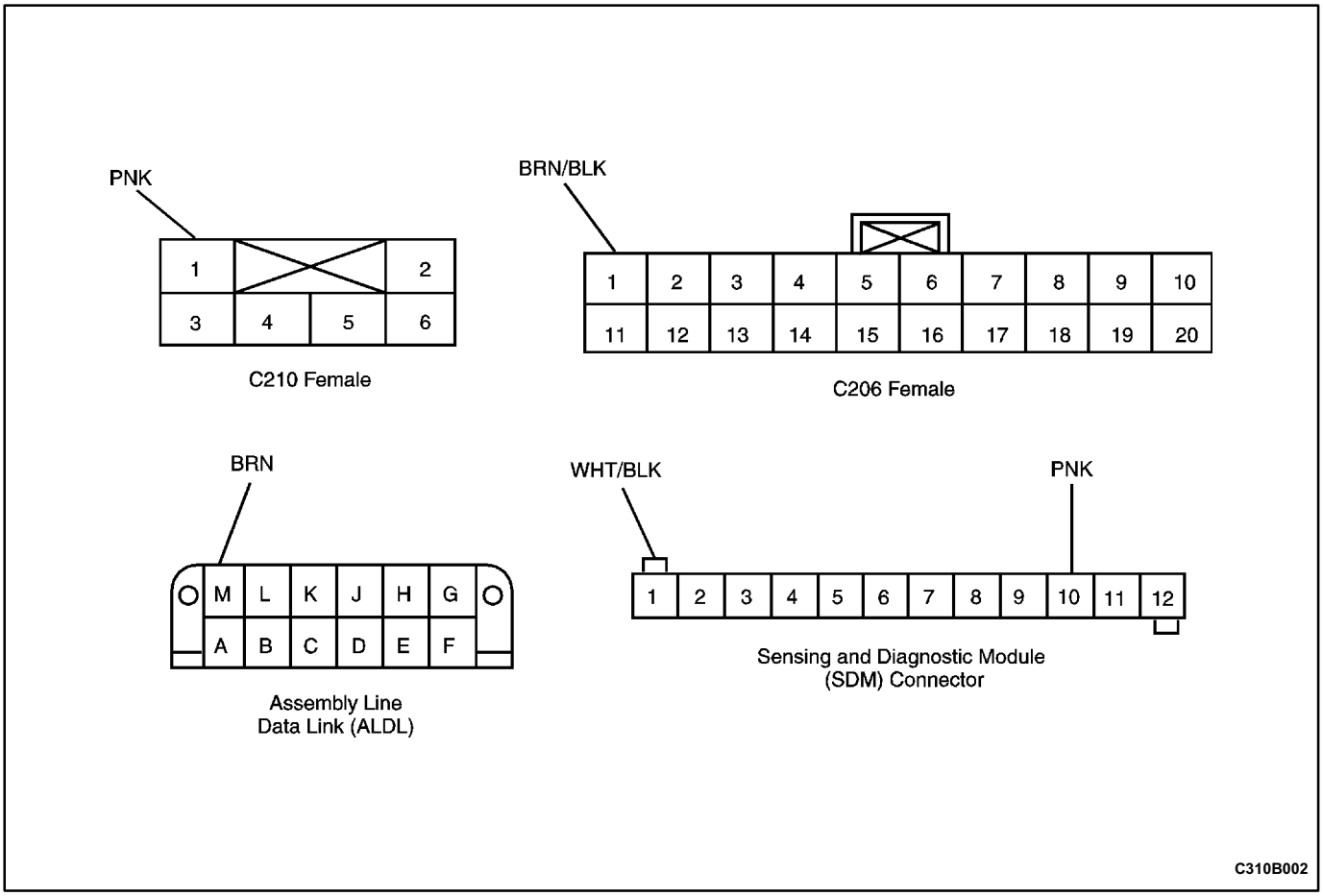

COMPONENT LOCATOR

SIR COMPONENT LOCATION VIEW

(Left-Hand Drive Shown, Right-Hand Drive Similar)

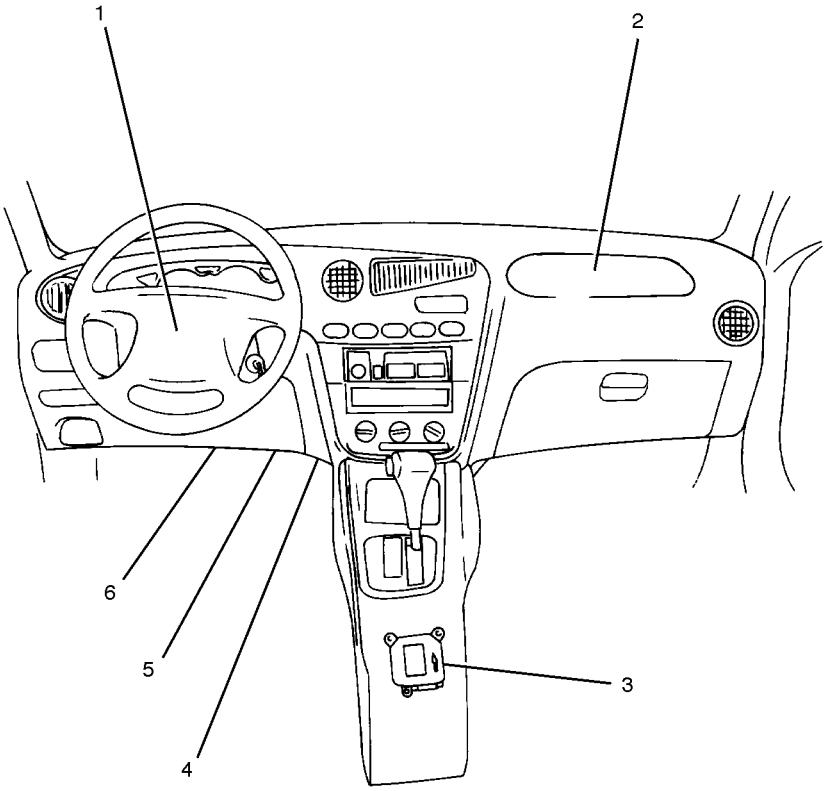

C110B003

1 Driver Airbag
2 Passenger Airbag
3 Sensing and Diagnostic Module (SDM)
4 Assembly Line Data Link (ALDL) Connector or Data Link Connector (DLC)
5 Connector C209
6 Clock Spring Connector

DIAGNOSIS

DIAGNOSTIC TROUBLE CODES (DTC)

The supplemental inflatable restraint (SIR) Diagnostic System Check must always be the starting point for any SIR system diagnosis. The Diagnostic System Check reveals diagnostic trouble codes through the use of a scan tool, and it also checks for proper AIRBAG warning indicator operation.

Two types of diagnostic trouble codes may be recorded:

1. Current diagnostic trouble codes represent malfunctions that are presently being detected. Current diagnostic trouble codes are stored in random access memory.
2. History diagnostic trouble codes represent all malfunctions that were detected since the last time that history memory was cleared. History diagnostic trouble codes are stored in the electronically erasable programmable read only memory (EEPROM).

SCAN TOOL DIAGNOSTICS

A scan tool can read serial data from terminal M of the assembly line diagnostic link (ALDL). A specific replaceable cartridge must be attached to the scan tool before the scan tool can communicate with the sensing and diagnostic module (SDM) for the purpose of diagnostics. The scan tool is used to read diagnostic trouble codes, and to clear some diagnostic trouble codes after a repair is completed. By design, certain codes cannot be cleared. To use the scan tool, turn the ignition OFF, connect the scan tool to the ALDL, and turn the ignition switch to ON. Follow the instructions in the scan tool manual. The SDM sends serial data from terminal 5 of the SDM to terminal M of the ALDL.

USE OF SPECIAL TOOLS

A digital multimeter is used to measure voltage and resistance. A scan tool is used to read and clear diagnostic trouble codes. A wiring harness checker and deployment tool are under development, and service bulletins will be issued if these tools become operational.

SIR DIAGNOSTIC SYSTEM CHECK

Notice: If the vehicle interior has been exposed to extensive water intrusion such as water leaks, driving through high water, flooding, or other causes, the sensing and diagnostic module (SDM) and the SDM connector may need to be replaced. With the ignition OFF, inspect the area around the SDM, including the carpet. If any significant soaking or evidence of previous soaking is detected, the water must be removed, water damage repaired, and the SDM and SDM connector must be replaced. Before attempting any of these repairs, the supplemental inflatable restraint (SIR) system must be disabled. Refer to „Disabling the SIR System" and „Sensing and Diagnostic Module (SDM)" in this section for instructions on how to disable the SIR system and replace the SDM.

The diagnostic procedures used in this section are designed to find and repair SIR system conditions. To get the best results, it is important to use the diagnostic charts and follow the sequence listed below.

1. Perform the SIR Diagnostic System Check. The SIR Diagnostic System Check must be the starting point of any SIR diagnostics. The SIR Diagnostic System Check reveals diagnostic trouble codes through the use of a scan tool, and it also checks for proper AIRBAG indicator operation.
2. Refer to the proper diagnostic chart as directed by the SIR Diagnostic System Check. The SIR Diagnostic System Check will lead you to the correct chart to diagnose any SIR system malfunctions. Bypassing these procedures may result in extended diagnostic time, incorrect diagnosis, and incorrect parts placement.
3. Repeat the SIR Diagnostic System Check after any repair or diagnostic procedures have been performed. Performing the SIR Diagnostic System Check after all repair or diagnostic procedures will ensure that the repair has been made correctly and that no other malfunctions exist.

Circuit Description

When the ignition switch is first turned to ON, Ignition 1 voltage is applied from the airbag fuse to the sensing and diagnostic module (SDM) at input terminal 10. The SDM responds by flashing the AIRBAG indicator seven times and then turning it off while the SDM performs tests on the SIR system.

Diagnostic Aids

The order in which diagnostic trouble codes are diagnosed is very important. Failure to diagnose the DTCs in the order specified may result in extended diagnostic time, incorrect diagnosis and incorrect parts replacement.

Test Description

The number(s) below refer to step(s) on the diagnostic table.

3. This test will identify the stored diagnostic trouble codes and whether they are current or history. A history DTC indicates that the malfunction has been repaired or is intermittent.
6. This test differentiates between an indicator that will not come on and an indicator that stays on when it should be off.
7. See the first caution below.
9. See the cautions below.
10. This test will determine whether history diagnostic trouble codes are stored and will identify them.
11. A history DTC indicates that the malfunction has been repaired or is intermittent.

SIR Diagnostic System Check

Caution: The SDM can maintain sufficient voltage to deploy the airbags for 10 minutes after the ignition is OFF and the fuse has been removed. If the airbags are not disconnected, service cannot begin until 10 minutes have passed after disconnecting power to the SDM.

Caution: During service procedures, be very careful when handling the SDM. Never strike or jar the SDM. Never power up the SIR system when the SDM is not rigidly attached to the vehicle. All SDM mounting bolts must be carefully tightened, and the SDM arrow must be pointing toward the front of the vehicle to ensure proper operation of the SIR system. The SDM could be activated if it is powered when it is not rigidly attached to the vehicle, resulting in unexpected deployment and possible injury.

Step	Action	Value(s)	Yes	No
1	1. Turn the ignition switch to ON. 2. Observe the AIRBAG indicator as the ignition is being turned ON. Does the indicator flash seven times?	-	Go to *Step 2*	Go to *Step 6*
2	Observe the AIRBAG indicator after it flashed seven times. Does the indicator turn OFF?	-	Go to *Step 10*	Go to *Step 3*
3	1. Turn the ignition to LOCK and remove the key. 2. Connect the scan tool to the assembly line diagnostic link (ALDL). Follow the directions given in the scan tool manual. 3. Turn the ignition ON. 4. Request the SIR DTC display with the scan tool. 5. Record all DTCs, indicating each as either a current or a history DTC. Are only history DTCs shown?	-	Refer to the DTC chart for any DTC that was set, and refer to the Diagnostic Aids for that specific DTC	Go to *Step 4*
4	Check the recorded DTCs. Are current DTCs 18, 24, or 51 set?	-	Go to the DTC chart indicated by any of these three codes	Go to Step 5
5	Check the recorded DTCs. Are there any other current DTCs shown?	-	Diagnose the remaining current DTCs from lowest number to highest	Refer to the DTC chart for any history DTC that was set, and refer to „Diagnostic Aids” for that specific DTC
6	Observe the AIRBAG indicator after the ignition has been turned ON. Does the AIRBAG indicator stay on?	-	Go to „AIRBAG Warning Lamp Stays on with Ignition Switch ON”	Go to *Step 7*
7	1. Turn the ignition to LOCK and remove the key. 2. Temporarily disconnect the passenger airbag and the yellow clock spring connector on the steering column. 3. Check the AIRBAG indicator bulb and circuit. Are the bulb and the bulb circuit in good condition?	-	Go to *Step 9*	Go to *Step 8*

SIR Diagnostic System Check (Cont'd)

Step	Action	Value(s)	Yes	No
8	1. Replace the bulb or repair the bulb circuit. 2. Connect all SIR system components, and ensure that all components are properly mounted. Is the repair complete?	-	Go to *Step 1*	-
9	1. Turn the ignition to LOCK and remove the key. 2. Disconnect the passenger airbag and the yellow clock spring connector on the steering column. 3. Replace the SDM. The arrow must be pointing toward the front of the vehicle. 4. Reconnect all SIR system components, and ensure that all components are properly mounted. Is the repair complete?	-	Go to *Step 1*	-
10	1. Turn the ignition to LOCK and remove the key. 2. Connect the scan tool to the assembly line diagnostic link (ALDL) connector. Follow the directions given in the scan tool manual. 3. Turn the ignition to ON. 4. Request the SIR DTC display with the scan tool. 5. Record all history DTCs. Are any SIR DTCs displayed?	-	Go to *Step 11*	System OK
11	Turn the ignition to OFF. Is DTC 71 set?	-	Go to „DTC 71 Internal SDM Failure”	Refer to the DTC chart for any history DTC that was set, and refer to „Diagnostic Aids” for that specific DTC

SENSING AND DIAGNOSTIC MODULE (SDM) INTEGRITY CHECK

The following diagnostic chart must be followed when all circuitry outside the SDM has been found to operate properly, as indicated by following the appropriate diagnostic trouble code (DTC) chart or symptom chart. This chart verifies the need for SDM replacement.

Circuit Description

When the SDM recognizes Ignition 1 voltage greater than 8.2 volts at terminal 10 of the SDM, the AIRBAG indicator is flashed seven times to verify operation. At this time the SDM performs turn-on tests followed by resistance measurement tests and continuous monitoring tests. When a malfunction is detected, the SDM sets a current DTC and illuminates the AIRBAG indicator. When the malfunction is no longer detected and/or the ignition switch is cycled, the SDM will clear current DTCs and move them to a history file, except for DTCs 18, 24, 51, 53, and sometimes 71. DTCs 18, 24, 51, and 53 will not clear using a scan tool because these codes require replacement of the SDM. The SDM must be replaced only after the malfunction that set the DTC has been repaired.

Test Description

The number(s) below refer to step(s) on the diagnostic table.

1. This test confirms a current malfunction. If no current malfunction is occurring (history DTC set), refer to „Diagnostic Aids” for the appropriate DTC. The SDM should not be replaced for a history DTC except when directed.
2. This test checks for a malfunction introduced into the supplemental inflatable restraint (SIR) system during the diagnostic process. It is extremely unlikely that a malfunctioning SDM would cause a new malfunction to occur during the diagnostic process.
4. See the cautions below.

Sensing and Diagnostic Module (SDM) Integrity Check

Caution: The SDM can maintain sufficient voltage to deploy the airbags for 10 minutes after the ignition is OFF and the fuse has been removed. If the airbags are not disconnected, service cannot begin until 10 minutes have passed after disconnecting power to the SDM.

Caution: During service procedures, be very careful when handling the SDM. Never strike or jar the SDM. Never power up the SIR system when the SDM is not rigidly attached to the vehicle. All SDM mounting bolts must be carefully tightened, and the SDM arrow must be pointing toward the front of the vehicle to ensure proper operation of the SIR system. The SDM could be activated if it is powered when it is not rigidly attached to the vehicle, resulting in unexpected deployment and possible injury.

Step	Action	Value(s)	Yes	No
1	1. Turn the ignition to LOCK and remove the key. 2. Connect all SIR system components, and ensure that all components are properly mounted. 3. Ensure that the ignition switch has been OFF for at least 30 seconds. 4. Observe the AIRBAG indicator as the ignition is turned ON. Does the indicator lamp flash seven times and then turn off?	-	Clear the SIR system DTCs and go to „Diagnostic System Check”	Go to *Step 2*
2	Using a scan tool, request the DTC display. Is the same DTC displayed that was previously occurring when the SIR Diagnostic System Check was previously performed?	-	Go to *Step 3*	Go to the table for the DTC indicated
3	1. Clear the SIR DTCs. 2. Turn the ignition OFF for at least 30 seconds. 3. Observe the AIRBAG indicator as the ignition is turned ON. Does the AIRBAG indicator flash seven times and then turn off?	-	System OK	Go to *Step 4*
4	1. Turn the ignition to LOCK and remove the key. 2. Disconnect the passenger airbag and the yellow clock spring connector on the steering column. 3. Replace the SDM. The arrow must be pointing toward the front of the vehicle. 4. Connect all SIR system components, and ensure that all components are properly mounted. Is the repair complete?	-	Go to „Diagnostic System Check”	-

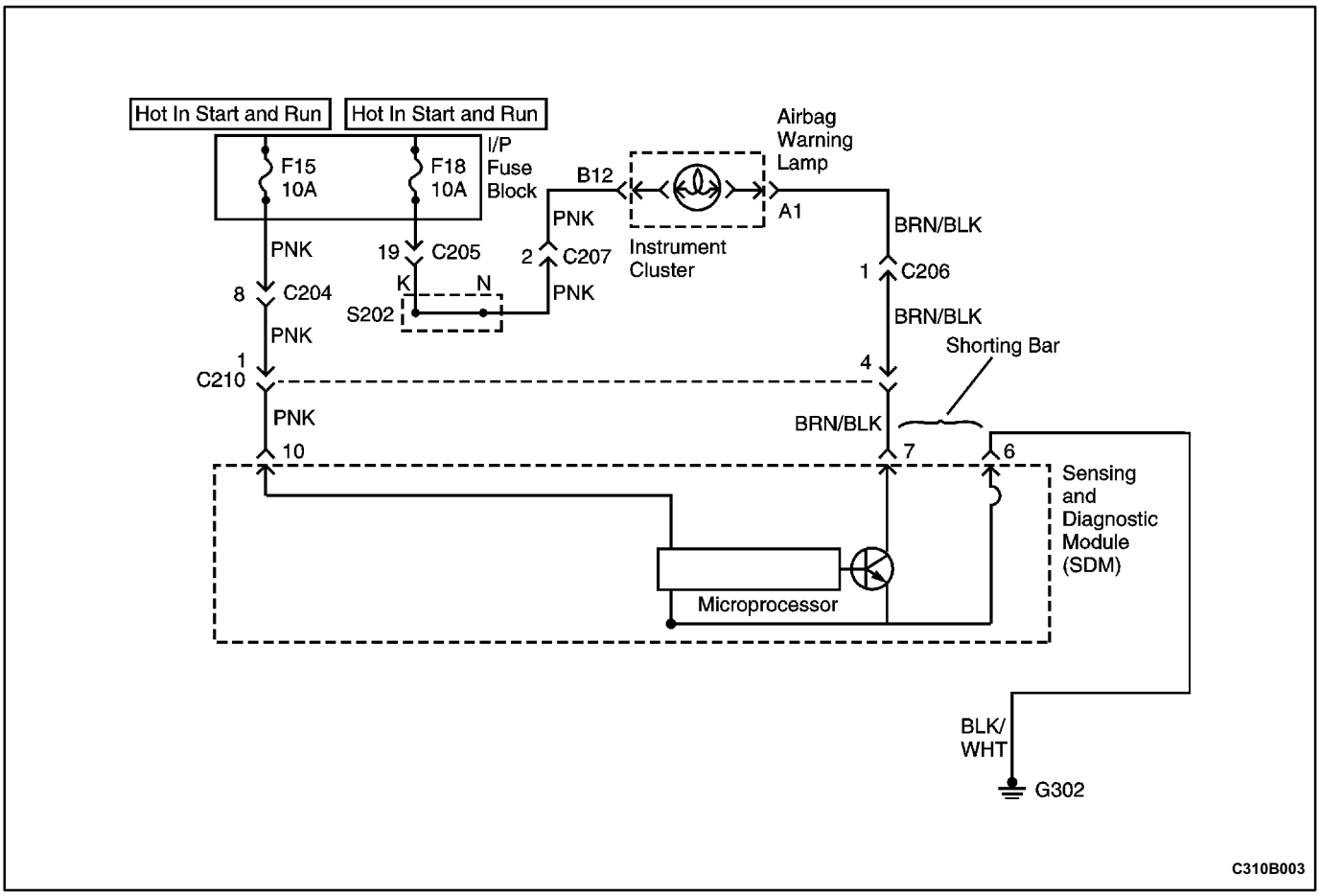

AIRBAG WARNING LAMP STAYS ON WITH IGNITION SWITCH ON

Circuit Description

The AIRBAG indicator will stay on if the sensing and diagnostic module (SDM) connector is not securely attached to the SDM. There is a shorting bar in the SDM connector which completes the circuit between the indicator lamp circuit and ground. The shorting bar is disengaged when the connector is properly attached.

When the ignition switch is first turned to ON, Ignition 1 voltage is applied to the instrument fuse for the indicator lamp and also to the AIRBAG fuse for the SDM input terminal 10. If Ignition 1 is outside the range of 8.2-16 volts, the AIRBAG indicator will come on and stay on with no DTCs set.

A short to ground between the SDM and the indicator lamp could also cause the AIRBAG indicator to stay on.

Test Description

The number(s) below refer to step(s) on the diagnostic table.

8. See the caution below.

AIRBAG Warning Lamp Stays on with Ignition Switch ON

Caution: The SDM can maintain sufficient voltage to deploy the airbags for 10 minutes after the ignition is OFF and the fuse has been removed. If the airbags are not disconnected, service cannot begin until 10 minutes have passed after disconnecting power to the SDM.

Step	Action	Value(s)	Yes	No
1	Check the SDM connector to verify that it is properly connected to the SDM. Is the SDM connector properly connected?	-	Go to *Step 3*	Go to *Step 2*
2	Connect the SDM connector. Is the repair complete?	-	System OK	-
3	1. Turn the ignition OFF. 2. Disconnect the SDM connector. 3. Turn the ignition ON. 4. Check the voltage at the SDM connector terminal 10. Is the ignition voltage greater than the specified value?	8.2 V	Go to „SDM Integrity Check”	Go to *Step 4*
4	1. Turn the ignition ON. 2. Check the voltage supply to the AIRBAG fuse F15. Is the voltage within the specified value?	8.2-16 V	Go to *Step 6*	Go to *Step 5*
5	Repair the power supply to the AIRBAG fuse. Is the repair complete?	-	System OK	-
6	Check the AIRBAG fuse. Is the fuse in good condition?	-	Go to *Step 8*	Go to *Step 7*
7	Replace the AIRBAG fuse. Is the repair complete?	-	System OK	-
8	1. Turn the ignition to LOCK and remove the key. 2. Temporarily disconnect the passenger airbag and the yellow clock spring connector on the steering column. 3. Check for an open circuit between terminal 10 of the SDM and the AIRBAG fuse F15. Is there an open circuit?	-	Go to *Step 9*	Go to *Step 10*
9	Repair the open circuit between the SDM and the AIRBAG fuse F15. Is the repair complete?	-	System OK	-
10	Repair the short circuit to ground between the AIRBAG indicator lamp and terminal 7 of the SDM. Is the repair complete?	-	System OK	-

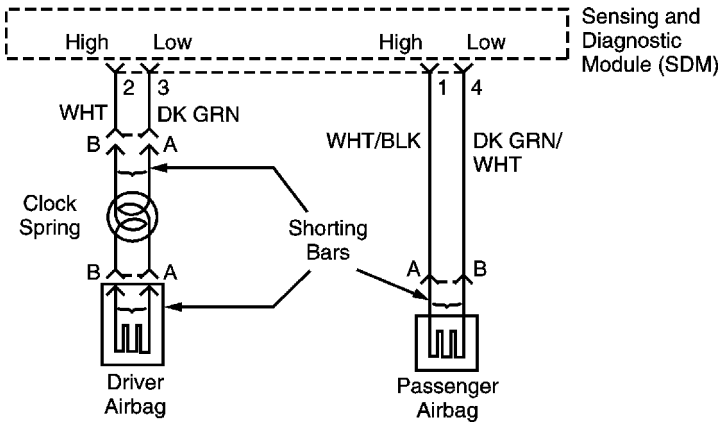

B110B005

DIAGNOSTIC TROUBLE CODE (DTC) 15
PASSENGER DEPLOYMENT LOOP RESISTANCE HIGH

Circuit Description

When the ignition switch is turned to ON, the sensing and diagnostic module (SDM) will perform tests to diagnose critical malfunctions within itself. Upon passing these tests, Ignition 1 and deployment loop voltages are measured to ensure that they are within their respective normal voltage ranges. The SDM then proceeds with the resistance measurement test. Passenger low terminal 4 is grounded through a current sink, and the passenger current source is connected to the passenger high terminal to allow a known amount of current to flow. By monitoring the voltage difference between passenger high and passenger low, the SDM calculates the combined resistance of the passenger inflator module, harness wiring, and connector terminal contacts.

DTC 15 Will Set When

The combined resistance of the passenger deployment loop is above a specified value. The test is run once each ignition cycle during the resistance measurement test when

- No higher priority faults are detected when the ignition is turned ON.
- Ignition 1 voltage is above a specified value.

Action Taken

The SDM will turn on the AIRBAG indicator and set diagnostic trouble code (DTC) 15.

DTC 15 Will Clear When

The ignition switch is turned OFF or the scan tool CLEAR CODES command is received.

Test Description

The number(s) below refer to step(s) on the diagnostic table.

2. See the first caution below.

8. See the cautions below.

Diagnostic Aids

An intermittent condition is likely to be caused by a poor connection at the passenger inflator module harness connector terminals, SDM terminals 1 or 4, or poor wiretoterminal connections in that circuit. The test for this DTC is run only while the AIRBAG indicator is performing the bulb test. When a scan tool CLEAR CODES command is issued and the malfunction is still present, the DTC will not reappear until the next ignition cycle.

DTC 15 - Passenger Deployment Loop Resistance High

Caution: The SDM can maintain sufficient voltage to deploy the airbags for 10 minutes after the ignition is OFF and the fuse has been removed. If the airbags are not disconnected, service cannot begin until 10 minutes have passed after disconnecting power to the SDM.

Caution: Never measure the resistance of an inflator module with an ohmmeter. The ohmmeter battery could unexpectedly deploy the airbag which would created the possibility of severe injury and would require the replacement of otherwise useable components.

Caution: During service procedures, be very careful when handling the SDM. Never strike or jar the SDM. Never power up the SIR system when the SDM is not rigidly attached to the vehicle. All SDM mounting bolts must be carefully tightened, and the SDM arrow must be pointing toward the front of the vehicle to ensure proper operation of the SIR system. The SDM could be activated if it is powered when it is not rigidly attached to the vehicle, resulting in unexpected deployment and possible injury.

Step	Action	Value(s)	Yes	No
1	Perform the SIR Diagnostic System Check. Is the SIR Diagnostic System Check complete?	-	Go to *Step 2*	-
2	1. Turn the ignition to LOCK and remove the key. 2. Disconnect the passenger airbag module yellow two-way connector located at the rear of the glove box. 3. Inspect the passenger airbag module connector for damage or loose terminals or wires. Is a faulty connector, terminal, or wire detected?	-	Go to *Step 3*	Go to *Step 4*
3	1. Replace the faulty connector, component, terminal, or wire. 2. Connect all SIR system components. Is the repair complete?	-	Go to „SIR Diagnostic System Check”	-
4	Check the SDM connector terminals 1 and 4 for loose terminals. Is a problem found?	-	Go to *Step 5*	Go to *Step 6*
5	1. Replace the loose terminals or wires. 2. Connect all SIR system components. Is the repair complete?	-	Go to „SIR Diagnostic System Check”	-
6	1. Disconnect the passenger airbag. 2. Using an ohmmeter, check for an open circuit between the SDM terminals 1 and 4 and the passenger airbag connector. ● Refer to „Diagnostic Illustration 1” in this section. Does the ohmmeter show the specified value?	∞	Go to *Step 7*	Go to *Step 8*
7	1. Replace the open wires. 2. Connect all SIR system components. Is the repair complete?	-	Go to „SIR Diagnostic System Check”	-
8	1. Replace the SDM. The arrow must be pointing toward the front of the vehicle. 2. Connect all SIR system components, and ensure that all components are properly mounted. 3. Connect the scan tool. 4. Turn the ignition ON. 5. Using the scan tool, request the DTCs. Is a current DTC 15 indicated?	-	Go to *Step 9*	Go to „SIR Diagnostic System Check”

DTC 15 - Passenger Deployment Loop Resistance High (Cont'd)

Step	Action	Value(s)	Yes	No
9	1. Turn the ignition to LOCK and remove the key. 2. Disconnect the passenger airbag electrical connector. 3. Replace the passenger airbag module. 4. Connect all SIR system components. Is the repair complete?	-	Go to „SIR Diagnostic System Check”	-

BLANK

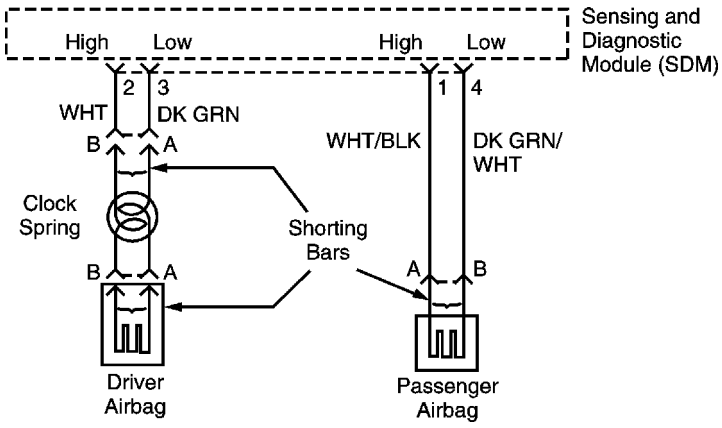

B110B005

DIAGNOSTIC TROUBLE CODE (DTC) 16
PASSENGER DEPLOYMENT LOOP RESISTANCE LOW

Circuit Description

When the ignition switch is turned to ON, the sensing and diagnostic module (SDM) will perform tests to diagnose critical malfunctions within itself. Upon passing these tests, Ignition 1 and deployment loop voltages are measured to ensure that they are within their respective normal voltage ranges. The SDM then proceeds with the resistance measurement test. Passenger low terminal 4 is grounded through a current sink, and the passenger current source is connected to the passenger high terminal to allow a known amount of current to flow. By monitoring the voltage difference between the passenger high and passenger low terminals, the SDM calculates the combined resistance of the passenger inflator module, harness wiring, and connector terminal contacts.

DTC 16 Will Set When

The resistance of the passenger deployment loop is below a specified value. The test is run once each ignition cycle during the resistance measurement test when

- No higher priority faults are detected when the ignition is turned ON.
- Ignition 1 voltage is above a specified value.

Action Taken

The SDM will turn ON the AIRBAG indicator and set a diagnostic trouble code (DTC) 16.

DTC 16 Will Clear When

The ignition switch is turned OFF or the scan tool CLEAR CODES command is received.

Test Description

The number(s) below refer to step(s) on the diagnostic table.

3. See the first caution below.
6. See the first caution below.
10. See the cautions below.

Diagnostic Aids

An intermittent condition is likely to be caused by a short between the passenger high and low circuits, a short between the passenger high circuit and the driver high circuit, or a short between the passenger high circuit and the driver low circuit. The problem could also be a malfunctioning shorting bar in the passenger airbag connector, which would require replacement of the passenger airbag module. The test for this DTC is run only while the AIRBAG indicator is performing the turn-on test. When a scan tool CLEAR CODES command is issued while the malfunction is still present, the DTC will not reappear until the next ignition cycle.

DTC 16 - Passenger Deployment Loop Resistance Low

Caution: The SDM can maintain sufficient voltage to deploy the airbags for 10 minutes after the ignition is OFF and the fuse has been removed. If the airbags are not disconnected, service cannot begin until 10 minutes have passed after disconnecting power to the SDM.

Caution: Never measure the resistance of an inflator module with an ohmmeter. The ohmmeter battery could unexpectedly deploy the airbag which would created the possibility of severe injury and would require the replacement of otherwise useable components.

Caution: During service procedures, be very careful when handling the SDM. Never strike or jar the SDM. Never power up the SIR system when the SDM is not rigidly attached to the vehicle. All SDM mounting bolts must be carefully tightened, and the SDM arrow must be pointing toward the front of the vehicle to ensure proper operation of the SIR system. The SDM could be activated if it is powered when it is not rigidly attached to the vehicle, resulting in unexpected deployment and possible injury.

Step	Action	Value(s)	Yes	No
1	Perform the SIR Diagnostic System Check. Is the SIR Diagnostic System Check complete?	-	Go to *Step 2*	-
2	1. Turn the ignition to LOCK and remove the key. 2. Connect the scan tool to the assembly line diagnostic link (ALDL) connector. 3. Turn the ignition ON. Is DTC 22 also current?	-	Go to *Step 3*	Go to *Step 4*
3	1. Turn the ignition to LOCK and remove the key. 2. Disconnect the yellow airbag connectors at the steering column and at the passenger airbag. 3. Repair the short between the driver airbag high circuit and the passenger airbag high circuit. 4. Make sure all SIR system components are reconnected and all components are properly mounted. Is the repair complete?	-	Go to „SIR Diagnostic System Check”	-
4	1. Turn the ignition to LOCK and remove the key. 2. Make sure the passenger airbag module yellow two-way connector is seated properly. Is the yellow two-way passenger airbag connector seated properly?	-	Go to *Step 6*	Go to *Step 5*
5	1. Seat the passenger airbag yellow two-way connector. 2. Make sure all SIR system components are reconnected and all components are properly mounted. Is the repair complete?	-	Go to „SIR Diagnostic System Check”	-
6	1. Turn the ignition to LOCK and remove the key. 2. Temporarily disconnect the passenger airbag and the yellow clock spring connector on the steering column. 3. Check for a short between the passenger high and passenger low circuits (SDM terminals 1 and 4). ● Refer to „Diagnostic Illustration 2” in this section. Is there a short between the passenger high and low circuits?	-	Go to *Step 7*	Go to *Step 8*

DTC 16 - Passenger Deployment Loop Resistance Low (Cont'd)

Step	Action	Value(s)	Yes	No
7	1. Repair the short between the passenger high circuit and the passenger low circuit. 2. Make sure all SIR system components are reconnected and all components are properly mounted. Is the repair complete?	-	Go to „SIR Diagnostic System Check”	-
8	Check for a short between the passenger high and driver low circuits. ● Refer to „Diagnostic Illustration 3” in this section. Is there a short between the passenger high and driver low circuits (SDM terminals 1 and 3)?	-	Go to *Step 9*	Go to *Step 10*
9	1. Repair the short between the passenger high circuit and the driver low circuit. 2. Make sure all SIR system components are reconnected and all components are properly mounted. 3. Command CLEAR CODES with the scan tool. Is the repair complete?	-	Go to „SIR Diagnostic System Check”	-
10	1. Replace the SDM. The arrow must be pointing toward the front of the vehicle. 2. Connect all SIR system components, and ensure that all components are properly mounted. 3. Perform the SIR Diagnostic System Check. Is DTC 16 still current?	-	Go to *Step 11*	System OK
11	1. Disconnect the passenger airbag electrical connector. 2. Replace the passenger airbag module. 3. Make sure all SIR system components are reconnected and all components are properly mounted. 4. Command CLEAR CODES with the scan tool. Is the repair complete?	-	Go to „SIR Diagnostic System Check”	-

BLANK

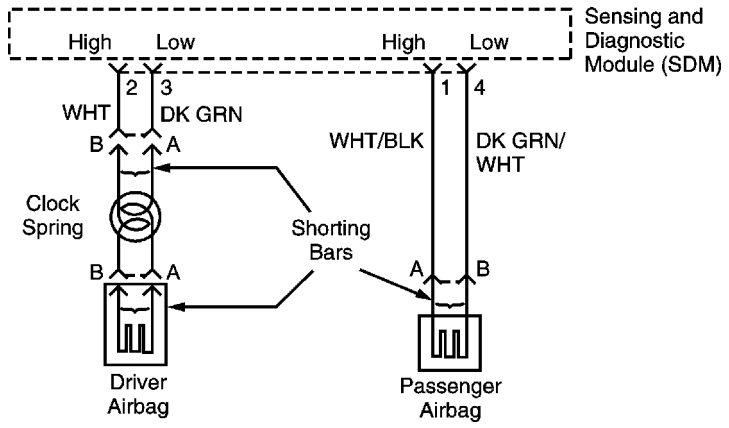

B110B005

DIAGNOSTIC TROUBLE CODE (DTC) 17
PASSENGER DEPLOYMENT LOOP OPEN

Circuit Description

When the ignition switch is turned to ON, the sensing and diagnostic module (SDM) will perform tests to diagnose critical malfunctions within itself. After passing these tests, Ignition 1 and deployment loop voltages are measured to ensure that they are within their respective normal voltage ranges. The SDM then proceeds with the resistance measurement test. Passenger low terminal 4 is grounded through a current sink, and the passenger current source is connected to the passenger high terminal to allow a known amount of current to flow. By monitoring the voltage difference between passenger high and passenger low, the SDM calculates the combined resistance of the passenger inflator module, the harness wiring, and the connector terminal contacts.

DTC 17 Will Set When

The resistance of the passenger deployment loop is above a specified value for 500 milliseconds. The resistance is monitored during the deployment loop continuity test and during continuous monitoring.

Action Taken

The SDM will turn on the AIRBAG indicator and set a diagnostic trouble code (DTC) 17.

DTC 17 Will Clear When

The resistance of the passenger deployment loop is below a specified value for 500 milliseconds during continuous monitoring.

Test Description

The number(s) below refer to step(s) on the diagnostic table.

3. See the first caution below.
8. See the cautions below.

Diagnostic Aids

An intermittent condition is likely to be caused by a poor connection, either at the passenger airbag connector or at terminals 1 and 4 of the SDM. An open wire in the passenger deployment loop will also set DTC 17.

DTC 17 - Passenger Deployment Loop Open

Caution: The SDM can maintain sufficient voltage to deploy the airbags for 10 minutes after the ignition is OFF and the fuse has been removed. If the airbags are not disconnected, service cannot begin until 10 minutes have passed after disconnecting power to the SDM.

Caution: Never measure the resistance of an inflator module with an ohmmeter. The ohmmeter battery could unexpectedly deploy the airbag which would created the possibility of severe injury and would require the replacement of otherwise useable components.

Caution: During service procedures, be very careful when handling the SDM. Never strike or jar the SDM. Never power up the SIR system when the SDM is not rigidly attached to the vehicle. All SDM mounting bolts must be carefully tightened, and the SDM arrow must be pointing toward the front of the vehicle to ensure proper operation of the SIR system. The SDM could be activated if it is powered when it is not rigidly attached to the vehicle, resulting in unexpected deployment and possible injury.

Step	Action	Value(s)	Yes	No
1	Perform the SIR Diagnostic System Check. Is the SIR Diagnostic System Check complete?	-	Go to *Step 2*	-
2	1. Turn the ignition to LOCK and remove the key. 2. Disconnect the passenger airbag connector. 3. Inspect the terminals for damage or improper connection. 4. Repair any damaged pins or terminals on the wiring harness side of the connector. If the pigtail or airbag side of the connector is damaged, the passenger airbag must be replaced. 5. If no damage was found, reconnect the passenger airbag yellow two-way connector and make sure it is seated properly. 6. Turn the ignition ON. Is DTC still current?	-	Go to *Step 3*	System OK
3	1. Turn the ignition to LOCK and remove the key. 2. Temporarily disconnect the two yellow SIR connectors at the passenger airbag and on the steering column. 3. Check terminals 1 and 4 at the SDM. Are there any loose wires or damaged pins or terminals?	-	Go to *Step 4*	Go to *Step 5*
4	1. Repair any loose or damaged pins or SDM terminals. 2. Make sure all SIR system components are reconnected and all components are properly mounted. Is the repair complete?	-	Go to „SIR Diagnostic System Check”	-
5	Check for an open circuit between the SDM and the passenger airbag connector. ● Refer to „Diagnostic Illustration 1” in this section. Is there an open circuit?	-	Go to *Step 6*	Go to *Step 7*
6	1. Repair the open circuit between the SDM and the passenger inflator module. 2. Make sure all SIR system components are reconnected and all components are properly mounted. Is the repair complete?	-	Go to „SIR Diagnostic System Check”	-

DTC 17 - Passenger Deployment Loop Open (Cont'd)

Step	Action	Value(s)	Yes	No
7	1. Replace the SDM. The arrow must be pointing toward the front of the vehicle. 2. Connect all SIR system components, and ensure that all components are properly mounted. 3. Perform the SIR Diagnostic System Check. Is DTC 17 still current?	-	Go to *Step 8*	System OK
8	1. Turn the ignition to LOCK and remove the key. 2. Disconnect the yellow SIR connector at the passenger airbag. 3. Replace the passenger airbag module. 4. Make sure all SIR system components are reconnected and all components are properly mounted. Is the repair complete?	-	Go to „SIR Diagnostic System Check”	-

BLANK

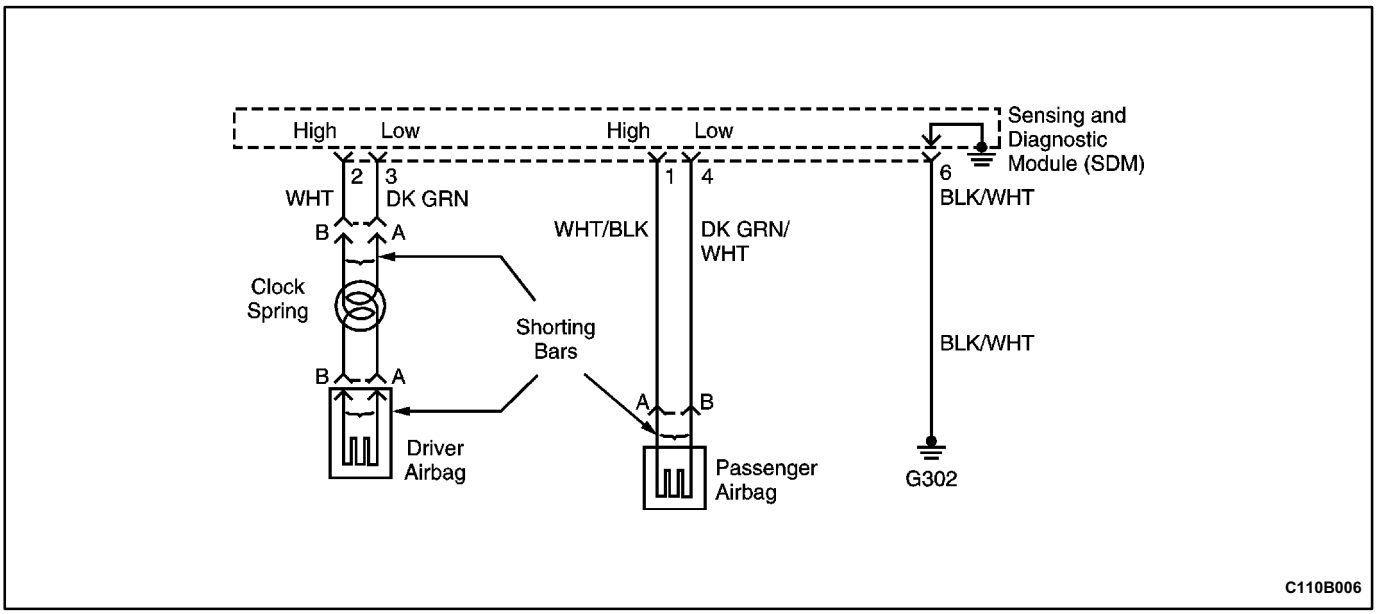

DIAGNOSTIC TROUBLE CODE (DTC) 18 PASSENGER DEPLOYMENT LOOP SHORT TO GROUND

Circuit Description

When the ignition switch is turned to ON, the sensing and diagnostic module (SDM) will perform tests to diagnose critical malfunctions within itself. Upon passing these tests, Ignition 1 and deployment loop voltages are measured to ensure that they are within their respective normal voltage ranges. The SDM monitors the voltages at the driver low terminal (terminal 3) and the passenger low terminal (terminal 4) to detect shorts to ground in the deployment loops.

DTC 18 Will Set When

Diagnostic trouble code (DTC) 18 will be set if the voltage at the passenger low terminal falls below a specified value and Ignition 1 is within the normal operating voltage range.

This test is run during turn-on tests and every 100 milliseconds during continuous monitoring.

Action Taken

The SDM will turn on the AIRBAG indicator and set a DTC 18 and also a DTC 71.

DTC 18 Will Clear When

The malfunction is no longer occurring (has been repaired) and the SDM has been replaced. DTC 18 cannot be cleared with the scan tool.

Diagnostic Aids

Carefully inspect the wires in the passenger loop for cutting or chafing. If the wiring pigtail of the passenger airbag is damaged, the passenger airbag must be replaced.

Test Description

The number(s) below refer to step(s) on the diagnostic table.

3. See the first caution below.
4. See the first caution below.
5. See the third caution below.

DTC 18 - Passenger Deployment Loop Short to Ground

Caution: The SDM can maintain sufficient voltage to deploy the airbags for 10 minutes after the ignition is OFF and the fuse has been removed. If the airbags are not disconnected, service cannot begin until 10 minutes have passed after disconnecting power to the SDM.

Caution: Never measure the resistance of an inflator module with an ohmmeter. The ohmmeter battery could unexpectedly deploy the airbag which would created the possibility of severe injury and would require the replacement of otherwise useable components.

Caution: During service procedures, be very careful when handling the SDM. Never strike or jar the SDM. Never power up the SIR system when the SDM is not rigidly attached to the vehicle. All SDM mounting bolts must be carefully tightened, and the SDM arrow must be pointing toward the front of the vehicle to ensure proper operation of the SIR system. The SDM could be activated if it is powered when it is not rigidly attached to the vehicle, resulting in unexpected deployment and possible injury.

Important: A careful inspection of the circuits and components indicated on the DTC 18 chart is essential to ensure that the replacement SDM will not be damaged. When DTC 18 has been set, it is necessary to replace the SDM.

Step	Action	Value(s)	Yes	No
1	Perform the SIR Diagnostic System Check. Is the SIR Diagnostic System Check complete?	-	Go to *Step 2*	-
2	Visually inspect the wires to the passenger airbag, including the pigtail to the passenger airbag. Is there any evidence of rubbing, damage, or chafing?	-	Go to *Step 3*	Go to *Step 4*
3	1. Turn the ignition to LOCK and remove the key. 2. Temporarily disconnect the passenger airbag and the yellow clock spring connector on the steering column. 3. Replace any damaged wiring, terminals, or harnesses. The passenger airbag will require replacement if the pigtail wire harness has been damaged. 4. Replace the SDM. The arrow must be pointing to the front of the vehicle. Is the repair complete?	-	Go to „SIR Diagnostic System Check”	-
4	1. Turn the ignition OFF. 2. Disconnect the passenger airbag and the yellow clock spring connector on the steering column. 3. Disconnect the SDM. 4. Using a digital multimeter, measure resistance at the SDM harness connector between terminal 1 and terminal 6 (ground). ● Refer to „Diagnostic Illustration 4” in this section. Is the resistance equal to the specified value?	∞	Go to *Step 6*	Go to *Step 5*
5	1. Repair the short to ground between the passenger high circuit and ground. 2. Replace the SDM. The arrow must be pointing to the front of the vehicle. Is the repair complete?	-	Go to *Step 6*	-
6	1. Disconnect the SDM. 2. Measure the resistance at the SDM connector between terminal 4 and terminal 6 (ground). ● Refer to „Diagnostic Illustration 5” in this section. Is the resistance equal to the specified value?	∞	Go to *Step 8*	Go to *Step 7*

DTC 18 - Passenger Deployment Loop Short to Ground (Cont'd)

Step	Action	Value(s)	Yes	No
7	1. Repair the short to ground between the passenger low circuit and ground. 2. Replace the SDM. The arrow must be pointing to the front of the vehicle. Is the repair complete?	-	Go to „SIR Diagnostic System Check”	-
8	1. Replace the passenger airbag. 2. Replace the SDM. The arrow must be pointing to the front of the vehicle. Is the repair complete?	-	Go to „SIR Diagnostic System Check”	-

BLANK

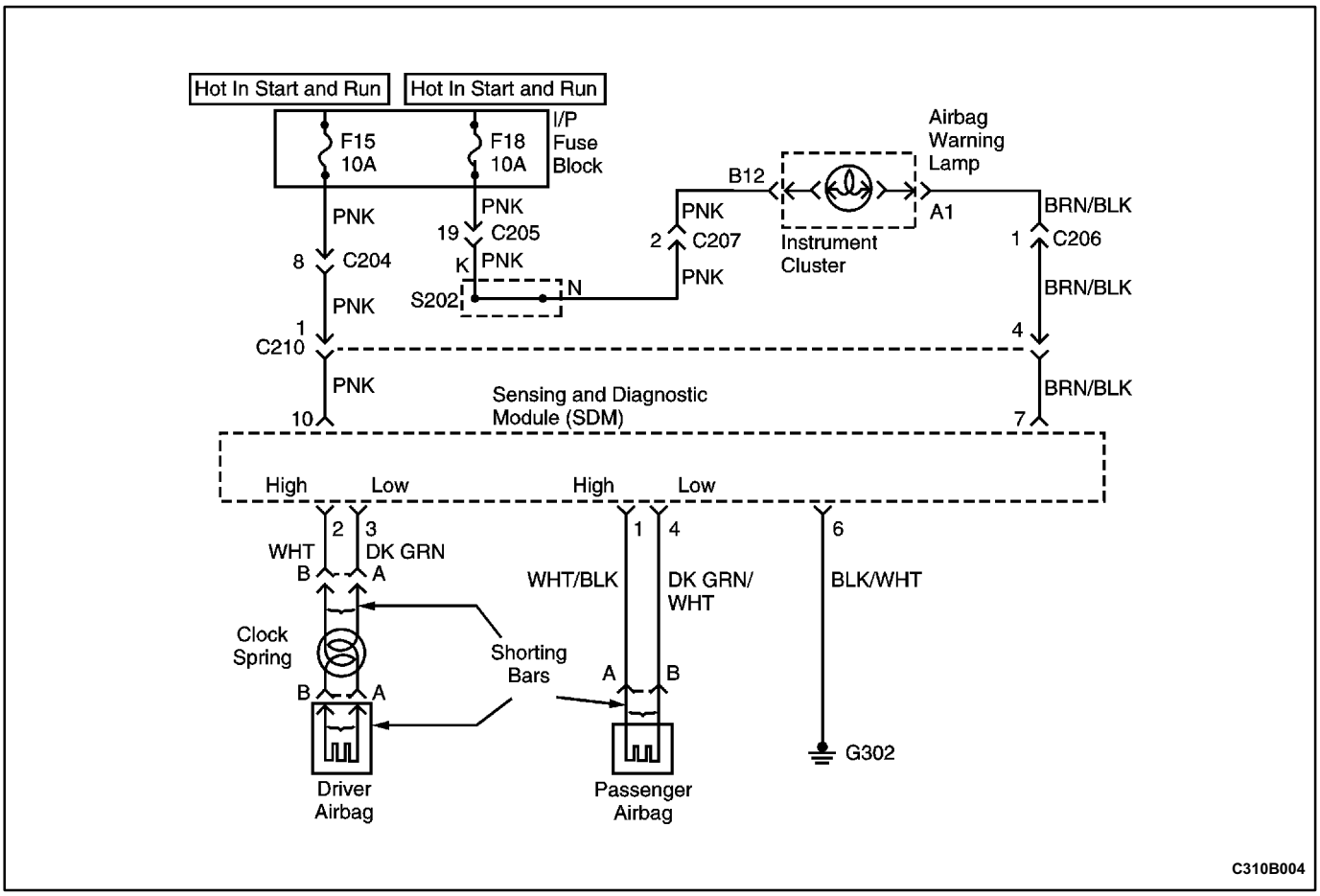

DIAGNOSTIC TROUBLE CODE (DTC) 19
PASSENGER DEPLOYMENT LOOP SHORT TO VOLTAGE

Circuit Description

When the ignition switch is turned to ON, the sensing and diagnostic module (SDM) will perform tests to diagnose critical malfunctions within itself. Upon passing these tests, Ignition 1 and deployment loop voltages are measured to ensure that they are within their respective normal voltage ranges. The SDM monitors the voltages at the driver low terminal (terminal 3) and the passenger low terminal (terminal 4) to detect shorts to voltage in the deployment loops.

DTC 19 Will Set When

Diagnostic trouble code 19 will be set if the voltage at the passenger low terminal rises above a specified value while the driver low terminal is below that value and Ignition 1 is within the normal operating voltage range. This test is run during turn-on tests and every 100 milliseconds during continuous monitoring.

Action Taken

The SDM will turn on the AIRBAG indicator and set a DTC 19.

DTC 19 Will Clear When

The voltage measured at the passenger low terminal is below a specified value for 500 milliseconds.

Diagnostic Aids

An intermittent condition is likely to be caused by a short to voltage in the passenger deployment loop. Carefully inspect the wires in the passenger loop for cutting or chafing. If the wiring pigtail of the passenger airbag is damaged, the passenger airbag must be replaced.

Test Description

The number(s) below refer to step(s) on the diagnostic table.

3. See the first caution below.
4. See the first caution and the important below.
8. See the cautions below.

DTC 19 - Passenger Deployment Loop Short to Voltage

Caution: The SDM can maintain sufficient voltage to deploy the airbags for 10 minutes after the ignition is OFF and the fuse has been removed. If the airbags are not disconnected, service cannot begin until 10 minutes have passed after disconnecting power to the SDM.

Caution: Never measure the resistance of an inflator module with an ohmmeter. The ohmmeter battery could unexpectedly deploy the airbag which would created the possibility of severe injury and would require the replacement of otherwise useable components.

Caution: During service procedures, be very careful when handling the SDM. Never strike or jar the SDM. Never power up the SIR system when the SDM is not rigidly attached to the vehicle. All SDM mounting bolts must be carefully tightened, and the SDM arrow must be pointing toward the front of the vehicle to ensure proper operation of the SIR system. The SDM could be activated if it is powered when it is not rigidly attached to the vehicle, resulting in unexpected deployment and possible injury.

Important: Replace any damaged SIR wires. Do not try to repair the wires because a high-resistance connection could make the airbags inoperative and set another DTC.

Step	Action	Value(s)	Yes	No
1	Perform the SIR Diagnostic System Check. Is the SIR Diagnostic System Check complete?	-	Go to *Step 2*	Go to „SIR Diagnostic System Check”
2	Visually inspect the wires to the passenger airbag, including the pigtail to the passenger airbag. Is there any evidence of rubbing, damage, or chafing?	-	Go to *Step 3*	Go to *Step 4*
3	1. Turn the ignition to LOCK and remove the key. 2. Disconnect the driver and passenger airbag modules. 3. Replace any damaged wiring, terminals, harnesses, or components. 4. Connect all SIR components and ensure all components are properly mounted. Is the repair complete?	-	Go to „SIR Diagnostic System Check”	-
4	1. Turn the ignition to LOCK and remove the key. 2. Disconnect the passenger airbag and the yellow clock spring connector on the steering column. 3. Disconnect the SDM. 4. Turn the ignition ON. 5. Using a digital multimeter, measure voltage at the SDM harness connector between terminal 1 and terminal 6 (ground). ● Refer to „Diagnostic Illustration 6” in this section. Is the voltage below the specified value?	1.0 V	Go to *Step 6*	Go to *Step 5*
5	1. Repair the short between the passenger high circuit and voltage. 2. Connect all SIR components, and ensure all components are properly mounted. Is the repair complete?	-	Go to „SIR Diagnostic System Check”	-
6	1. Disconnect the SDM. 2. Turn the ignition ON. 3. Use a digital multimeter to measure the voltage at the SDM connector between terminal 4 and terminal 6 (ground). ● Refer to „Diagnostic Illustration 7” in this section. Is the voltage above the specified value?	1.0 V	Go to *Step 7*	Go to *Step 8*

DTC 19 - Passenger Deployment Loop Short to Voltage (Cont'd)

Step	Action	Value(s)	Yes	No
7	Repair the short between the passenger low circuit and voltage. Is the repair complete?	-	Go to „SIR Diagnostic System Check”	-
8	Replace the SDM. Is the repair complete?	-	Go to „SIR Diagnostic System Check”	-

BLANK

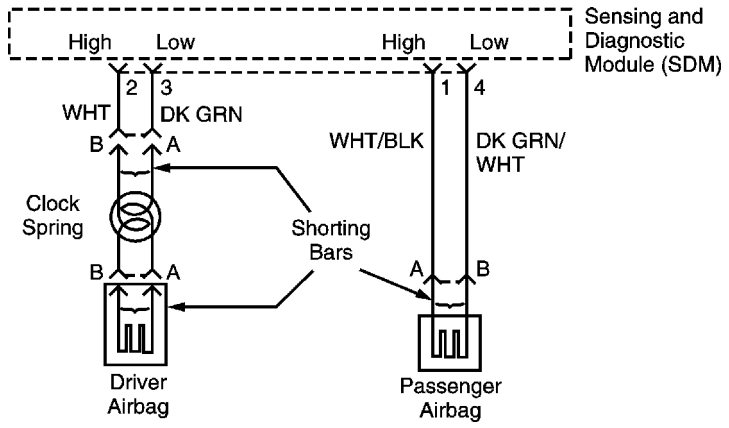

B110B005

DIAGNOSTIC TROUBLE CODE (DTC) 21
DRIVER DEPLOYMENT LOOP RESISTANCE HIGH

Circuit Description

When the ignition switch is turned to ON, the sensing and diagnostic module (SDM) will perform tests to diagnose critical malfunctions within itself. Upon passing these tests, Ignition 1 and deployment loop voltages are measured to ensure that they are within their respective normal voltage ranges. The SDM then proceeds with the resistance measurement test. Driver low terminal 3 is grounded through a current sink, and the driver current source is connected to the driver high terminal 2 to allow a known amount of current to flow. By monitoring the voltage difference between driver high and driver low, the SDM calculates the combined resistance of the driver inflator module, the clock spring, the harness wiring, and the connector terminal contacts.

DTC 21 Will Set When

The resistance of the driver deployment loop is above a specified value. The test is run once each ignition cycle during the resistance measurement test when

- No higher priority faults are detected when the ignition is turned ON.
- Ignition 1 voltage is above a specified value.

Action Taken

The SDM will turn on the AIRBAG indicator and set a Diagnostic Trouble Code (DTC) 21.

DTC 21 Will Clear When

The ignition switch is turned OFF or the scan tool CLEAR CODES command is received.

Diagnostic Aids

An intermittent condition is likely to be caused by a poor connection from the driver airbag to the clock spring, clock spring to steering column connector, or SDM terminals 2 or 3. The test for this DTC is run only while the AIRBAG indicator is performing the turn-on test. When a scan tool CLEAR CODES command is issued and the malfunction is still present, the DTC will not reappear until the next ignition cycle.

Test Description

The number(s) below refer to step(s) on the diagnostic table.

2. See the first caution below.

11. See the third caution below.

DTC 21 - Driver Deployment Loop Resistance High

Caution: The SDM can maintain sufficient voltage to deploy the airbags for 10 minutes after the ignition is OFF and the fuse has been removed. If the airbags are not disconnected, service cannot begin until 10 minutes have passed after disconnecting power to the SDM.

Caution: Never measure the resistance of an inflator module with an ohmmeter. The ohmmeter battery could unexpectedly deploy the airbag which would created the possibility of severe injury and would require the replacement of otherwise useable components.

Caution: During service procedures, be very careful when handling the SDM. Never strike or jar the SDM. Never power up the SIR system when the SDM is not rigidly attached to the vehicle. All SDM mounting bolts must be carefully tightened, and the SDM arrow must be pointing toward the front of the vehicle to ensure proper operation of the SIR system. The SDM could be activated if it is powered when it is not rigidly attached to the vehicle, resulting in unexpected deployment and possible injury.

Important: Be careful not to spread or deform the terminals of the clock spring connector.

Step	Action	Value(s)	Yes	No
1	Perform the SIR Diagnostic System Check. Is the SIR Diagnostic System Check complete?	-	Go to *Step 2*	-
2	1. Turn the ignition to LOCK and remove the key. 2. Disconnect the clock spring yellow connector located on the steering column. 3. Inspect the connector for damage or loose terminals or wires. Is a faulty component, connector, terminal, or wire detected?	-	Go to *Step 3*	Go to *Step 4*
3	1. Replace the faulty connector, component, terminal, or wire. 2. Connect all SIR system components. Is the repair complete?	-	Go to „SIR Diagnostic System Check”	-
4	Disconnect the SDM connector and check terminals 2 and 3 for loose terminals or wires. Is a problem found?	-	Go to *Step 5*	Go to *Step 6*
5	1. Replace the loose terminals or wires. 2. Connect all SIR system components. 3. Command CLEAR CODES with the scan tool. Is the repair complete?	-	Go to „SIR Diagnostic System Check”	-
6	1. Reconnect the SDM, but leave the yellow clock spring connector disconnected. 2. On the SDM side of the clock spring connector, connect a jumper between the two terminals. ● Refer to „Diagnostic Illustration 8” in this section. 3. Turn the ignition ON. Is DTC still present?	-	Go to *Step 7*	Go to *Step 8*
7	1. Turn the ignition to LOCK and remove the key. 2. Disconnect the yellow clock spring connector on the steering column. 3. Disconnect the SDM connector. 4. Repair the open circuit between the SDM terminals 2 or 3 and the clock spring connector on the steering column. Is the repair complete?	-	Go to „SIR Diagnostic System Check”	-

DTC 21 - Driver Deployment Loop Resistance High (Cont'd)

Step	Action	Value(s)	Yes	No
8	1. Turn the ignition to LOCK and remove the key. 2. Connect the clock spring connector on the steering column. 3. Disconnect the driver airbag connector. 4. Connect a jumper between the two terminals of the clock springtoairbag connector. ● Refer to „Diagnostic Illustration 9” in this section. 5. Turn the ignition ON. Is DTC 21 still present?	-	Go to *Step 9*	Go to *Step 10*
9	1. Turn the ignition to LOCK and remove the key. 2. Turn the steering wheel to the straightahead position. 3. Disconnect the yellow clock spring connector on the steering column. 4. Replace the clock spring. 5. Connect all SIR system components. Is the repair complete?	-	Go to „SIR Diagnostic System Check”	-
10	1. Turn the ignition to LOCK and remove the key. 2. Disconnect the yellow clock spring connector on the steering column. 3. Replace the driver airbag. 4. Connect all SIR system components. 5. Turn the ignition ON. Is DTC 21 still present?	-	Go to *Step 11*	System OK
11	1. Turn the ignition to LOCK and remove the key. 2. Disconnect the the yellow clock spring connector on the steering column. 3. Replace the SDM. The arrow must be pointing toward the front of the vehicle. 4. Connect all SIR system components, and ensure that all components are properly mounted. Is the repair complete?	-	Go to „SIR Diagnostic System Check”	-

BLANK

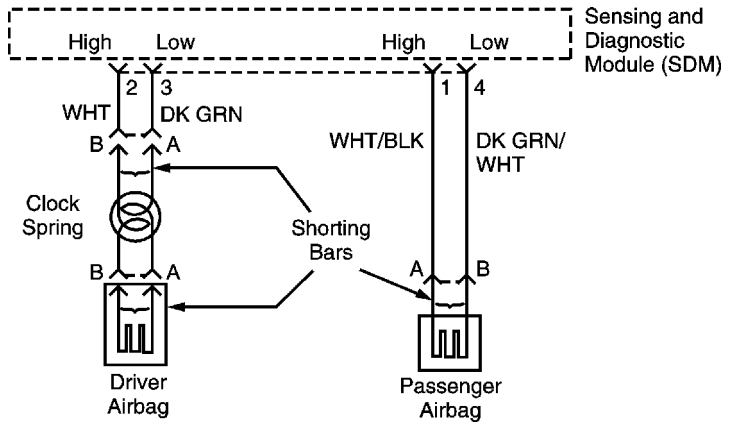

B110B005

DIAGNOSTIC TROUBLE CODE (DTC) 22
DRIVER DEPLOYMENT LOOP RESISTANCE LOW

Circuit Description

When the ignition switch is turned to ON, the sensing and diagnostic module (SDM) will perform tests to diagnose critical malfunctions within itself. Upon passing these tests, Ignition 1 and deployment loop voltages are measured to ensure that they are within their respective normal voltage ranges. The SDM then proceeds with the resistance measurement test. Driver low terminal 3 is grounded through a current sink, and the driver current source is connected to the driver high terminal 2 to allow a known amount of current to flow. By monitoring the voltage difference between driver high and driver low, the SDM calculates the combined resistance of the driver inflator module, the clock spring, the harness wiring, and the connector terminal contacts.

DTC 22 Will Set When

The resistance of the driver deployment loop is below a specified value. The test is run once each ignition cycle during the resistance measurement test when

- No higher priority faults are detected when the ignition is turned ON.
- Ignition 1 voltage is below a specified value.

Action Taken

The SDM will turn on the AIRBAG indicator and set a diagnostic trouble code (DTC) 22.

DTC 22 Will Clear When

The ignition switch is turned OFF or the scan tool CLEAR CODES command is received.

Diagnostic Aids

An intermittent condition is likely to be caused by a short between driver high and driver low or between driver high and passenger low. This condition could also be caused by a faulty clock spring or a faulty shorting bar in the clock spring steering column connector. The test for this DTC is run only while the AIRBAG indicator is performing the turnon test. When a scan tool CLEAR CODES command is issued and the malfunction is still present, the DTC will not reappear until the next ignition cycle.

Test Description

The number(s) below refer to step(s) on the diagnostic table.

3. See the first caution below.
15. See the third caution below.

DTC 22 - Driver Deployment Loop Resistance Low

Caution: The SDM can maintain sufficient voltage to deploy the airbags for 10 minutes after the ignition is OFF and the fuse has been removed. If the airbags are not disconnected, service cannot begin until 10 minutes have passed after disconnecting power to the SDM.

Caution: Never measure the resistance of an inflator module with an ohmmeter. The ohmmeter battery could unexpectedly deploy the airbag which would created the possibility of severe injury and would require the replacement of otherwise useable components.

Caution: During service procedures, be very careful when handling the SDM. Never strike or jar the SDM. Never power up the SIR system when the SDM is not rigidly attached to the vehicle. All SDM mounting bolts must be carefully tightened, and the SDM arrow must be pointing toward the front of the vehicle to ensure proper operation of the SIR system. The SDM could be activated if it is powered when it is not rigidly attached to the vehicle, resulting in unexpected deployment and possible injury.

Step	Action	Value(s)	Yes	No
1	Perform the SIR Diagnostic System Check. Is the SIR Diagnostic System Check complete?	-	Go to *Step 2*	-
2	Check for additional current DTCs. Is DTC 16 also current?	-	Go to *Step 3*	Go to *Step 4*
3	1. Turn the ignition to LOCK and remove the key. 2. Disconnect the passenger airbag and the yellow clock spring connector on the steering column. 3. Repair the short from driver high to passenger high. Is the repair complete?	-	Go to „SIR Diagnostic System Check”	-
4	1. Disconnect the clock spring yellow twoway connector located on the steering column. 2. Inspect the connector for damage. Is a faulty component, connector, terminal, or wire detected?	-	Go to *Step 5*	Go to *Step 6*
5	1. Replace the faulty connector, component, terminal or wire. 2. Connect all SIR system components. Is the repair complete?	-	Go to „SIR Diagnostic System Check”	-
6	Visually check the SDM connector terminals 2 and 3 for shorted terminals or wires. Is a problem found?	-	Go to *Step 7*	Go to *Step 8*
7	1. Replace the shorted terminals or wires. 2. Connect all SIR system components. Is the repair complete?	-	Go to „SIR Diagnostic System Check”	-
8	With the SDM disconnected, use an ohmmeter to check the SDM harness connector for a short between terminal 2 (driver high) and terminal 4 (passenger low). ● Refer to „Diagnostic Illustration 10” in this section. Is there a short between driver high and passenger low?	0 Ω	Go to *Step 9*	Go to *Step 10*
9	1. Repair the short circuit. 2. Connect all SIR system components. Is the repair complete?	-	Go to „SIR Diagnostic System Check”	-

DTC 22 - Driver Deployment Loop Resistance Low (Cont'd)

Step	Action	Value(s)	Yes	No
10	1. Remove the driver airbag. 2. Reconnect the yellow clock spring connector on the steering column. 3. At the SDM connector, use an ohmmeter to check for a short between the driver high (terminal 2) and driver low (terminal 3). ● Refer to „Diagnostic Illustration 11” in this section. Is there a short circuit between the driver high and driver low circuits?	0 Ω	Go to *Step 12*	Go to *Step 11*
11	1. Replace the driver airbag. 2. Connect all SIR system components. 3. Perform the Diagnostic System Check. Is DTC 22 still current?	-	Go to *Step 15*	System OK
12	1. Disconnect the yellow clock spring connector on the steering column. 2. At the SDM connector, use an ohmmeter to check for a short between the driver high (terminal 2) and driver low (terminal 3). ● Refer to „Diagnostic Illustration 11” in this section. Is there a short circuit between the driver high and driver low circuits?	0 Ω	Go to *Step 14*	Go to *Step 13*
13	1. Turn the steering wheel to the straight ahead position. 2. Disconnect the passenger airbag and the yellow clock spring connector on the steering column. 3. Replace the clock spring. 4. Connect all SIR system components. Is the repair complete?	-	Go to „SIR Diagnostic System Check”	-
14	Repair the shorted driver high and driver low wires between the SDM and the clock spring. Is the repair complete?	-	Go to „SIR Diagnostic System Check”	-
15	1. Replace the SDM. The arrow must be pointing toward the front of the vehicle. 2. Connect all SIR system components, and ensure that all components are properly mounted. Is the repair complete?	-	Go to „SIR Diagnostic System Check”	-

BLANK

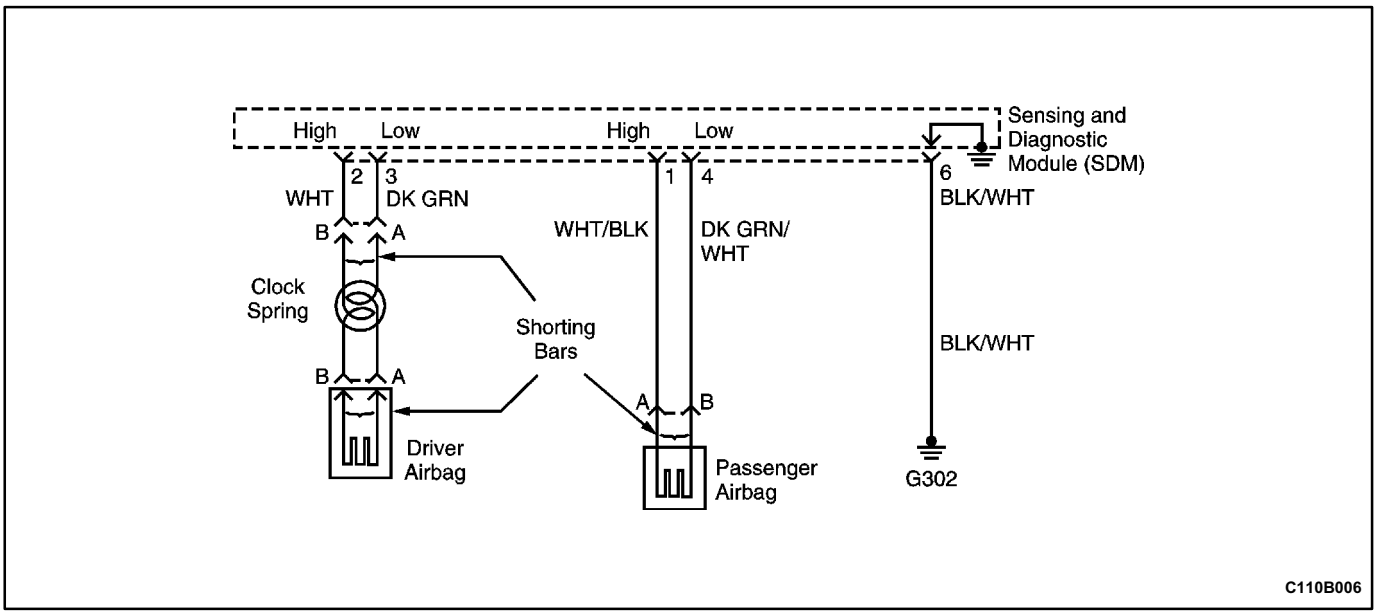

DIAGNOSTIC TROUBLE CODE (DTC) 24
DRIVER DEPLOYMENT LOOP SHORT TO GROUND

Circuit Description

When the ignition switch is turned to ON, the sensing and diagnostic module (SDM) will perform tests to diagnose critical malfunctions within itself. Upon passing these tests, Ignition 1 and deployment loop voltages are measured to ensure that they are within their respective normal voltage ranges. The SDM monitors the voltages at the driver low (terminal 3) and passenger low (terminal 4) to detect shorts to ground in the deployment loops.

DTC 24 Will Set When

DTC 24 will be set if the voltage at driver low falls below a specified value, and Ignition 1 is within the normal operating voltage range.

This test is run during turn-on tests and every 100 milliseconds during continuous monitoring.

Action Taken

The SDM will turn on the AIRBAG indicator and set a diagnostic trouble code 24. DTC 71 will also set.

DTC 24 Will Clear When

The malfunction is no longer occurring (has been repaired) and the SDM has been replaced. DTC 24 cannot be cleared with the scan tool.

Diagnostic Aids

Carefully inspect the wires in the driver loop for cutting or chafing.

Test Description

The number(s) below refer to step(s) on the diagnostic table.

2. See the first caution below.
11. See the third caution below.

DTC 24 - Driver Deployment Loop Short to Ground

Caution: The SDM can maintain sufficient voltage to deploy the airbags for 10 minutes after the ignition is OFF and the fuse has been removed. If the airbags are not disconnected, service cannot begin until 10 minutes have passed after disconnecting power to the SDM.

Caution: Never measure the resistance of an inflator module with an ohmmeter. The ohmmeter battery could unexpectedly deploy the airbag which would created the possibility of severe injury and would require the replacement of otherwise useable components.

Caution: During service procedures, be very careful when handling the SDM. Never strike or jar the SDM. Never power up the SIR system when the SDM is not rigidly attached to the vehicle. All SDM mounting bolts must be carefully tightened, and the SDM arrow must be pointing toward the front of the vehicle to ensure proper operation of the SIR System. The SDM could be activated if it is powered when it is not rigidly attached to the vehicle, resulting in unexpected deployment and possible injury.

Important: A careful inspection of the circuits and components indicated on the DTC 24 chart is essential to ensure that the replacement SDM will not be damaged. When DTC 24 has been set, it is necessary to replace the SDM.

Step	Action	Value(s)	Yes	No
1	Perform the SIR Diagnostic System Check. Is the SIR Diagnostic System Check complete?	-	Go to *Step 2*	-
2	1. Turn the ignition to LOCK and remove the key. 2. Disconnect the driver and passenger airbags, or wait 10 minutes before proceeding. 3. Visually inspect the driver airbag circuit and connectors, especially at the SDM. Is there any evidence of rubbing, damage, or chafing?	-	Go to *Step 3*	Go to *Step 4*
3	1. Repair the damaged wires or connectors. 2. Replace the SDM. The arrow must be pointing toward the front of the vehicle. 3. Connect all SIR system components. Is the repair complete?	-	Go to „SIR Diagnostic System Check”	-
4	1. Disconnect the yellow clock spring connector on the steering column if it was not previously disconnected. 2. At the SDM connector, use an ohmmeter to check for a short between the driver high (terminal 2) and terminal 6 (ground). ● Refer to „Diagnostic Illustration 12” in this section. Is the resistance equal to the specified value?	∞	Go to *Step 6*	Go to *Step 5*
5	1. Repair the short to ground in the driver high circuit between the clock spring connector and the SDM. 2. Replace the SDM. The arrow must be pointing toward the front of the vehicle. 3. Connect all SIR system components. Is the repair complete?	-	Go to „SIR Diagnostic System Check”	-
6	Measure the resistance at the SDM connector between terminal 3 and terminal 6 (ground). ● Refer to „Diagnostic Illustration 13” in this section. Is the resistance equal to the specified value?	∞	Go to *Step 8*	Go to *Step 7*

DTC 24 - Driver Deployment Loop Short to Ground (Cont'd)

Step	Action	Value(s)	Yes	No
7	1. Repair the short to ground in the driver low circuit between the SDM and the clock spring connector. 2. Replace the SDM. The arrow must be pointing toward the front of the vehicle. 3. Connect all SIR system components. Is the repair complete?	-	Go to „SIR Diagnostic System Check”	-
8	1. Temporarily remove the driver airbag. 2. Reconnect the yellow clock spring connector on the steering column. 3. At the SDM connector, use an ohmmeter to check for a short between the driver high (terminal 2) and terminal 6 (ground). ● Refer to „Diagnostic Illustration 12” in this section. Is the resistance equal to the specified value?	∞	Go to *Step 10*	Go to *Step 9*
9	1. Turn the ignition to LOCK and remove the key. 2. Turn the steering wheel to the straightahead position. 3. Disconnect the yellow clock spring connector on the steering column. 4. Replace the clock spring. 5. Replace the SDM. The arrow must be pointing toward the front of the vehicle. 6. Connect all SIR system components. Is the repair complete?	-	Go to „SIR Diagnostic System Check”	-
10	Measure the resistance at the SDM connector between terminal 3 and terminal 6 (ground). ● Refer to „Diagnostic Illustration 13” in this section. Is the resistance equal to the specified value?	∞	Go to *Step 11*	Go to *Step 9*
11	1. Disconnect the yellow clock spring connector on the steering column. 2. Replace the driver airbag. 3. Replace the SDM. The arrow must be pointing toward the front of the vehicle. 4. Connect all SIR system components. Is the repair complete?	-	Go to „SIR Diagnostic System Check”	-

BLANK

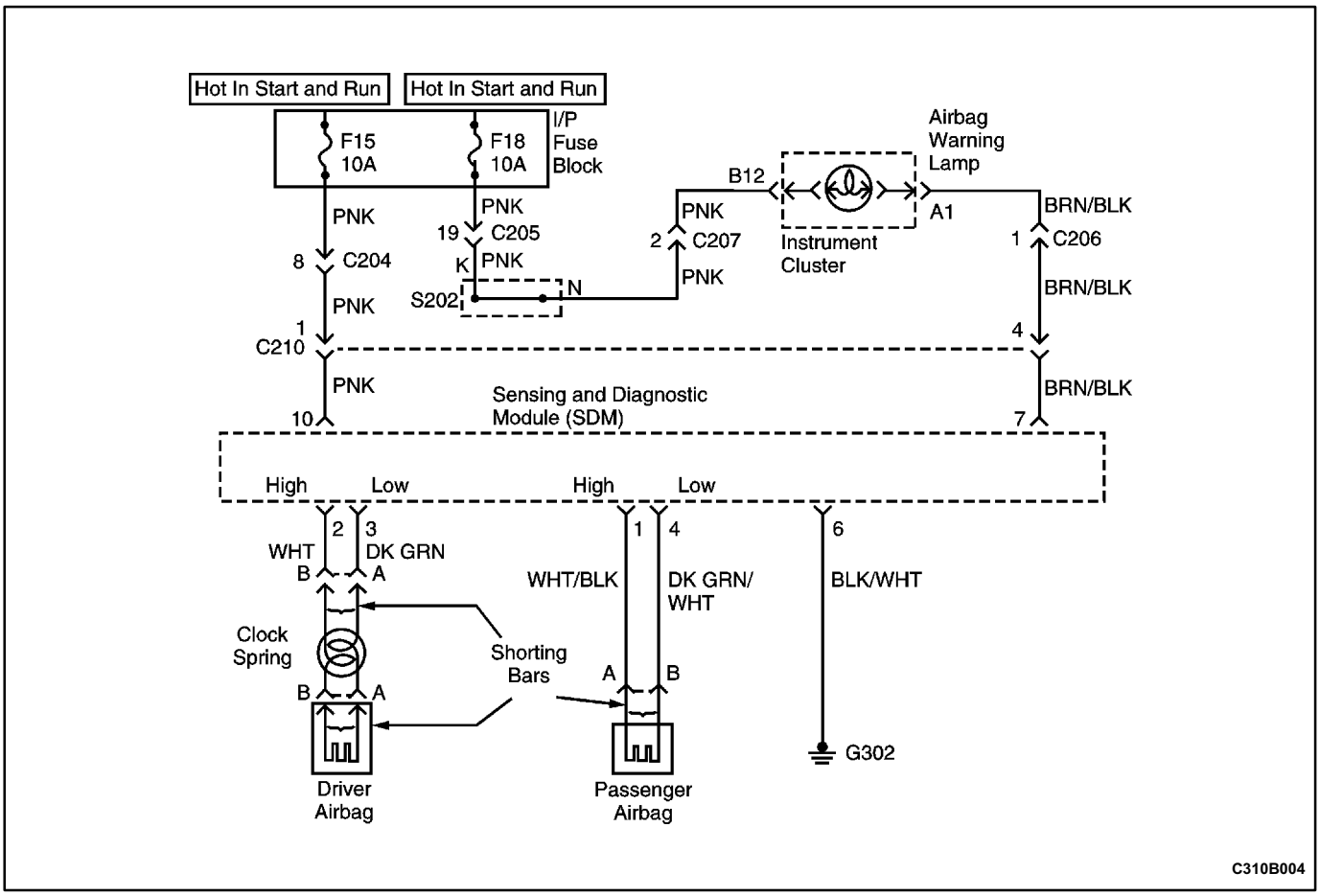

DIAGNOSTIC TROUBLE CODE (DTC) 25
DRIVER DEPLOYMENT LOOP SHORT TO VOLTAGE

Circuit Description

When the ignition switch is turned to ON, the sensing and diagnostic module will perform tests to diagnose critical malfunctions within itself. Upon passing these tests, Ignition 1 and deployment loop voltages are measured to ensure that they are within their respective normal voltage ranges. The SDM monitors the voltages at the driver low (terminal 3) and passenger low (terminal 4) to detect shorts to voltage in the deployment loops.

DTC 25 Will Set When

DTC 25 will be set if the driver low is above 5 volts for 500 milliseconds while the passenger low is below 5 volts, and Ignition 1 is within the normal operating voltage range. This test is run during turn-on tests and every 100 milliseconds during continuous monitoring.

Action Taken

The SDM will turn on the AIRBAG indicator and set a diagnostic trouble code (DTC) 25.

DTC 25 Will Clear When

The voltage measured at driver low is below 4 volts for 500 milliseconds or the ignition is turned OFF.

Diagnostic Aids

Carefully inspect the wires in the driver loop for cutting or chafing.

Test Description

The number(s) below refer to step(s) on the diagnostic table.

2. See the first caution below.
11. See the third caution below.

DTC 25 - Driver Deployment Loop Short to Voltage

Caution: The SDM can maintain sufficient voltage to deploy the airbags for 10 minutes after the ignition is OFF and the fuse has been removed. If the airbags are not disconnected, service cannot begin until 10 minutes have passed after disconnecting power to the SDM.

Caution: Never measure the resistance of an inflator module with an ohmmeter. The ohmmeter battery could unexpectedly deploy the airbag which would created the possibility of severe injury and would require the replacement of otherwise useable components.

Caution: During service procedures, be very careful when handling the SDM. Never strike or jar the SDM. Never power up the SIR system when the SDM is not rigidly attached to the vehicle. All SDM mounting bolts must be carefully tightened, and the SDM arrow must be pointing toward the front of the vehicle to ensure proper operation of the SIR system. The SDM could be activated if it is powered when it is not rigidly attached to the vehicle, resulting in unexpected deployment and possible injury.

Step	Action	Value(s)	Yes	No
1	Perform the SIR Diagnostic System Check. Is the SIR Diagnostic System Check complete?	-	Go to *Step 2*	-
2	1. Turn the ignition to LOCK and remove the key. 2. Disconnect the driver and passenger airbags, or wait 10 minutes before proceeding. 3. Visually inspect the driver airbag circuit and connectors, especially at the SDM. Is there any evidence of rubbing, damage, or chafing?	-	Go to *Step 3*	Go to *Step 4*
3	1. Repair the damaged wires or connectors. 2. Connect all SIR system components. Is the repair complete?	-	Go to „SIR Diagnostic System Check”	-
4	1. Disconnect the yellow clock spring connector on the steering column if it was not previously disconnected. 2. At the SDM connector, use an multimeter to check voltage between the driver high (terminal 2) and terminal 6 (ground). ● Refer to „Diagnostic Illustration 14” in this section. Is the voltage greater than the specified value?	5 V	Go to *Step 5*	Go to *Step 6*
5	1. Repair the short to voltage in the driver high circuit between the clock spring connector and the SDM. 2. Connect all SIR system components. Is the repair complete?	-	Go to „SIR Diagnostic System Check”	-
6	Measure the voltage at the SDM connector between terminal 3 and terminal 6 (ground). ● Refer to „Diagnostic Illustration 15” in this section. Is the voltage greater than the specified value?	5 V	Go to *Step 7*	Go to *Step 8*
7	1. Repair the short to voltage in the driver low circuit between the SDM and the clock spring connector. 2. Connect all SIR system components. Is the repair complete?	-	Go to „SIR Diagnostic System Check”	-

DTC 25 - Driver Deployment Loop Short to Voltage (Cont'd)

Step	Action	Value(s)	Yes	No
8	1. Temporarily remove the driver airbag. 2. Reconnect the yellow clock spring connector on the steering column. 3. At the SDM connector, use a multimeter to check voltage between the driver high (terminal 2) and terminal 6 (ground). ● Refer to „Diagnostic Illustration 14” in this section. Is the voltage greater than the specified value?	5 V	Go to *Step 9*	Go to *Step 10*
9	1. Turn the ignition to LOCK and remove the key. 2. Turn the steering wheel to the straight ahead position. 3. Disconnect the yellow clock spring connector on the steering column. 4. Replace the clock spring. 5. Connect all SIR system components. Is the repair complete?	-	Go to „SIR Diagnostic System Check”	-
10	Measure the voltage at the SDM connector between terminal 3 and terminal 6 (ground). ● Refer to „Diagnostic Illustration 15” in this section. Is the voltage greater than the specified value?	5 V	Go to *Step 9*	Go to *Step 11*
11	1. Disconnect the yellow clock spring connector on the steering column. 2. Replace the SDM. The arrow must be pointing toward the front of the vehicle. 3. Connect all SIR system components. Is the repair complete?	-	Go to „SIR Diagnostic System Check”	-

BLANK

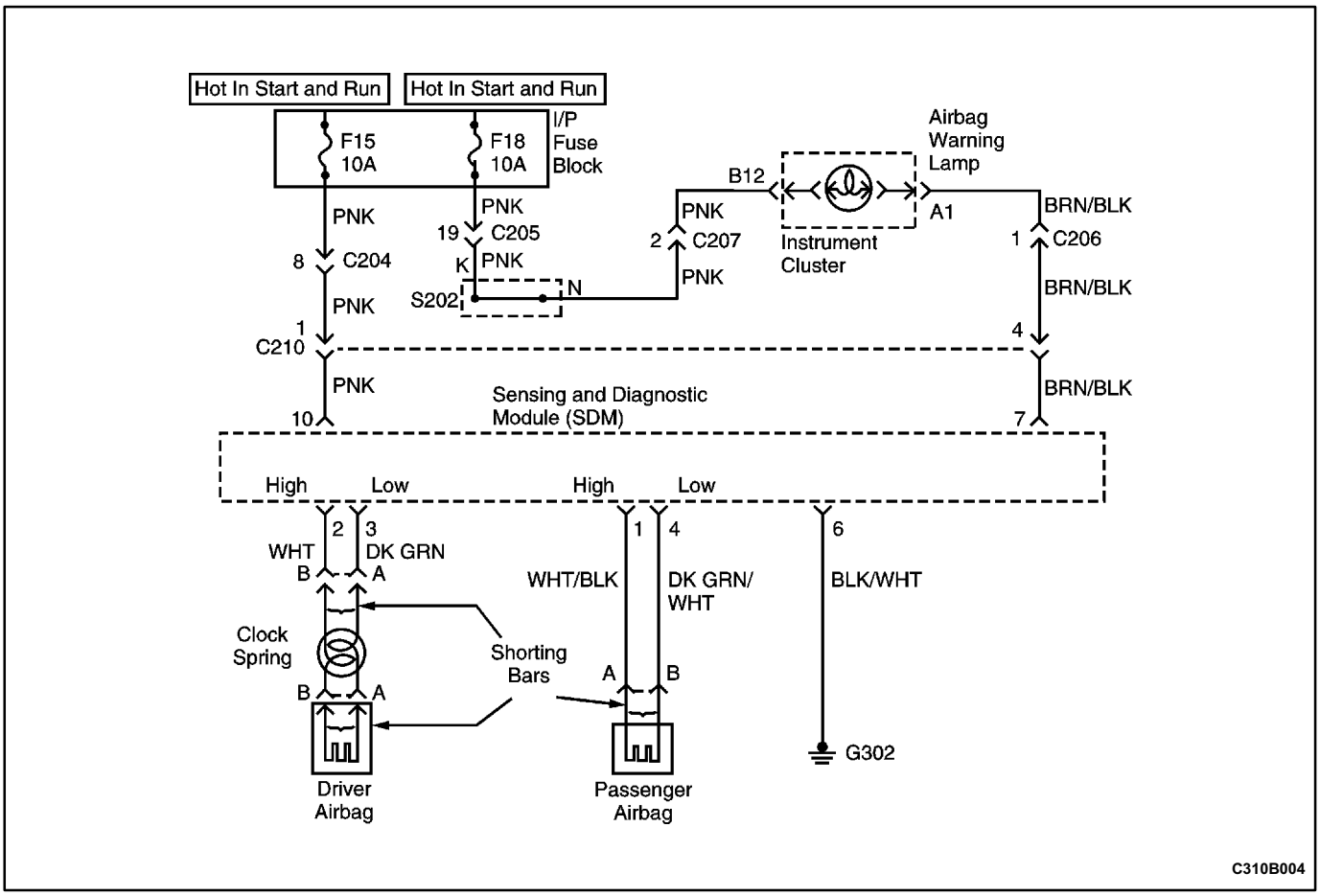

DIAGNOSTIC TROUBLE CODE (DTC) 26
DRIVER DEPLOYMENT LOOP OPEN

Circuit Description

When the ignition switch is turned to ON, the sensing and diagnostic module (SDM) will perform tests to diagnose critical malfunctions within itself. Upon passing these tests, Ignition 1 and deployment loop voltages are measured to ensure that they are within their respective normal voltage ranges. The SDM then proceeds with the resistance measurement test. Driver low terminal 4 is grounded through a current sink, and the driver current source is connected to the driver high terminal to allow a known amount of current to flow. By monitoring the voltage difference between driver high and driver low, the SDM calculates the combined resistance of the driver inflator module, the harness wiring, and the connector terminal contacts.

DTC 26 Will Set When

The resistance of the driver deployment loop is above a specified value for 500 milliseconds. The resistance is monitored during the deployment loop continuity test and continuous monitoring.

Action Taken

The SDM will turn on the AIRBAG indicator and set a diagnostic trouble code (DTC) 26.

DTC 26 Will Clear When

The voltage measured at driver low is below a specified value for 500 milliseconds or the ignition is turned OFF.

Diagnostic Aids

An intermittent condition is likely to be caused by a poor connection, either at the driver airbag or clock spring connectors or SDM terminals 2 and 3. An open wire in the driver deployment loop will also set DTC 26. To test for a faulty SIR clock spring, clear the DTCs, then turn the steering wheel back and forth with the ignition switch ON. If the AIRBAG indicator comes on and DTC 26 has set again, it is likely that the clock spring is faulty.

Test Description

The number(s) below refer to step(s) on the diagnostic table.

4. This test establishes that the problem is either in the clock spring or the driver airbag.
7. See the important below.
10. See the first caution below.
14. See the third caution below.

DTC 26 - Driver Deployment Loop Open

Caution: The SDM can maintain sufficient voltage to deploy the airbags for 10 minutes after the ignition is OFF and the fuse has been removed. If the airbags are not disconnected, service cannot begin until 10 minutes have passed after disconnecting power to the SDM.

Caution: Never measure the resistance of an inflator module with an ohmmeter. The ohmmeter battery could unexpectedly deploy the airbag which would created the possibility of severe injury and would require the replacement of otherwise useable components.

Caution: During service procedures, be very careful when handling the SDM. Never strike or jar the SDM. Never power up the SIR system when the SDM is not rigidly attached to the vehicle. All SDM mounting bolts must be carefully tightened, and the SDM arrow must be pointing toward the front of the vehicle to ensure proper operation of the SIR system. The SDM could be activated if it is powered when it is not rigidly attached to the vehicle, resulting in unexpected deployment and possible injury.

Important: Avoid deforming the terminals of the clock spring to airbag connector.

Step	Action	Value(s)	Yes	No
1	Perform the SIR Diagnostic System Check. Is the SIR Diagnostic System Check complete?	-	Go to *Step 2*	-
2	1. Turn the ignition to LOCK and remove the key. 2. Make sure the clock spring yellow two-way connector (located on the steering column) is seated properly. Is the yellow clock spring connector seated properly?	-	Go to *Step 4*	Go to *Step 3*
3	1. Seat the clock spring yellow two-way connector. 2. Make sure all SIR system components are reconnected and all components are properly mounted. 3. Turn the ignition ON. Is DTC 26 still current?	-	Go to *Step 4*	Go to „SIR Diagnostic System Check”
4	1. Turn the ignition to LOCK and remove the key. 2. Disconnect the yellow clock spring connector on the steering column. 3. Connect a jumper between the terminals on the SDM side of the clock spring connector. ● Refer to „Diagnostic Illustration 8” in this section. 4. Turn the ignition ON. Is DTC 26 still current?	-	Go to *Step 9*	Go to *Step 5*
5	1. Turn the ignition to LOCK and remove the key. 2. Examine the connection at the driver airbag. Is the driver airbag connector seated properly?	-	Go to *Step 7*	Go to *Step 6*
6	1. Properly seat the connector to the driver airbag. 2. Reconnect the yellow clock spring connector on the lower steering column. 3. Turn the ignition ON. Is DTC 26 still current?	-	Go to *Step 7*	Go to „SIR Diagnostic System Check”
7	1. Turn the ignition to LOCK and remove the key. 2. Temporarily remove the driver airbag. 3. Connect a jumper between the terminals of the clock spring to driver airbag connector. ● Refer to „Diagnostic Illustration 9” in this section. 4. Turn the ignition ON. 5. Move the steering wheel back and forth while watching the AIRBAG indicator. Did the AIRBAG indicator turn on with DTC 26 still current?	-	Go to *Step 9*	Go to *Step 8*

DTC 26 - Driver Deployment Loop Open (Cont'd)

Step	Action	Value(s)	Yes	No
8	1. Turn the ignition to LOCK and remove the key. 2. Disconnect the yellow clock spring connector on the steering column. 3. Replace the driver airbag. 4. Connect all SIR system components and the scan tool. 5. Turn the ignition ON. Is DTC 26 still current?	-	Go to *Step 1*	Go to „SIR Diagnostic System Check”
9	1. Turn the ignition to LOCK and remove the key. 2. Turn the steering wheel to the straight-ahead position. 3. Disconnect the yellow clock spring connector on the steering column. 4. Replace the clock spring. 5. Connect all SIR system components and the scan tool. 6. Turn the ignition ON. Is DTC 26 still current?	-	Go to *Step 1*	Go to *Step 10*
10	1. Turn the ignition to LOCK and remove the key. 2. Disconnect the passenger airbag and the yellow clock spring connector on the steering column. 3. Disconnect the SDM connector. 4. Examine the pins and terminals at the SDM terminals 2 and 3. Are there any loose wires or backed out terminals?	-	Go to *Step 11*	Go to *Step 12*
11	1. Repair any loose wires or damaged pins or terminals. 2. Connect all SIR system components and the scan tool. 3. Turn the ignition ON. Is the repair complete?	-	Go to „SIR Diagnostic System Check”	-
12	Use an ohmmeter to check both driver deployment wires for an open circuit between the SDM connector (terminals 2 and 3) and the clock spring connector. ● Refer to „Diagnostic Illustration 16” in this section. Does the ohmmeter show the specified value?	∞	Go to *Step 13*	Go to *Step 14*
13	1. Replace any open wires between the SDM and the clock spring. 2. Connect all SIR system components and the scan tool. 3. Turn the ignition ON. Is DTC 26 still current?	-	Go to *Step 14*	-
14	1. Turn the ignition to LOCK and remove the key. 2. Disconnect the passenger airbag and the yellow clock spring connector on the steering column. 3. Replace the SDM. The arrow must be pointing toward the front of the vehicle. 4. Connect all SIR system components, and ensure that all components are properly mounted. 5. Command CLEAR CODES with the scan tool. Is the repair complete?	-	Go to „SIR Diagnostic System Check”	-

BLANK

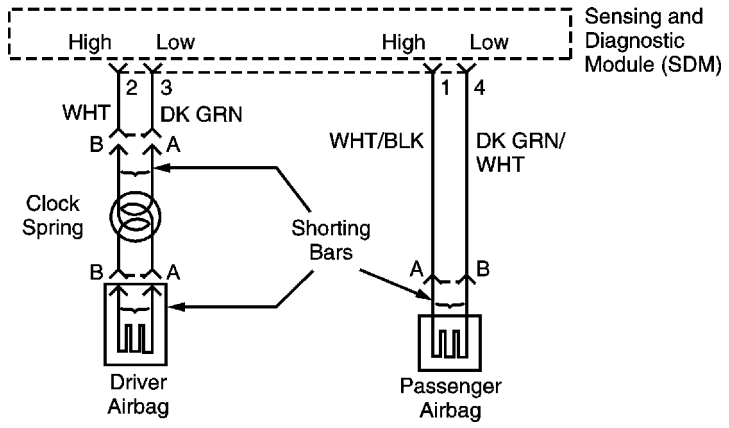

B110B005

DIAGNOSTIC TROUBLE CODE (DTC) 51 DEPLOYMENT COMMANDED

Circuit Description

The sensing and diagnostic module (SDM) contains a sensing device which converts vehicle velocity changes to an electrical signal. The electrical signal generated is processed by the SDM and then compared to a value stored in memory. When the generated signal exceeds the stored value, additional signal processing is performed and the generated signals are compared to signals stored in memory. When two of the generated signals exceed the stored values, the SDM will cause sufficient current to flow through the inflator modules to deploy the air bags and cause DTC 51 to be set.

DTC 51 Will Set When

The SDM detects a frontal crash within 30 degrees of the centerline of the vehicle, of sufficient force to warrant deployment of the air bags.

Action Taken

The SDM turns on the AIRBAG indicator, records crash data, and sets a DTC 51.

DTC 51 Will Clear When

The SDM is replaced. This code cannot be cleared with a scan tool.

Test Description

The number(s) below refer to step(s) on the diagnostic table.

2. If there is no evidence of impact, DTC may have been set falsely.
5. See the cautions below.

DTC 51 - Deployment Commanded

Caution: The SDM can maintain sufficient voltage to deploy the airbags for 10 minutes after the ignition is OFF and the fuse has been removed. If the airbags are not disconnected, service cannot begin until 10 minutes have passed after disconnecting power to the SDM.

Caution: During service procedures, be very careful when handling the SDM. Never strike or jar the SDM. Never power up the SIR system when the SDM is not rigidly attached to the vehicle. All SDM mounting bolts must be carefully tightened, and the SDM arrow must be pointing toward the front of the vehicle to ensure proper operation of the SIR system. The SDM could be activated if it is powered when if is not rigidly attached to the vehicle, resulting in unexpected deployment and possible injury.

Step	Action	Value(s)	Yes	No
1	Perform the SIR Diagnostic System Check. Is the SIR Diagnostic System Check complete?	-	Go to *Step 2*	-
2	1. Turn the ignition to LOCK and remove the key. 2. Check for deployed airbags. Have the airbags deployed?	-	Go to *Step 3*	Go to *Step 4*
3	1. Remove the airbag fuse. 2. Turn the steering wheel to the straightāhead position. 3. Perform inspections and replace components as directed in „Repairs and Inspections Required After An Accident” in this section. 4. Replace the SDM. The arrow must be pointing toward the front of the vehicle. 5. Connect all SIR system components, and ensure that all components are properly mounted. 6. Reinstall the airbag fuse. 7. Use a scan tool to clear SIR trouble codes. Are the repairs complete?	-	Go to „SIR Diagnostic System Check”	-
4	Inspect the front of the vehicle and undercarriage for signs of impact. Are there any signs of impact?	-	Go to *Step 3*	Go to *Step 5*
5	1. Turn the ignition to LOCK and remove the key. 2. Disconnect the passenger airbag and the yellow clock spring connector on the steering column. 3. Replace the SDM. The arrow must be pointing toward the front of the vehicle. 4. Connect all SIR system components, and ensure that all components are properly mounted. Are the repairs complete?	-	Go to „SIR Diagnostic System Check”	-

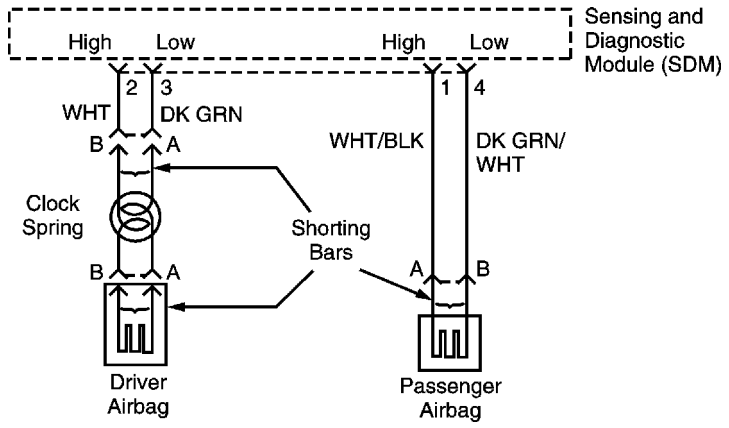

B110B005

DIAGNOSTIC TROUBLE CODE (DTC) 53
DEPLOYMENT COMMANDED WITH LOOP FAULTS PRESENT

Circuit Description

The sensing and diagnostic module (SDM) contains a sensing device which converts vehicle velocity changes to an electrical signal. The electrical signal generated is processed by the SDM and then compared to a value stored in memory. When the generated signal exceeds the stored value, additional signal processing is performed and the generated signals are compared to signals stored in memory. When two of the generated signals exceed the stored values, the SDM will cause sufficient current to flow through the inflator modules to deploy the air bags. DTC 53 is set instead of DTC 51 when a deployment occurs while an inflator circuit fault is present that could possibly result in a no deployment situation in one or both inflator modules.

DTC 53 Will Set When

- The SDM detects a frontal crash within to 30 degrees from the centerline of the vehicle, of sufficient force to warrant deployment of the air bags.
- An inflator circuit fault is present.

Action Taken

The SDM turns ON the AIRBAG indicator, records crash data, and sets a DTC 53.

DTC 53 Will Clear When

The SDM is replaced. This code cannot be cleared with a scan tool.

Test Description

The number(s) below refer to step(s) on the diagnostic table.

2. If there is no evidence of impact, DTC may have been set falsely.
5. See the cautions below.

DTC 53 Deployment Commanded With Loop Faults Present

Caution: The SDM can maintain sufficient voltage to deploy the airbags for 10 minutes after the ignition is OFF and the fuse has been removed. If the airbags are not disconnected, service cannot begin until 10 minutes have passed after disconnecting power to the SDM.

Caution: During service procedures, be very careful when handling the SDM. Never strike or jar the SDM. Never power up the SIR system when the SDM is not rigidly attached to the vehicle. All SDM mounting bolts must be carefully tightened, and the SDM arrow must be pointing toward the front of the vehicle to ensure proper operation of the SIR system. The SDM could be activated if it is powered when it is not rigidly attached to the vehicle, resulting in unexpected deployment and possible injury.

Step	Action	Value(s)	Yes	No
1	Perform the SIR Diagnostic System Check. Is the SIR Diagnostic System Check complete?	-	Go to *Step 2*	-
2	1. Turn the ignition to LOCK and remove the key. 2. Check for deployed airbags. Have the airbags deployed?	-	Go to *Step 3*	Go to *Step 4*
3	1. Remove the airbag fuse. 2. Turn the steering wheel to the straightāhead position. 3. Perform inspections and replace components as directed in „Repairs and Inspections Required After an Accident” in this section. 4. Replace the SDM. The arrow must be pointing toward the front of the vehicle. 5. Connect all SIR system components, and ensure that all components are properly mounted. 6. Reinstall the airbag fuse. 7. Use a scan tool to clear SIR trouble codes. Are the repairs complete?	-	Go to „SIR Diagnostic System Check”	-
4	Inspect the front of the vehicle and undercarriage for signs of impact. Are there any signs of impact?	-	Go to *Step 3*	Go to *Step 5*
5	1. Turn the ignition to LOCK and remove the key. 2. Disconnect the passenger airbag and the yellow clock spring connector on the steering column. 3. Replace the SDM. The arrow must be pointing toward the front of the vehicle. 4. Connect all SIR system components, and ensure that all components are properly mounted. Are the repairs complete?	-	Go to „SIR Diagnostic System Check”	-

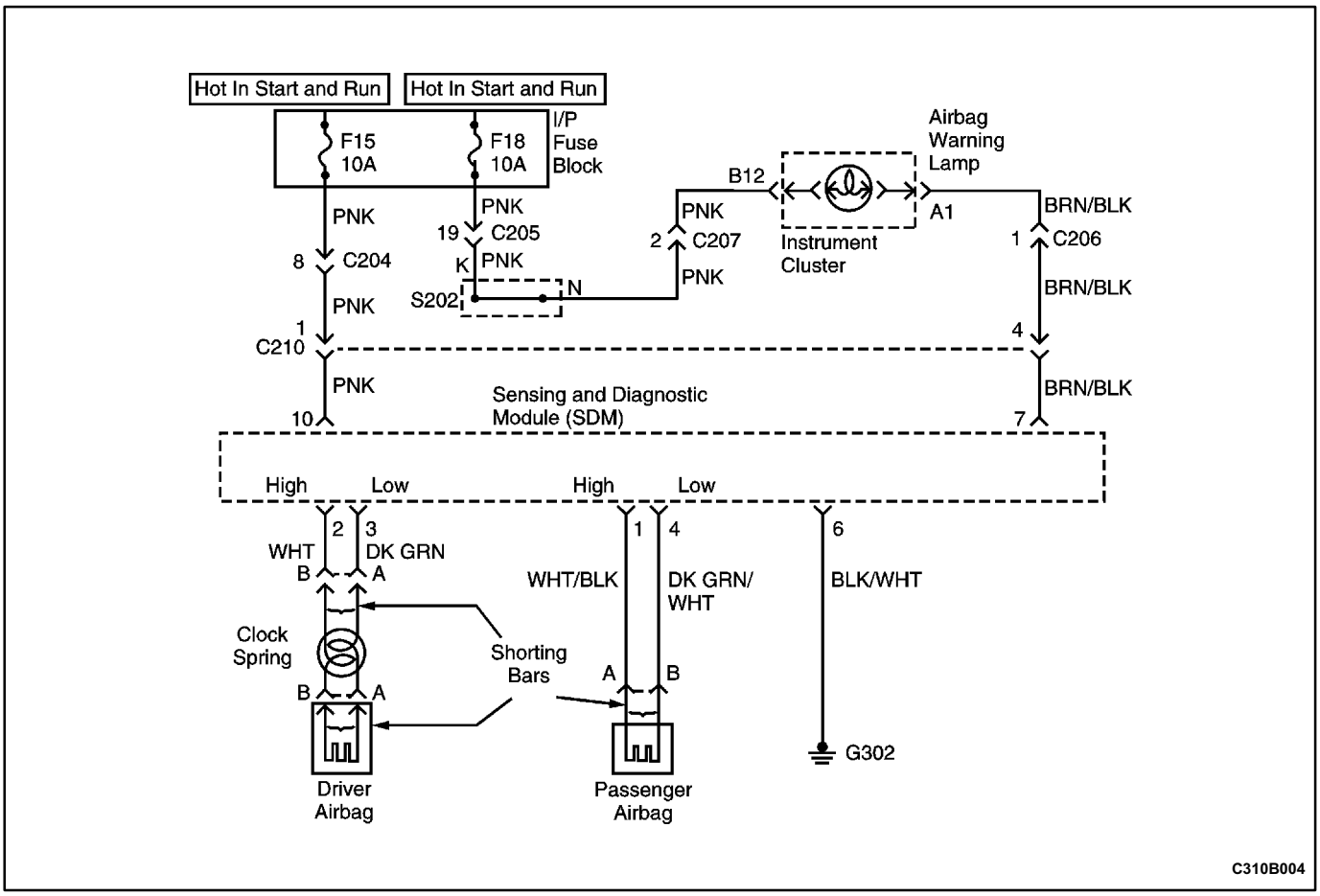

DIAGNOSTIC TROUBLE CODE (DTC) 61
AIRBAG WARNING LAMP CIRCUIT OPEN

Circuit Description

When the ignition switch is first turned ON, Ignition 1 voltage is applied to the indicator lamp and also to the sensing and diagnostic module (SDM) input terminal 10. The SDM responds by flashing the instrument cluster AIRBAG indicator seven times. If the SDM cannot detect voltage on the indicator circuit, a DTC 61 will be set. The SDM also attempts to turn on the AIRBAG indicator, but the indicator will not turn on if inputs have been correctly processed.

DTC 61 Will Set When

Either during the turn on test or during continuous monitoring, the SDM fails to detect voltage at terminal 7, the input terminal for the AIRBAG indicator.

Action Taken

The SDM attempts to turn on the AIRBAG indicator, and it sets a DTC 61.

DTC 61 Will Clear When

The ignition switch is turned OFF or the problem is repaired.

Test Description

The number(s) below refer to step(s) on the diagnostic table.

12. See the first caution below.
14. See the cautions below.

DTC 61 - AIRBAG Warning Lamp Circuit Open

Caution: The SDM can maintain sufficient voltage to deploy the airbags for 10 minutes after the ignition is OFF and the fuse has been removed. If the airbags are not disconnected, service cannot begin until 10 minutes have passed after disconnecting power to the SDM.

Caution: During service procedures, be very careful when handling the SDM. Never strike or jar the SDM. Never power up the SIR system when the SDM is not rigidly attached to the vehicle. All SDM mounting bolts must be carefully tightened, and the SDM arrow must be pointing toward the front of the vehicle to ensure proper operation of the SIR system. The SDM could be activated if it is powered when it is not rigidly attached to the vehicle, resulting in unexpected deployment and possible injury.

Step	Action	Value(s)	Yes	No
1	Perform the SIR Diagnostic System Check. Is the SIR Diagnostic System Check complete?	-	Go to *Step 2*	-
2	Check the instrument panel fuse F18. Is fuse F18 blown?	-	Go to *Step 3*	Go to *Step 4*
3	1. Check for a short circuit and repair if necessary. 2. Replace the fuse. Is the repair complete?	-	Go to „SIR Diagnostic System Check”	-
4	1. Turn the ignition ON. 2. Check the power supply to fuse F18. Is the voltage equal to the specified value?	11-14 V	Go to *Step 6*	Go to *Step 5*
5	Repair the power supply to fuse F18. Is the repair complete?	-	Go to „SIR Diagnostic System Check”	-
6	1. Remove the instrument cluster. 2. Check the AIRBAG indicator bulb. Is the bulb in good condition?	-	Go to *Step 8*	Go to *Step 7*
7	Replace the AIRBAG indicator bulb. Is the repair complete?	-	Go to „SIR Diagnostic System Check”	-
8	1. Turn the ignition ON. 2. Check the voltage at instrument cluster connector B12. Is the voltage at B12 equal to the specified value?	11-14 V	Go to *Step 10*	Go to *Step 9*
9	Repair the open circuit between the instrument panel fuse F18 and instrument cluster connector B6. Is the repair complete?	-	Go to „SIR Diagnostic System Check”	-
10	Test the instrument cluster printed circuit for continuity between connectors B12 and A1. Is there continuity between B12 and A1 on the printed circuit?	-	Go to *Step 12*	Go to *Step 11*
11	Replace the instrument cluster. Is the repair complete?	-	Go to „SIR Diagnostic System Check”	-
12	1. Turn the ignition to LOCK and remove the key. 2. Disconnect the passenger airbag and the yellow clock spring connector on the steering column. 3. Disconnect the SDM electrical connector. 4. Turn the ignition ON. 5. Check the voltage at terminal 7 of the SDM connector. Is the voltage equal to the specified value?	11-14 V	Go to *Step 14*	Go to *Step 13*

DTC 61 - AIRBAG Warning Lamp Circuit Open (Cont'd)

Step	Action	Value(s)	Yes	No
13	Repair the open circuit between the instrument cluster and the SDM connector terminal 7. Is the repair complete?	-	Go to „SIR Diagnostic System Check”	-
14	1. Turn the ignition to LOCK and remove the key. 2. Disconnect the passenger airbag and the yellow clock spring connector on the steering column. 3. Replace the SDM. The arrow must be pointing toward the front of the vehicle. 4. Connect all SIR system components, and ensure that all components are properly mounted. Is the repair complete?	-	Go to „SIR Diagnostic System Check”	-

BLANK

DIAGNOSTIC TROUBLE CODE (DTC) 71
INTERNAL SENSING AND DIAGNOSTIC MODULE (SDM) FAILURE

Circuit Description

DTC 71 is an indication of a potential internal SDM malfunction and will set if any of the following conditions is detected:

- Reserve voltage discharge time has failed for three consecutive ignition cycles.
- The calculated checksum for internal memory does not match the stored value.
- The temporary memory storage area is malfunctioning.
- The permanent memory storage area is malfunctioning.
- The voltage measured at driver low and passenger low are too high.
- The voltage measured at driver low and passenger low are too low.
- The accelerometer inside the SDM is malfunctioning.
- The driver current source and/or passenger current source is malfunctioning.
- The SDM is unable to read from or write to electronically erasable programmable read only memory (EEPROM).
- The arming sensor inside the SDM is not closed during a deployment event.

DTC 71 Will Set When

Any of the indicated malfunctions is detected by the SDM. The malfunctions are detected at various times:

- Turn on.
- Continuous monitoring.
- Resistance measurement test.

Action Taken

The SDM turns on the AIRBAG indicator and sets a DTC 71.

DTC 71 Will Clear When

A scan tool CLEAR CODES command is received by the SDM. Some of the malfunctions will allow the AIRBAG indicator to turn off only briefly and then turn on again.

Test Description

The number(s) below refer to step(s) on the diagnostic table.

3. See the cautions below.

DTC 71 - Internal Sensing and Diagnostic Module (SDM) Failure

Caution: The SDM can maintain sufficient voltage to deploy the airbags for 10 minutes after the ignition is OFF and the fuse has been removed. If the airbags are not disconnected, service cannot begin until 10 minutes have passed after disconnecting power to the SDM.

Caution: During service procedures, be very careful when handling the SDM. Never strike or jar the SDM. Never power up the SIR system when the SDM is not rigidly attached to the vehicle. All SDM mounting bolts must be carefully tightened, and the SDM arrow must be pointing toward the front of the vehicle to ensure proper operation of the SIR system. The SDM could be activated if it is powered when it is not rigidly attached to the vehicle, resulting in unexpected deployment and possible injury.

Important: Codes 18, 24, and 71 cannot be reset if there has been a short to ground in the deployment loops. When DTC 18 or 24 has been set, it is necessary to replace the SDM. To avoid damaging the replacement SDM, ensure that the short to ground is repaired prior to installing a replacement SDM.

Step	Action	Value(s)	Yes	No
1	Perform the SIR Diagnostic System Check. Is the SIR Diagnostic System Check complete?	-	Go to *Step 2*	-
2	Check for current or history DTCs. Is either DTC 18 or DTC 24 also set as a current or a history DTC?	-	Go the diagnostic table for DTC 18 or DTC 24	Go to *Step 3*
3	1. Turn the ignition to LOCK and remove the key. 2. Disconnect the passenger airbag and the yellow clock spring connector on the steering column. 3. Replace the SDM. The arrow must be pointing toward the front of the vehicle. 4. Connect all SIR system components, and ensure that all components are properly mounted. Is the repair complete?	-	Go to „SIR Diagnostic System Check”	-

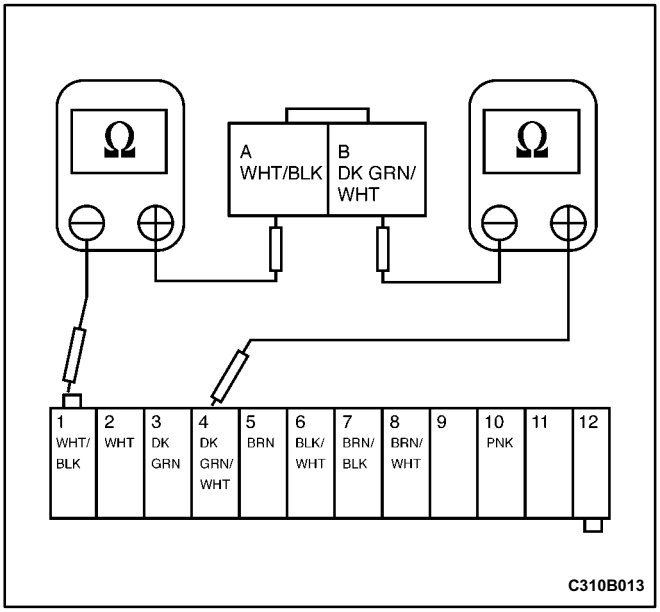

Caution: Do not use these illustrations to troubleshoot without consulting the diagnostic trouble code (DTC) charts. The DTC charts give additional safety precautions and detailed instructions for each test. Failure to follow the proper precautions can result in injury from unintended airbag deployment.

DIAGNOSTIC ILLUSTRATION 1

Checking the continuity between the passenger airbag and the sensing and diagnostic module (SDM).

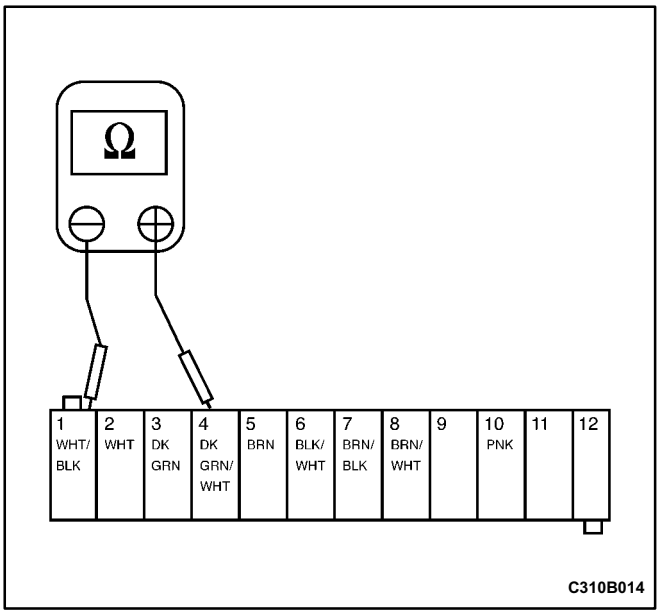

DIAGNOSTIC ILLUSTRATION 2

Checking for a short circuit between the passenger high and low circuits.

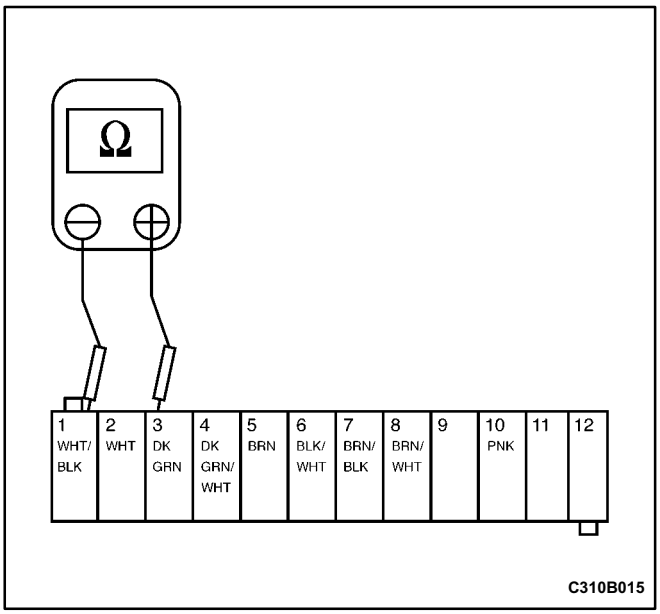

DIAGNOSTIC ILLUSTRATION 3

Checking for a short circuit between the passenger high and driver low circuits.

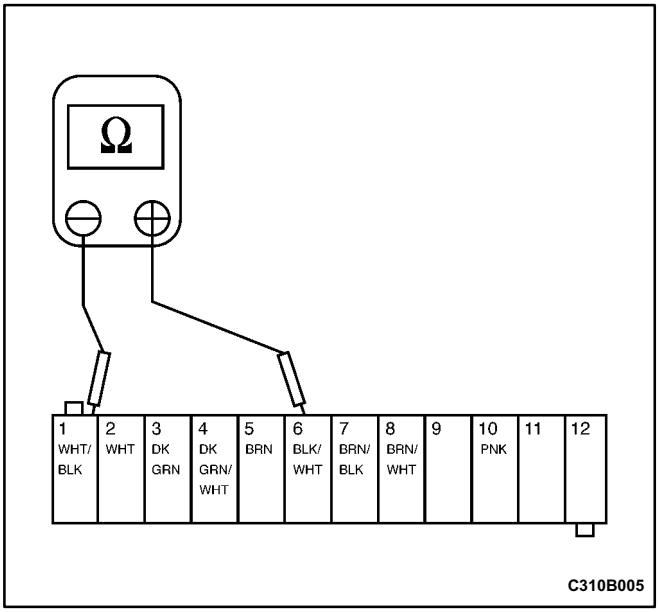

DIAGNOSTIC ILLUSTRATION 4

Checking for a short circuit between the passenger high circuit and ground.

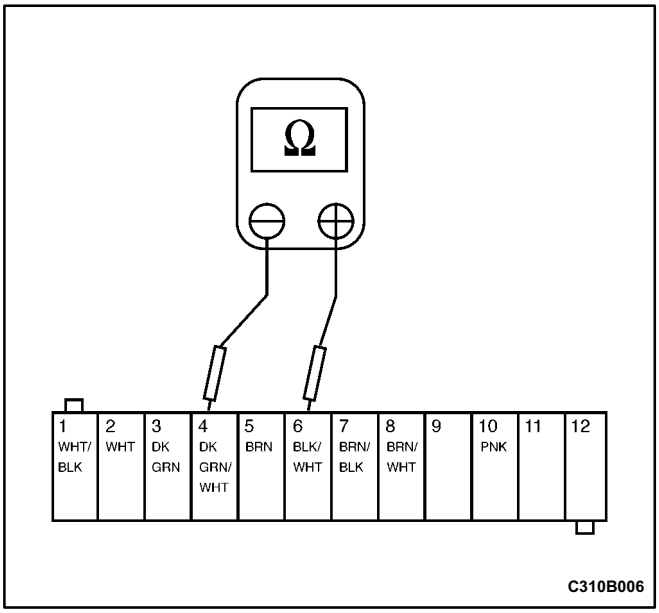

DIAGNOSTIC ILLUSTRATION 5

Checking for a short circuit between the passenger low circuit and ground.

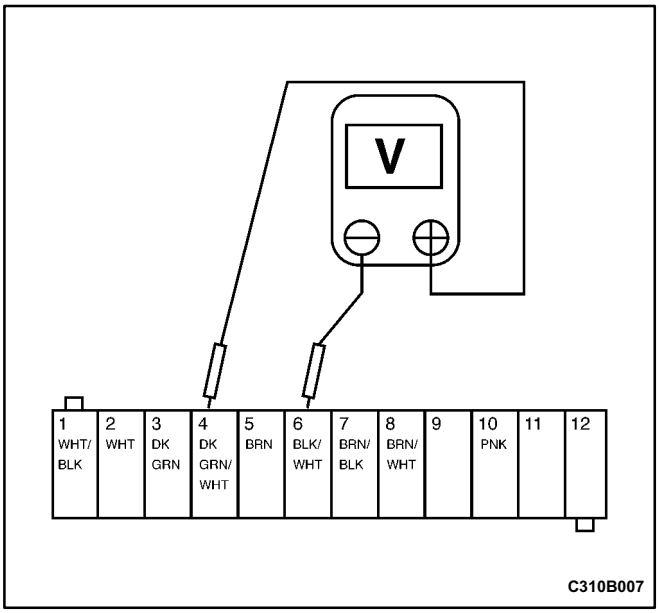

DIAGNOSTIC ILLUSTRATION 6

Checking for a short circuit between the passenger high circuit and voltage.

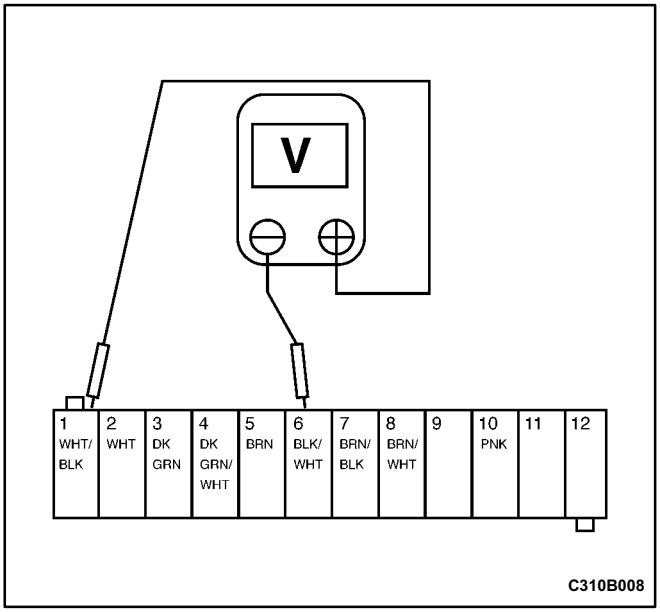

DIAGNOSTIC ILLUSTRATION 7

Checking for a short circuit between the passenger low circuit and voltage.

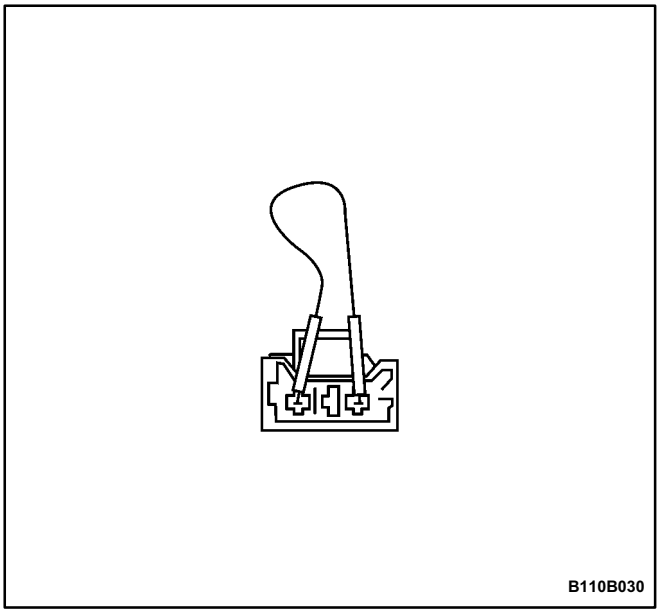

DIAGNOSTIC ILLUSTRATION 8

Placing a jumper on the SDM side of the yellow clock spring connector.

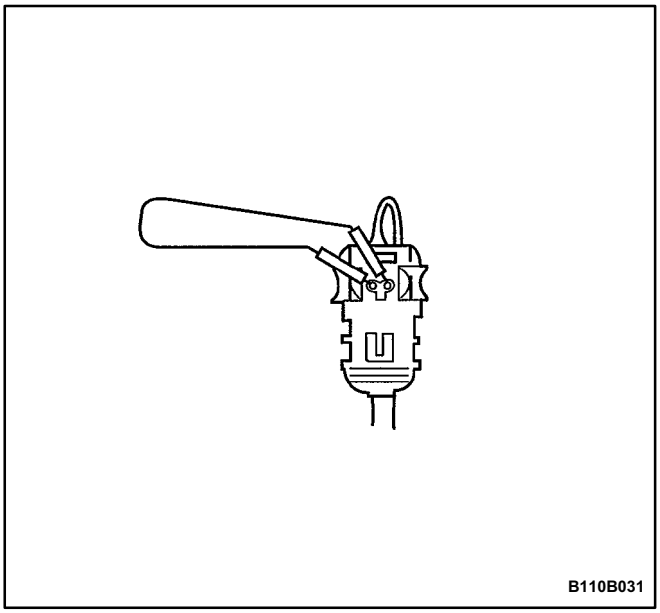

DIAGNOSTIC ILLUSTRATION 9

Placing a jumper on the clock spring to airbag connector.

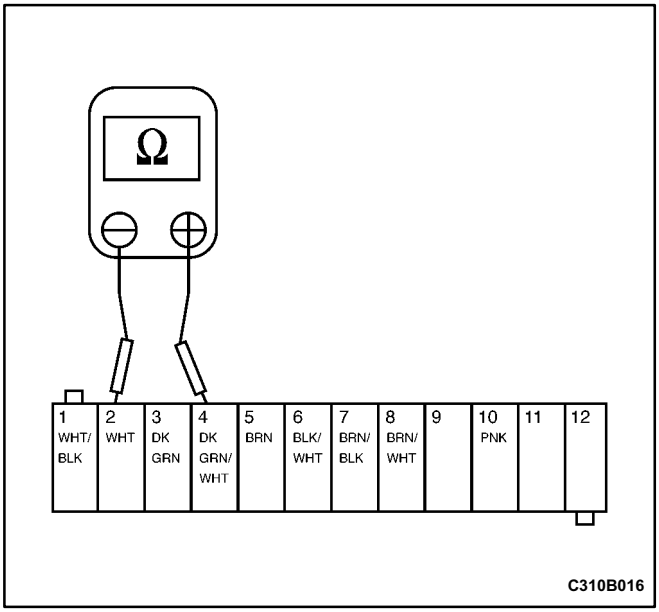

DIAGNOSTIC ILLUSTRATION 10

Checking for a short circuit between the driver high and passenger low circuits.

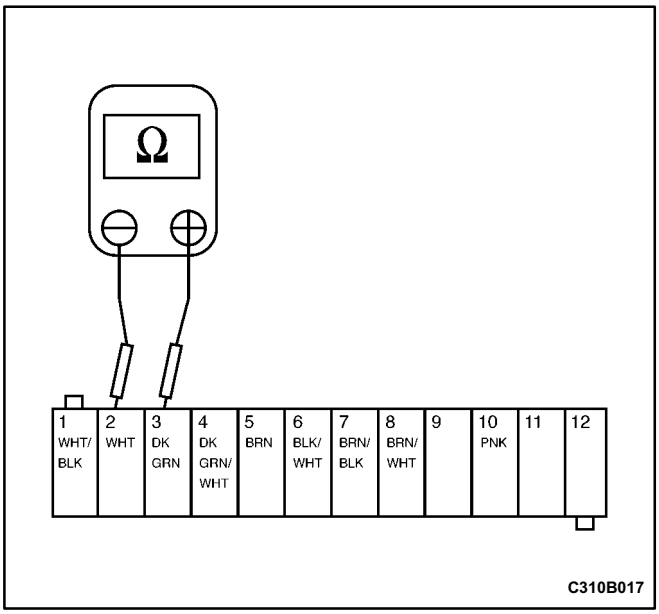

DIAGNOSTIC ILLUSTRATION 11

Checking for a short circuit between the driver high and driver low circuits.

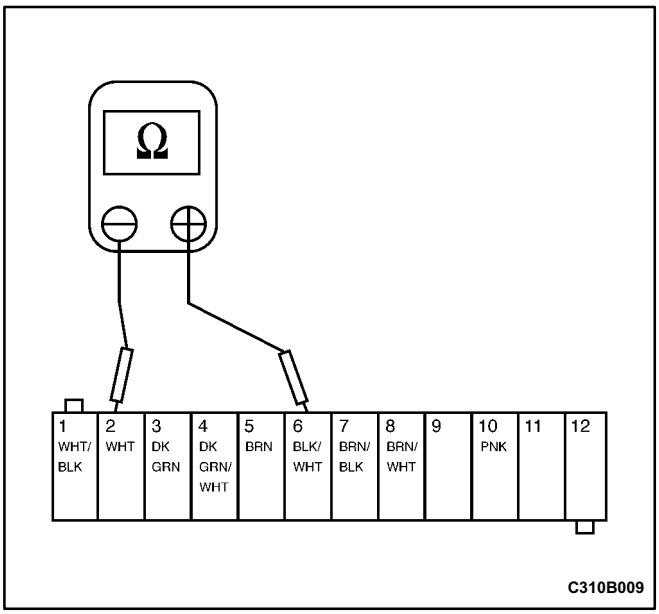

DIAGNOSTIC ILLUSTRATION 12

Checking for a short circuit between the driver high circuit and ground.

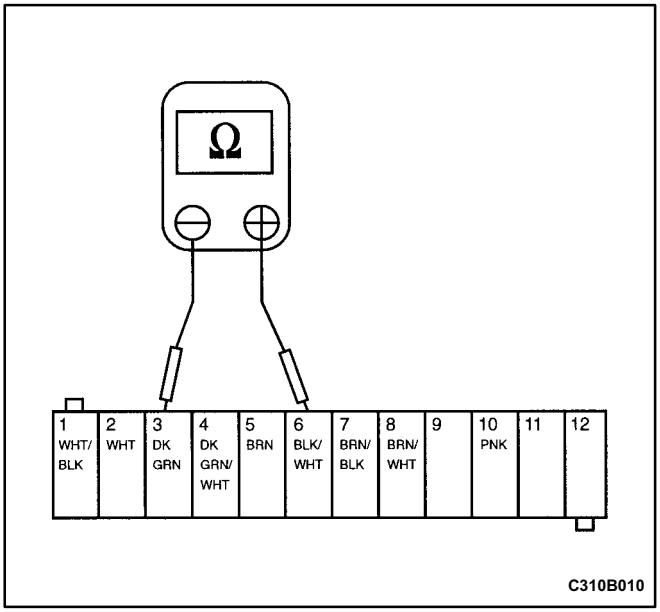

DIAGNOSTIC ILLUSTRATION 13

Checking for a short circuit between the driver low circuit and ground.

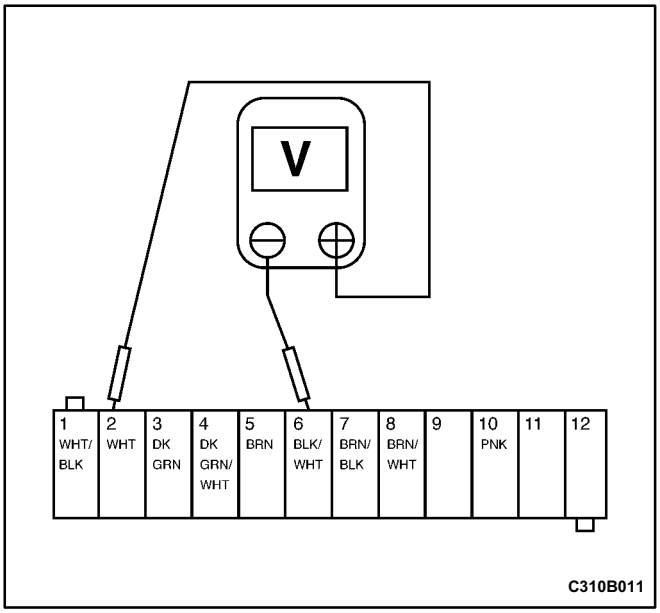

DIAGNOSTIC ILLUSTRATION 14

Checking for a short circuit between the driver high circuit and voltage.

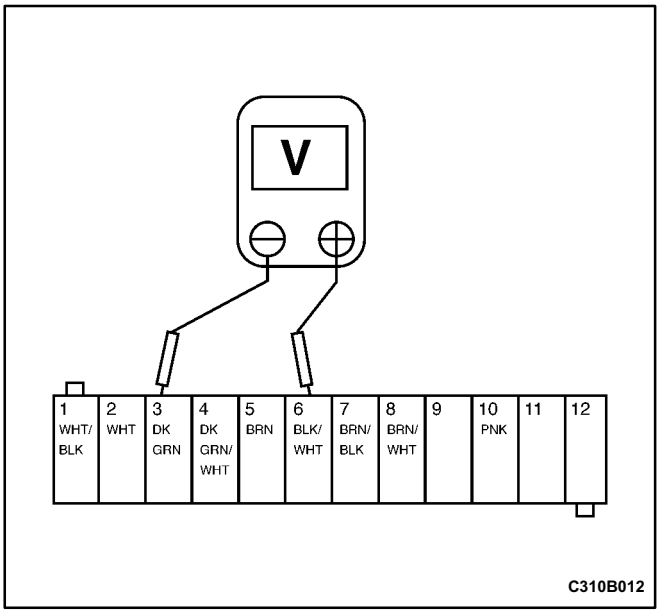

DIAGNOSTIC ILLUSTRATION 15

Checking for a short circuit between the driver low circuit and voltage.

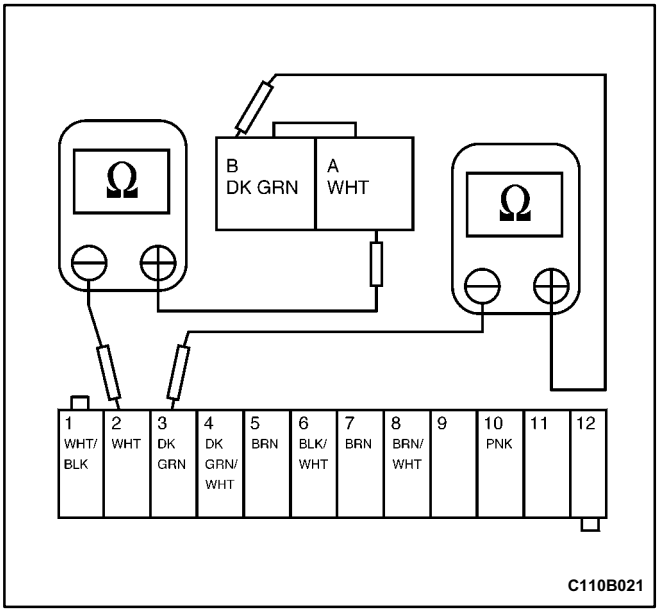

DIAGNOSTIC ILLUSTRATION 16

Checking for an open circuit between the sensing and diagnostic module (SDM) and the clock spring.

MAINTENANCE AND REPAIR

ON-VEHICLE SERVICE

SERVICE PRECAUTIONS

Caution: The SDM can maintain sufficient voltage to deploy the airbags for 10 minutes after the ignition is OFF and the AIRBAG fuse has been removed. If the airbags are not disconnected, service cannot begin until 10 minutes have passed after disconnecting power to the SDM. If the airbags are disconnected, service can begin immediately without waiting for the 10 minute time period to expire. Failure to temporarily disable the SIR system during servicing can result in unexpected deployment, personal injury, and otherwise unneeded SIR system repairs.

Caution: Do not measure the resistance of an airbag module with an ohmmeter. An ohmmeter checks resistance by sending current through a component, and the current from the ohmmeter's battery could cause unexpected deployment, personal injury, and otherwise unneeded SIR system repairs.

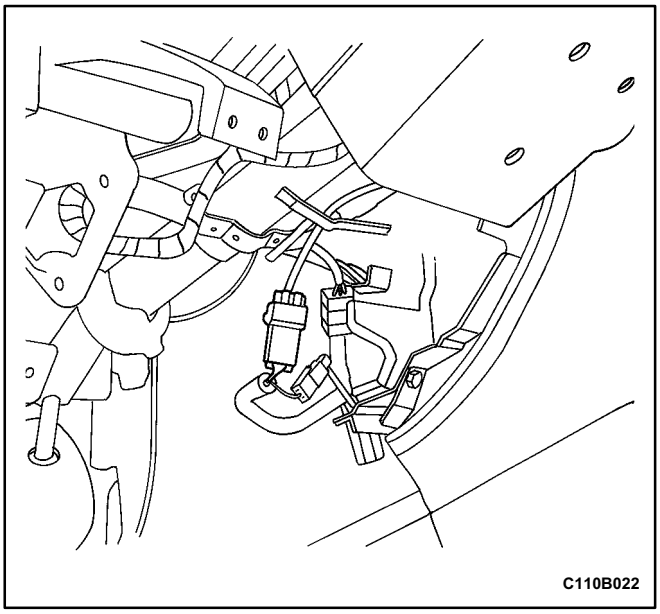

DISABLING THE SIR SYSTEM

(Left-Hand Drive Shown, Right-Hand Drive Similar)

1. Turn the steering wheel to the straightāhead position.
2. Turn the ignition switch to LOCK and remove the key.
3. Remove the driver side knee bolster. Refer to *Section 9G, Interior Trim*.
4. Disconnect the yellow clock spring connector on the lower steering column.
5. Remove the glove box. Refer to *Section 9E, Instrumentation/Driver Information*.
6. Disconnect the passenger airbag connector.

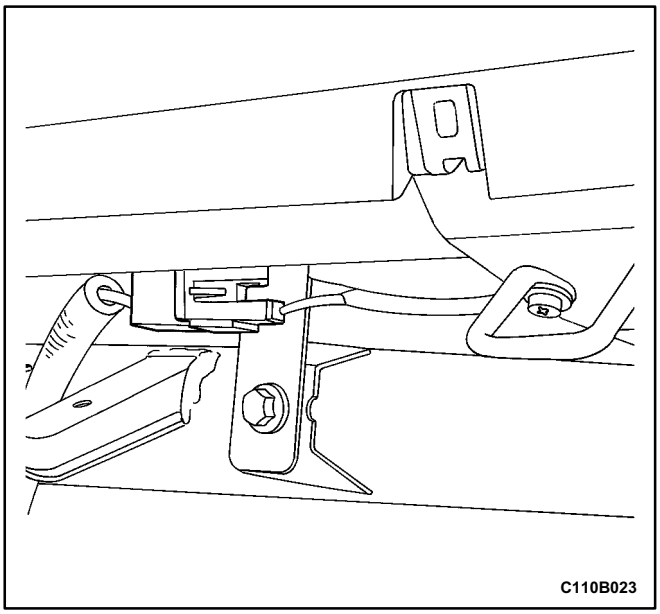

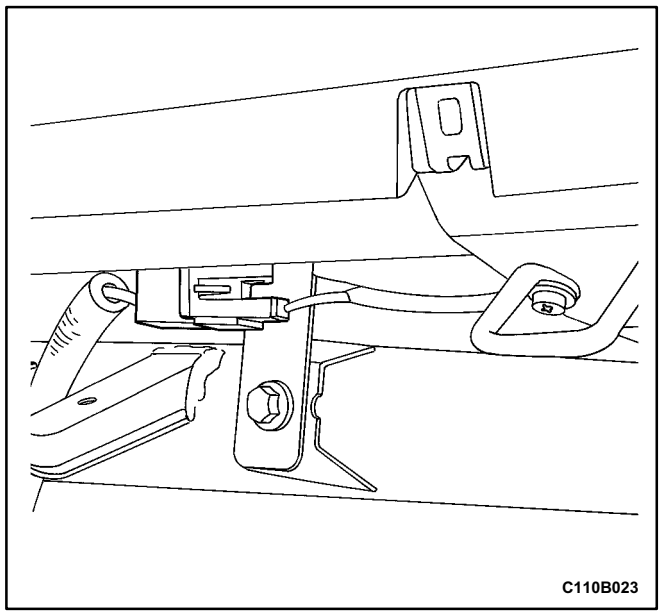

ENABLING THE SIR SYSTEM

1. Turn the ignition switch to LOCK and remove the key.
2. Connect the yellow connector at the passenger airbag.

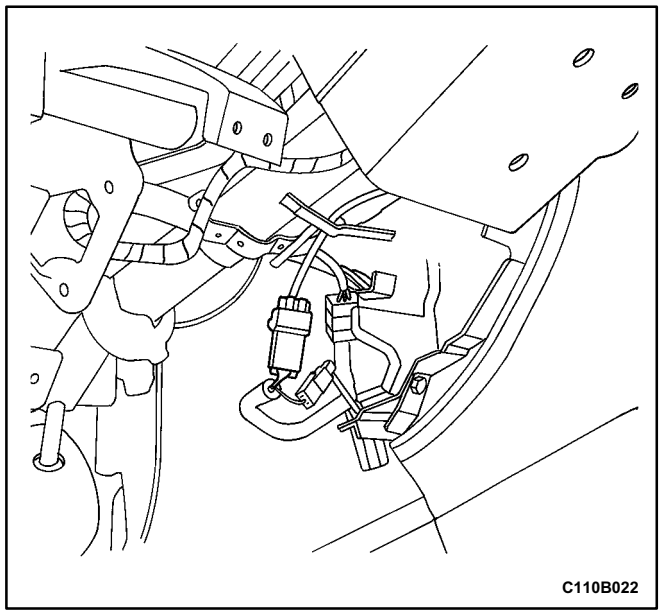

3. Install the glove box. Refer to *Section 9E, Instrumentation/Driver Information*.
4. Connect the yellow connector at the lower steering column.
5. Install the driver side knee bolster. Refer to *Section 9G, Interior Trim*.
6. Replace the AIRBAG fuse if it was previously removed.
7. Staying well away from the inflator modules, turn the ignition switch to ON, and verify that the AIRBAG indicator flashes seven times and then turns OFF. If it does not operate as described, perform the SIR Diagnostic System Check.

HANDLING, INSTALLATION, AND DIAGNOSIS

- Airbag modules should not be subjected to temperatures above 65°C (150°F).
- An airbag module or a sensing and diagnostic module (SDM) should not be used if it has been dropped from a height of 0.9 meters (3 feet) or greater.
- When a SDM is replaced, it must be oriented with the arrow on the sensor pointing toward the front of the vehicle.
- It is very important for the SDM to be installed flat on the mounting surface, parallel to the vehicle's longitudinal axis.
- To avoid setting diagnostic trouble codes (DTCs), do not apply power to the SIR system unless all components are connected or a diagnostic chart requests it.
- The SIR Diagnostic System Check must be the starting point of any SIR diagnostics. The SIR Diagnostic System Check will verify proper AIRBAG indicator operation and will lead you to the correct chart to diagnose any SIR malfunctions. Bypassing these procedures may result in extended diagnostic time and incorrect parts replacements.

REPAIRS AND INSPECTIONS REQUIRED AFTER AN ACCIDENT

Caution: Any repairs to the vehicle's structure must return it to the original production configuration. Deployment requires replacement of the SDM, the inflator modules, and a dimensional inspection of the steering column.

- If any SIR system components are damaged, they must be replaced. If SIR component mounting points are damaged, they must be repaired or replaced.
- Never use SIR parts from another vehicle. This does not include remanufactured parts purchased from an authorized source.
- Do not attempt to service the SDM, the clock spring, or the airbag modules. These items must be replaced if they are defective.
- Verify the part number of replacement airbag modules. Some inflator modules look identical but contain different internal components.

ACCIDENT WITH DEPLOYMENT - COMPONENT REPLACEMENT AND INSPECTIONS

Certain SIR components must be replaced or inspected for damage after a frontal crash involving airbag deployment. Replace the following SIR components:

- The SDM.
- Inflator modules.

Inspect the clock spring and replace it if necessary. Inspect the wiring and the connector for any signs of scorching, melting, or damage due to excessive heat.

ACCIDENT WITH OR WITHOUT DEPLOYMENT - COMPONENT INSPECTIONS

Certain inspections must be performed after any crash, whether the airbag has deployed or not:

- The steering column must be dimensionally inspected.
- Inspect the knee bolsters and mounting points for distortion, bending, cracking, or other damage.
- Inspect the instrument panel (I/P) steering column reinforcement plate for distortion, bending, cracking, or other damage.
- Inspect the I/P braces for for distortion, bending, cracking, or other damage.
- Inspect seat belts and mounting points. Refer to *Section 10A, Seat Belts*.

SENSING AND DIAGNOSTIC MODULE (SDM)

(Left-Hand Drive Shown, Right-Hand Drive Similar)

Caution: During service procedures, be very careful when handling the SDM. Never strike or jar the SDM. Never power up the SIR system when the SDM is not rigidly attached to the vehicle. All SDM mounting bolts must be carefully tightened, and the SDM arrow must be pointing toward the front of the vehicle to ensure proper operation of the SIR system. The SDM could be activated if it is powered while not rigidly attached to the vehicle, resulting in unexpected deployment and possible injury.

Important: If the vehicle interior has been exposed to extensive water intrusion such as water leaks, driving through high water, flooding, or other causes, the sensing and diagnostic module (SDM) and the SDM connector may need to be replaced. With the ignition OFF, inspect the area around the SDM, including the carpet. If any significant soaking or evidence of previous soaking is detected, the water must be removed, the water damage repaired, and the SDM and SDM connector must be replaced. Before attempting any of these repairs, the supplemental inflatable restraint (SIR) system must be disabled. Refer to „Disabling the SIR System” in this section.

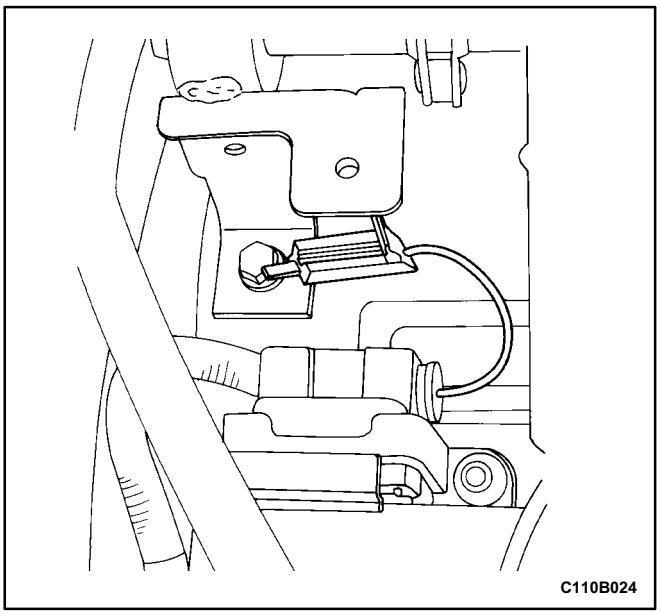

Removal Procedure

1. Disable the SIR system. Refer to „Disabling the SIR System" in this section.
2. Remove the floor console. Refer to *Section 9G, Interior Trim.*
3. Remove the connector position assurance lock, which is tethered to the SDM connector.

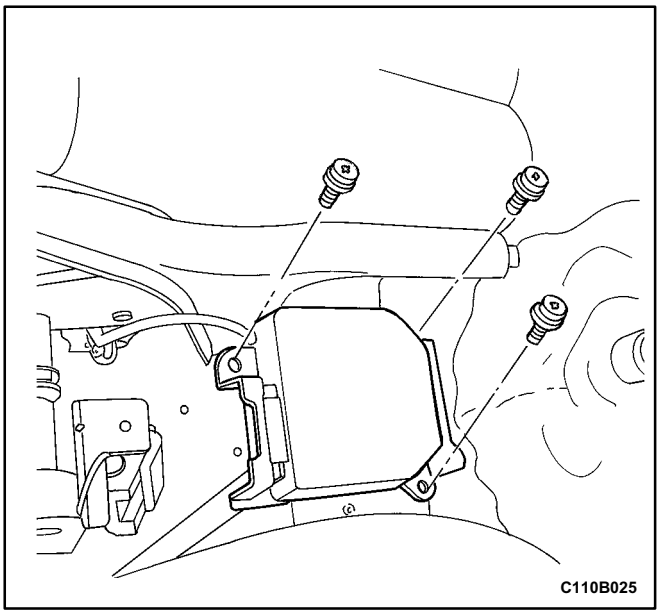

4. Disconnect the SDM electrical connector.
5. Remove the SDM mounting bolts.
6. Remove the SDM.

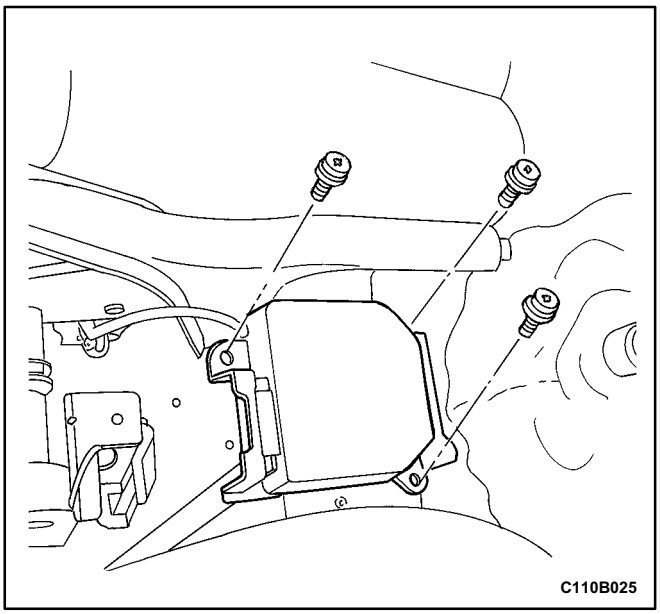

Installation Procedure

1. Install the SDM with the arrow pointing toward the front of the vehicle.
2. Install the SDM mounting bolts.

Tighten

Tighten the SDM mounting bolts to 10 N•m (89 lb•in).

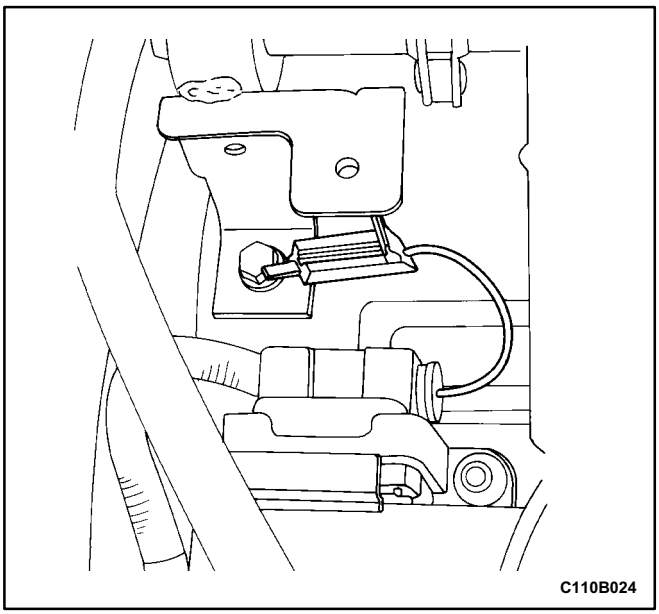

3. Connect the SDM electrical connector.
4. Install the connector position assurance lock.
5. Install the floor console. Refer to *Section 9G, Interior Trim*.
6. Enable the SIR system. Refer to „Enabling the SIR System" in this section.

DRIVER AIRBAG MODULE

After deployment, a powdery residue may be on the surface of the airbag. The powder consists primarily of cornstarch (used to lubricate the bag as it inflates) and byproducts of the chemical reaction. Sodium hydroxide dust (similar to lye soap) is produced as a byproduct of the deployment reaction. The sodium hydroxide then quickly reacts with atmospheric moisture and is converted to sodium carbonate and sodium bicarbonate (also known as baking soda). Therefore, it is unlikely that sodium hydroxide will be present after deployment. Wear gloves and safety glasses during the disposal procedure. Refer to „Deployed Airbag Module Disposal Procedure" in this section.

Removal Procedure

1. Disconnect the negative battery cable.

Caution: The SDM can maintain sufficient voltage to deploy the airbags for 10 minutes after the ignition is OFF and the AIRBAG fuse has been removed. If the airbags are not disconnected, service cannot begin until 10 minutes have passed after disconnecting power to the SDM. If the airbags are disconnected, service can begin immediately without waiting for the 10 minute time period to expire. Failure to temporarily disable the SIR system during servicing can result in unexpected deployment, personal injury, and otherwise unneeded SIR system repairs.

2. If the airbag has not been deployed, remove the knee bolster and disconnect the yellow clock spring connector on the lower steering column. Refer to „Disabling the SIR System" in this section.
3. Position the steering wheel straight ahead.
4. Remove the driver airbag module mounting bolts.

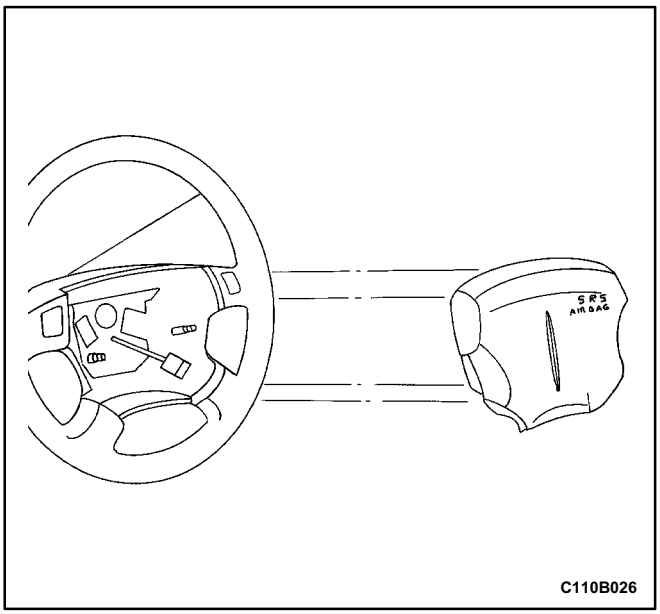

Caution: When handling an airbag module, always keep the top of the unit facing upward. This leaves room for the airbag to expand if the module unexpectedly deploys. Without room for expansion, a module suddenly propelled toward a person or object can cause injury or vehicle damage.

5. Remove the connectors from the horn terminal and the driver airbag module.
6. Remove the driver airbag module.

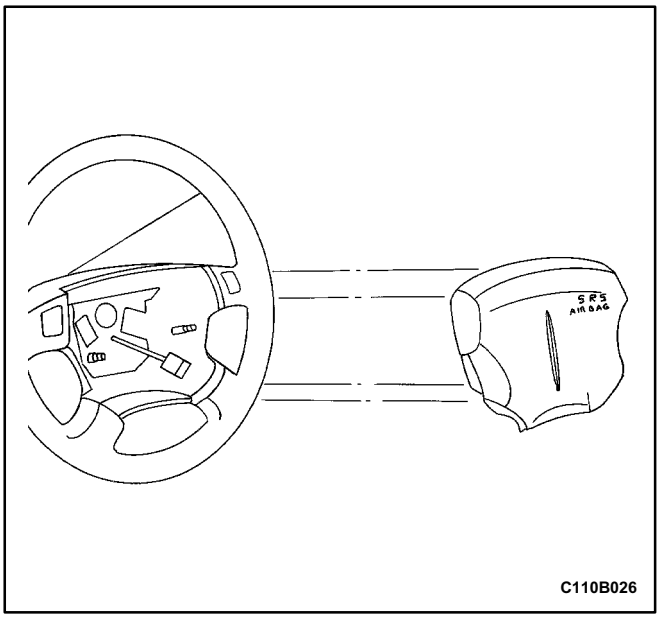

Installation Procedure

Caution: When removing an airbag module or handling a new airbag module, always keep the top of the unit facing upward. This leaves room for the airbag to expand if the module unexpectedly deploys. Without room for expansion, a module suddenly propelled toward a person or object can cause injury or vehicle damage.

1. Install the connectors to the horn terminal and the driver airbag module.
2. Install the driver airbag module.
3. Install the driver airbag module mounting bolts.

   Tighten

   Tighten the driver airbag module mounting bolts to 4.6 N•m (41 lb•in).
4. If the yellow clock spring connector was previously disconnected, connect the clock spring connector on the lower steering column and replace the knee bolster.
5. Connect the negative battery cable.

CLOCK SPRING

Removal Procedure

Caution: The SDM can maintain sufficient voltage to deploy the airbags for 10 minutes after the ignition is OFF and the AIRBAG fuse has been removed. If the airbags are not disconnected, service cannot begin until 10 minutes have passed after disconnecting power to the SDM. If the airbags are disconnected, service can begin immediately without waiting for the 10 minute time period to expire. Failure to temporarily disable the SIR system during servicing can result in unexpected deployment, personal injury, and otherwise unneeded SIR system repairs.

1. Disconnect the negative battery cable.
2. Turn the front wheels straight ahead.

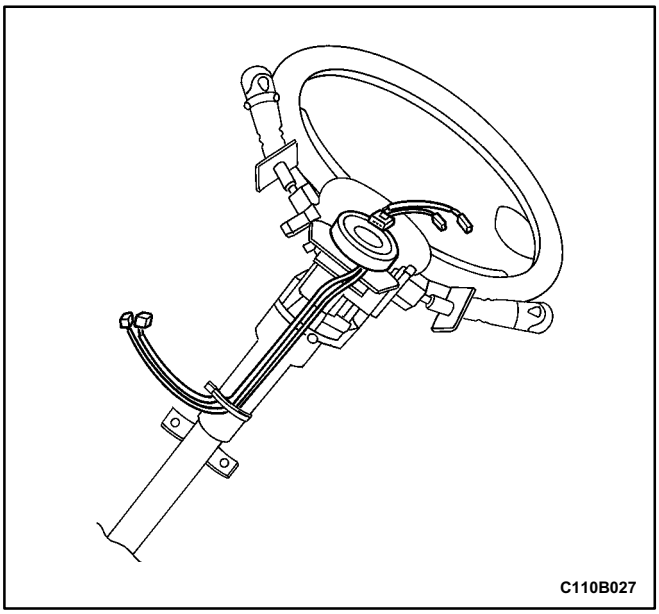

3. Remove the driver side airbag module. Refer to „Driver Airbag Module” in this section.
4. Remove the steering wheel. Refer to *Section 6E, Steering Wheel and Column*.
5. Remove the driver side knee bolster by carefully pulling until it snaps away from its mounting clips.
6. Disconnect the connectors at the lower steering column.

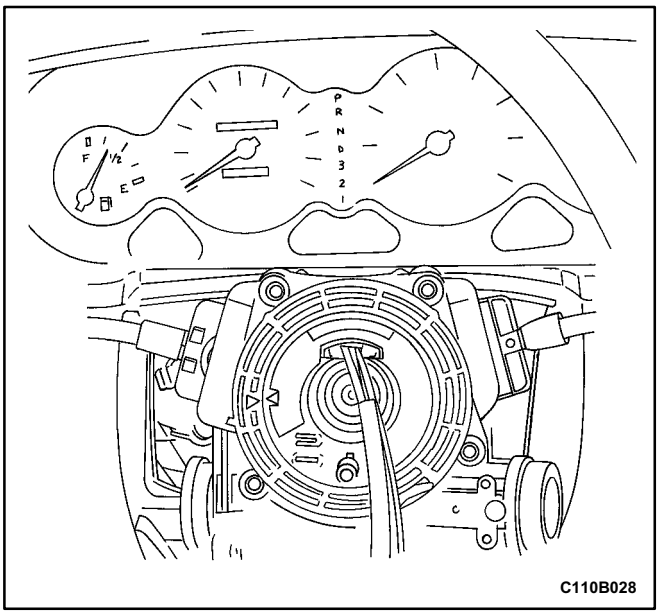

7. Remove the screws and the clock spring from the steering shaft.

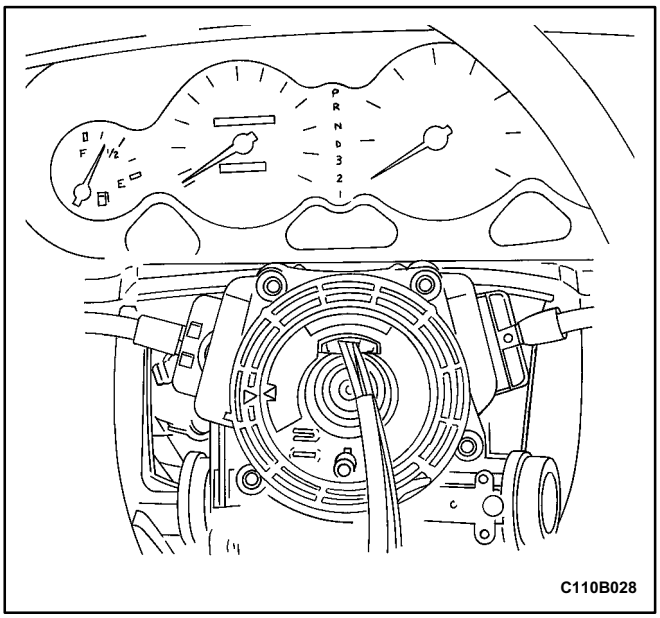

Installation Procedure

Caution: If the clock spring is not properly aligned, the steering wheel may not be able to rotate completely during a turn. Restricted turning ability can cause the vehicle to crash. Improper alignment of the clock spring also may make the supplemental inflatable restraints (SIR) system inoperative, preventing the airbags from deploying during a crash. Both of these outcomes can result in injury.

Notice: Turning the clock spring more than three turns clockwise or more than three turns counterclockwise can damage the spring.

1. Turn the front wheels straight ahead.
2. Install the clock spring with the screws.

Tighten

Tighten the clock spring mounting screws to 1.25 N•m (11 lb•in).

Important: The clock spring may come packed in material used to prevent damage to the spring during shipping or storage. Avoid installing any of the packing material with the clock spring.

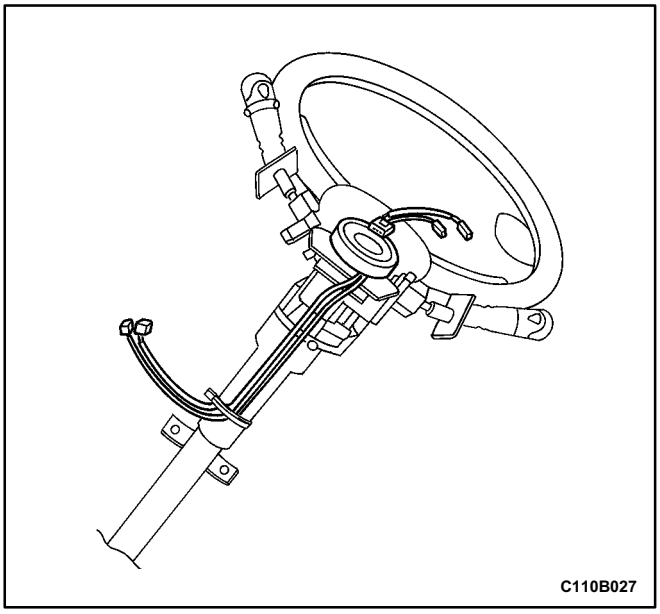

3. Turn the lobe of the clock spring clockwise to lock.
4. Turn the lobe of the clock spring counterclockwise approximately three turns to the neutral position, with the front wheels straight ahead.
5. Properly align the pointed marks on the components of the clock spring.
6. Connect the electrical connectors on the lower steering column.
7. Install the driver side knee bolster.
8. Install the steering wheel. Refer to *Section 6E, Steering Wheel and Column*.
9. Connect the driver side airbag module and the horn connectors.
10. Install the driver side airbag module. Refer to „Driver Side Airbag Module” in this section.
11. Connect the negative battery cable.

PASSENGER AIRBAG MODULE

(Left-Hand Drive Shown, Right-Hand Drive Similar)

After deployment, a powdery residue may be on the surface of the airbag. The powder consists primarily of cornstarch (used to lubricate the bag as it inflates) and by products of the chemical reaction. Sodium hydroxide dust (similar to lye soap) is produced as a by product of the deployment reaction. The sodium hydroxide then quickly reacts with atmospheric moisture and is converted to sodium carbonate and sodium bicarbonate (also known as baking soda). Therefore, it is unlikely that sodium hydroxide will be present after deployment. Wear gloves and safety glasses during the disposal procedure. Refer to „Deployed Airbag Module Disposal Procedure" in this section.

Removal Procedure

Caution: The SDM can maintain sufficient voltage to deploy the airbags for 10 minutes after the ignition if OFF or the AIRBAG fuse has been removed.

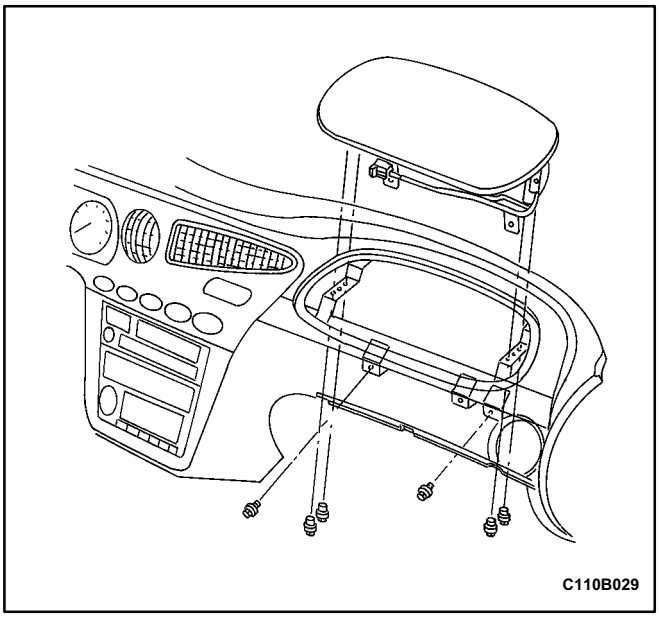

1. Turn the ignition switch to LOCK and remove the key.
2. Remove the glove box. Refer to *Section 9E, Instrumentation/Driver Information*.
3. Disconnect the passenger airbag yellow electrical connector.
4. Remove the passenger airbag mounting bolts.
5. Remove the passenger airbag module from the instrument panel.

Installation Procedure

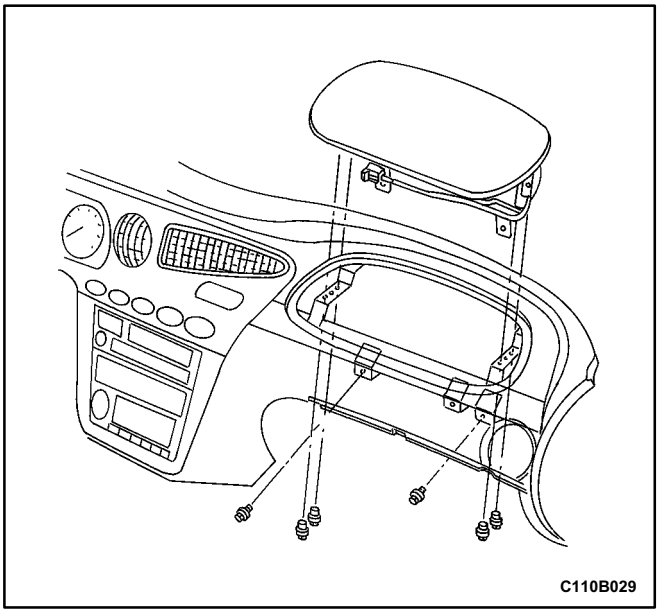

1. Install the passenger airbag module in the instrument panel.
2. Install the passenger airbag mounting bolts.

   ### Tighten

   Tighten the passenger airbag mounting bolts to 10 N•m (89 lb•in).
3. Connect the passenger airbag electrical connector.
4. Install the glove box. Refer to *Section 9E, Instrumentation/Driver Information*.
5. Perform the SIR Diagnostic System Check in this section.

AIRBAG MODULE DEPLOYMENT (IN VEHICLE)

Deploy airbags before disposing of them. If a vehicle to be scrapped, the airbags may be deployed inside the vehicle.

Caution: Before deploying the airbags, remove all loose objects from the airbag's expansion area.

Caution: Deploy the airbags with the vehicle doors closed and the side windows open.

Caution: Deploy the airbags only in an evacuated area. Service personnel who must be present during the deployment should be at least 10 meters (33 feet) in front of the vehicle.

Caution: Do not connect the voltage source until after having completed all other preparations for the deployment of the airbags.

Caution: Allow a deployed airbag module to cool for at least 30 minutes before handling.

Caution: Wear gloves and eye protection during the disposal process.

Caution: If the deployment fails, disconnect the voltage source and wait 5 minutes before approaching the vehicle.

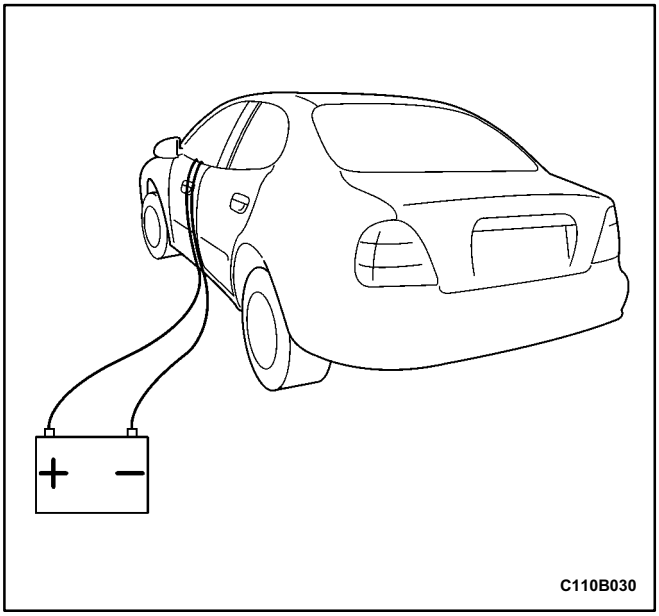

Deployment Procedure

1. Disconnect both battery cables and place the battery at least 10 meters (33 feet) from the vehicle.

Caution: The SDM can maintain sufficient voltage to deploy the airbags for 10 minutes after the ignition is OFF and the AIRBAG fuse has been removed. If the airbags are not disconnected, service cannot begin until 10 minutes have passed after disconnecting power to the SDM. If the airbags are disconnected, service can begin immediately without waiting for the 10 minute time period to expire. Failure to temporarily disable the SIR system during servicing can result in unexpected deployment, personal injury, and otherwise unneeded SIR system repairs.

2. Remove the knee bolster from the steering column. Refer to *Section 9G, Interior Trim*.
3. At the lower steering column, cut the two wires leading from the supplemental inflatable restraint (SIR) harness to the clock spring.
4. Strip 13 mm (0.5 inch) of insulation from the ends of the wires leading to the clock spring.
5. Use two additional wires, each at least 10 meters (33 feet) long, to reach from the deployment battery to the inflator module.
6. Strip 13 mm (0.5 inch) of insulation from the ends of these two additional wires.
7. Twist the two wires together at one end.
8. Place the twisted ends of the two wires near the deployment battery. Do not connect the wires to the battery at this time.
9. Using the free ends of the 10 meter (33 foot) wires leading to the clock spring, make two splices, one at each wire from the airbag module.
10. Wrap the splices with insulating tape.
11. Now that the free ends of the 10 meter (33 foot) wires are spliced to the airbag module wires, and the ends that are twisted together are near the deployment battery, clear the area.
12. Untwist the wires that are near the deployment battery.
13. Touch one wire to the positive battery terminal and touch the other wire to the negative battery terminal. The airbag will deploy.

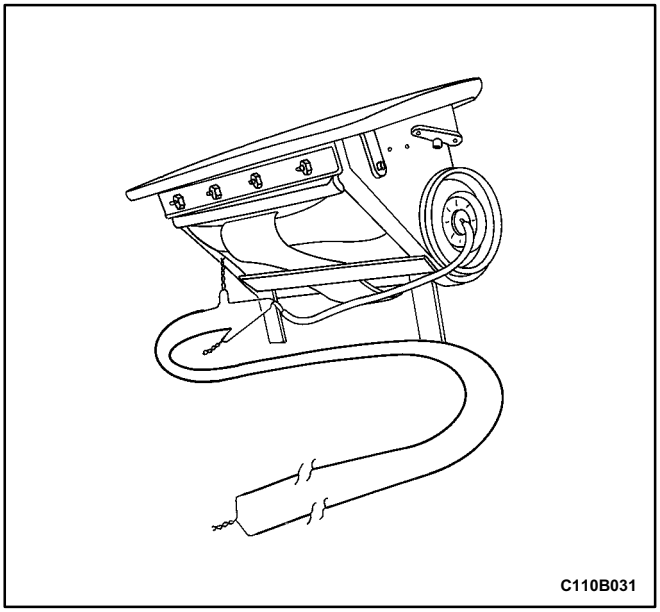

14. Repeat the procedure for the passenger airbag, cutting the wires to the passenger airbag module instead of the wires leading to the clock spring.
15. Strip 13 mm (0.5 inch) of insulation from the ends of the wires leading to the passenger airbag module.
16. Use two additional wires, each at least 10 meters (33 feet) long, to reach from the deployment battery to the passenger airbag module.
17. Strip 13 mm (0.5 inch) of insulation from the ends of these two additional wires.
18. Twist the two wires together at one end.
19. Place the twisted ends of the two wires near the deployment battery. Do not connect the wires to the battery at this time.
20. Using the free ends of the 10 meter (33 foot) wires to the passenger airbag module, make two splices, one at each wire from the airbag module.

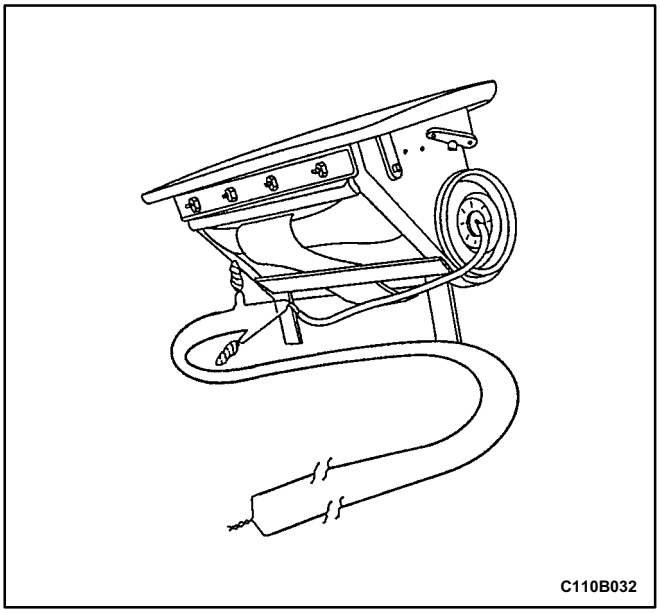

21. Wrap the splices with insulating tape.

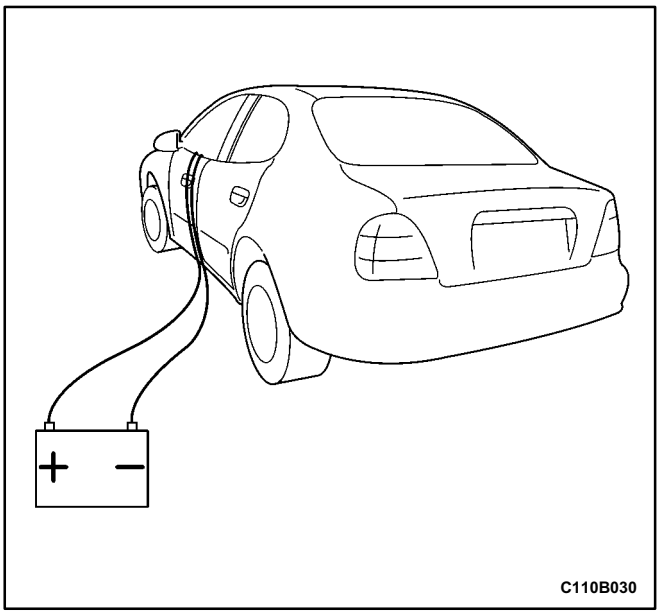

22. Now that the free ends of the 10 meter (33 foot) wires are spliced to the passenger airbag module wires, and the ends that are twisted together are near the deployment battery, clear the area.
23. Untwist the wires that are near the deployment battery.
24. Touch one wire to the positive battery terminal and touch the other wire to the negative battery terminal. The passenger airbag will deploy.
25. Using the proper precautions, dispose of the deployed airbag. Refer to „Deployed Airbag Module Disposal Procedure” in this section.

AIRBAG MODULE DEPLOYMENT (OUTSIDE OF VEHICLE)

If the vehicle is within the warranty period, contact the Daewoo regional service manager for approval or special instructions before deploying the airbag modules. Deploy airbag modules in the following situations:

- If a vehicle is to be scrapped. Refer to „Airbag Module Deployment (Inside of Vehicle)" in this section.
- If an airbag module is damaged during transit, storage, or service.

Caution: Deploy the airbags only in an evacuated area. Service personnel who must be present during the deployment should be at least 10 meters (33 feet) in front of the vehicle.

Caution: Do not connect the voltage source until completing all other preparations for the deployment of the airbags.

Caution: Allow a deployed airbag module to cool for at least 30 minutes before removing it from the vehicle.

Caution: Wear gloves and eye protection during the disposal process.

Caution: If the deployment fails, disconnect the voltage source and wait 5 minutes before approaching the vehicle.

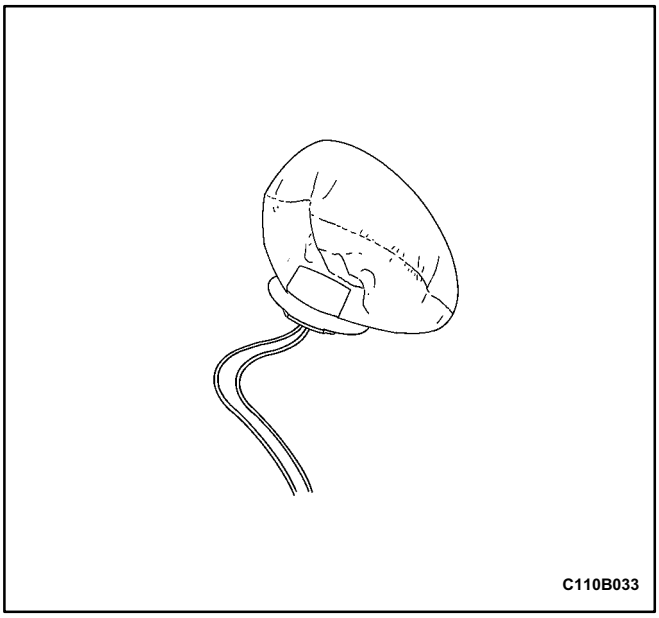

1. Position the airbag module face up, on flat ground outdoors, at least 10 meters (33 feet) from any obstacles or people.
2. Place a vehicle battery at least 10 meters (33 feet) away from the airbag module.
3. Deploy the airbag module using the deployment tool.
4. Using the proper precautions, dispose of the deployed airbag. Refer to „Deployed Airbag Module Disposal Procedure" in this section.

DEPLOYED AIRBAG MODULE DISPOSAL PROCEDURE

After deployment, a powdery residue may be on the surface of the airbag. The powder consists primarily of cornstarch (used to lubricate the bag as it inflates) and by products of the chemical reaction. Sodium hydroxide dust (similar to lye soap) is produced as a by product of the deployment reaction. The sodium hydroxide then quickly reacts with atmospheric moisture and is converted to sodium carbonate and sodium bicarbonate (also known as baking soda). Therefore, it is unlikely that sodium hydroxide will be present after deployment.

Caution: Wear gloves and safety glasses during the disposal procedure.

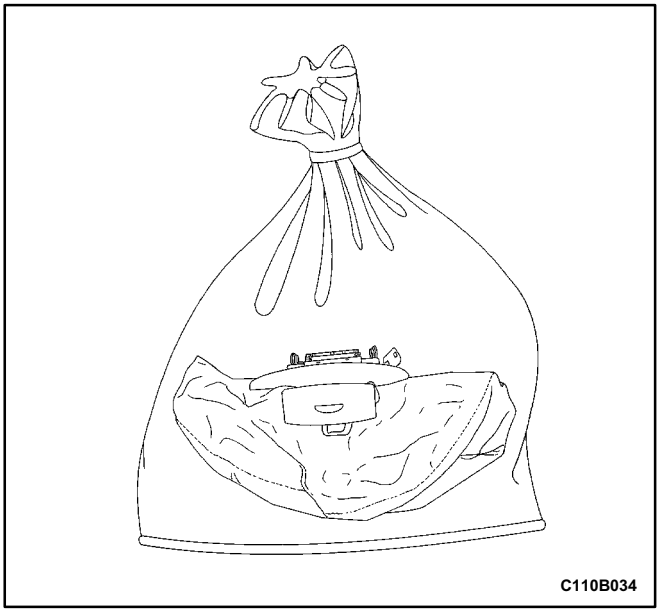

Caution: After deployment, the metal surfaces of the airbag module will be hot. In order to avoid the risk of an injury or a fire, do not place the deployed airbag modules near any flammable objects, and allow the airbag modules to cool for 30 minutes before handling them.

Deploy an airbag before disposing of it. This includes those in a whole vehicle being scrapped. If the vehicle is still within the warranty period, contact the Daewoo regional service manager for approval or special instructions before deploying an airbag module. Deployed airbag modules should be disposed of in the same manner as any other scrap parts, with the addition of the following steps:

1. Place the deployed airbag in a sturdy plastic bag.
2. Seal the plastic bag securely.
3. Wash your hands and rinse them with water after handling a deployed airbag.

SIR WIRING REPAIR

Connector Repair

Caution: Before attempting any repairs, the SIR system must be disabled. Refer to „Disabling the SIR System" in this section for instructions on how to disable the SIR system.

The terminals in the SIR system are made of a special metal to provide necessary contact integrity for the sensitive, low energy circuits. These terminals are available only in the connector repair assembly packs. Do not substitute any other terminals for those in the assembly packs.

Wire Repair

Caution: Before attempting any repairs, the SIR system must be disabled. Refer to „Disabling the SIR System" in this section for instructions on how to disable the SIR system.

Do not repair wires or connectors attached to the passenger airbag module or the clock spring. If the wires or connectors on the clock spring or passenger airbag are damaged, the clock spring or passenger airbag must be replaced. If any other wire is damaged, the wire should be repaired by splicing in a new section of wire of the same gauge. To protect the repair, spliced wires must be sealed with heat shrink tubing. If the splices are not made correctly, the result will be a high resistance connection, and the AIRBAG indicator will turn on.

GENERAL DESCRIPTION AND SYSTEM OPERATION

SIR SYSTEM

(Left–Hand Drive Shown, Right–Hand Drive Similar)

The supplemental inflatable restraints (SIR) system is a safety device used in conjunction with the seat belts.

The airbag does not replace the function of the seat belt. The driver and the passengers must always fasten their seat belts and adjust them for a proper fit.

The SIR is designed to protect the driver and the front seat passenger in the event of a significant frontal impact to the vehicle. The airbags deploy if the force is applied from a direction within 30 degrees of the vehicle's centerline.

The SIR system consists of a

- Driver side airbag module.
- Passenger side airbag module.
- Sensing and diagnostic module (SDM).
- Clock spring.
- Wire harness and connectors.
- AIRBAG indicator on the instrument cluster.

There are two separate deployment loops in the SIR system. The term „loop” is used because current leaves the SDM and returns to the SDM during deployment or testing. One loop is the circuit from the SDM to the driver airbag and back to the SDM. The other loop is the circuit from the SDM to the passenger airbag and back to the SDM.

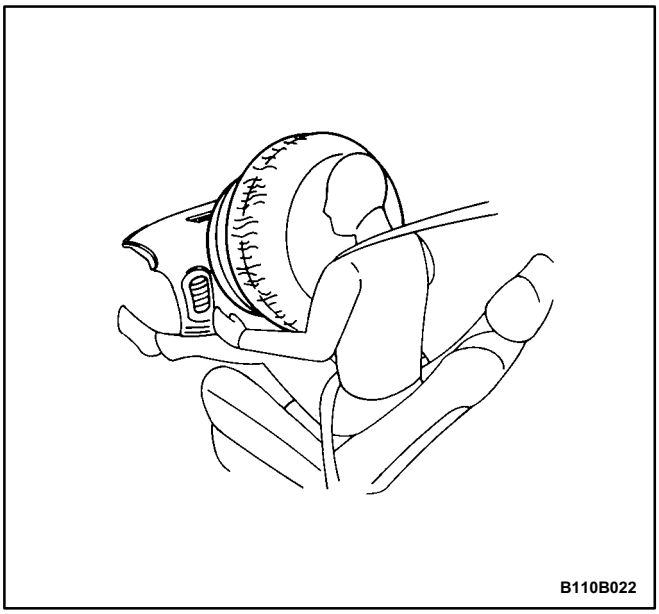

AIRBAG MODULES

Driver Airbag Module

Caution: Tampering with the driver side airbag module creates the risk of an injury from an unexpected deployment. Therefore, the driver side airbag module should never be disassembled.

The driver airbag module is under the center pad of the steering wheel.

The driver airbag module contains an ignition charge and a gas generator to inflate the folded airbag.

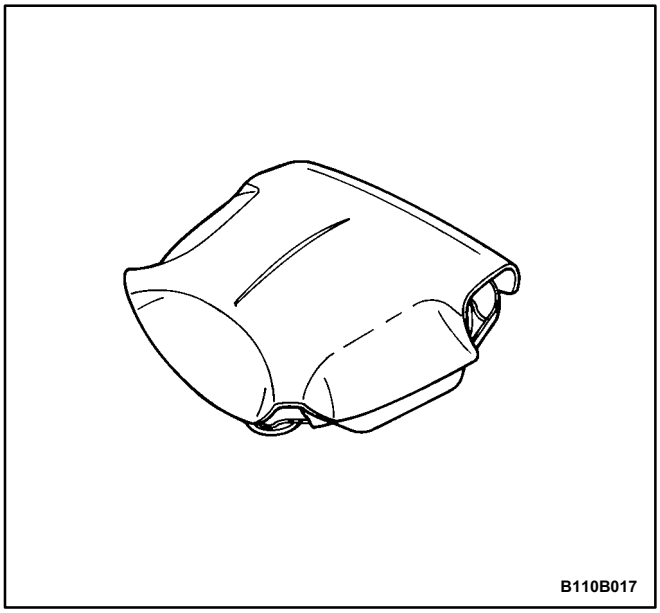

Passenger Airbag Module

Caution: Tampering with the passenger side airbag module creates the risk of an injury from an unexpected deployment. Therefore, the passenger side airbag module should never be disassembled.

The passenger airbag module is on the passenger side of the instrument panel.

The passenger airbag module contains an ignitor charge and a gas generator to inflate the folded airbag.

The passenger airbag also includes wiring and a connector. The airbag side of the yellow connector contains a shorting bar which short circuits the passenger high circuit to the passenger low circuit when the connector is disconnected. The shorting bar prevents current from traveling through the passenger airbag module during servicing. The shorting bar is disengaged when the connector is connected. If the wiring or connector on the passenger airbag is damaged, the passenger airbag must be replaced.

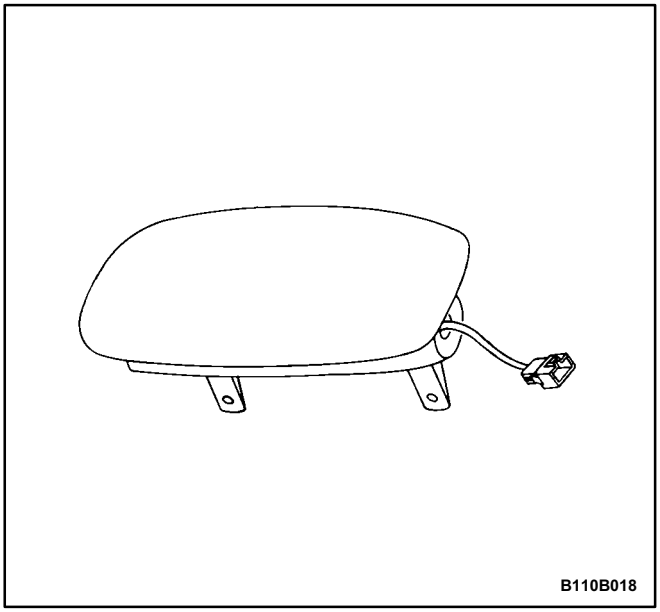

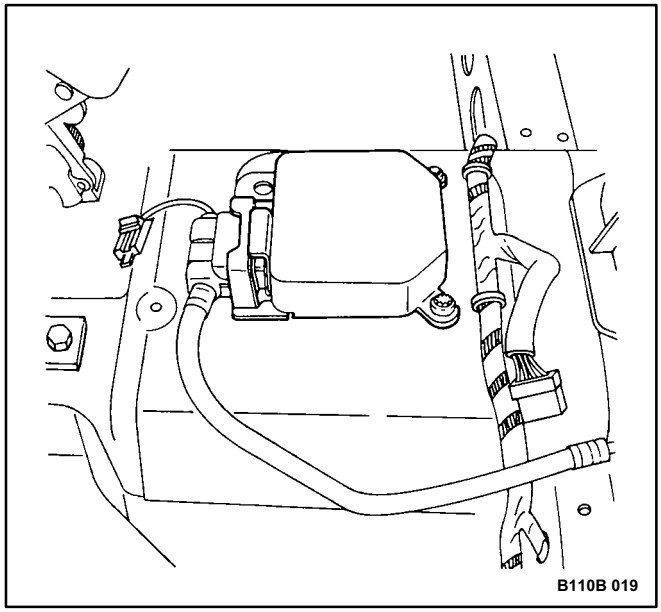

SENSING AND DIAGNOSTIC MODULE (SDM)

Caution: During service procedures, be careful when handling the SDM. Never shake or jar the SDM. Never apply power to the SIR system when the SDM is not rigidly attached to the vehicle. All SDM mounting bolts must be fully tightened. The arrow on the SDM must point toward the front of the vehicle. Failure to follow these precautions could cause deployment and result in personal injury.

The SDM is located on the floor beneath the floor console assembly. The SDM performs the following functions:

- Monitors the supplemental inflatable restraint (SIR) system electrical components and sets a diagnostic trouble code (DTC) when a malfunction is detected.
- Records any faults that are discovered.
- Displays SIR diagnostic trouble codes and system status information when connected to a scan tool.
- Illuminates the AIRBAG indicator to alert the driver to any faults.
- Provides a reserve power source to deploy the airbags if an accident has disabled the normal power source.
- Monitors vehicle velocity changes to detect frontal impacts which are severe enough to warrant deployment.
- Causes current to flow through the airbag modules to cause deployment if a frontal impact of sufficient force is detected.

The SDM contains no user serviceable parts.

AIRBAG WARNING LAMP

The instrument cluster contains an AIRBAG warning indicator. To verify the operation of the AIRBAG indicator and the sensing and diagnostic module (SDM), the SDM performs a turn-on test when the ignition is turned ON. The SDM flashes the AIRBAG indicator seven times by supplying an intermittent ground to the indicator lamp circuit. After flashing seven times, the AIRBAG indicator will turn off if no malfunctions have been detected.

The AIRBAG indicator stays on if the SDM has detected malfunctions in the internal or external circuits which could potentially affect the operation of the supplemental inflatable restraint (SIR) system. Some malfunctions could result in nondeployment when necessary or deployment under conditions which would not normally result in deployment.

When the SDM is not properly attached to its connector, the AIRBAG circuit is shorted to ground because there is a shorting bar within the SDM electrical connector. The shorting bar is disengaged when a proper connection is made, but if a poor connection exists the SDM connector supplies a ground to the AIRBAG indicator independently of the SDM, and the AIRBAG indicator turns on.

CLOCK SPRING

Caution: Disassembling the clock spring can cause injury or cause the clock spring to malfunction.

Caution: Over rotating the clock spring without the steering wheel in position could damage the clock spring and result in an inoperative driver airbag.

There is a coil assembly in the steering which is referred to as a clock spring because of its internal resemblance to the type of spring used in a mechanical clock. The clock spring should never be disassembled, and there is no timekeeping function. The clock spring contains current carrying coils. Two of the current carrying coils maintain continuous contact within the driver deployment loop while the steering wheel is rotated. The clock spring also contains a coil that maintains continuous contact for the horn circuit.

Turning the steering wheel in one direction tightens the coil, and turning the steering wheel in the opposite direction loosens the coil. Do not turn rotate the clock spring when the steering wheel is not attached. Refer to „Clock Spring" in this section for proper installation of the clock spring.

The clock spring also includes the wiring and the connectors for the horn circuit and the driver airbag circuit. A yellow two-way connector on the lower steering column is attached to the clock spring wiring. The airbag side of the yellow connector contains a shorting bar which connects the driver high circuit to the driver low circuit when the connector is disconnected. The shorting bar prevents current from traveling through the driver airbag module during servicing. The shorting bar is disengaged when the clock spring connector is connected.

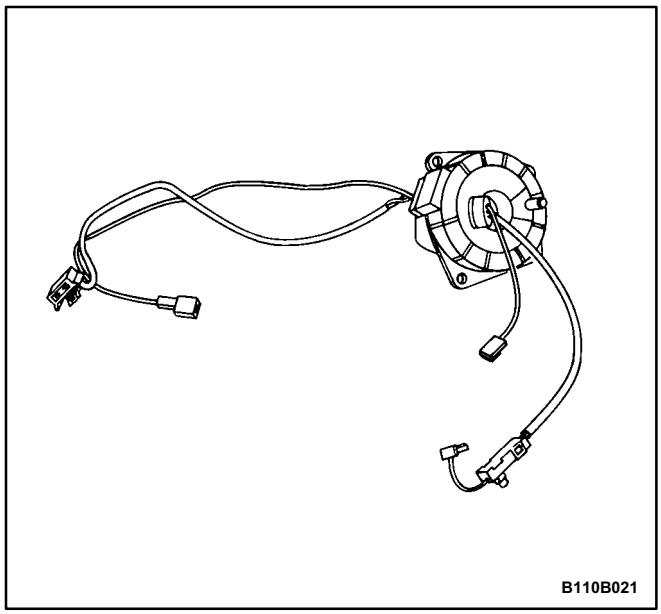

BODY AND ACCESSORIES

CONTENTS

SECTION 9A	BODY WIRING SYSTEM
SECTION 9B	LIGHTING SYSTEMS
SECTION 9C	HORNS
SECTION 9D	WIPERS / WASHER SYSTEMS
SECTION 9E	INTRUMENTATION / DRIVER INFORMATION
SECTION 9F	AUDIO SYSTEMS
SECTION 9G	INTERIOR TRIM
SECTION 9H	SEATS
SECTION 9I	WATERLEAKS
SECTION 9J	WINDNOISE
SECTION 9K	SQUEAKS AND RATTLES
SECTION 9L	GLASS AND MIRRORS
SECTION 9M	EXTERIOR TRIM
SECTION 9N	FRAME AND UNDERBODY
SECTION 9O	BUMPERS AND FASCIAS
SECTION 9P	DOORS
SECTION 9Q	ROOF
SECTION 9R	BODY FRONT END
SECTION 9S	BODY REAR END
SECTION 9T	IMMOBILIZER ANTI–THEFT SYSTEM
SECTION 9U	CRUISE CONTROL SYSTEM

SECTION 9A

BODY WIRING SYSTEM

CAUTION: Disconnect the negative battery cable before removing or installing any electrical unit or when a tool or equipment could easily come in contact with exposed electrical terminals. Disconnecting this cable will help prevent personal injury and damage to the vehicle. The ignition must also be in LOCK unless otherwise noted.

TABLE OF CONTENTS

Schematic and Routing Diagrams 9A-1
Wire Color Chart 9A-1
Power Distribution Schematic 9A-2
Connection Box Diagram 9A-4
Fuse Block Locator (Engine) 9A-4
Fuse Block Locator (Passenger Compartment) 9A-5
Fuse Block Electrical Connector 9A-5
Fuse Chart 9A-6
Rear Harness Routing 9A-8
Front Harness Routing 9A-9
Floor Harness Routing 9A-10
Instrument Harness Routing 9A-11
Door Harness Routing 9A-12

SCHEMATIC AND ROUTING DIAGRAMS

WIRE COLOR CHART

Wire Color	Abbreviation On Schematic
Green	DK GRN
Light Green	LT GRN
Blue	DK BLU
Brown	BRN
Orange	ORN
Yellow	YEL
Grey	GRY
Sky Blue	LT BLU
Red	RED
Black	BLK
Pink	PNK
White	WHT
Purple	PPL

Wires With Tracers

Wire Color	Abbreviation On Schematic
Red with White Tracer	RED/WHT

POWER DISTRIBUTION SCHEMATIC

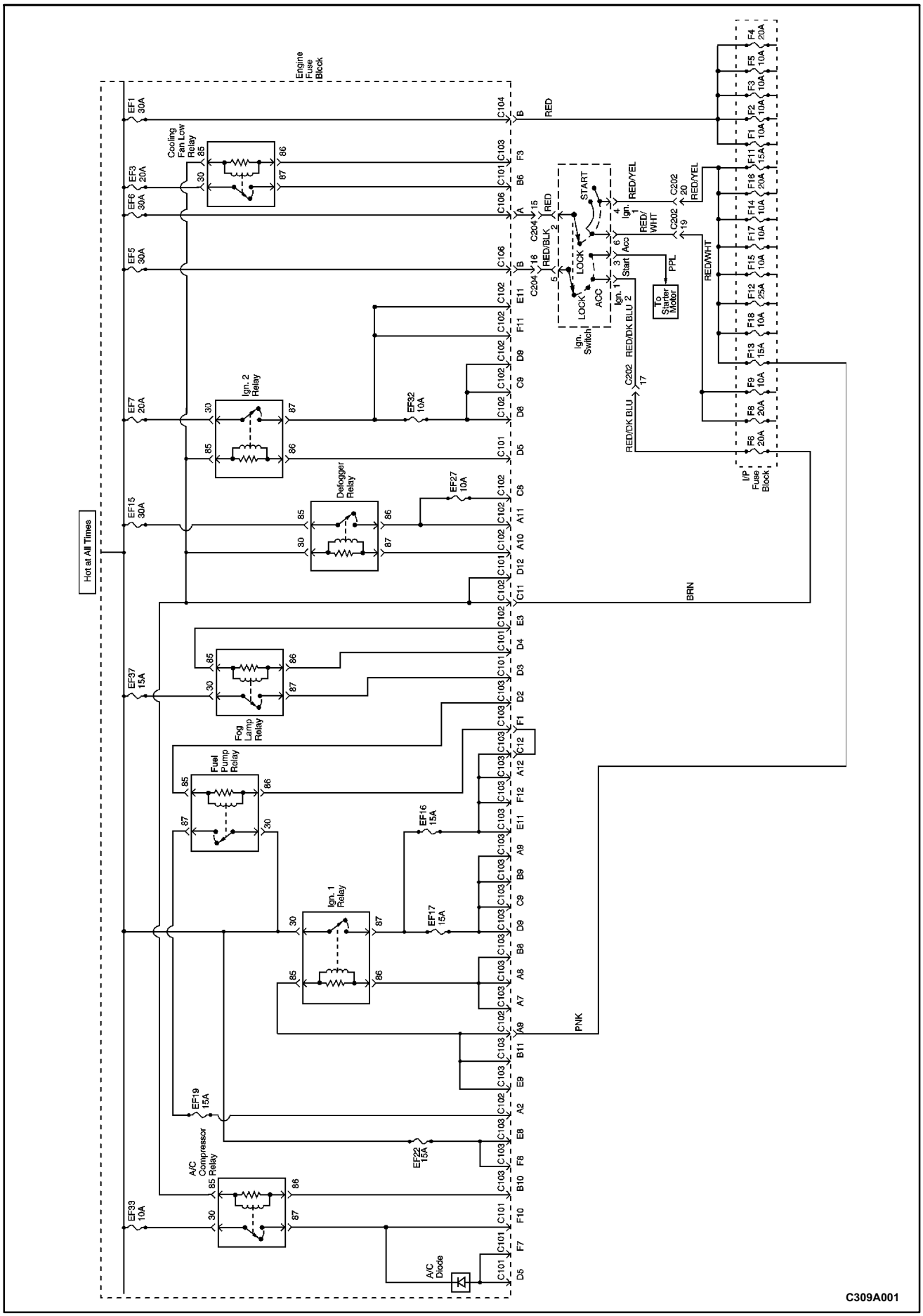

POWER DISTRIBUTION SCHEMATIC (Cont'd)

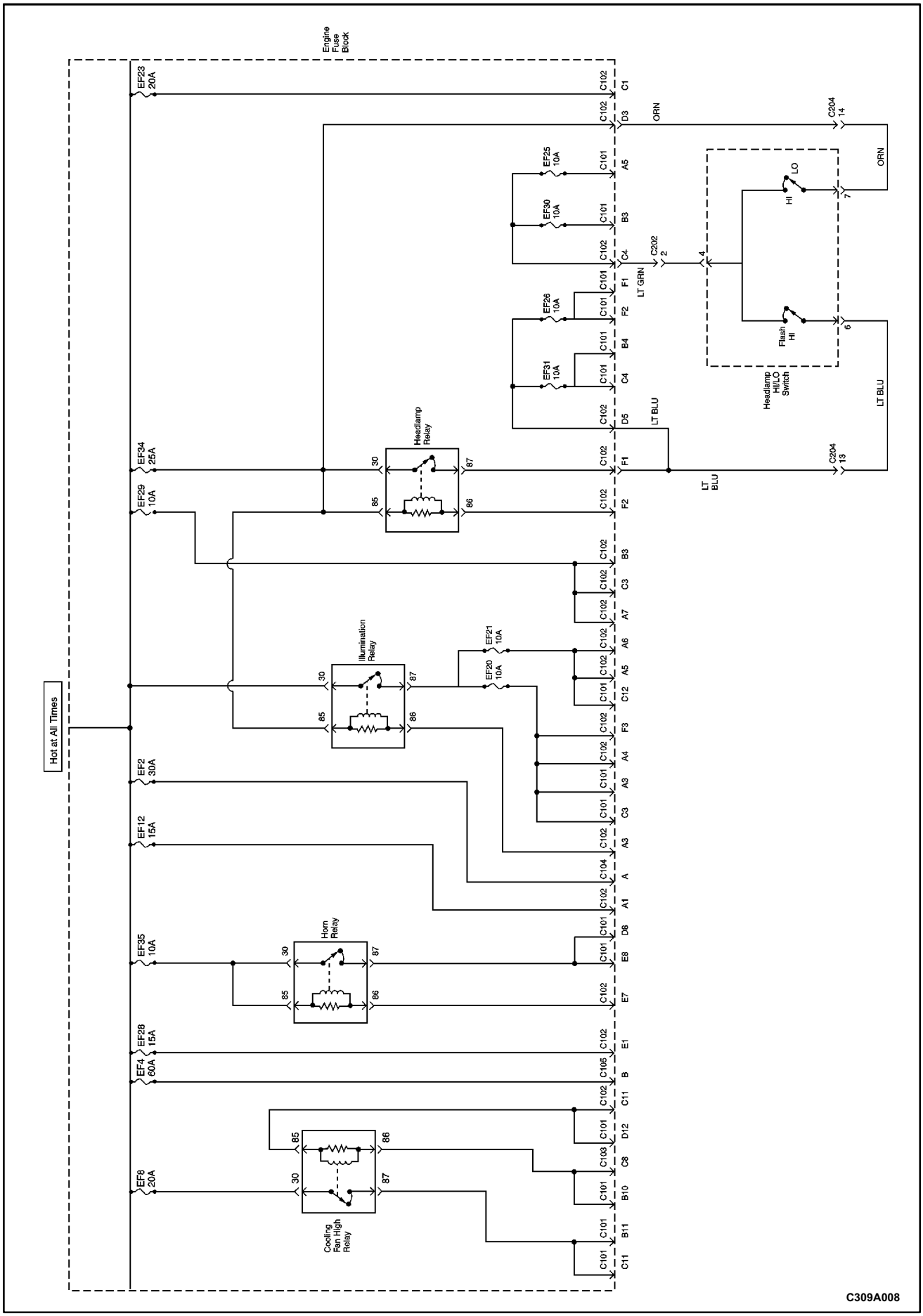

CONNECTION BOX DIAGRAM

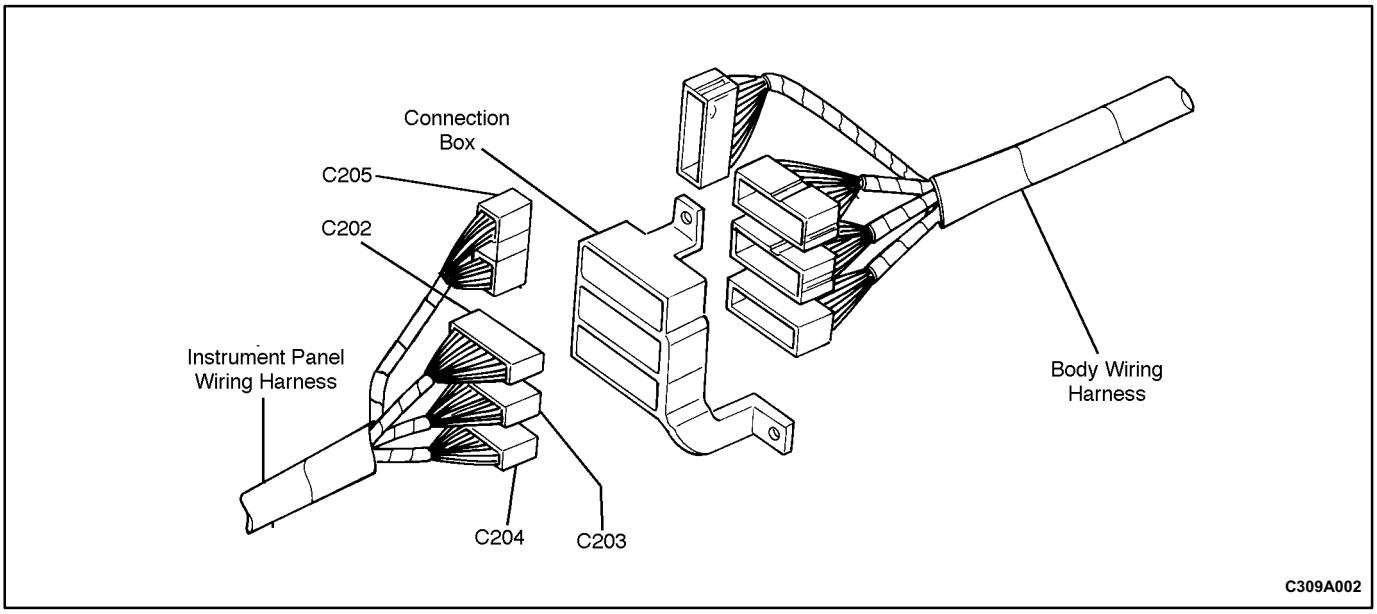

FUSE BLOCK LOCATOR (ENGINE)

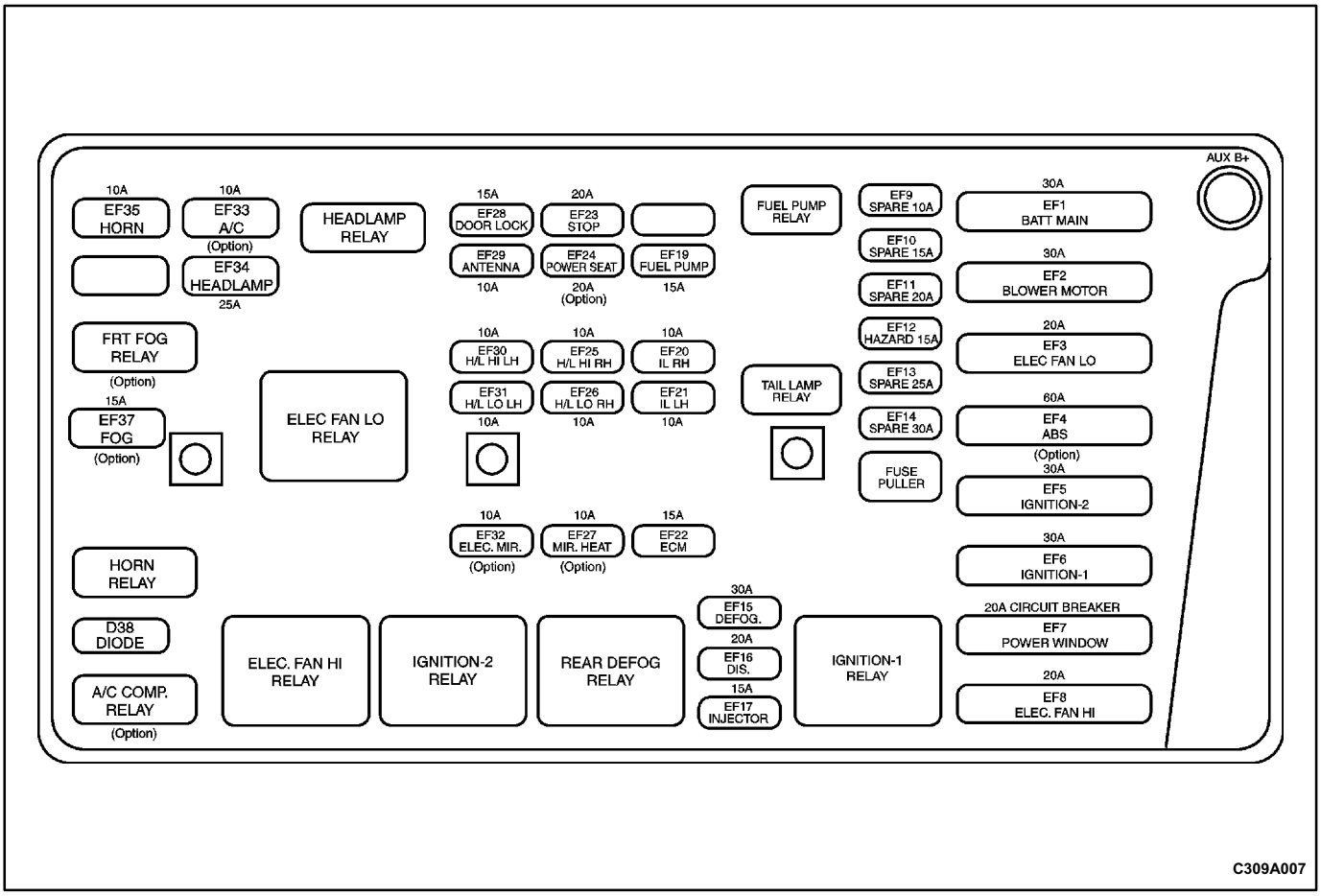

FUSE BLOCK LOCATOR (PASSENGER COMPARTMENT)

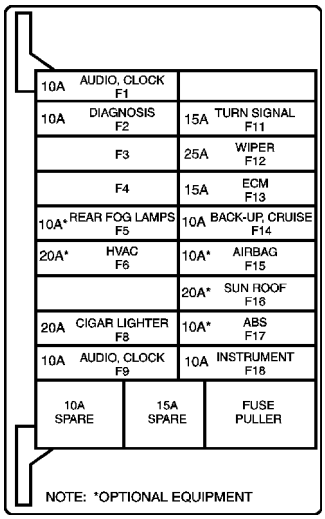

C309A003

FUSE BLOCK ELECTRICAL CONNECTOR

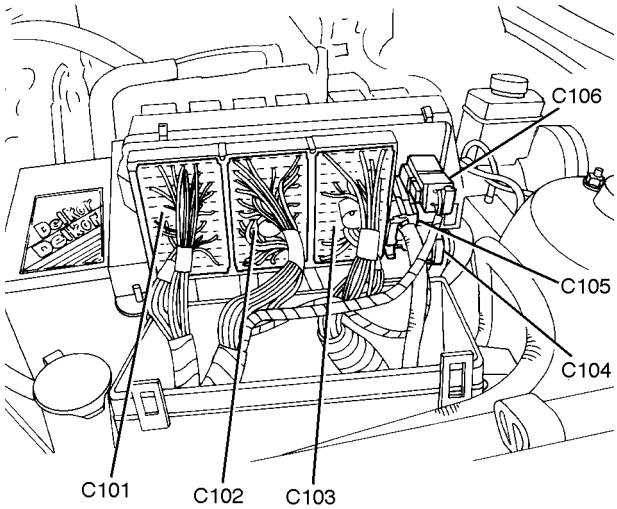

C109A007

FUSE CHART

Fuse	Rating/Source		Circuit
EF1 (Engine Fuse)	30A	BAT	Fuses F1, F2, F3, F5
EF2	30A	BAT	Blower Motor Relay, Blower Motor, Auto. Temp. Control Relay, ATC Controller
EF3	20A	BAT	Cooling Fan (Low) Relay, Aux. Cooling Fan, Cooling Fan Control Relay
EF4	60A	BAT	ABS Relay, Electronic Brake Control Module
EF5	30A	BAT	Ign 2 (Ign Key), Starter
EF6	30A	BAT	Ign 1 (Ign Key), F17, F18, ACC
EF7	20A	BAT	Ign 2 Relay, EF32, Keyless Entry System, Sun Roof, Power Window Main Switch
EF8	20A	BAT	Cooling Fan (High) Relay, Cooling Fan Control Relay, Main Cooling Fan
EF9	10A	-	Spare
EF10	15A	-	Spare
EF11	20A	-	Spare
EF12	15A	BAT	Hazard Switch
EF13	25A	-	Spare
EF14	30A	-	Spare
EF15	30A	BAT	Back Window Defogger, Defogger Relay, EF27
EF16	20A	BAT	Alternator Terminal F, Direct Ignition System Module, Fuel Pump Relay, Charcoal Canister Purge Solenoid, Engine Control Module
EF17	15A	BAT	Fuel Injectors, EGR Solenoid
EF18	-	-	Blank
EF19	15A	BAT	Fuel Pump, ALDL Connector E
EF20	10A	BAT	RH Parking Lamp, RH Position Lamp, RH Taillamp, Dimmer Control Switch, Chime Bell
EF21	10A	BAT	LH Parking Lamp, LH Position Lamp, LH Taillamp, License Lamp
EF22	15A	BAT	Engine Control Module
EF23	20A	BAT	Brake Switch, Brake Lamps, EBCM, Cruise Control, BTSI relay, BTSI Solenoid,
EF24	20A	BAT	Power seat, Power seat control switch
EF25	10A	EF12	Headlamp High LH
EF26	10A	EF12	Headlamp Low RH
EF27	10A	EF32	Electric Outside Rearview Mirror Defogger
EF28	15A	BAT	Auto Door Lock System
EF29	15A	BAT	Siren, Automatic Antenna, Ign Key Illumination, Trunk Lamp, Room Lamp, Door Step Lamp, Power Window Motor, Keyless Entry System Unit
EF30	10A	EF12	Headlamp High RH
EF31	10A	EF12	Headlamp Low LH
EF32	10A	EF7	Electric Outside Rearview Mirror Control, Map Lamp (W/O Sun Roof), Sun Roof Switch, Keyless Entry Unit
EF33	10A	BAT	A/C Compressor Relay, A/C Compressor, A/C Diode

FUSE CHART (Cont'd)

Fuse	Rating/Source		Circuit
EF34	25A	BAT	Headlamp Relay, EF30, EF25, EF31, EF26, High Beam Indicator Switch, Headlamp Switch, Illumination Relay
EF35	10A	BAT	Horn System
EF36	-	-	Blank
EF37	15A	BAT	Fog Lamp Relay, LH and RH Front Fog Lamps
F1□ (Fuse)	10A	EF1	Audio System, Clock, Key Remind Switch, Chime Bell, Ashtray Illum., Trunk Switch, Door Switch, ATC Controller
F2□	10A	EF1	ALDL
F3□	10A	EF1	Immobilizer
F5□	10A	EF1	Rear Fog Lamp Relay, Rear Fog Lamp
F6□	20A	EF5 (Ign 2)	Ign 2 Relay, Cooling Fan (High) Relay, Cooling Fan (Low) Relay, A/C Compressor Relay, A/C Switch, Cooling Fan Control Relay, ECM., Blower Motor Relay, Auto. Temp. Control Relay, Defogger Relay, ATC Controller
F8□	20A	EF6 (Acc)	Cigar Lighter, Glove Box Lamp, Glove Box Switch
F9□	10A	EF6 (Acc)	Audio System, Clock
F11	15A	EF6 (Ign 1)	Turn Signal/Hazard Switch
F12	25A	EF6 (Ign 1)	Wiper/Washer System
F13	15A	EF6 (Ign 1)	Engine Control Module, Ign 1 Relay, Vehicle Speed Sensor
F14	10A	EF6 (Ign 1)	Backup Switch, Backup Lamps, Defogger, ATC Controller, Seat Belt Switch
F15	10A	EF6 (Ign 1)	Supplemental Inflatable Restraint System
F16	20A	EF6 (Ign 1)	Sun Roof Module, Sun Roof Motor (if equipped)
F17	10A	EF6 (Ign 1)	Electronic Brake Control Module
F18	10A	EF6 (Ign 1)	Instrument Cluster, Chime Bell, Brake Switch, ATC. Controller, Vehicle Speed Sensor, ECM, Brake Transaxle Shift Interlock Solenoid, PRND Switch, Speed Sensitive Power Steering Module, Octane Switch Connector, EBCM

REAR HARNESS ROUTING

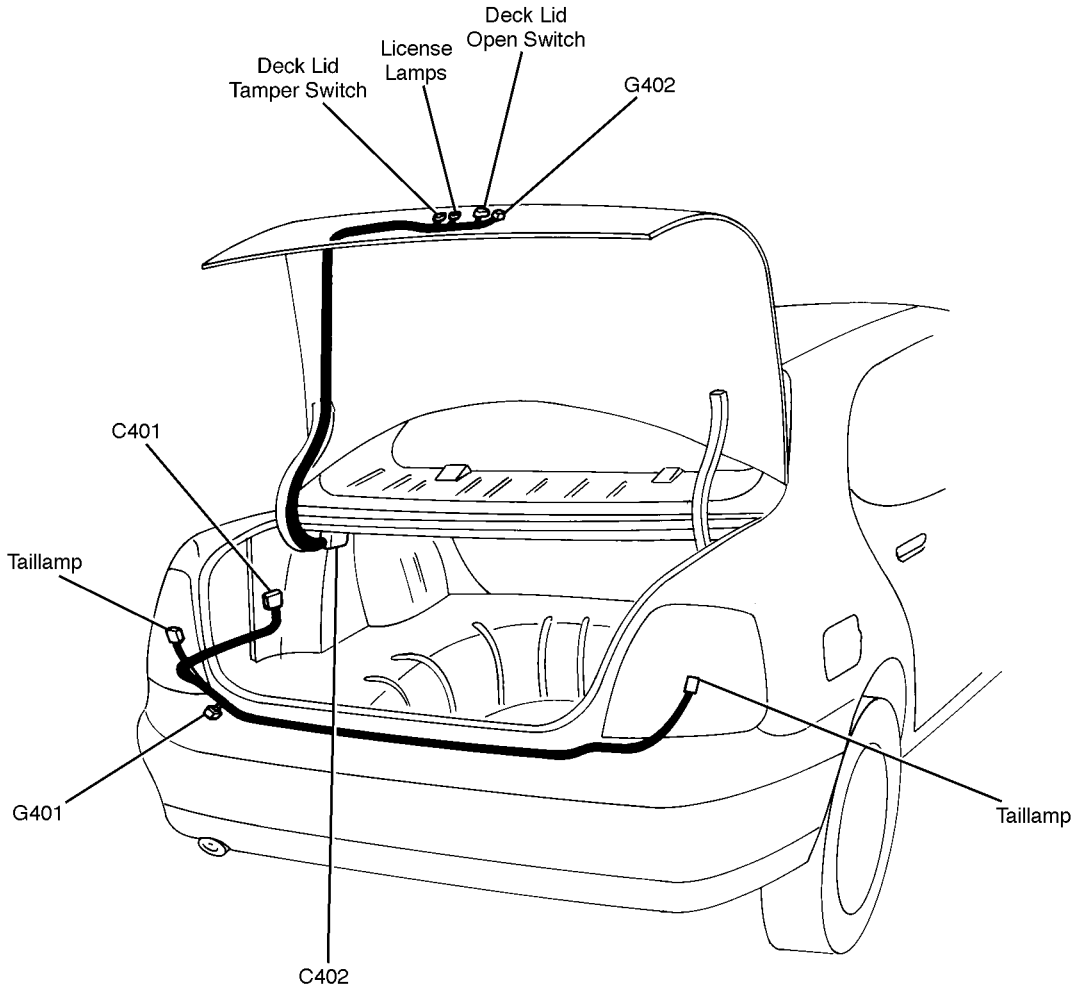

FRONT HARNESS ROUTING

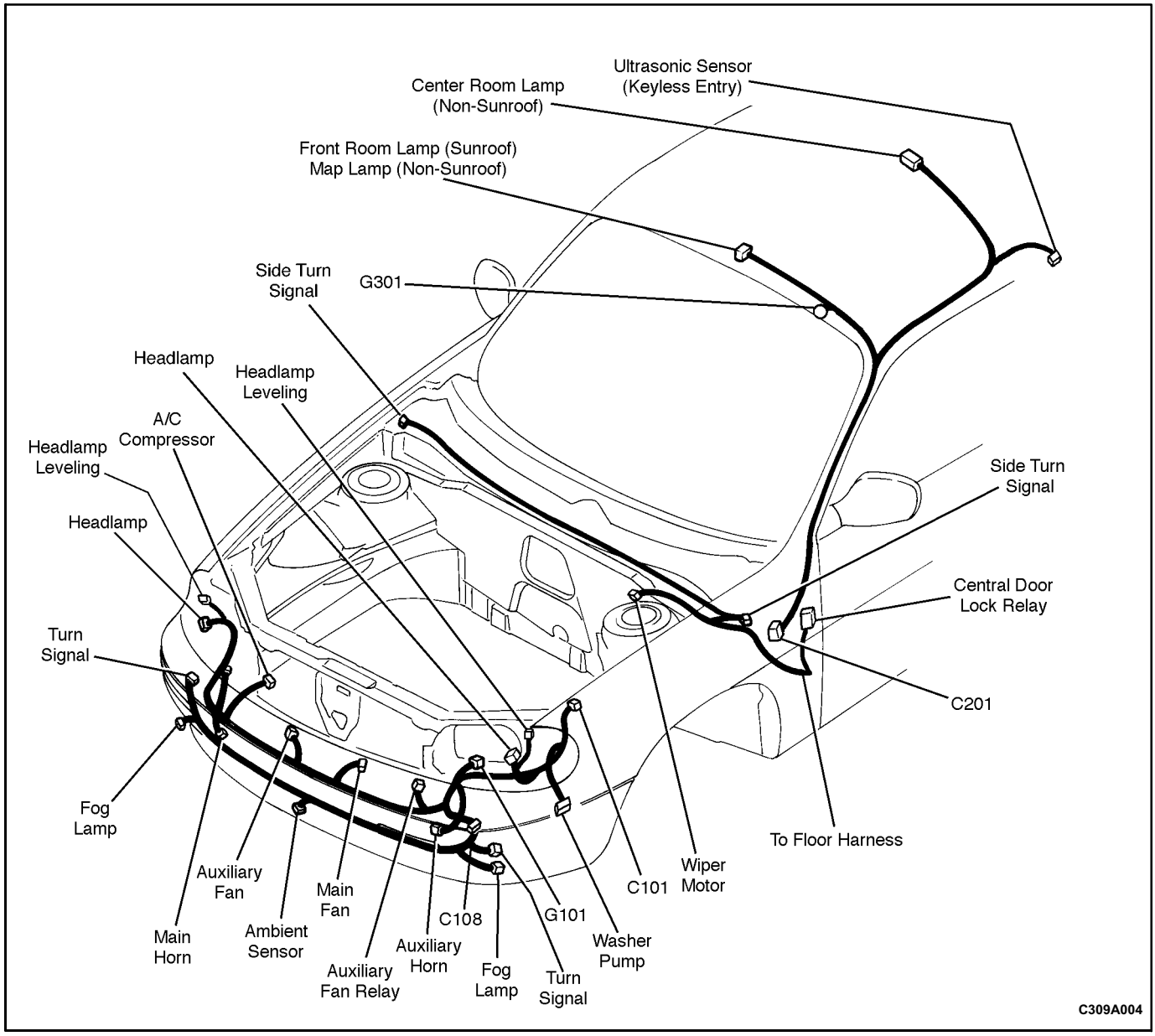

FLOOR HARNESS ROUTING

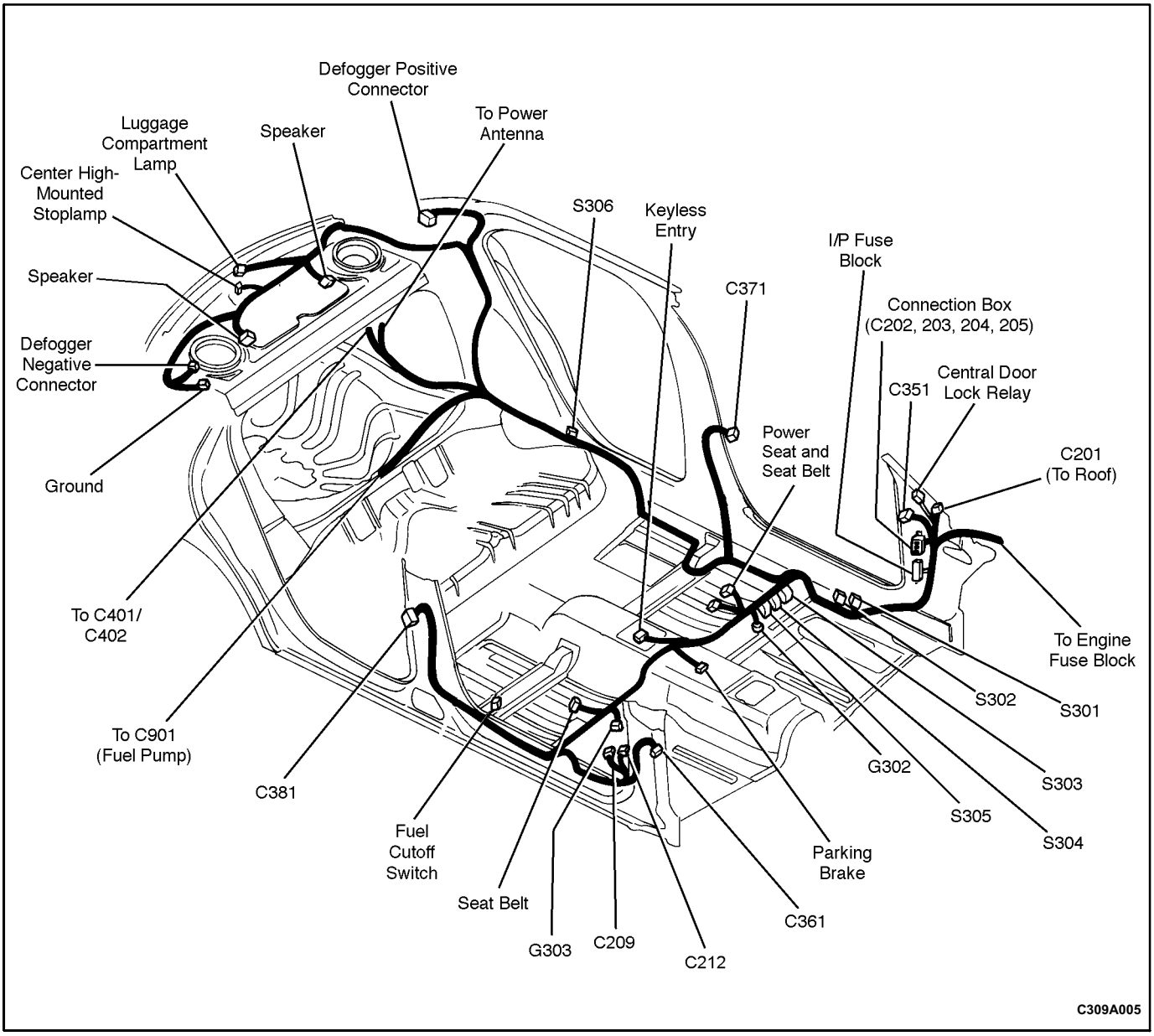

INSTRUMENT HARNESS ROUTING

((Left-Hand Drive Shown, Right-Hand Drive Similar)

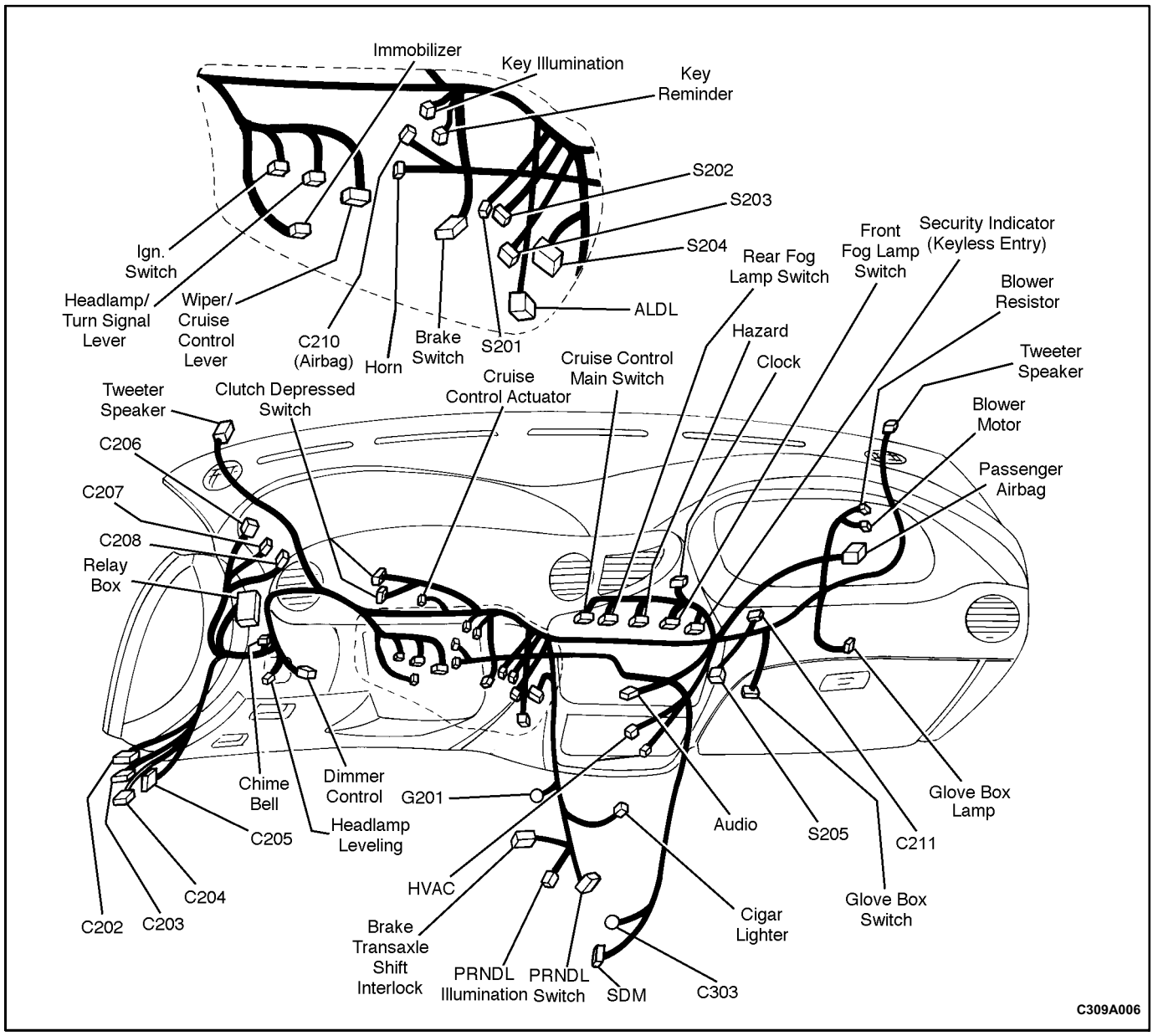

DOOR HARNESS ROUTING

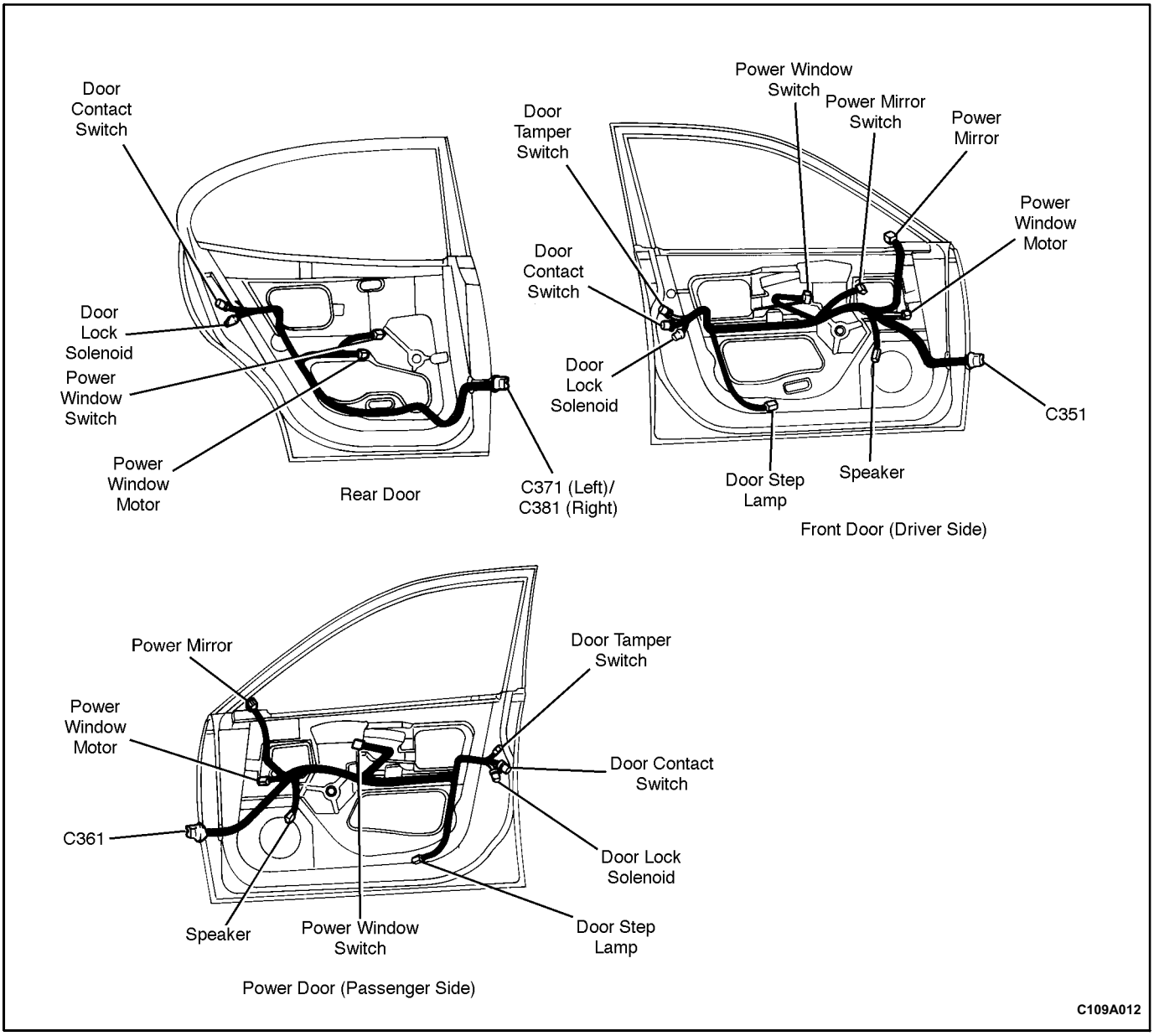

SECTION 9B

LIGHTING SYSTEMS

CAUTION: Disconnect the negative battery cable before removing or installing any electrical unit or when a tool or equipment could easily come in contact with exposed electrical terminals. Disconnecting this cable will help prevent personal injury and damage to the vehicle. The ignition must also be in LOCK unless otherwise noted.

TABLE OF CONTENTS

Specifications 9B-2
Bulb Usage Chart 9B-2
Fastener Tightening Specifications 9B-2
Schematic and Routing Diagrams 9B-3
Headlamps-On Reminder Chime 9B-3
Headlamps Circuit 9B-4
Headlamp Leveling Circuit 9B-5
Fog Lamps Circuit 9B-6
Rear Fog Lamps Circuit 9B-7
Marker, Tail, and License Lamps Circuit 9B-8
Stoplamps and Backup Lamps Circuit 9B-9
Turn and Hazard Lamps Circuit 9B-10
Interior Courtesy and Luggage Compartment Lamps Circuit 9B-11
Door Step Lamps Circuit 9B-12
Glove Box Lamp Circuit 9B-13
Ashtray Lamp and Cigar Lighter Circuit 9B-14
Diagnosis 9B-15
Headlamps-On Reminder Chime 9B-15
Headlamps 9B-16
Headlamp Leveling 9B-19
Fog Lamps 9B-21
Tail/Stop/Turn Backup Lamps 9B-24
Interior Courtesy and Luggage Compartment Lamps 9B-31
Door Step Lamps 9B-35
Glove Box Lamp 9B-36
Ashtray Lamp 9B-37
Cigar Lighter 9B-38
Maintenance and Repair 9B-39
On-Vehicle Service 9B-39
Headlamps 9B-39
Parking and Front Turn Signal Lamps 9B-41
Side Turn Signal Lamps 9B-41
Rear Combination Lamps 9B-42
Center High-Mounted Stoplamp 9B-43
Front Fog Lamps 9B-43
License Plate Lamps 9B-45
Interior Courtesy Lamp 9B-45
Ignition Switch Keyhole Lamp 9B-47
Front Door Step Lamp 9B-48
Vanity Mirror Lamp 9B-49
Glove Box Lamp 9B-50
Ashtray Lamp 9B-51
Cigar Lighter Lamp 9B-52
Luggage Compartment Lamp 9B-53
General Description and System Operation 9B-55
Headlamps-On Reminder 9B-55
Headlamps 9B-55
Parking and Turn Signal Lamps 9B-55
Fog Lamps 9B-55
Rear Combination Lamps 9B-55
Center High-Mounted Stoplamp 9B-55
Backup Lamps 9B-55
License Plate Lamps 9B-55
Interior Courtesy Lamp 9B-56
Illuminated Vanity Mirrors 9B-56
Ashtray Lamp and Cigar Lighter 9B-56
Luggage Compartment Lamp 9B-56
Headlamp Leveling 9B-56

SPECIFICATIONS

BULB USAGE CHART

Bulb	Replacement Bulb Number
Ashtray Lamp	1.2W
Backup Lamp	21 or 27W
Center High-Mounted Stoplamp	21 or 27W
Cigar Lighter Lamp	5W
Front Door Step Lamp	5W
Front Fog Lamp	55W
Glove Box Lamp	5W
Headlamp	60 / 55W
Ignition Switch Keyhole Lamp	5W
Interior Courtesy Lamp	10W
License Plate Lamp	5W
Luggage Compartment Lamp	10W
Map Lamp	7.5W
Parking and Front Turn Signal Lamp	Double 8 or 21/5W
Rear Fog Lamp	27W
Tail/Stop/Turn Lamps	Double 8 or 21/5W
Vanity Mirror Lamp	3.5W

FASTENER TIGHTENING SPECIFICATIONS

Application	N•m	Lb•Ft	Lb•In
Ashtray Housing Screws	2	-	18
Center High-Mounted Stoplamp Nuts	4	-	35
Front Door Trim Panel Screws	3.5	-	31
Front Fog Lamp Assembly Nuts	4	-	35
Front Turn Signal Lamp Screws	2	-	18
Headlamp Assembly Bolts	4	-	35
Ignition Switch Keyhole Lamp Screw	1.5	-	13
Interior Courtesy Lamp Housing Screw	2	-	18
License Plate Lamp Assembly Screws	2	-	18
Rear Combination Lamp Assembly Nuts	2	-	18
Steering Column Trim Cover Screws	-	-	-

SCHEMATIC AND ROUTING DIAGRAMS

HEADLAMPSON REMINDER CHIME CIRCUIT

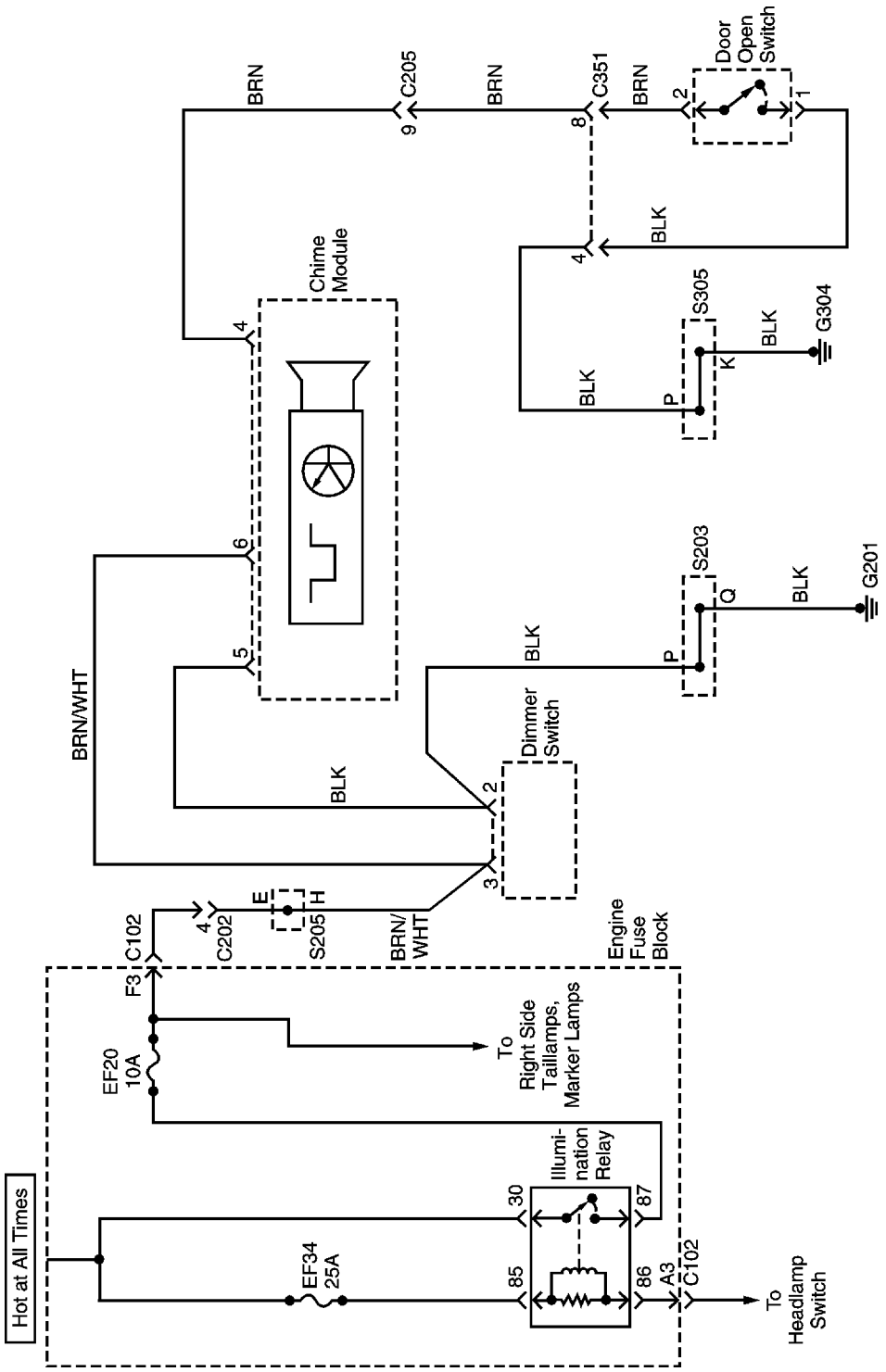

C309B009

HEADLAMPS CIRCUIT

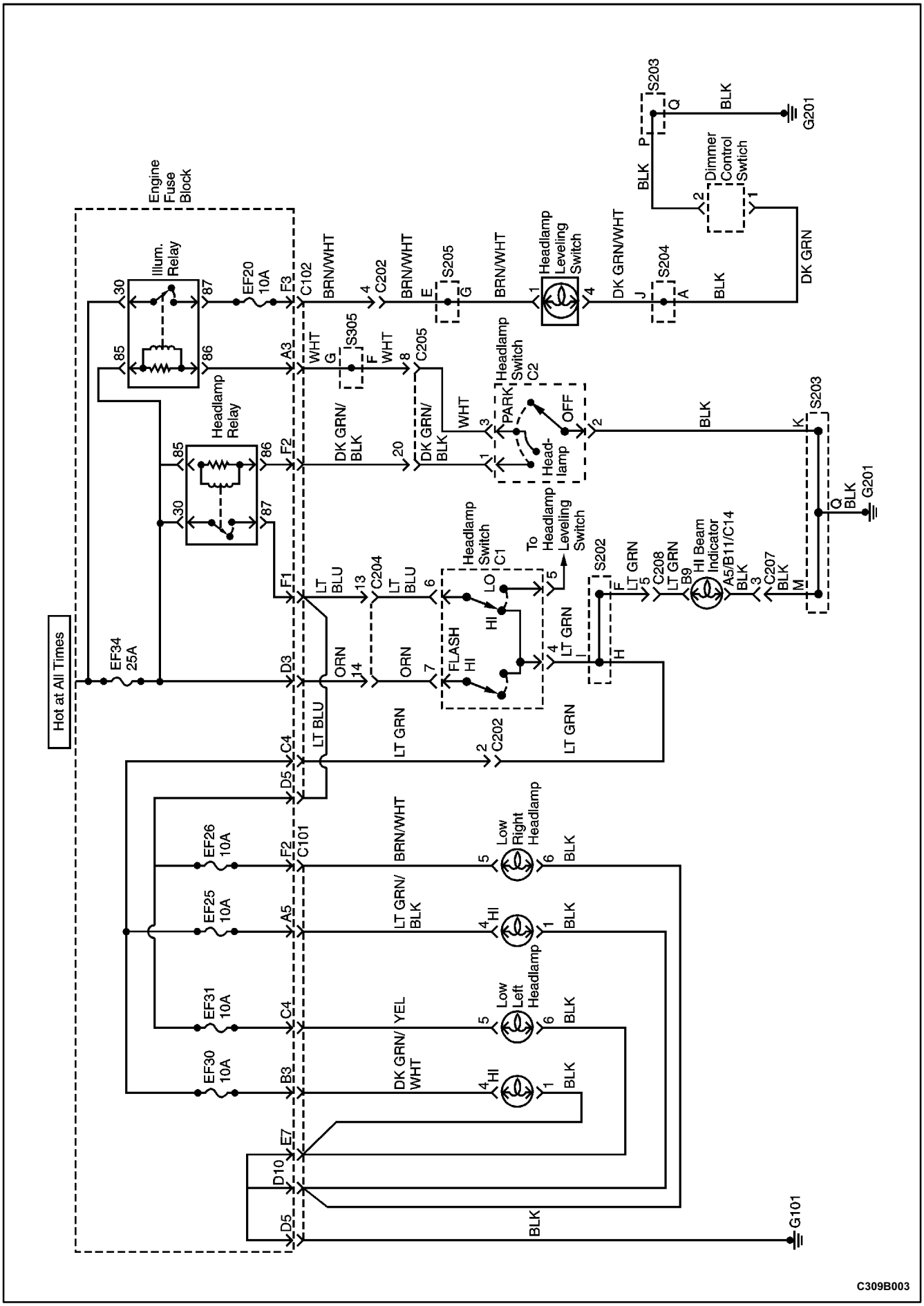

HEADLAMP LEVELING CIRCUIT

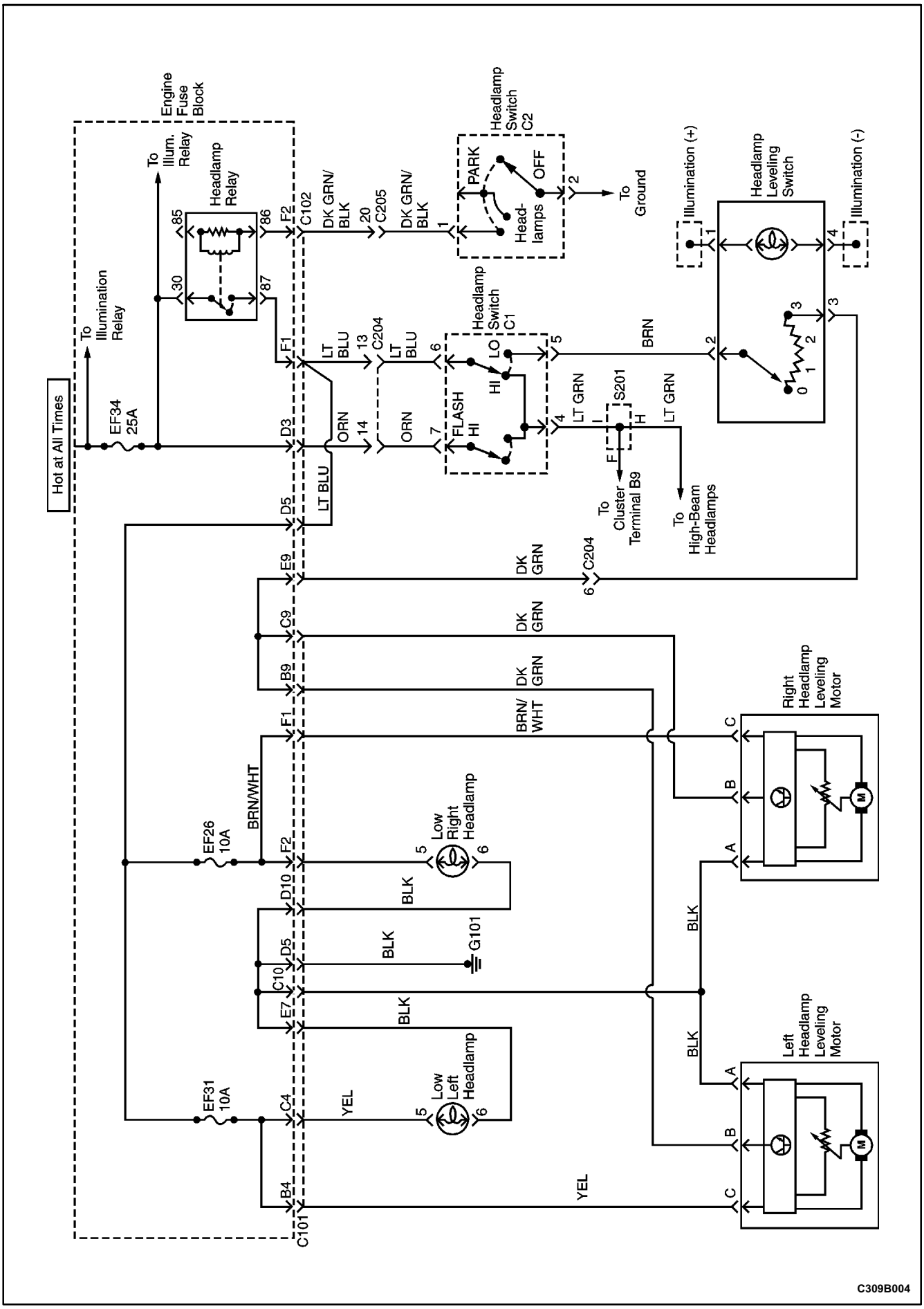

FRONT FOG LAMPS CIRCUIT

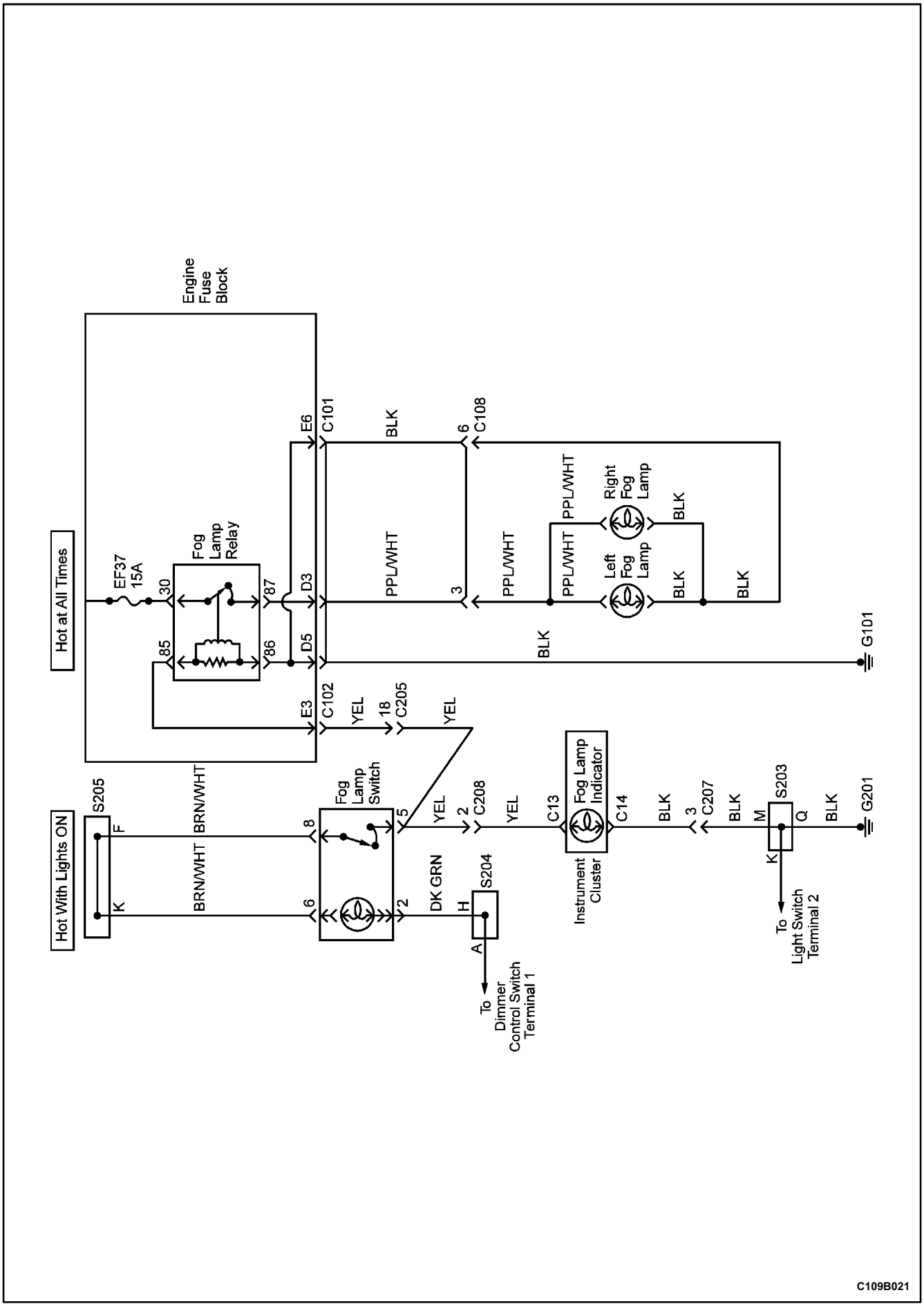

REAR FOG LAMPS CIRCUIT

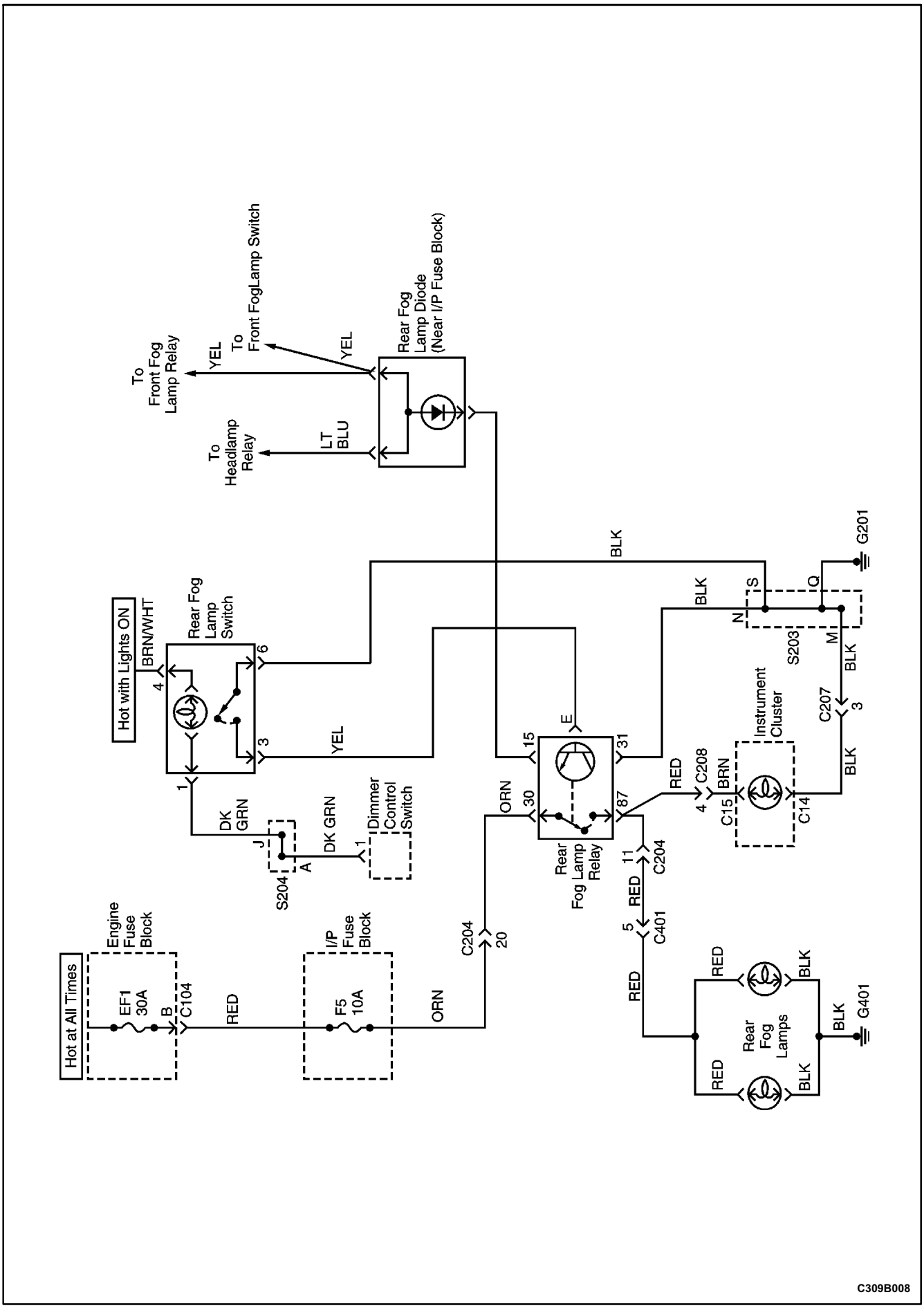

MARKER, TAIL, AND LICENSE LAMPS CIRCUIT

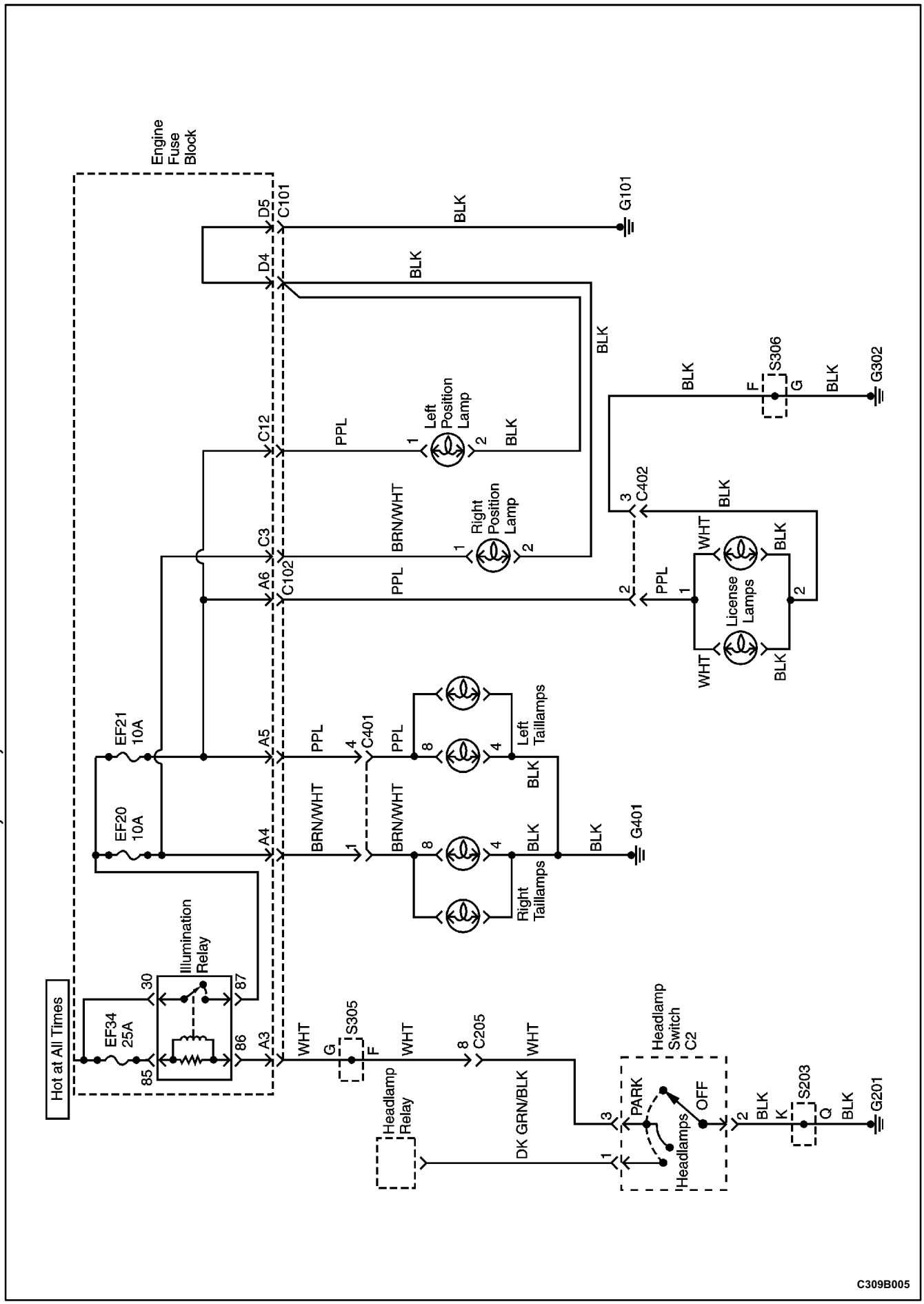

STOPLAMPS AND BACKUP LAMPS CIRCUIT

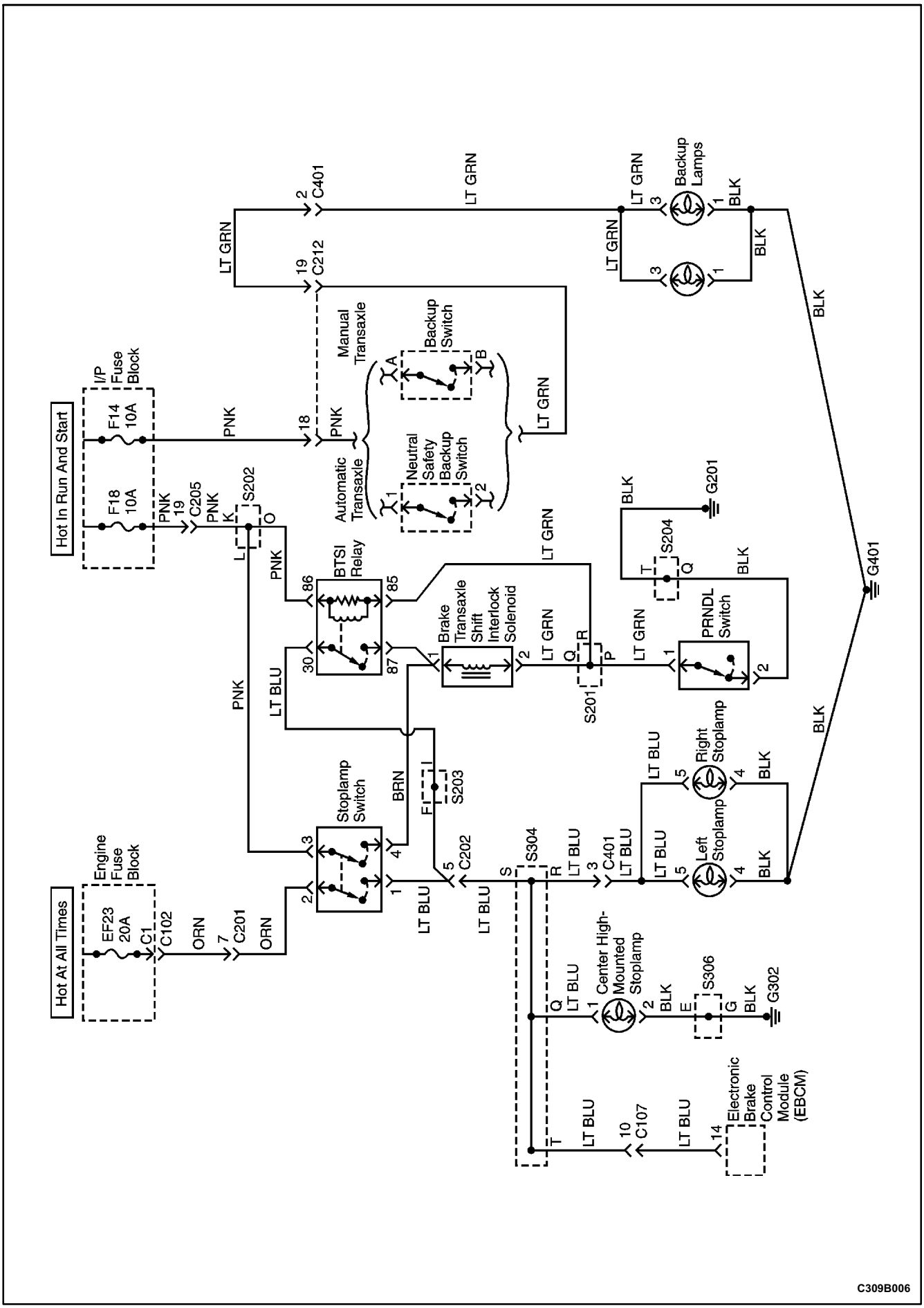

TURN AND HAZARD LAMPS CIRCUIT

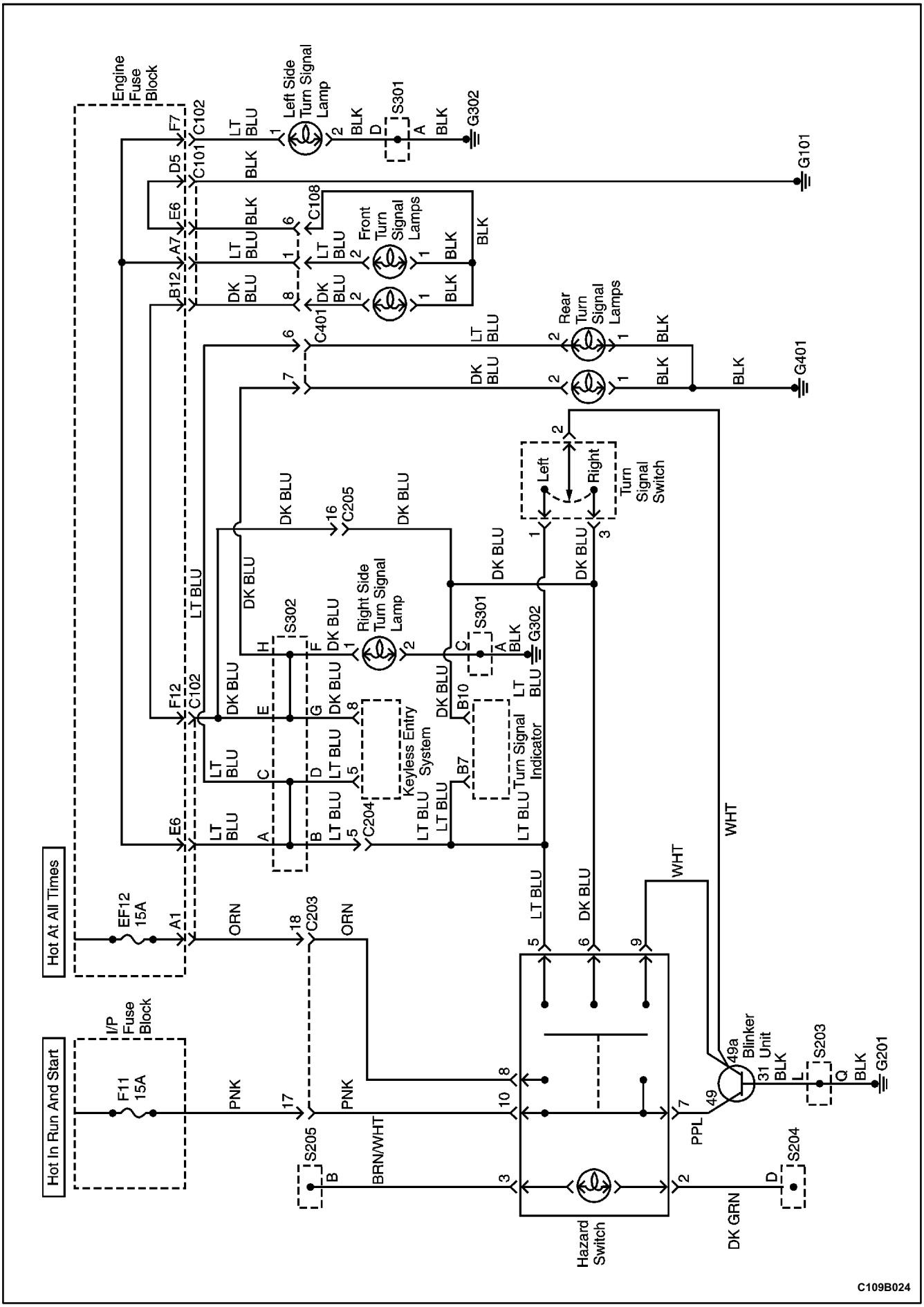

C109B024

INTERIOR COURTESY AND LUGGAGE COMPARTMENT LAMPS CIRCUIT

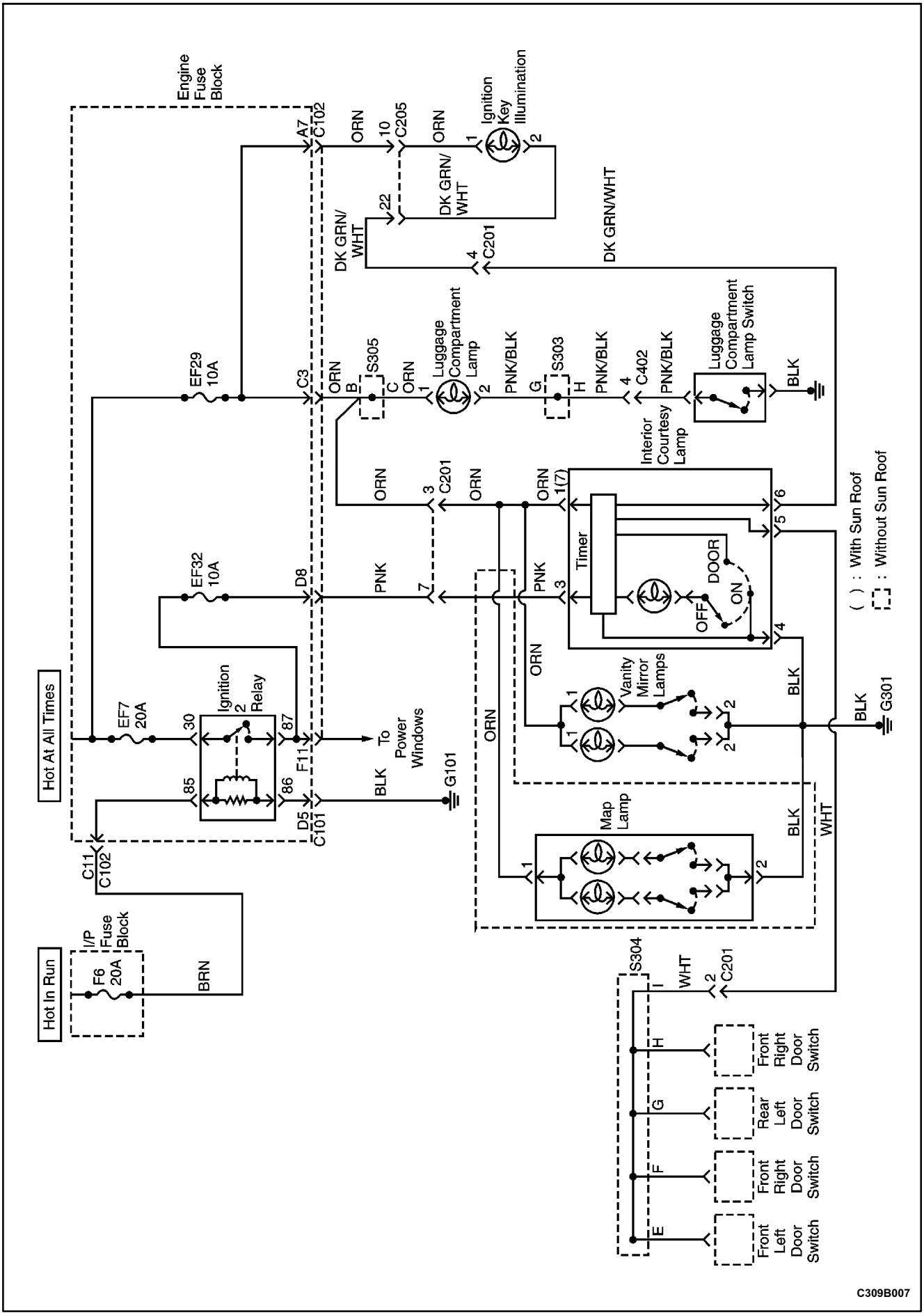

DOOR STEP LAMPS CIRCUIT

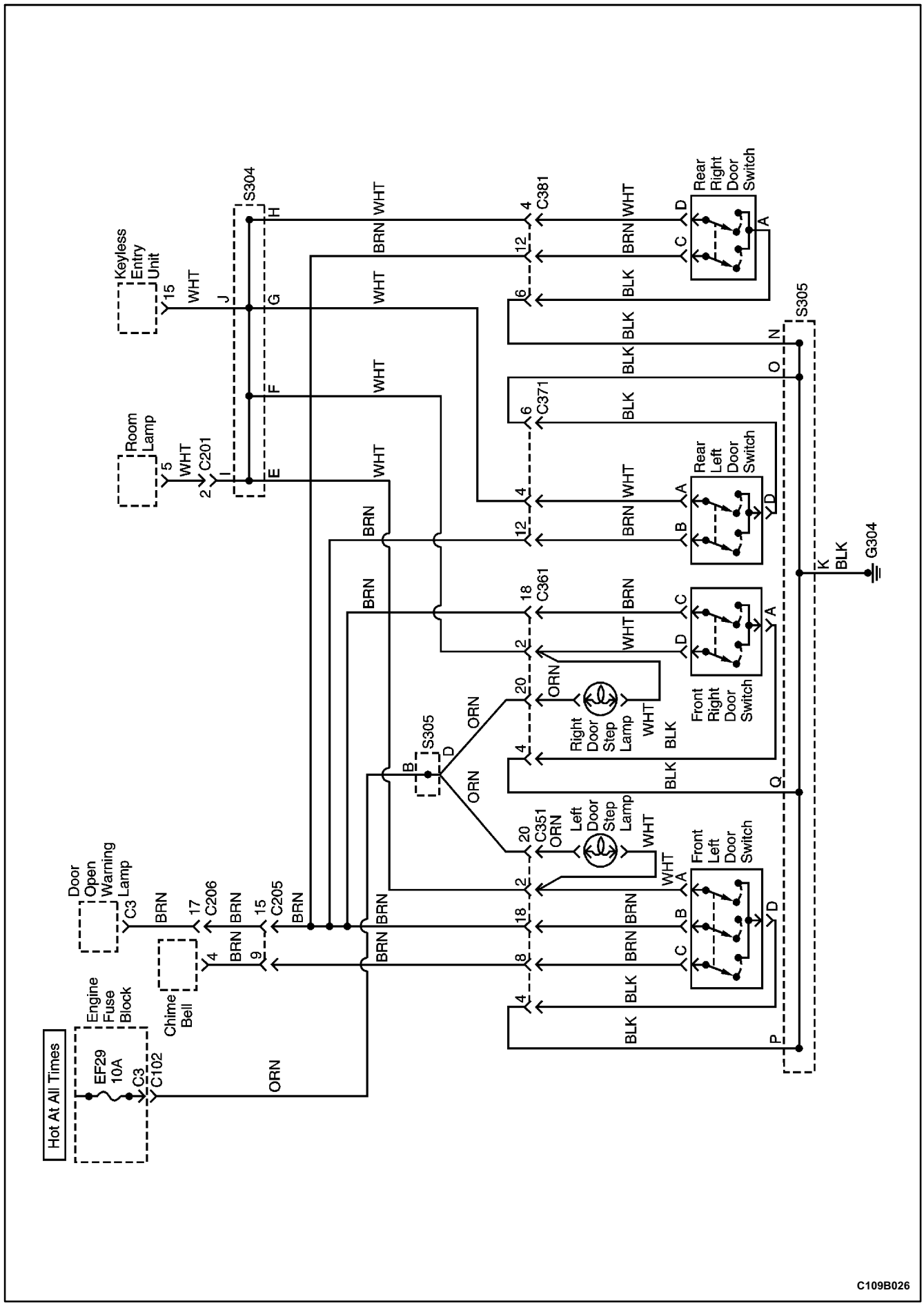

GLOVE BOX LAMP CIRCUIT

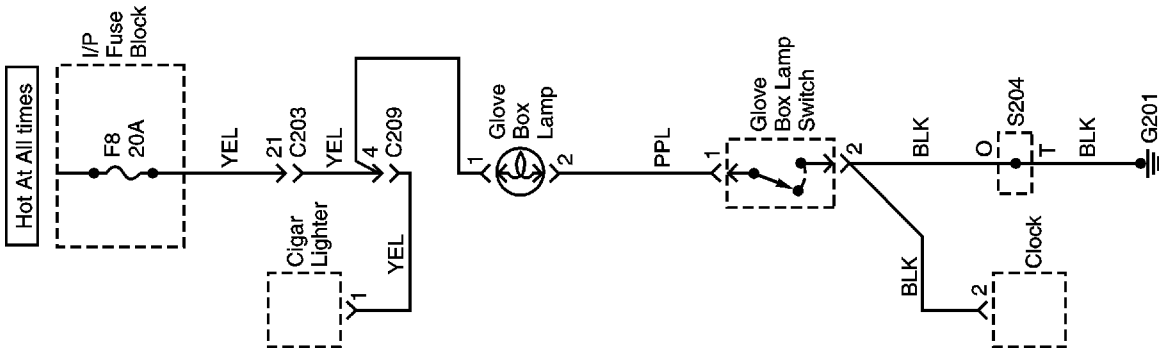

C109B027

ASHTRAY LAMP AND CIGAR LIGHTER CIRCUIT

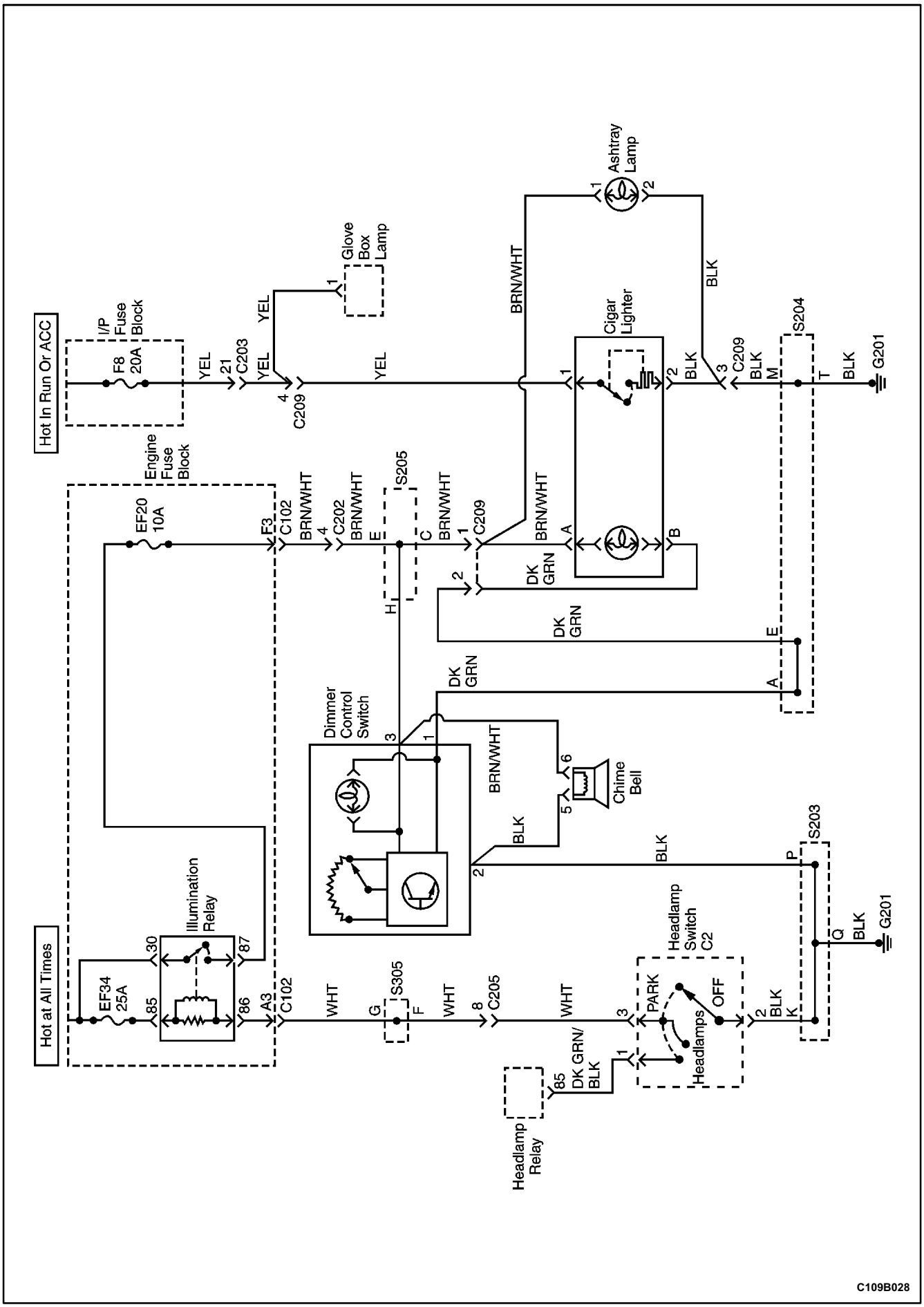

C109B028

DIAGNOSIS

HEADLAMPS-ON REMINDER CHIME

Diagnostic Aids

Fuse EF20 controls the instrument cluster lighting and the right side taillamps, parking lamps, and marker lamps. It also provides the input to the chime module for the lighting reminder.

Test Description

The number(s) below refer to step(s) on the diagnostic table.

3. The chime module is under the instrument panel on the left side.

Headlamps Reminder Chime Is Inoperative

Step	Action	Value(s)	Yes	No
1	1. Turn the parking lamps and the taillamps ON. 2. Verify that the parking and taillamps are working on the right side of the vehicle. Are the parking lamps and taillamps working on the right side of the vehicle?	-	Go to *Step 3*	Go to *Step 2*
2	Repair the parking lamps and the taillamps before completing this diagnostic table. Does the headlamps reminder chime work after the parking lamps and the taillamps have been repaired?	-	System OK	Go to *Step 3*
3	1. Disconnect the chime module electrical connector. 2. Turn the headlamps ON. 3. Check the voltage at terminal 6 of the chime module connector. Is the voltage equal to the specified value?	11-14 V	Go to *Step 7*	Go to *Step 4*
4	1. Remove the headlamp leveling and dimmer switch from the instrument panel for testing, but do not disconnect the electrical connector. 2. Turn the headlamps ON. 3. Check the voltage at the BRN/WHT wire at the dimmer switch connector (3-pin connector). Is the voltage equal to the specified value?	11-14 V	Go to *Step 5*	Go to *Step 6*
5	Repair the open BRN/WHT wire between the dimmer switch connector and the chime module connector. Is the repair complete?	-	System OK	-
6	Repair the open circuit between fuse EF20 and the dimmer switch. Is the repair complete?	-	System OK	-
7	Use an ohmmeter to check the continuity between ground and terminal 5 of the chime module connector. Does the ohmmeter indicate the specified value?	≈ 0 Ω	Go to *Step 9*	Go to *Step 8*
8	Repair the open circuit between ground and terminal 5 of the chime module connector. Is the repair complete?	-	System OK	-
9	1. Open the driver door. 2. Connect an ohmmeter between ground and terminal 4 of the chime module connector. Does the ohmmeter indicate the specified value?	≈ 0 Ω	Go to *Step 11*	Go to *Step 10*

Headlamps Reminder Chime Is Inoperative (Cont'd)

Step	Action	Value(s)	Yes	No
10	Repair the open circuit between ground and terminal 4 of the chime module connector. (The door open switch should be closed when the door is open.) Is the repair complete?	-	System OK	-
11	Replace the chime module. Is the repair complete?	-	System OK	-

HEADLAMPS

Low-Beam Headlamps Are Inoperative, High-Beam Headlamps Are OK

Step	Action	Value(s)	Yes	No
1	Check fuses EF26 (left side headlamps) and EF31 (right side headlamps). Are fuses EF26 or EF31 blown?	-	Go to *Step 2*	Go to *Step 3*
2	1. Check for a short circuit and repair if necessary. 2. Replace the fuse. Is the repair complete?	-	System OK	-
3	Check the voltage at fuses EF26 and EF31. Does the voltage available at fuses EF26 and EF31 equal the value specified?	11-14 V	Go to *Step 4*	Go to *Step 9*
4	1. Disconnect both headlamp connectors. 2. Turn the headlamps on. 3. Select the low beams. Does the voltage at each headlamp connector terminal 5 equal the value specified?	11-14 V	Go to *Step 6*	Go to *Step 5*
5	Repair the open circuit between fuses EF26 or EF31 and the low beam headlamps. Is the repair complete?	-	System OK	-
6	1. Disconnect the headlamp connectors. 2. Connect an ohmmeter between ground and either headlamp connector terminal 1. Is the resistance equal to the value specified?	0 Ω	Go to *Step 8*	Go to *Step 7*
7	Repair the ground circuit. Is the repair complete?	-	System OK	-
8	Replace the faulty headlamps. Is the repair complete?	-	System OK	-
9	Check the voltage between fuses EF31 or EF26 and the headlamp relay. Does the voltage available at fuses EF31 and EF26 equal the specified value?	11-14 V	System OK	Go to *Step 10*
10	Repair the open circuit between fuses EF31 and EF26 and the headlamp relay. Is the repair complete?	-	System OK	-

High-Beam Headlamps Are Inoperative, Low-Beam Headlamps Are OK

Step	Action	Value(s)	Yes	No
1	1. Turn the high-beam headlamps on. 2. Check the voltage at headlamp switch C1 terminal 6 with high beams selected. Does the voltage available at the headlamp switch C1 terminal 6 equal the value specified?	11-14 V	Go to *Step 3*	Go to *Step 2*
2	Repair the open circuit between fuse EF34 and the headlamp switch C1. Is the repair complete?	-	System OK	-
3	Check fuses EF30 and EF25. Is fuse EF30 or EF25 blown?	-	Go to *Step 4*	Go to *Step 5*
4	1. Check for a short circuit. Repair it if necessary. 2. Replace the fuse. Is the repair complete?	-	System OK	-
5	1. Disconnect the headlamp switch. 2. Put the switch in the high-beam position. 3. Use an ohmmeter to check the continuity of the headlamp switch C1 between terminals 6 and 4. Does the ohmmeter indicate the specified value?	0 Ω	Go to *Step 7*	Go to *Step 6*
6	Replace the headlamp switch. Is the repair complete?	-	System OK	-
7	1. Disconnect the high-beam headlamp connectors. 2. Turn the high-beam headlamps on. 3. Use a voltmeter to check the voltage at terminal 4 of the headlamp connectors. Does the voltmeter indicate the specified value?	11-14 v	Go to *Step 9*	Go to *Step 8*
8	Repair the open circuit between the fuse block and the high-beam headlamps. Is the repair complete?	-	System OK	-
9	Use an ohmmeter to check continuity between terminal 6 of the headlamp connectors and ground. Does the ohmmeter indicate the specified value?	≈ 0 Ω	Go to *Step 11*	Go to *Step 10*
10	Repair the open ground circuit. Is the repair complete?	-	System OK	-
11	Replace the faulty high-beam headlamps. Is the repair complete?	-	System OK	-

HighBeam and Low-Beam Headlamps Are Inoperative on Both Left and Right Sides

Diagnostic Aids: If there are several other systems inoperative with the ignition ON, such as power windows, power seats, sunroof, and front turn signals, check ground G101.

Step	Action	Value(s)	Yes	No
1	Check fuses EF34, EF30, EF25, EF31, and EF26. Are any fuses blown?	-	Go to *Step 2*	Go to *Step 3*
2	1. Check for a short circuit and repair if necessary. 2. Replace the blown fuse. Is the repair complete?	-	System OK	-
3	Use a voltmeter to check voltage at EF 34 . Does the voltmeter indicate the specified value?	11-14 V	Go to *Step 5*	Go to *Step 4*
4	Repair the open power supply circuit to fuses EF34. Is the repair complete?	-	System OK	-
5	Turn the headlamps ON. Are the parking lamps, taillamps, and license lamps working?	-	Go to *Step 6*	Go to *Step 8*
6	Temporarily substitute the illumination relay in place of the headlamp relay. Do the headlamps operate with the substituted relay?	-	Go to *Step 7*	Go to *Step 8*
7	1. Reinstall the illumination relay in its original position. 2. Replace the headlamp relay. Is the repair complete?	-	System OK	-
8	1. Disconnect the headlamp connectors, and use an ohmmeter to check continuity between terminals 1 and 6 and ground. Repeat this procedure on the other side. 2. Connect the headlamp connectors. Does the ohmmeter indicate the specified value between each terminal and ground?	≈ 0 Ω	Go to *Step 10*	Go to *Step 9*
9	Repair the open circuit between the headlamps and ground. Is the repair complete?	-	System OK	-
10	1. Disconnect headlamp switch connector C2. 2. Turn the headlamps ON. 3. Using a voltmeter, check voltage at headlamps switch connector C2 terminal 1 (harness side). Is the voltage equal to the specified value?	11-14 V	Go to *Step 12*	Go to *Step 11*
11	Repair the open circuit between fuse EF34 and the headlamp switch C2. Is the repair complete?	-	System OK	-
12	Use an ohmmeter to check continuity between headlamp switch connector C2, terminal 2 (harness side) and ground. Did the ohmmeter indicate the specified value?	≈ 0 Ω	Go to *Step 14*	Go to *Step 13*
13	Repair the open circuit between headlamp switch connector C2 and ground. Is the repair complete?	-	System OK	-
14	Replace the headlamp switch. Is the repair complete?	-	System OK	-

HEADLAMP LEVELING

Test Description

The number(s) below refer to step(s) on the diagnostic table.

9. The headlamp leveling switch can be removed for testing if the driver side instrument panel cover is carefully pulled loose from its retaining clips. By reaching behind the loosened trim panel, the retaining tabs for the headlamp leveling and dimmer switch can be pressed to release the switch from the instrument panel.

Headlamp Leveling Is Inoperative

Step	Action	Value(s)	Yes	No
1	Check the high- and the low-beam headlamps. Do the high- and the low-beam headlamps work?	-	Go to *Step 3*	Go to *Step 2*
2	Repair the high- and the low-beam headlamps before completing this diagnostic table. Does the leveling system operate after the headlamps have been repaired?	-	System OK	Go to *Step 3*
3	1. Disconnect the connector at the inoperative headlamp leveling motor. 2. Turn the low-beam headlamps ON. 3. Check the voltage at the YEL wire at the left headlamp leveling motor connector (or the BRN/WHT wire at the right headlamp leveling motor connector). Does the voltmeter indicate the specified value?	11-14 V	Go to *Step 5*	Go to *Step 4*
4	Repair the open circuit between the low-beam headlamp and the headlamp leveling motor. Is the repair complete?	-	System OK	-
5	Use an ohmmeter to check continuity between the BLK wire at the headlamp leveling motor connector and ground. Does the ohmmeter indicate the specified value?	≈ 0 Ω	Go to *Step 7*	Go to *Step 6*
6	Repair the open circuit between the headlamp leveling motor connector and ground. Is the repair complete?	-	System OK	-
7	1. Turn the low beam headlamps ON. 2. At the headlamp leveling motor connector, check the voltage while the leveling adjustment is changed from „0” to „3” on the leveling switch. Does the voltage change smoothly and match the values specified?	11-14 V at position „0” to 4.5 V at position „3”	Go to *Step 8*	Go to *Step 9*
8	Replace the headlamp leveling motor. Is the repair complete?	-	System OK	-
9	1. Remove the headlamp leveling switch for testing, but do not disconnect the electrical connector. 2. Turn the low-beam headlamps ON. 3. Check the voltage at the BRN wire at the headlamp leveling switch. Is the voltage equal to the specified value?	11-14 V	Go to *Step 13*	Go to *Step 10*
10	1. Remove the headlamp switch for testing, but leave the electrical connectors connected. 2. Turn the low-beam headlamps ON. 3. Check the voltage at the BRN wire at the headlamp and turn signal switch seven-pin connector. Does the voltage equal the specified value?	11-14 V	Go to *Step 12*	Go to *Step 11*

Headlamp Leveling Is Inoperative (Cont'd)

Step	Action	Value(s)	Yes	No
11	Replace the headlamp switch. Is the repair complete?	-	System OK	-
12	Repair the open circuit in the BRN wire between the headlamp switch and the headlamp leveling switch. Is the repair complete?	-	System OK	-
13	1. Turn the low-beam headlamps ON. 2. With the headlamp leveling switch removed for testing and the electrical connector still connected, check the voltage at the DK GRN wire at the headlamp leveling switch with the switch dial set at „0.” Does the voltmeter indicate the specified value?	11-14 V	Go to *Step 15*	Go to *Step 14*
14	Replace the headlamp leveling switch. Is the repair complete?	-	System OK	-
15	1. Turn the low-beam headlamps ON. 2. With the headlamp leveling switch removed for testing and the electrical connector still connected, check the voltage at the DK GRN wire at the headlamp leveling switch as the switch is dialed to „3.” Does the drop in voltage equal the specified value?	4.5 V	Go to *Step 16*	Go to *Step 14*
16	Repair the open DK GRN wire between the headlamp leveling switch and the headlamp leveling motors. Is the repair complete?	-	System OK	-

FOG LAMPS

Front Fog Lamps Inoperative

Step	Action	Value(s)	Yes	No
1	Check fuse EF37. Is EF37 blown?	-	Go to *Step 2*	Go to *Step 3*
2	1. Check for a short circuit and repair if necessary. 2. Replace the fuse. Is the repair complete?	-	System OK	-
3	Use a voltmeter or test lamp to check fuse EF37. Does the battery voltage available at fuse EF37 equal the specified value?	11-14 V	Go to *Step 5*	Go to *Step 4*
4	Repair the open circuit from the battery to fuse EF37. Is the repair complete?	-	System OK	-
5	Remove the fog lamp relay and temporarily substitute a known good relay such as the headlamp relay or the illumination lamp relay. Do the fog lamps work with the substituted relay?	-	Go to *Step 6*	Go to *Step 7*
6	1. Return the substituted relay to its original position. 2. Replace the inoperative fog lamp relay. Is the repair complete?	-	System OK	-
7	1. Return the substituted relay to its original position, but do not reinstall the fog lamp relay. 2. Using a voltmeter or test lamp, check the fog lamp relay socket terminal 87. Does the battery voltage available at the fog lamp relay socket equal the specified value?	11-14 V	Go to *Step 9*	Go to *Step 8*
8	Repair the open circuit between fuse EF37 and the fog lamp relay. Is the repair complete?	-	System OK	-
9	At the fog lamp relay socket, use an ohmmeter or test lamp to verify that the connector for relay terminal 86 is connected to ground. Does the resistance equal the specified value?	0 Ω	Go to *Step 11*	Go to *Step 10*
10	Repair the ground circuit for the fog lamp relay. Is the repair complete?	-	System OK	-
11	With the fog lamp relay reinstalled and the switch on test for voltage at the fog lamp connector. Does the battery voltage available at the fog lamp connector equal the specified value?	11-14 V	Go to *Step 13*	Go to *Step 12*
12	Repair the open circuit between the fog lamp relay terminal 87 and the fog lamps. Is the repair complete?	-	System OK	-
13	Use an ohmmeter or test lamp to check the ground at the ground side of the fog lamp connector. Does the resistance equal the specified value?	0 Ω	Go to *Step 15*	Go to *Step 14*
14	Repair the fog lamp ground circuit. Is the repair complete?	-	System OK	-
15	Replace the faulty fog lamp bulbs. Is the repair complete?	-	System OK	-

Rear Fog Lamps Are Inoperative

Diagnostic Aids

The rear fog lamps will not operate unless the headlamps or the front fog lamps are ON.

The rear fog lamp indicator in the instrument cluster can shorten the diagnostic process. If the instrument cluster indicator comes ON, but the rear fog lamps do not come ON, the problem is either an open circuit between the rear fog lamp relay and the lamps, faulty lamps, or a bad ground for the rear fog lamps.

Test Description

The number(s) below refer to step(s) on the diagnostic table.

1. The front fog lamps will not turn ON unless the parking lamps or headlamps are ON.
11. The rear fog lamp relay is located in the relay area under the instrument panel.
18. The rear fog lamp switch is powered through a diode which is taped to the body wiring harness near the instrument panel fuse block. If it is necessary to test power at the diode, remove the driver kick panel.

Step	Action	Value(s)	Yes	No
1	Check the headlamps and the front fog lamps. Do the headlamps and the front fog lamps operate?	-	Go to *Step 3*	Go to *Step 2*
2	Repair the headlamps or the front fog lamps before completing this diagnostic table. Do the rear fog lamps work after the headlamps or the front fog lamps have been repaired?	-	System OK	Go to *Step 3*
3	1. Remove the rear fog lamp bulbs. 2. Turn the headlamps ON. 3. Turn the rear fog lamp switch ON. 4. Check the voltage at the RED wire to the rear fog lamp bulbs. Is the voltage equal to the specified value?	11-14 V	Go to *Step 4*	Go to *Step 7*
4	With the rear fog lamp bulbs removed, use an ohmmeter to check the continuity between the BLK wire at the rear fog lamps and ground. Does the ohmmeter indicate the specified value?	≈ 0 Ω	Go to *Step 6*	Go to *Step 5*
5	Repair the faulty BLK wire between the rear fog lamps and ground. Is the repair complete?	-	System OK	-
6	Replace the faulty fog lamp bulbs. Is the repair complete?	-	System OK	-
7	Check fuses EF1 and F5. Is either fuse blown?	-	Go to *Step 8*	Go to *Step 9*
8	1. Check for a short circuit and repair if necessary. 2. Replace the fuse. Is the repair complete?	-	System OK	-
9	Check the voltage at EF1 and F5. Is the voltage equal to the specified value?	11-14 V	Go to *Step 11*	Go to *Step 10*
10	Repair the power supply circuit to the fuses. Is the repair complete?	-	System OK	-
11	1. Remove the rear fog lamp relay. 2. Probe the relay socket terminal 30 with a voltmeter. Is the voltage equal to the specified value?	11-14 V	Go to *Step 13*	Go to *Step 12*
12	Repair the open circuit between fuse F5 and terminal 30 of the rear fog lamp relay. Is the repair complete?	-	System OK	-

Rear Fog Lamps Are Inoperative (Cont'd)

Step	Action	Value(s)	Yes	No
13	1. With the rear fog lamp relay still disconnected, turn the headlamps ON. 2. Probe the rear fog lamp relay socket terminal 15. Is the voltage equal to the specified value?	11-14 V	Go to *Step 23*	Go to *Step 14*
14	1. Remove the rear fog lamp switch for testing, but do not disconnect the electrical connector. 2. Turn the headlamps ON. 3. Check the voltage at the BRN/WHT wire at the rear fog lamp switch. Is the voltage equal to the specified value?	11-14 V	Go to *Step 15*	Go to *Step 18*
15	1. With the rear fog lamp switch removed for testing, turn the headlamps ON. 2. Turn the rear fog lamp switch to the ON position. 3. Check the voltage at the YEL wire at the rear fog lamp switch. Is the voltage equal to the specified value?	11-14 V	Go to *Step 16*	Go to *Step 17*
16	Repair the open circuit between the rear fog lamp switch and the rear fog lamp relay terminal E. Is the repair complete?	-	System OK	-
17	Replace the rear fog lamp switch. Is the repair complete?	-	System OK	-
18	1. Turn the headlamps ON. 2. Check the voltage at the LT BLU wire at the rear fog lamp diode. Is the voltage equal to the specified value?	11-14 V	Go to *Step 20*	Go to *Step 19*
19	Repair the open circuit between the rear fog lamp diode and the headlamp relay. Is the repair complete?	-	System OK	-
20	1. Turn the headlamps ON. 2. Check the voltage at the WHT wire at the rear fog lamp diode. Is the voltage equal to the specified value?	11-14 V	Go to *Step 21*	Go to *Step 22*
21	Repair the open circuit between the rear fog lamp diode and the rear fog lamp switch. Is the repair complete?	-	System OK	-
22	Replace the rear fog lamp diode. Is the repair complete?	-	System OK	-
23	1. Temporarily substitute a known good relay in place of the rear fog lamp relay. 2. Turn the headlamps ON. 3. Turn the rear fog lamp switch to the ON position. Do the rear fog lamps work with the substituted relay?	-	Go to *Step 24*	Go to *Step 25*
24	1. Return the substituted relay to its original position. 2. Replace the rear fog lamp relay. Is the repair complete?	-	System OK	-
25	Connect a jumper wire between terminal 30 and terminal 87 at the rear fog lamp relay socket. Do the rear log lamps turn ON?	-	Go to *Step 26*	Go to *Step 27*

Rear Fog Lamps Are Inoperative (Cont'd)

Step	Action	Value(s)	Yes	No
26	Repair the ground circuit for the rear fog lamp relay. Is the repair complete?	-	System OK	-
27	Repair the open circuit between the rear fog lamp relay and the rear fog lamps. Is the repair complete?	-	System OK	-

TAIL/STOP/TURN BACKUP LAMPS

Taillamps Do Not Work

Notice: When probing a bulb socket with a voltmeter or a test lamp, do not contact the side of the socket (ground) when you are testing the positive contact at the bottom of the socket. If the voltage and the ground are both available at the bulb socket, contacting both at the same time with a test probe will cause a blown fuse.

Step	Action	Value(s)	Yes	No
1	Check the headlamps. Do the headlamps work?	-	Go to *Step 3*	Go to *Step 2*
2	Repair the headlamps before continuing with this chart. After the headlamps have been repaired, are the rear combination lamps still inoperative?	-	Go to *Step 3*	System OK
3	1. Turn the taillamps on. 2. Use a voltmeter to check voltage at the bulb socket positive terminal. Does voltage at the bulb socket equal the specified value?	11-14 V	Go to *Step 4*	Go to *Step 7*
4	Connect an ohmmeter between ground and the lamp socket negative terminal. Is the resistance equal to the specified value?	0 Ω	Go to *Step 6*	Go to *Step 5*
5	Repair the ground circuit for the lamps. Is the repair complete?	-	System OK	-
6	Replace the faulty bulbs. Is the repair complete?	-	System OK	-
7	Check fuses EF34, EF20, and EF21. Is any of the fuses blown?	-	Go to *Step 8*	Go to *Step 9*
8	1. Check for a short circuit and repair if necessary. 2. Replace the fuse. Is the repair complete?	-	System OK	-
9	1. Turn the headlamps on. 2. Check the voltage at fuses EF21 for the left-side taillamp and EF20 for the right-side taillamp. Does the voltage at the fuses equal the specified value?	11-14 V	Go to *Step 23*	Go to *Step 10*
10	Check the voltage at fuse EF34. Does the voltage at fuse EF34 equal the specified value?	11-14 V	Go to *Step 12*	Go to *Step 11*
11	Repair the battery supply circuit to fuse EF34. Is the repair complete?	-	System OK	-
12	1. Temporarily substitute the headlamp relay for the illumination relay. 2. Turn the taillamp switch on. Do the taillamps illuminate?	-	Go to *Step 13*	Go to *Step 14*

Taillamps Do Not Work (Cont'd)

Step	Action	Value(s)	Yes	No
13	1. Return the headlamp relay to its original position. 2. Replace the illumination relay. Is the repair complete?	-	System OK	-
14	1. Remove the taillamp relay. 2. Use a voltmeter to check the illumination relay socket at the connector terminal 85. Is the voltage at the connector terminal 85 of the taillamp relay equal to the specified value?	11-14 V	Go to *Step 16*	Go to *Step 15*
15	Repair the open circuit between fuse EF34 and the connector for the illumination relay terminal 85. Is the repair complete?	-	System OK	-
16	Connect an ohmmeter between ground and the illumination relay terminal 86. Is the resistance equal to the specified value?	0 Ω	Go to *Step 18*	Go to *Step 17*
17	Repair the ground circuit for the illumination relay. Is the repair complete?	-	System OK	-
18	1. Turn the taillamp on. 2. Check the voltage at the connector for terminal 30 of the illumination relay. Is the voltage equal to the specified value?	11-14 v	Go to *Step 22*	Go to *Step 19*
19	1. Disconnect the headlamp switch connector C2. 2. On the disconnected switch, turn the taillamps on. 3. At switch C2, use an ohmmeter to check for continuity between terminal 2 and terminal 3. Is the resistance equal to the specified value?	0 Ω	Go to *Step 21*	Go to *Step 20*
20	Repair the open circuit between the headlamp switch C2 terminal 3 and terminal 86 of the illumination relay. Is the repair complete?	-	System OK	-
21	Replace the headlamp switch. Is the repair complete?	-	System OK	-
22	Repair the open circuit between terminal 87 of the taillamp and fuses EF20 and EF21. Is the repair complete?	-	System OK	-
23	Repair the open circuit between the fuses EF20 and EF21 and the taillamps. Is the repair complete?	-	System OK	-

Stoplamps Do Not Work

Notice: When probing a bulb socket with a voltmeter or a test lamp, do not contact the side of the socket (ground) when you are testing the positive contact at the bottom of the socket. If the voltage and the ground are both available at the bulb socket, contacting both at the same time with a test probe will cause a blown fuse.

Step	Action	Value(s)	Yes	No
1	Check fuse EF23. Is fuse EF23 blown?	-	Go to *Step 2*	Go to *Step 3*
2	1. Check for a short circuit and repair if necessary. 2. Replace the fuse. Is the repair complete?	-	System OK	-
3	1. Depress the brake pedal. 2. Check the positive terminals of the bulb sockets with a test lamp. Does the test lamp illuminate?	-	Go to *Step 4*	Go to *Step 6*
4	Connect an ohmmeter between ground and the stoplamp ground terminal. Is the resistance equal to the specified value?	0 Ω	Go to *Step 6*	Go to *Step 5*
5	Repair the ground circuit. Is the repair complete?	-	System OK	-
6	1. Disconnect the wiring connector from the stoplamp switch. 2. Depress the brake pedal. 3. Use an ohmmeter to check continuity between terminals 2 and 1. Is the resistance equal to the specified value?	0 Ω	Go to *Step 8*	Go to *Step 7*
7	Replace the stoplamp switch. Is the repair complete?	-	System OK	-
8	1. Disconnect the stoplamp switch electrical connector. 2. Check the voltage at terminal 2. Does the voltmeter show the specified value?	11-14 v	Go to *Step 10*	Go to *Step 9*
9	Repair the open circuit between the fuse EF23 and the stoplamp switch. Is the repair complete?	-	System OK	-
10	Repair the open circuit between the stoplamp switch and the stoplamps. Is the repair complete?	-	System OK	-

Backup Lamps Inoperative

Step	Action	Value(s)	Yes	No
1	Check fuse F14. Is fuse F14 blown.?	-	Go to *Step 2*	Go to *Step 3*
2	1. Check for a short circuit and repair if necessary. 2. Replace fuse F14. Is the repair complete?	-	System OK	-
3	Use a voltmeter to verify that battery voltage is available at fuse F14. Does the voltmeter indicate the specified value?	11-14 V	Go to *Step 5*	Go to *Step 4*
4	Repair the power supply circuit for fuse F14. Is the repair complete?	-	System OK	-
5	1. Remove and examine the backup lamp bulbs. 2. Test the bulbs by connecting them to the vehicle battery with jumper wires. Are the bulbs defective?	-	Go to *Step 6*	Go to *Step 7*
6	Replace the defective bulbs. Is the repair complete?	-	System OK	-
7	1. Reinstall the backup lamps after testing. 2. Turn the ignition ON. 3. Disconnect the backup switch connector. 4. Check the voltage at terminal A of the backup switch (or terminal 1 of the neutral safety/backup switch if the vehicle has an automatic transmission). Does the voltmeter indicate the specified value?	11-14 V	Go to *Step 9*	Go to *Step 8*
8	Repair the open circuit between fuse F14 and the backup switch. Is the repair complete?	-	System OK	-
9	1. Turn the ignition ON. 2. Apply the parking brake. 3. Block the wheels to prevent the vehicle from moving. 4. Put the transaxle in REVERSE. 5. Use a voltmeter to check voltage at terminal B of the backup switch (or terminal 2 of the neutral safety/backup switch if the vehicle has an automatic transmission). Does the voltmeter indicate the specified value?	11-14 V	Go to *Step 11*	Go to *Step 10*
10	Replace the backup switch. Is the repair complete?	-	System OK	-
11	1. Remove one of the backup lamps. 2. Turn the ignition ON. 3. Apply the parking brake. 4. Block the wheels to prevent the vehicle from moving. 5. Put the transaxle in REVERSE. 6. Use a voltmeter to check voltage at the positive terminal of the backup lamp socket. Does voltage at the lamp socket equal the specified value?	11-14 V	Go to *Step 12*	Go to *Step 13*
12	Repair the ground circuit of the backup lamps. Is the repair complete?	-	System OK	-
13	Repair the open circuit between the backup lamps and the backup switch. Is the repair complete?	-	System OK	-

Turn Signal Lamps and Hazard Lamps Do Not Work

Notice: When probing a bulb socket with a voltmeter or a test lamp, do not contact the side of the socket (ground) when you are testing the positive contact at the bottom of the socket. If the voltage and the ground are both available at the bulb socket, contacting both at the same time with a test probe will cause a blown fuse.

Step	Action	Value(s)	Yes	No
1	Check fuses EF12 and F11. Is either fuse blown?	-	Go to *Step 2*	Go to *Step 3*
2	Check for a short circuit and repair if necessary. Replace the fuse. Is the repair complete?	-	System OK	-
3	1. Turn the ignition on. 2. Check the voltage at fuse EF12 and F11. Does the battery voltage available at both fuses EF12 and F11 equal the specified value?	11-14 V	Go to *Step 4*	Go to *Step 7*
4	1. Turn the hazard lamp switch on. 2. Remove each of the inoperative lamps from its socket. 3. Test each lamp socket positive terminal with a voltmeter. Does the battery voltage pulsing at the turnsignal, hazardlamp socket positive terminal equal the specified value?	11-14 V	Go to *Step 5*	Go to *Step 9*
5	At each bulb socket, use an ohmmeter to check the ground circuit. Is the resistance equal to the specified value?	0 Ω	Go to *Step 6*	Go to *Step 8*
6	Replace any faulty turn signal/ hazard bulbs. Is the repair complete?	-	System OK	-
7	Repair the power supply circuit to fuses. Is the repair complete?	-	System OK	-
8	Repair the open ground circuit. Is the repair complete?	-	System OK	-
9	1. Turn on the hazard switch. 2. Test the blinker unit connector terminal 49a with a voltmeter. Does the battery voltage pulsing at the blinker unit terminal 49a equal the specified value?	11-14 V	Go to *Step 15*	Go to *Step 10*
10	1. Turn on the hazard switch. 2. Test the blinker unit connector terminal 49 with a voltmeter. Does the battery voltage available at the blinker unit terminal 49 equal the specified value?	11-14 V	Go to *Step 11*	Go to *Step 14*
11	1. Disconnect the blinker unit from the connector. 2. Use an ohmmeter to check between ground and the connector for terminal 31 of the blinker unit. Is the resistance equal to the specified value?	0-0.5 Ω	Go to *Step 13*	Go to *Step 12*
12	Repair the blinker unit ground connection. Is the repair complete?	-	System OK	-
13	Replace faulty blinker unit. Is the repair complete?	-	System OK	-

Turn Signal Lamps and Hazard Lamps Do Not Work (Cont'd)

Step	Action	Value(s)	Yes	No
14	1. Disconnect the hazard switch connector. 2. Check for voltage at terminal 8. 3. Turn the ignition on. 4. Check for voltage at terminal 10. Does the battery voltage available at both terminals equal the specified value?	11-14 V	Go to *Step 15*	Go to *Step 19*
15	1. Remove the hazard switch. 2. Turn the hazard switch OFF. 3. Check for continuity between terminals 7 and 10. 4. Turn the hazard switch on. 5. Check for continuity between terminals 7 and 8. Do both tests show the specified value?	0 Ω	Go to *Step 18*	Go to *Step 16*
16	1. Remove the hazard switch. 2. Turn the hazard switch to the on position. 3. Use an ohmmeter to check for continuity between terminals 5, 6, and 9. Does the continuity between terminals 5, 6, and 9 equal the specified value?	0 Ω	System OK	Go to *Step 17*
17	Replace the faulty hazard switch. Is the repair complete ?	-	System OK	-
18	Repair the open circuit between hazard switch terminal 7 and blinker unit terminal 49. Is the repair complete?	-	System OK	-
19	Repair the open circuit between the hazard switch and the fuses EF12 or F11. Is the repair complete?	-	System OK	-

Hazard Lamps Do Not Operate, Turn Signals Are OK

Step	Action	Value(s)	Yes	No
1	Check fuse EF12. Is fuse EF12 blown?	-	Go to *Step 2*	Go to *Step 3*
2	1. Check for a short circuit and repair if necessary. 2. Replace the fuse. Is the repair complete?	-	System OK	-
3	Use a voltmeter to check for power to fuse EF12. Does the battery voltage available at fuse EF12 equal the value specified?	11-14 V	Go to *Step 5*	Go to *Step 4*
4	Repair the power supply circuit to fuse EF12. Is the repair complete?	-	System OK	-
5	1. Disconnect the hazard switch connector. 2. Use a voltmeter to check power to the hazard switch terminal 8. Does the battery voltage available at connector terminal 8 equal the value specified?	11-14 V	Go to *Step 6*	Go to *Step 9*
6	1. Remove the hazard switch and disconnect it for testing. 2. Turn the hazard switch to the on position. 3. Test with an ohmmeter between terminals 8 and 7. Is the resistance equal to the specified value?	0 Ω	Go to *Step 7*	Go to *Step 10*
7	1. With the hazard switch still removed and disconnected for testing, turn the hazard switch to the on position. 2. Use an ohmmeter to check between terminals 5, 6, and 9. Is the resistance equal to the specified value?	0 Ω	Go to *Step 8*	Go to *Step 10*
8	Repair the open circuit between the hazard switch connector and splice S203. Is the repair complete?	-	System OK	-
9	Repair the open circuit between the hazard switch connector terminal 8 and fuse EF12. Is the repair complete?	-	System OK	-
10	Replace the faulty hazard switch. Is the repair complete?	-	System OK	-

INTERIOR COURTESY AND LUGGAGE COMPARTMENT LAMPS

Interior Courtesy Lamp Inoperative

Caution: Always make sure there is an electrical load such as a lamp bulb, etc. in any circuit between battery terminals. Do not make a short circuit between battery terminals with a jumper wire, or hazardous sparking will result.

Test Description

The number(s) below refers to step(s) on the diagnostic table.

1. Bulb test. Clip one end of a jumper wire to the negative battery terminal. Clip the other end of the jumper wire onto one end of the bulb. Take the end of the bulb without the jumper attached and touch it to the positive battery terminal.

Step	Action	Value(s)	Yes	No
1	1. Remove the interior courtesy lamp bulb and inspect the filament. 2. If the filament is not broken, test the bulb using the vehicle's battery and a jumper wire. Does the bulb pass the visual and physical checks?	-	Go to *Step 3*	Go to *Step 2*
2	Replace the bulb. Is the repair complete?	-	System OK	-
3	1. Reinstall the interior courtesy lamp bulb. 2. Check fuses EF7 and EF32. Is either fuse EF7 or EF32 blown?	-	Go to *Step 4*	Go to *Step 5*
4	1. Check for a short circuit and repair it if necessary. 2. Replace the fuse. Is the repair complete?	-	System OK	-
5	Check the voltage at fuses EF7 and EF32. Does the voltage at fuses EF7 and EF32 equal the specified value?	11-14 V	Go to *Step 7*	Go to *Step 6*
6	Repair the open circuit between the battery and fuses EF7 and EF29. Is the repair complete?	-	System OK	-
7	1. Disconnect the interior courtesy lamp electrical connector. 2. Check the voltage at connector terminal 3. Does the voltage at connector terminal 3 equal the value specified?	11-14 V	Go to *Step 8*	Go to *Step 9*
8	Repair the open circuit between fuse EF32 and the interior courtesy lamp terminal 3. Is the repair complete?	-	System OK	-
9	Use an ohmmeter to check the resistance between ground and terminal 4 of the interior courtesy lamp connector on the harness side. Is the resistance equal to the specified value?	0 Ω	Go to *Step 10*	Go to *Step 11*
10	Replace the interior courtesy lamp switch assembly. Is the repair complete?	-	System OK	-
11	Repair the ground circuit for the interior courtesy lamp. Is the repair complete?	-	System OK	-

Luggage Compartment Lamp Inoperative

Caution: Always make sure there is an electrical load such as a lamp bulb, etc. in any circuit between battery terminals. Do not make a short circuit between battery terminals with a jumper wire, or hazardous sparking will result.

The number(s) below refer to step(s) on the diagnostic table.

1. Bulb test. Clip one end of a jumper wire to the negative battery terminal. Clip the other end of the jumper wire onto one end of the bulb. Take the end of the bulb without the jumper attached and touch it to the positive battery terminal.

Step	Action	Value(s)	Yes	No
1	1. Remove the luggage compartment lamp bulb and inspect the filament. 2. If the filament is not broken, test the bulb using the vehicle's battery and a jumper wire. Does the bulb pass the visual and physical check?	-	Go to *Step 3*	Go to *Step 2*
2	Replace the bulb. Is the repair complete?	-	System OK	-
3	1. Reinstall the luggage compartment lamp bulb. 2. Check fuse EF29. Is fuse EF29 blown?	-	Go to *Step 4*	Go to *Step 5*
4	1. Check for a short circuit and repair if necessary. 2. Replace the fuse. Is the repair complete?	-	System OK	-
5	Check the voltage at fuse EF29. Does the voltage at fuse EF29 equal the specified value?	11-14 V	Go to *Step* 7	Go to *Step* 6
6	Repair the open circuit between the battery and fuse EF29. Is the repair complete?	-	System OK	-
7	1. Disconnect the luggage compartment lamp electrical connector. 2. Check the voltage at the ORN wire. Does the voltage at the ORN wire equal the specified value?	11-14 V	Go to *Step* 8	Go to *Step* 9
8	Repair the open circuit between fuse EF29 and the luggage compartment lamp. Is the repair complete?	-	System OK	-
9	1. Reconnect the luggage compartment lamp. 2. Remove the luggage compartment lamp switch. 3. With a voltmeter or test lamp, test the PNK/BLK wire at the luggage compartment lamp switch. Does the voltage at the luggage compartment lamp switch equal the specified value?	11-14 V	Go to *Step 11*	Go to *Step 10*
10	Repair the open circuit between the luggage compart□ ment lamp and the luggage compartment lamp switch. Is the repair complete?	-	System OK	-
11	Use an ohmmeter to check the resistance between ground and the luggage compartment lamp switch. Is the resistance equal to the specified value?	0 Ω	Go to *Step 12*	Go to *Step 13*
12	Replace the luggage compartment lamp switch. Is the repair complete?	-	System OK	-
13	Repair the ground circuit for the luggage compartment lamp switch. Is the repair complete?	-	System OK	-

Ignition Key Illumination Lamp Is Inoperative

Diagnostic Aids

In a vehicle equipped with a sunroof, the interior courtesy lamp is located near the rearview mirror and also serves as a map lamp. In a nonsunroof vehicle, the interior courtesy lamp is in the roof in the middle of the passenger compartment, and there are separate map lamps near the rearview mirror.

There is a timer in the interior courtesy lamp that will only supply a ground to the key illumination lamp for a few seconds after a door is opened and closed.

Test Description

The number(s) below refer to step(s) on the diagnostic table.

5. The resistance of the key illumination bulb and attached harness is approximately 14.1 ohms.

Step	Action	Value(s)	Yes	No
1	1. Set the switch on the courtesy lamp so that it comes ON when a door is opened. 2. Check the function of the courtesy lamp. Is the courtesy lamp operating?	-	Go to *Step 3*	Go to *Step 2*
2	Repair the interior courtesy lamp system before completing this diagnostic table. Does the key illumination lamp function after the courtesy lamp has been repaired?	-	System OK	Go to *Step 3*
3	1. Remove the lower steering column cover to gain access to the connectors for the ignition switch. 2. Disconnect the connector to the key illumination lamp. 3. Check the voltage at terminal 1 of the key illumination lamp connector. Is the voltage equal to the specified value?	11-14 V	Go to *Step 5*	Go to *Step 4*
4	Repair the open circuit between fuse EF29 and the ignition key illumination lamp connector. Is the repair complete?	-	System OK	-
5	1. Remove the key illumination lamp and the attached wires and connector. 2. Use a vehicle battery and jumper wires to directly power the illumination lamp through its attached connector and wires. Does the key illumination lamp turn ON when it is directly connected to power and ground from a battery?	-	Go to *Step 9*	Go to *Step 6*
6	Check the key illumination lamp bulb. Is the bulb defective?	-	Go to *Step 7*	Go to *Step 8*
7	Replace the key illumination lamp bulb. Is the repair complete?	-	System OK	-
8	Replace the lamp socket and the attached wires and connector. Is the repair complete?	-	System OK	-

Ignition Key Illumination Lamp Is Inoperative (Cont'd)

Step	Action	Value(s)	Yes	No
9	1. Remove the courtesy lamp. 2. Disconnect the electrical connector of the courtesy lamp. 3. Connect an ohmmeter between key illumination connector terminal 2 and the interior courtesy lamp connector terminal 6. Does the ohmmeter indicate the specified value?	≈ 0 Ω	Go to *Step 11*	Go to *Step 10*
10	Repair the open circuit between the key illumination connector and the courtesy lamp connector. Is the repair complete?	-	System OK	-
11	Replace the courtesy lamp. Is the repair complete?	-	System OK	-

Vanity Mirror Lighting Is Inoperative

Diagnostic Aids

If the vanity lighting is working on one side of a mirror but not on the other side, check the lamp bulb. If the vanity mirror lighting is working on one side of the car but not on the other side, begin the diagnostic table at Step 3.

Test Description

The number(s) below refer to step(s) on the diagnostic table.

1. In a vehicle equipped with a sunroof, the interior courtesy lamp is located near the rearview mirror and also serves as a map lamp. In a non-sunroof vehicle, the interior courtesy lamp is in the roof in the middle of the passenger compartment, and there are separate map lamps near the rearview mirror. The vanity mirror lamps have the same fuse and ground as the courtesy lamp.
7. The resistance of a vanity mirror lamp bulb is about 4.2 ohms.

Step	Action	Value(s)	Yes	No
1	Check the operation of the courtesy lamp. Does the courtesy lamp operate?	-	Go to *Step 3*	Go to *Step 2*
2	Repair the interior courtesy lamp system before completing this diagnostic table. Does the key illumination lamp function after the courtesy lamp system has been repaired?	-	System OK	Go to *Step 3*
3	1. Remove the sun visor. 2. Check the voltage at terminal 1 of the wire harness connector for the sun visor. Does the voltmeter indicate the specified value?	11-14 V	Go to *Step 5*	Go to *Step 4*
4	Repair the open circuit between fuse EF29 and terminal 1 of the sun visor connector. Is the repair complete?	-	System OK	-
5	Connect an ohmmeter between ground and terminal 2 of the sun visor connector. Does the ohmmeter indicate the specified value?	≈ 0 Ω	Go to *Step 7*	Go to *Step 6*
6	Repair the open circuit between terminal 2 of the sun visor connector and ground. Is the repair complete?	-	System OK	-
7	Check the lamp bulb(s). Are the lamp bulbs OK?	-	Go to *Step 9*	Go to *Step 8*
8	Replace the faulty lamp bulbs. Is the repair complete?	-	System OK	-
9	Replace the sun visor. Is the repair complete?	-	System OK	-

DOOR STEP LAMPS

Door Step Lamps Inoperative

Caution: Always make sure there is an electrical load such as a lamp bulb, etc. in any circuit between battery terminals. Do not make a short circuit between battery terminals with a jumper wire, or hazardous sparking will result.

Test Description

The number(s) below refer to step(s) on the diagnostic table.

1. Bulb test. Clip one end of a jumper wire to the negative battery terminal. Clip the other end of the jumper wire onto one end of the bulb. Take the end of the bulb without the jumper attached and touch it to the positive battery terminal.

Step	Action	Value(s)	Yes	No
1	1. Remove the door step lamp bulb and inspect the filament. 2. If the filament is not broken, test the bulb using the vehicle's battery and a jumper wire. Does the bulb pass the visual and physical check?	-	Go to *Step 3*	Go to *Step 2*
2	Replace the bulb. Is the repair complete?	-	System OK	-
3	1. Reinstall the door step lamp bulb. 2. Check fuse EF29. Is fuse EF29 blown?	-	Go to *Step 4*	Go to *Step 5*
4	1. Check for a short circuit and repair if necessary. 2. Replace the fuse. Is the repair complete?	-	System OK	-
5	Check the voltage at fuse EF29. Does the voltage at fuse EF29 equal the specified value?	11-14 V	Go to *Step* 7	Go to *Step* 6
6	Repair the open circuit between the battery and fuse EF29. Is the repair complete?	-	System OK	-
7	1. Disconnect the door step lamp electrical connector. 2. Check the voltage at terminal 20 of connectors C351 and C361. Does the voltage at terminal 20 of connectors C351 and C361 equal the specified value?	11-14 V	Go to *Step* 8	Go to *Step* 9
8	Repair the open circuit between fuse EF29 and the door step lamp. Is the repair complete?	-	System OK	-
9	1. Reconnect the door step lamp. 2. Remove the front door switch. 3. With a voltmeter or test lamp, test the WHT wire at the front door switch. Does the voltage at the front door switch equal the specified value?	11-14 V	Go to *Step 11*	Go to *Step 10*
10	Repair the open circuit between the door step lamp and the front door switch. Is the repair complete?	-	System OK	-

Door Step Lamp Inoperative (Cont'd)

Step	Action	Value(s)	Yes	No
11	Use an ohmmeter to check the resistance between ground and the BLK wire at the front door switch connector on the harness side. Is the resistance equal to the specified value?	0 Ω	Go to *Step 12*	Go to *Step 13*
12	Replace the front door switch. Is the repair complete?	-	System OK	-
13	Repair the ground circuit for the front door switch. Is the repair complete?	-	System OK	-

GLOVE BOX LAMP

Glove Box Lamp Inoperative

Caution: Always make sure there is an electrical load such as a lamp bulb, etc. in any circuit between battery terminals. Do not make a short circuit between battery terminals with a jumper wire, or hazardous sparking will result.

Test Description

The number(s) below refer to step(s) on the diagnostic table.

1. Bulb test. Clip one end of a jumper wire to the negative battery terminal. Clip the other end of the jumper wire onto one end of the bulb. Take the end of the bulb without the jumper attached and touch it to the positive battery terminal.

Step	Action	Value(s)	Yes	No
1	1. Remove the glove box lamp bulb and inspect the filament. 2. If the filament is not broken, test the bulb using the vehicle's battery and a jumper wire. Does the bulb pass the visual and physical check?	-	Go to *Step 3*	Go to *Step 2*
2	Replace the bulb. Is the repair complete?	-	System OK	-
3	1. Reinstall the glove box lamp bulb. 2. Check fuse F8. Is fuse F8 blown?	-	Go to *Step 4*	Go to *Step 5*
4	1. Check for a short circuit and repair if necessary. 2. Replace the fuse. Is the repair complete?	-	System OK	-
5	Check the voltage at fuse F8. Does the voltage at fuse F8 equal the specified value?	11-14 V	Go to *Step* 7	Go to *Step* 6
6	Repair the open circuit between the battery and fuse F8. Is the repair complete?	-	System OK	-
7	1. Disconnect the glove box lamp electrical connector. 2. Check the voltage at terminal 1 of the glove box lamp. Does the voltage at terminal 1 of the glove box lamp equal the specified value?	11-14 V	Go to *Step* 8	Go to *Step* 9
8	Repair the open circuit between fuse F8 and the glove box lamp. Is the repair complete?	-	System OK	-

Glove Box Lamp Inoperative (Cont'd)

Step	Action	Value(s)	Yes	No
9	1. Connect the glove box lamp. 2. Remove the glove box lamp switch. 3. With a voltmeter or test lamp, test terminal 1 of the glove box lamp switch at the glove box switch. Does the voltage at terminal 1 of the glove box lamp switch equal the specified value?	11-14 V	Go to *Step 11*	Go to *Step 10*
10	Repair the open circuit between the glove box lamp and the glove box lamp switch. Is the repair complete?	-	System OK	-
11	Use an ohmmeter to check the resistance between ground and terminal 2 of the glove box lamp switch connector on the harness side. Is the resistance equal to the specified value?	0 Ω	Go to *Step 12*	Go to *Step 13*
12	Replace the glove box lamp switch. Is the repair complete?	-	System OK	-
13	Repair the ground circuit for the glove box lamp switch. Is the repair complete?	-	System OK	-

ASHTRAY LAMP

Notice: When probing a bulb socket with a voltmeter or a test lamp, do not allow the probe to touch both the positive and the negative contacts at the same time, which will blow a fuse.

Step	Action	Value(s)	Yes	No
1	Check fuses EF34 and EF20. Is either fuse EF34 or EF20 blown?	-	Go to *Step 2*	Go to *Step 3*
2	1. Check for a short circuit to EF34 and EF20 and repair if necessary. 2. Replace the fuse. Is the repair complete?	-	System OK	-
3	1. Turn the light switch on. 2. Remove the ashtray lamp from the socket. 3. Use a voltmeter, to check battery voltage available at the ashtray lamp socket. Does the battery voltage match the value specified?	-	Go to *Step 5*	Go to *Step 4*
4	Repair the open circuit between the ashtray lamp socket and fuse EF20. Is the repair complete?	-	System OK	-
5	1. Turn the light switch on. 2. Using an ohmmeter, check the ground circuit to the lamp socket. Does the resistance equal the value specified?	≈ 0 Ω	Go to *Step 7*	Go to *Step 6*
6	Repair the open ground circuit between the ashtray lamp socket and ground. Is the repair complete?	-	System OK	-
7	Replace the ashtray lamp. Is the repair complete?	-	System OK	-

CIGAR LIGHTER

Cigar Lighter Inoperative

Step	Action	Value(s)	Yes	No
1	Check fuse F8. Is the fuse blown?	-	Go to *Step 2*	Go to *Step 3*
2	1. Check for a short circuit and repair if necessary. 2. Replace the fuse. Is the repair complete?	-	System OK	-
3	1. Turn the ignition key to the ACC position. 2. Use a voltmeter to check for voltage at fuse F8. Does the battery voltage available at the fuse F8 match the value specified?	11-14 V	Go to *Step 5*	Go to *Step 4*
4	Repair the open powersupply circuit for fuse F8. Is the repair complete?	-	System OK	-
5	1. Remove the electrical connector from the back of the cigar lighter. 2. Turn the ignition key to the ACC position. 3. Use a voltmeter to check the voltage at terminal 1 of the cigar lighter. Does the battery voltage available at terminal 1 of the cigar lighter match the value specified?	11-14 V	Go to *Step 7*	Go to *Step 6*
6	Repair the open circuit between the fuse F8 and the cigar lighter. Is the repair complete?	-	System OK	-
7	With the ignition key still in the ACC position, use an ohmmeter to check continuity between terminal 2 of the cigar lighter connector and ground. Does the battery voltage match the value specified?	11-14 V	Go to *Step 9*	Go to *Step 8*
8	Repair the open ground circuit. Is the repair complete?	-	System OK	-
9	Replace the cigar lighter. Is the repair complete?	-	System OK	-

MAINTENANCE AND REPAIR

ON-VEHICLE SERVICE

HEADLAMPS

Removal Procedure

1. Disconnect the negative battery cable.
2. Remove the bolts and the headlamp assembly.

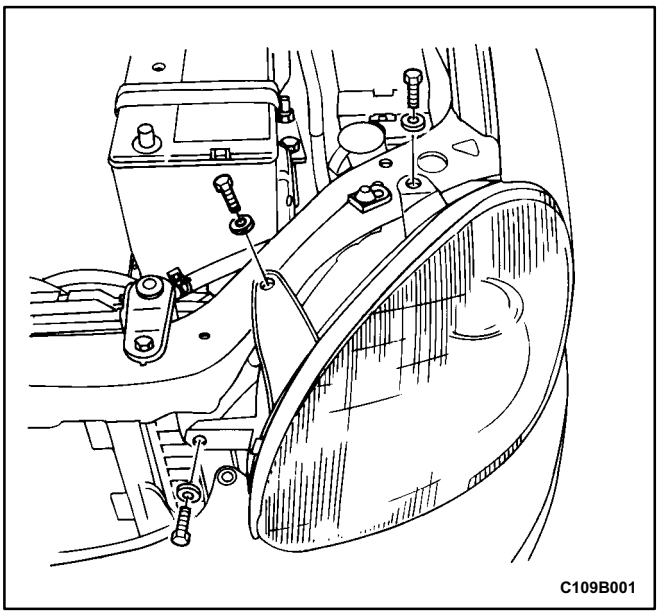

3. Disconnect the headlamp assembly electrical connectors.

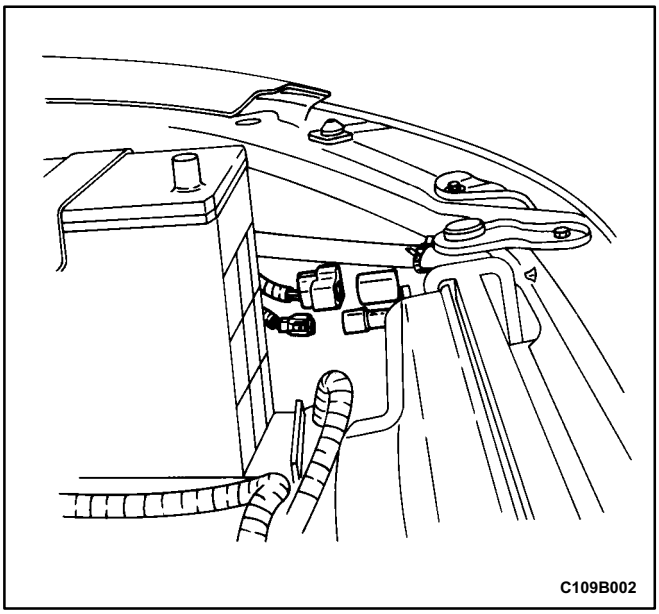

4. Remove the cap that conceals the headlamp bulb.
5. Disconnect the headlamp bulb electrical connector.
6. Remove the headlamp bulb.

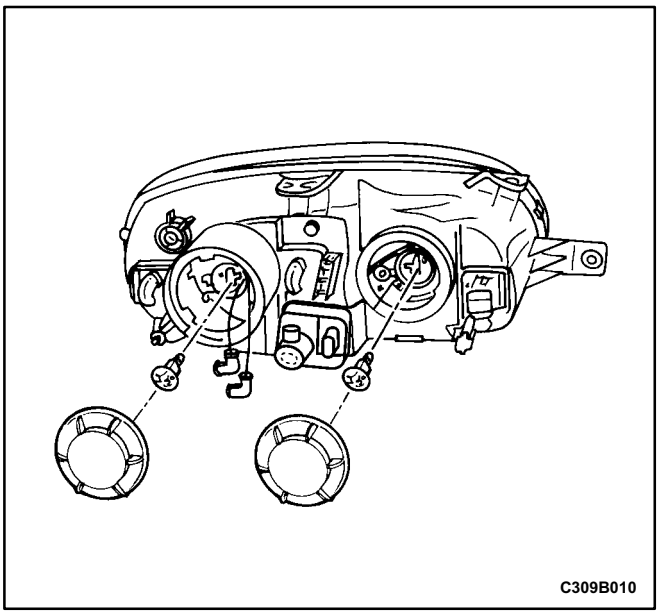

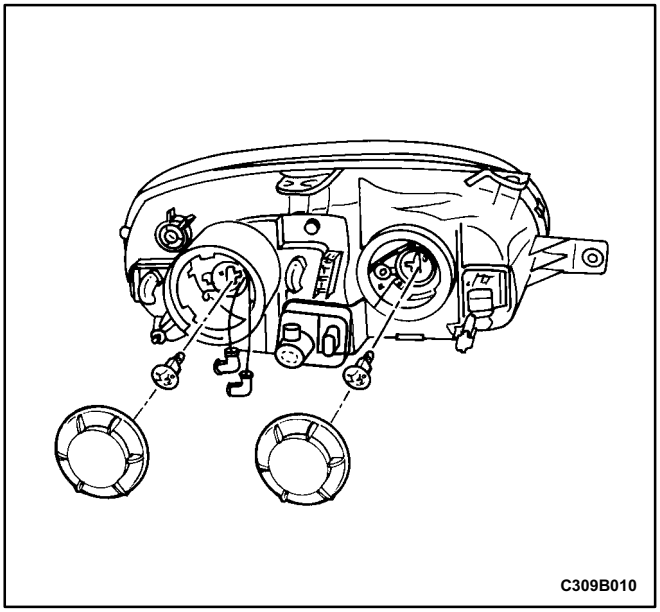

Installation Procedure

1. Install the replacement headlamp bulb.
2. Connect the headlamp bulb electrical connector.
3. Install the cap that conceals the headlamp bulb.

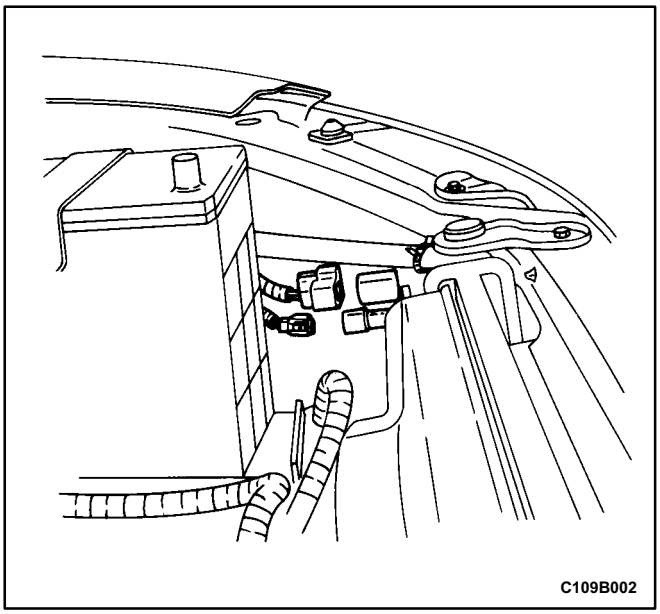

4. Connect the headlamp assembly electrical connectors.

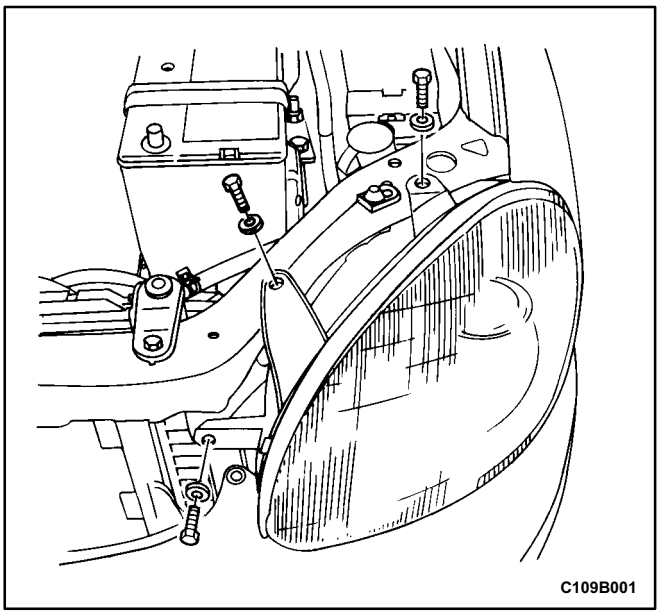

Notice: Dissimilar metals in direct contact with each other may corrode rapidly. Make sure to use the correct fasteners to prevent premature corrosion.

5. Install the headlamp assembly with the bolts.

Tighten

Tighten the headlamp assembly bolts to 4 N•m (35 lb•in).

6. Connect the negative battery cable.

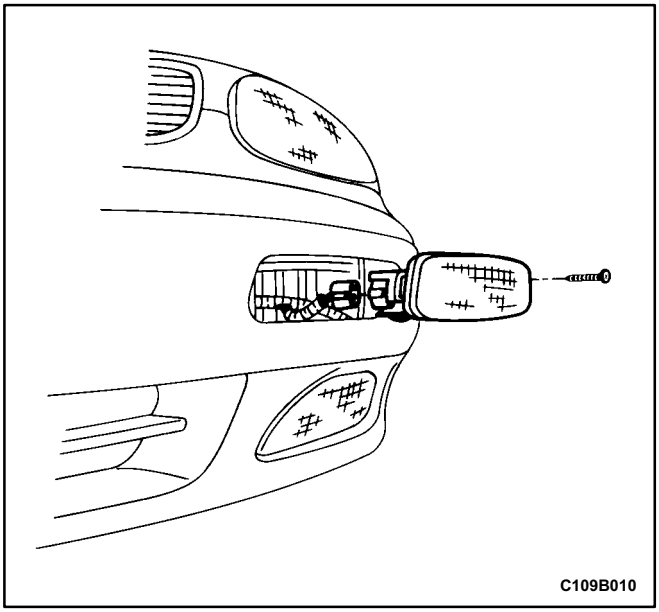

PARKING AND FRONT TURN SIGNAL LAMPS

Removal Procedure

1. Disconnect the negative battery cable.
2. Remove the screw and the front turn signal lamp.
3. Disconnect the electrical connector.
4. Twist and remove the bulb from the front turn signal lamp.

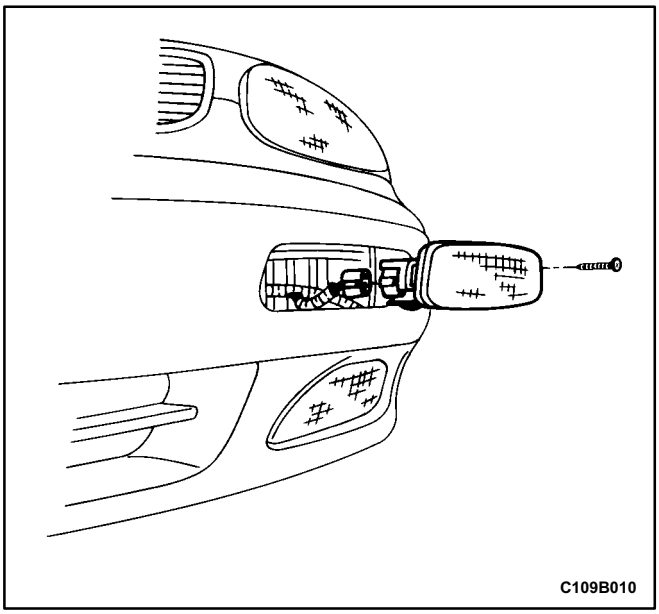

Installation Procedure

1. Insert and twist to install the replacement bulb into the front turn signal lamp.
2. Connect the electrical connector.

Notice: Dissimilar metals in direct contact with each other may corrode rapidly. Make sure to use the correct fasteners to prevent premature corrosion.

3. Install the front turn signal lamp with the screw.

   Tighten

   Tighten the front turn signal lamp screw to 2 N•m (18 lb•in).
4. Connect the negative battery cable.

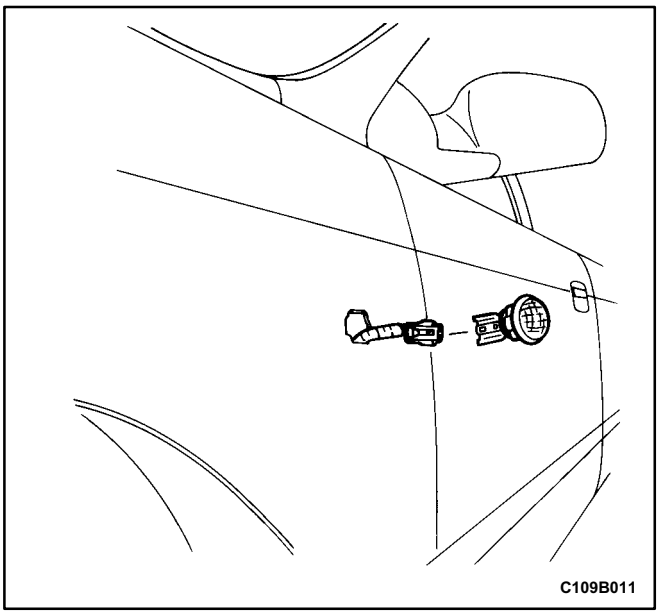

SIDE TURN SIGNAL LAMPS

Removal Procedure

1. Disconnect the negative battery cable.
2. Slide the side turn signal lamp to the left.
3. Remove the side turn signal lamp from the fender.
4. Disconnect the electrical connector.
5. Twist and remove the bulb from the side turn signal lamp.

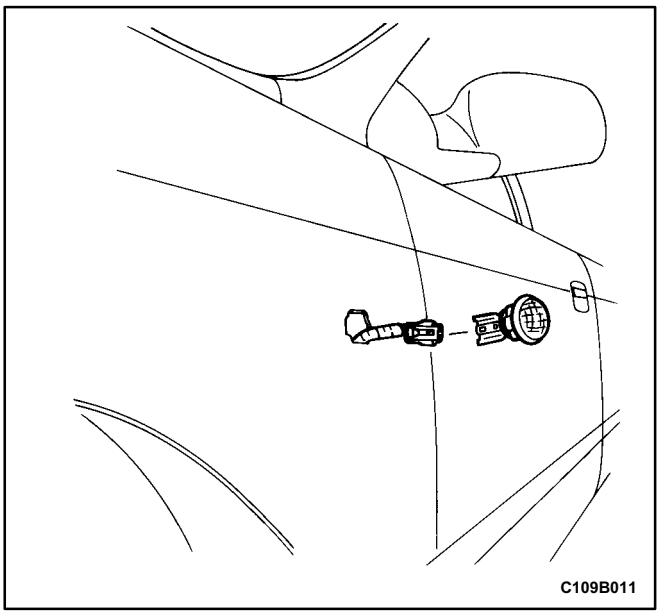

Installation Procedure

1. Insert and twist to install the replacement bulb into the side turn signal lamp.
2. Connect the electrical connector.
3. Install the side turn signal lamp into the fender.
4. Connect the negative battery cable.

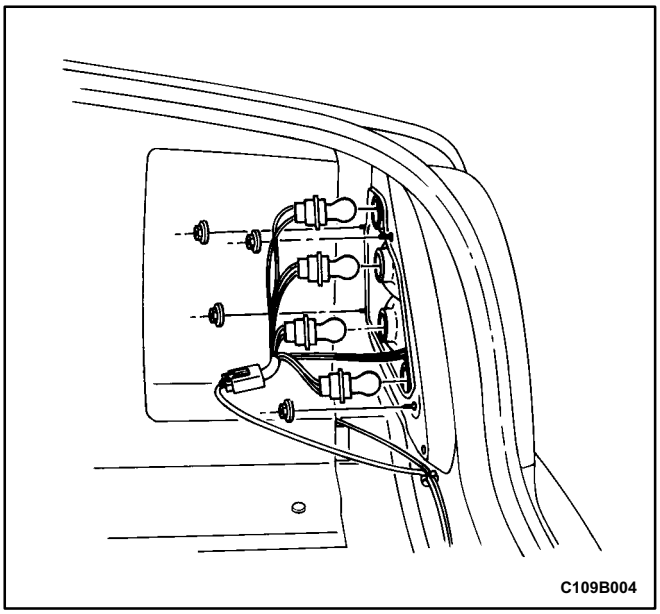

REAR COMBINATION LAMPS

Removal Procedure

1. Disconnect the negative battery cable.
2. Remove the rear luggage compartment trim panel.
3. Disconnect the electrical connectors.
4. Remove the nuts and the lamp assembly.
5. Remove any inoperative bulb.

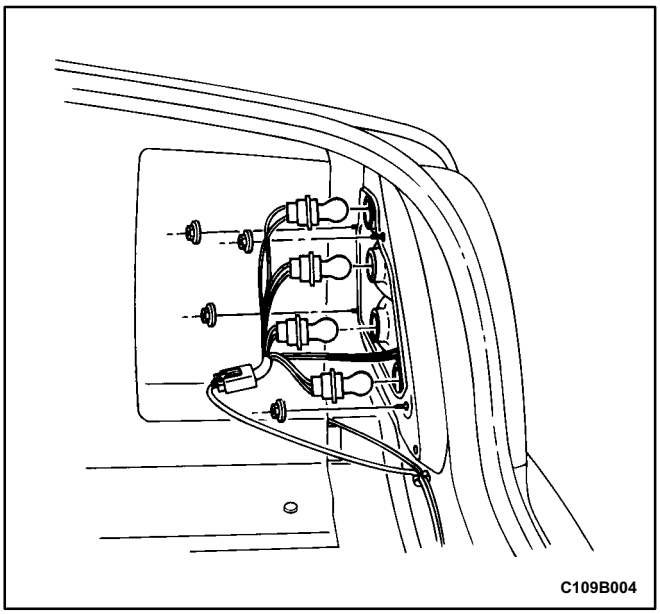

Installation Procedure

1. Install the replacement bulbs.

Notice: Dissimilar metals in direct contact with each other may corrode rapidly. Make sure to use the correct fasteners to prevent premature corrosion.

2. Install the lamp assembly with the nuts.

   Tighten

   Tighten the rear combination lamp assembly nuts to 2 N•m (18 lb•in).
3. Connect the electrical connectors.
4. Install the rear luggage compartment trim panel.
5. Connect the negative battery cable.

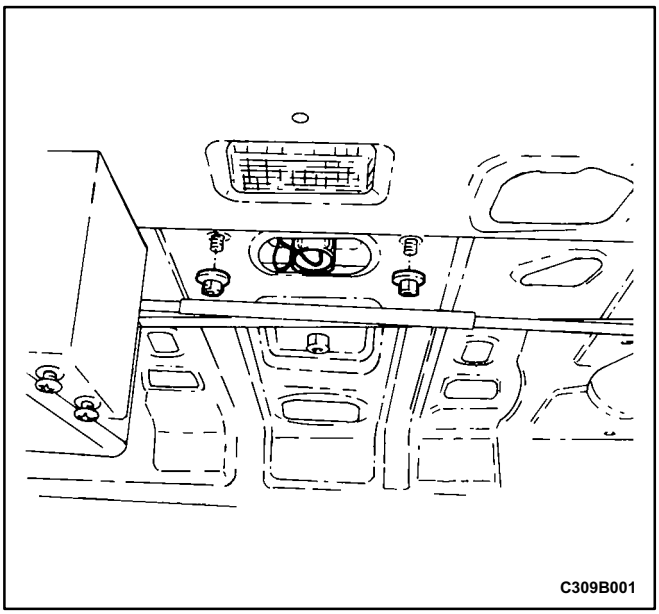

CENTER HIGH-MOUNTED STOPLAMP

Removal Procedure

1. Disconnect the negative battery cable.
2. Open the rear deck lid.
3. Remove the nuts and the center highmounted stoplamp (CHMSL).
4. Disconnect the electrical connector.
5. Remove the CHMSL bulb.

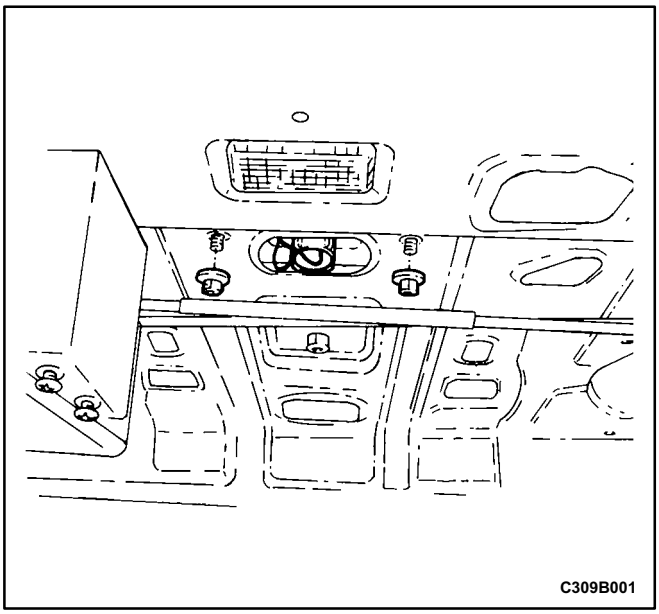

Installation Procedure

1. Install a replacement CHMSL bulb.
2. Connect the electrical connector.

Notice: Dissimilar metals in direct contact with each other may corrode rapidly. Make sure to use the correct fasteners to prevent premature corrosion.

3. Install the CHMSL with the nuts.

   Tighten

   Tighten the CHMSL nuts to 4 N•m (35 lb•in).
4. Connect the negative battery cable.

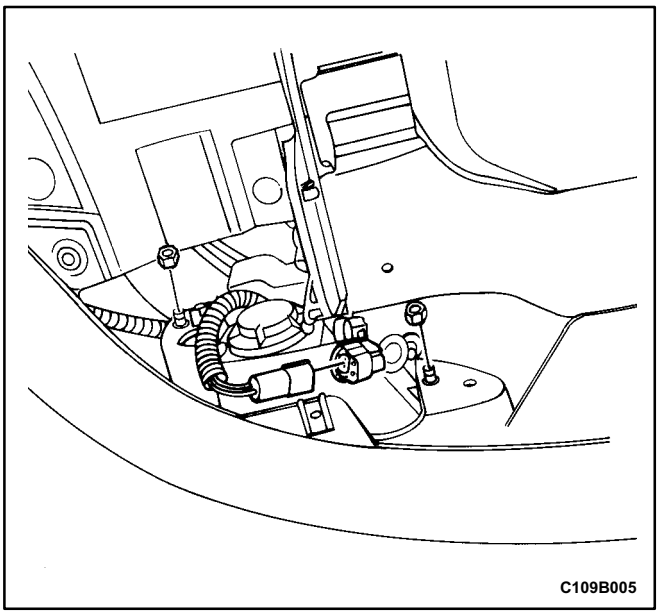

FRONT FOG LAMPS

Removal Procedure

1. Disconnect the negative battery cable.
2. Remove the nuts that secure the fog lamp assembly.
3. Remove the fog lamp assembly.
4. Disconnect the fog lamp assembly electrical connector.

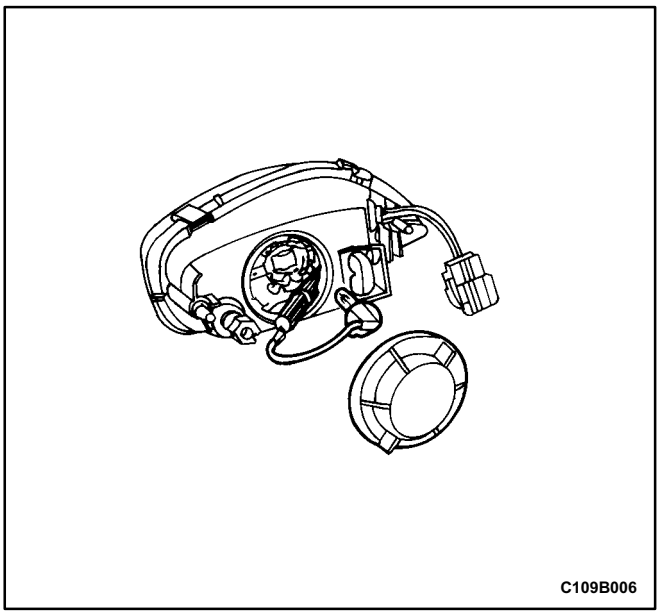

5. Remove the fog lamp access cover.
6. Remove the retaining wire.
7. Remove the bulb from the fog lamp assembly.
8. Disconnect the bulb electrical connector.

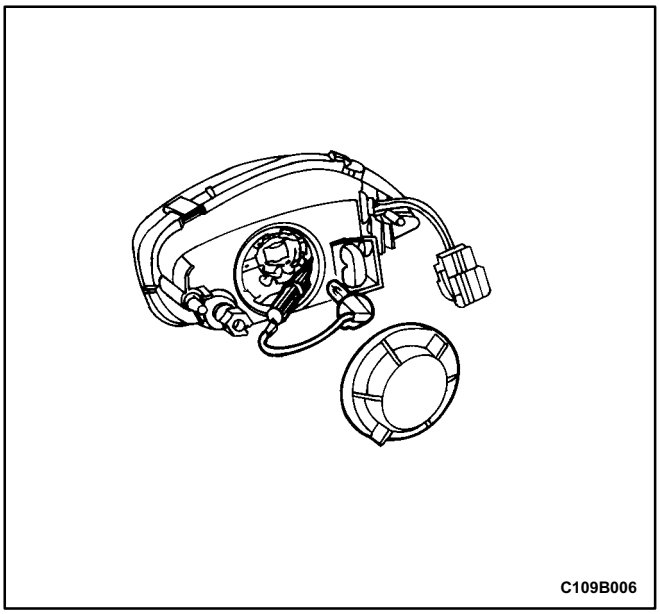

Installation Procedure

1. Connect the bulb electrical connector.
2. Install the replacement bulb into the fog lamp assembly.
3. Install the retaining wire.
4. Install the fog lamp access cover.

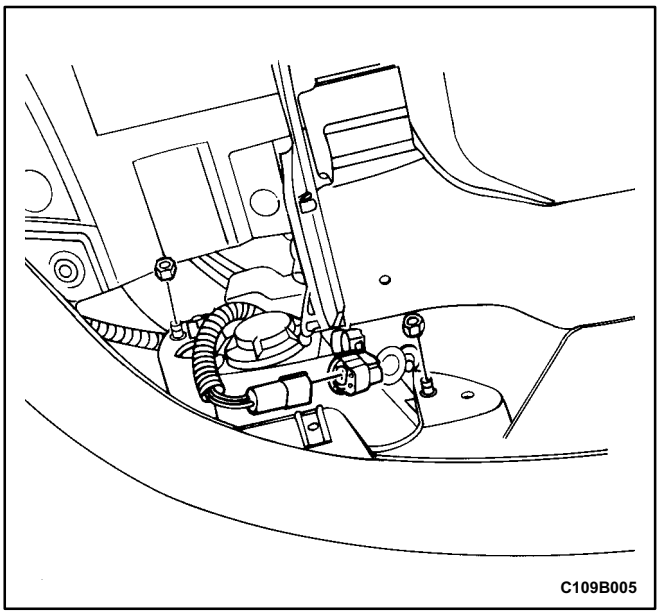

Notice: Dissimilar metals in direct contact with each other may corrode rapidly. Make sure to use the correct fasteners to prevent premature corrosion.

5. Install the fog lamp assembly with the nuts.
6. Connect the fog lamp assembly electrical connector.

Tighten

Tighten the front fog lamp assembly nuts to 4 N•m (35 lb•in).

7. Connect the negative battery cable.

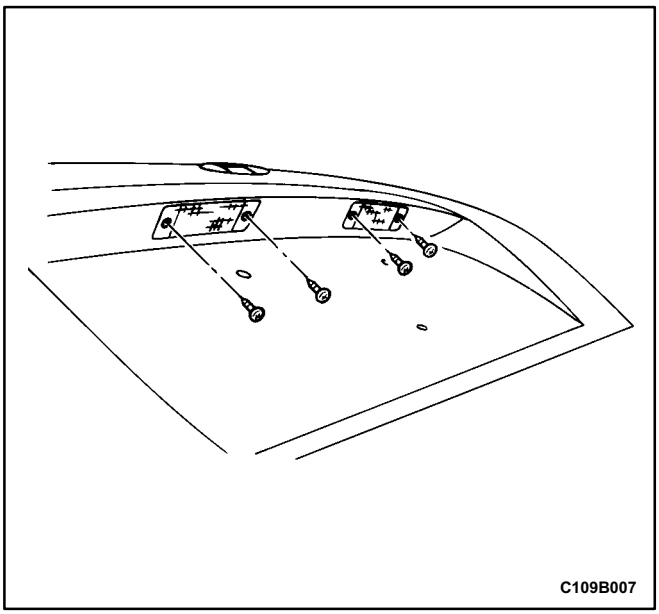

LICENSE PLATE LAMPS

Removal Procedure

1. Disconnect the negative battery cable.
2. Remove the screws and the license plate lamp assembly.
3. Remove the bulb.

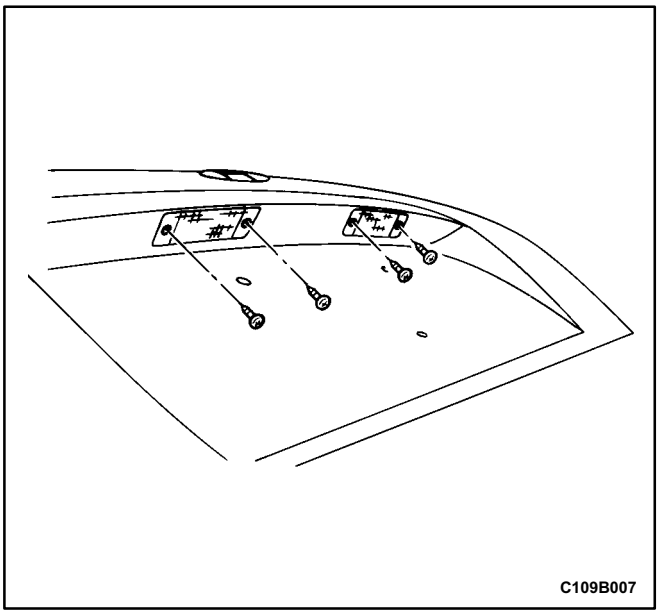

Installation Procedure

1. Install a replacement bulb.

Notice: Dissimilar metals in direct contact with each other may corrode rapidly. Make sure to use the correct fasteners to prevent premature corrosion.

2. Install the license plate lamp assembly with the screws.

Tighten

Tighten the license plate lamp assembly screws to 2 N•m (18 lb•in).

3. Connect the negative battery cable.

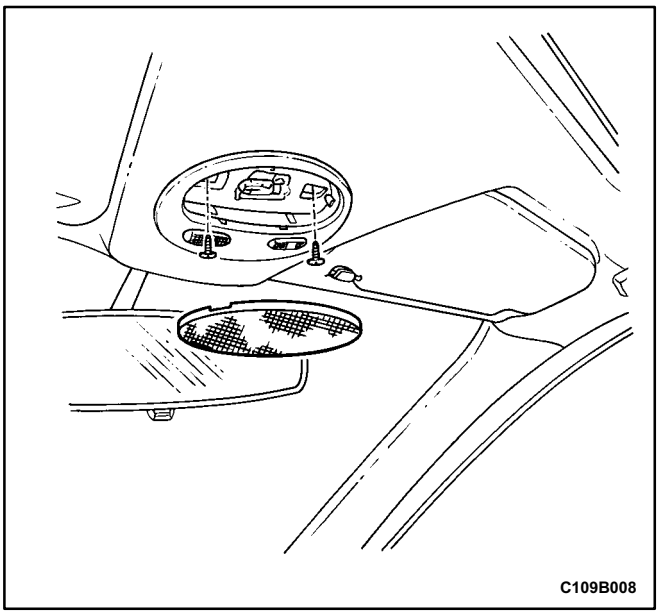

INTERIOR COURTESY LAMP

Removal Procedure

1. Disconnect the negative battery cable.
2. Pry off the courtesy lamp lens by inserting a screwdriver into the recess along the edge of the lens.
3. Remove the screws and the courtesy lamp housing from the headliner.

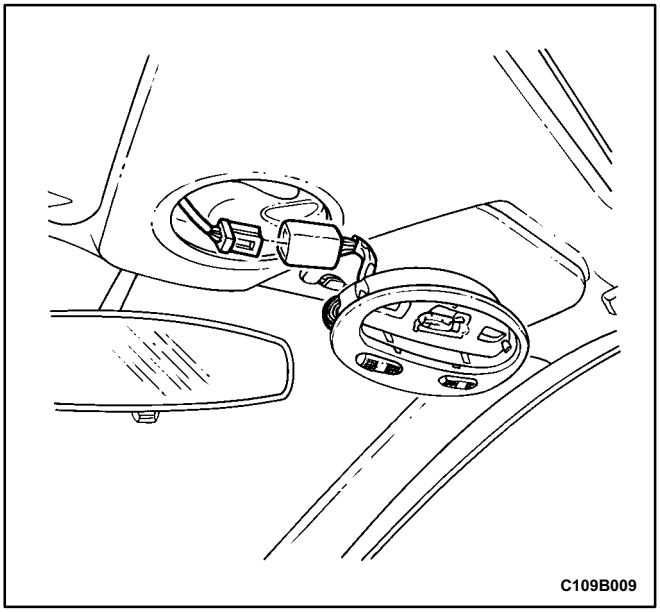

4. Disconnect the electrical connector.
5. Remove the bulb.

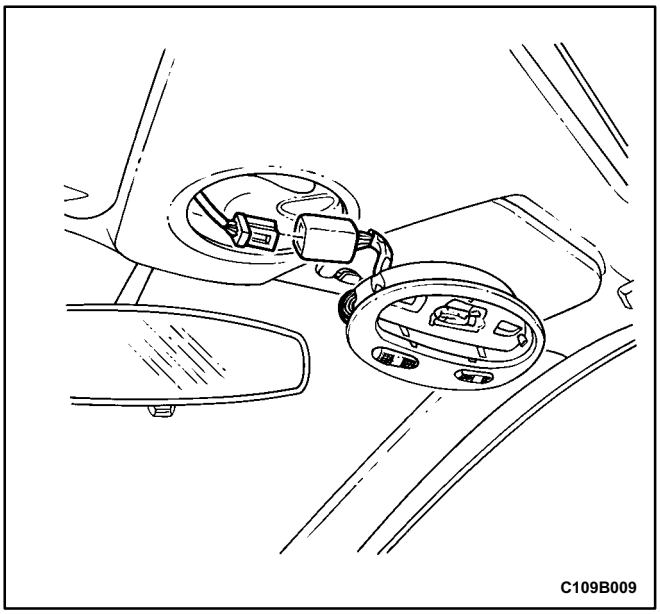

Installation Procedure

1. Install a replacement bulb.
2. Connect the electrical connector.

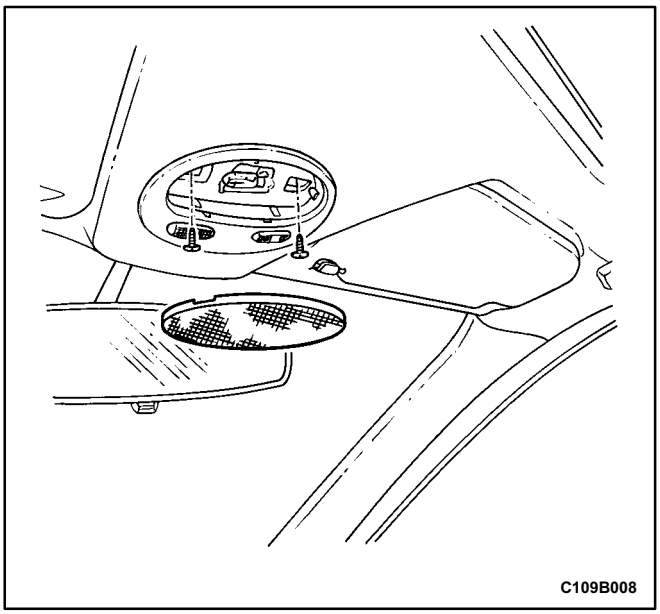

Notice: Dissimilar metals in direct contact with each other may corrode rapidly. Make sure to use the correct fasteners to prevent premature corrosion.

3. Install the interior courtesy lamp housing to the headliner with the screws.

   ### Tighten

   Tighten the interior courtesy lamp housing screw to 2 N•m (18 lb•in).
4. Press the interior courtesy lamp lens onto the housing.
5. Connect the negative battery cable.

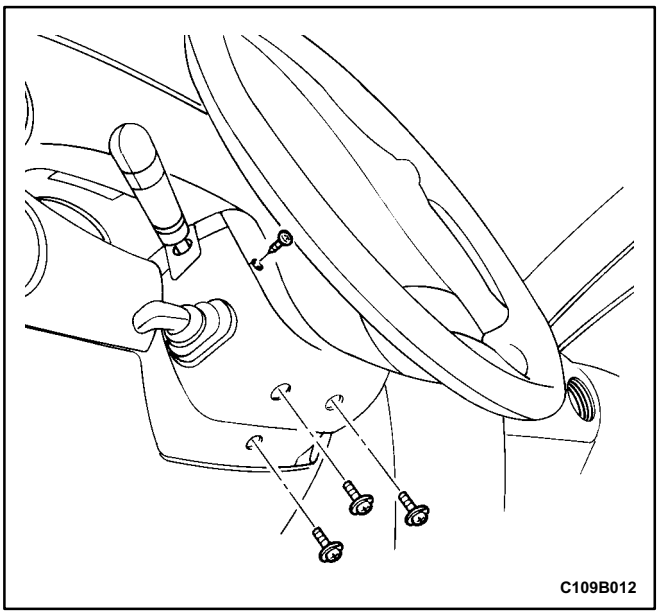

IGNITION SWITCH KEYHOLE LAMP

(Left-Hand Drive Shown, Right-Hand Drive Similar)

Removal Procedure

1. Disconnect the negative battery cable.
2. Remove the knee bolster trim panel.
3. Remove the screws and the steering column trim covers.

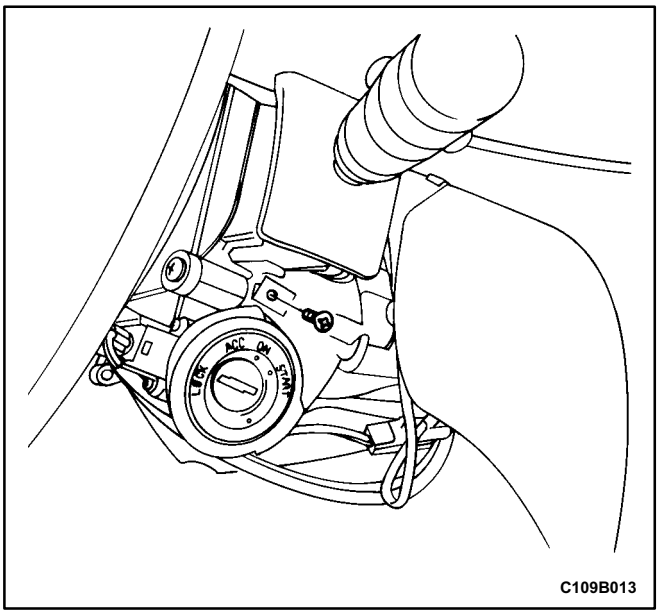

4. Remove the screw and the ignition switch keyhole lamp.
5. Remove the bulb.

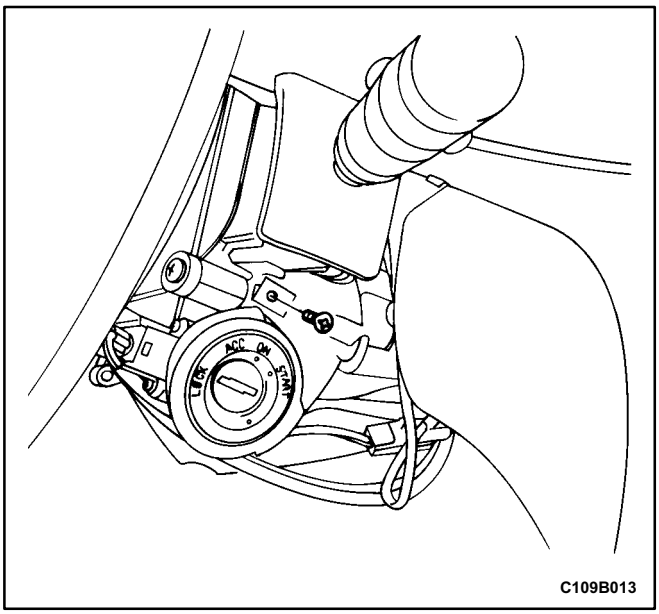

Installation Procedure

1. Install the replacement bulb into the ignition switch keyhole lamp.

Notice: Dissimilar metals in direct contact with each other may corrode rapidly. Make sure to use the correct fasteners to prevent premature corrosion.

2. Install the ignition switch keyhole lamp with the screw.

   Tighten

   Tighten the ignition switch keyhole lamp screw to 1.5 N•m (13 lb•in).

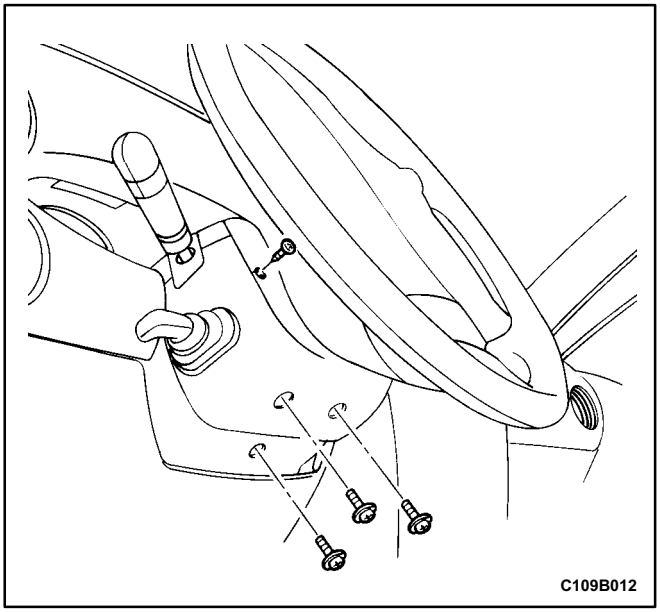

Notice: Dissimilar metals in direct contact with each other may corrode rapidly. Make sure to use the correct fasteners to prevent premature corrosion.

3. Install the steering column trim covers with the screws.

   Tighten

   Tighten the steering column trim cover screws to 3.5 N•m (lb•in).
4. Install the knee bolster trim panel.
5. Connect the negative battery cable.

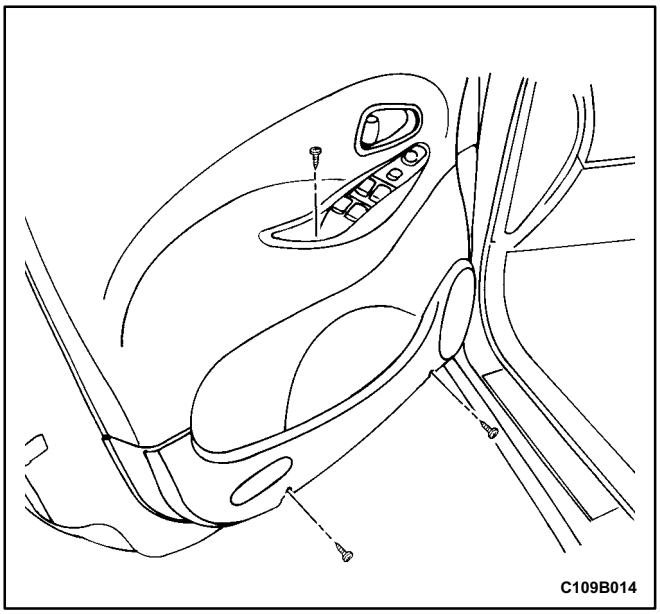

FRONT DOOR STEP LAMP

(Left-Hand Drive Shown, Right-Hand Drive Similar)

Removal Procedure

1. Disconnect the negative battery cable.
2. Remove the front door step lamp lens cover.
3. Remove the front door trim panel screws.

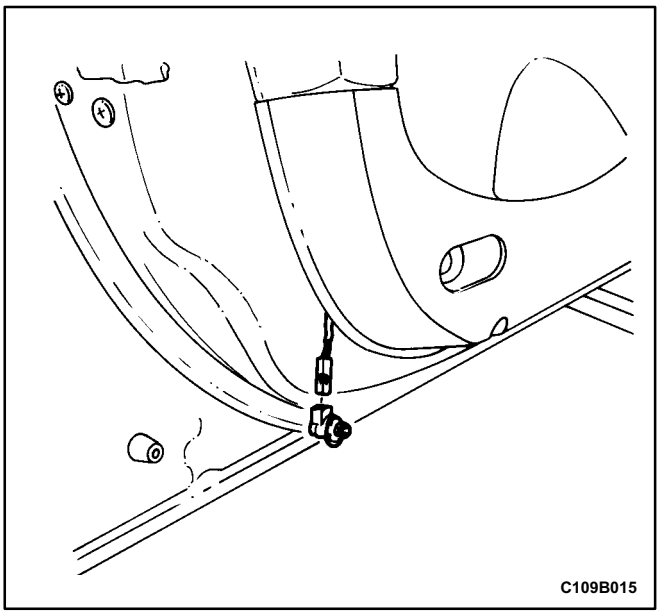

4. Reposition the lower half of the front door trim panel.
5. Remove the front door step lamp.
6. Disconnect the electrical connector.

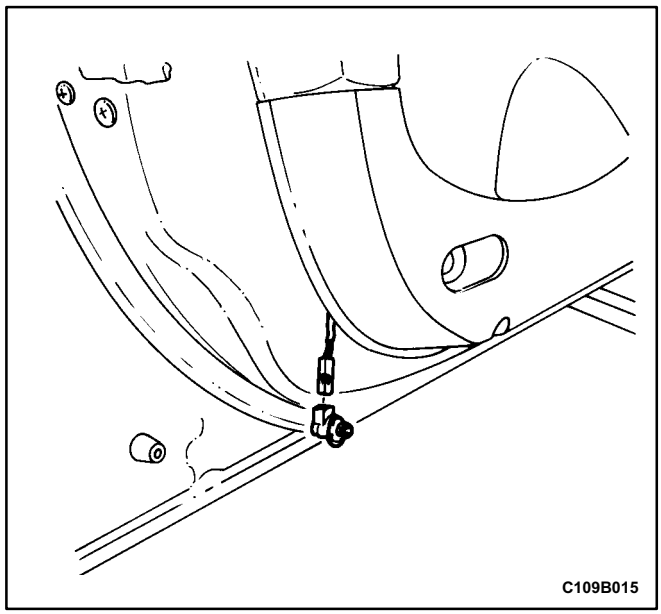

Installation Procedure

1. Connect the electrical connector.
2. Install the replacement front door step lamp bulb.
3. Install the lower half of the door trim panel to its original position.

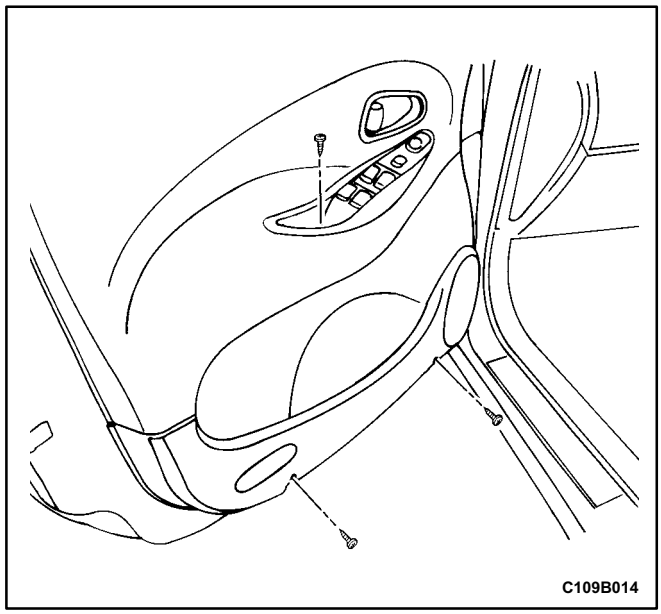

Notice: Dissimilar metals in direct contact with each other may corrode rapidly. Make sure to use the correct fasteners to prevent premature corrosion.

4. Install the front door trim panel screws.

   Tighten

   Tighten the front door trim panel screws to 3.5 N•m (31 lb•in).
5. Install the front door step lamp lens cover.
6. Connect the negative battery cable.

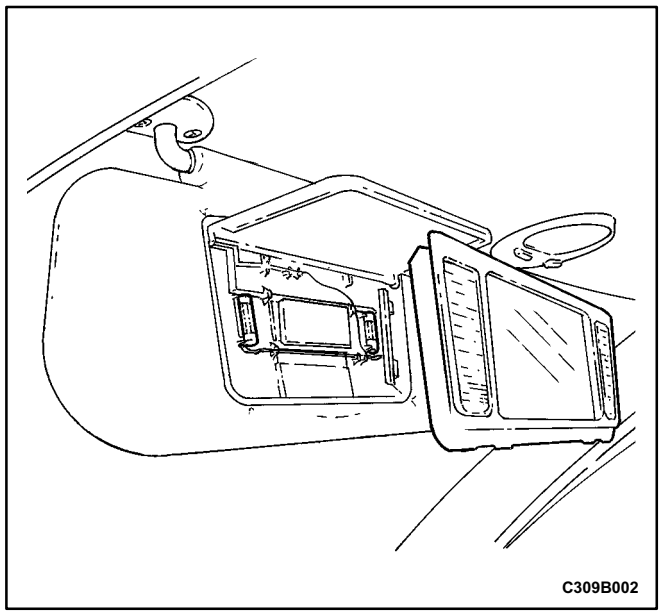

VANITY MIRROR LAMP

Removal Procedure

1. Disconnect the negative battery cable.
2. Pry off the vanity mirror lamp lens by inserting a screwdriver into the recess along the bottom edge of the lens.
3. Remove the inoperative bulb.

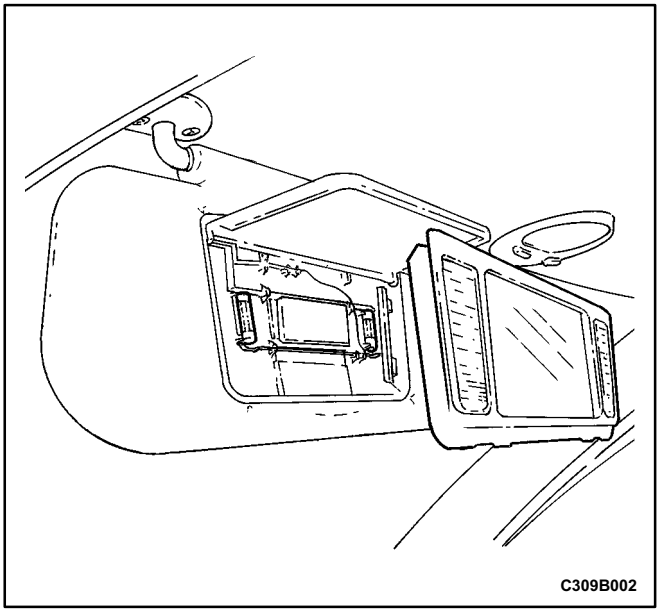

Installation Procedure

1. Install a replacement bulb.
2. Press the vanity mirror lamp lens onto the housing.
3. Connect the negative battery cable.

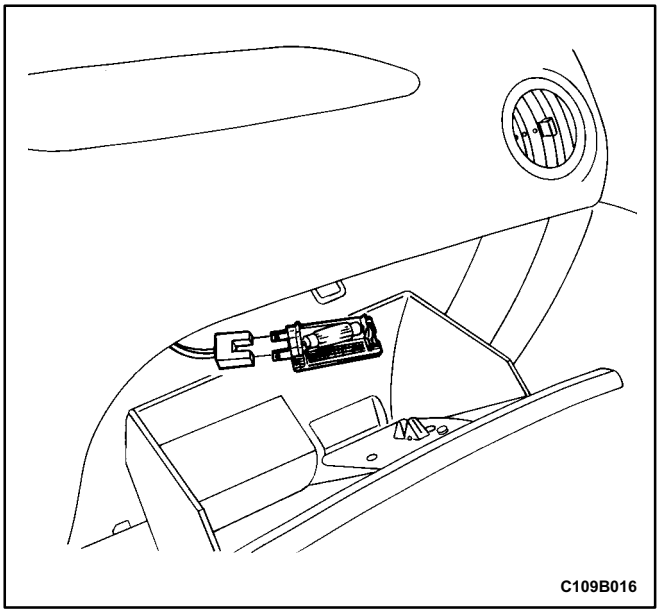

GLOVE BOX LAMP

(Left-Hand Drive Shown, Right-Hand Drive Similar)

Removal Procedure

1. Disconnect the negative battery cable.
2. Open the glove box.
3. Remove the glove box lamp.
4. Disconnect the electrical connector.

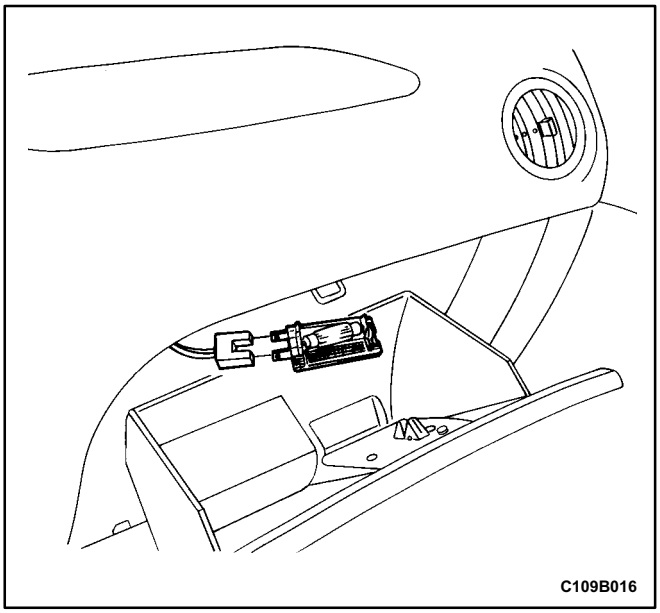

Installation Procedure

1. Connect the electrical connector.
2. Install the glove box lamp.
3. Close the glove box.
4. Connect the negative battery cable.

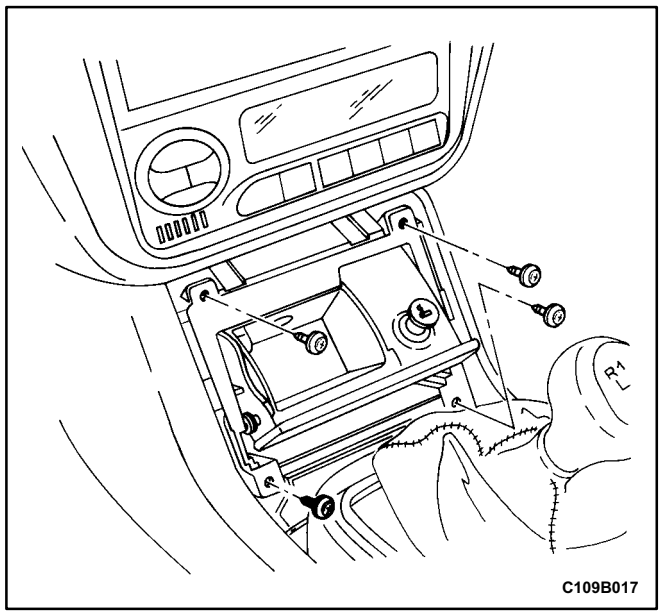

ASHTRAY LAMP

(Left-Hand Drive Shown, Right-Hand Drive Similar)

Removal Procedure

1. Disconnect the negative battery cable.
2. Remove the shift lever trim plate.
3. Remove the screws and the ashtray housing.

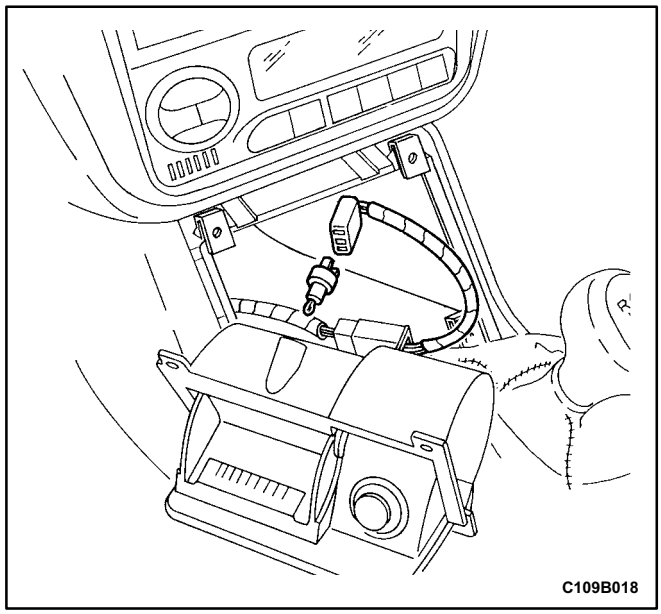

4. Remove the bulb from the ashtray lamp housing.
5. Disconnect the bulb from the ashtray lamp housing electrical connector.

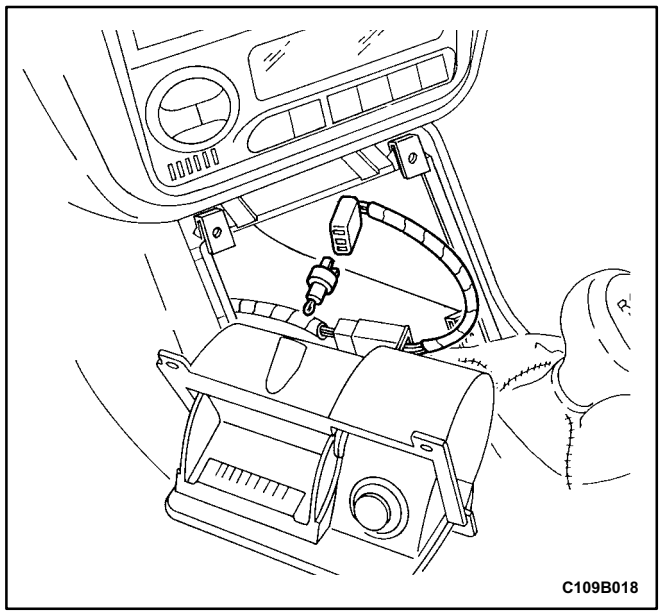

Installation Procedure

1. Connect the replacement bulb to the ashtray lamp housing electrical connector.
2. Install the replacement bulb into the ashtray lamp housing.

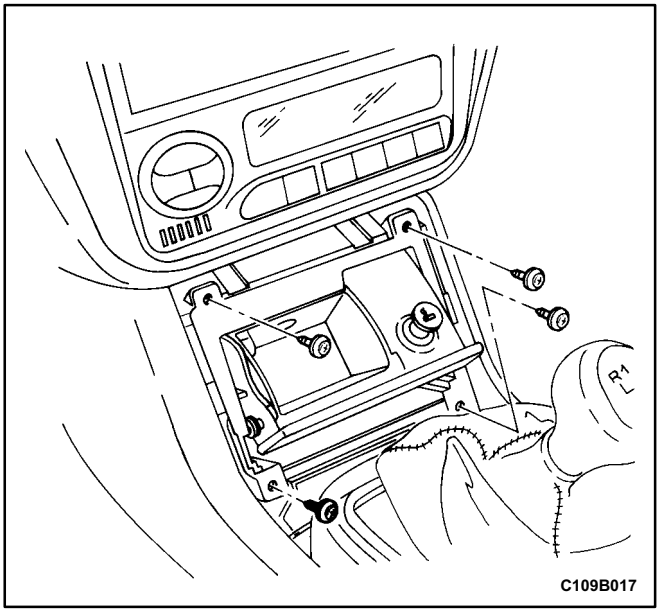

Notice: Dissimilar metals in direct contact with each other may corrode rapidly. Make sure to use the correct fasteners to prevent premature corrosion.

3. Install the ashtray housing with the screws.

Tighten

Tighten the ashtray housing screws to 3.5 N•m (lb•in).

4. Install the shift lever trim plate.
5. Connect the negative battery cable.

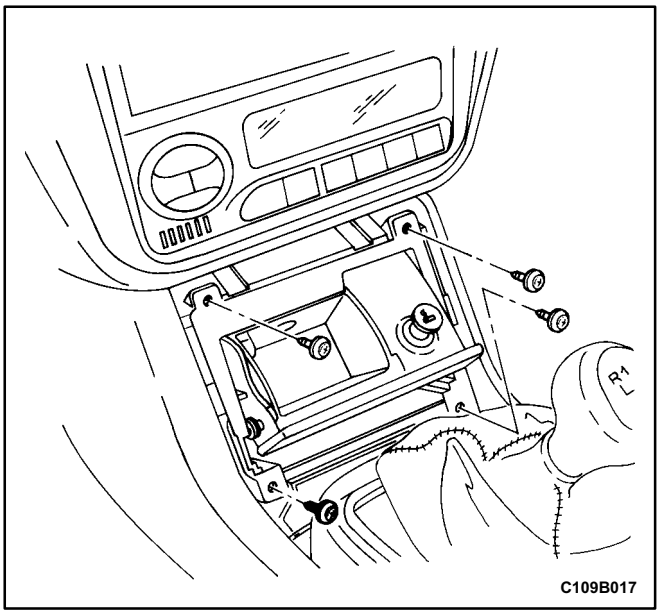

CIGAR LIGHTER LAMP

Removal Procedure

1. Disconnect the negative battery cable.
2. Remove the shift lever trim plate.
3. Remove the screws and the ashtray housing.

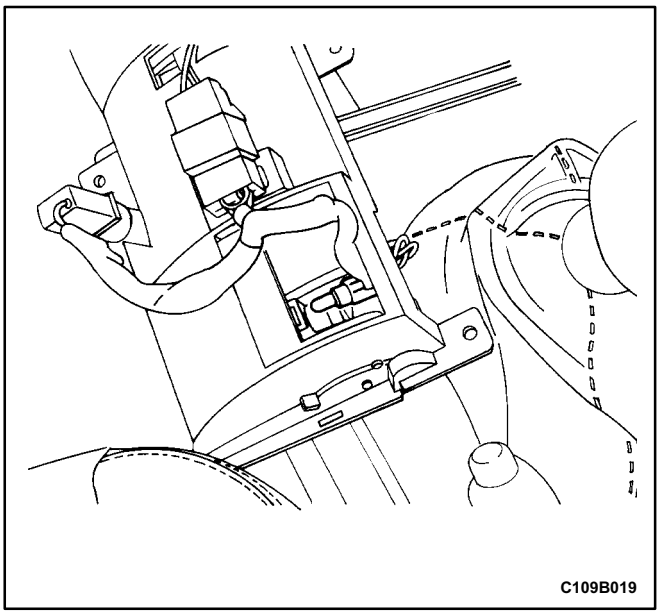

4. Remove the bulb from the cigar lighter lamp housing.
5. Disconnect the bulb from the cigar lighter lamp housing electrical connector.

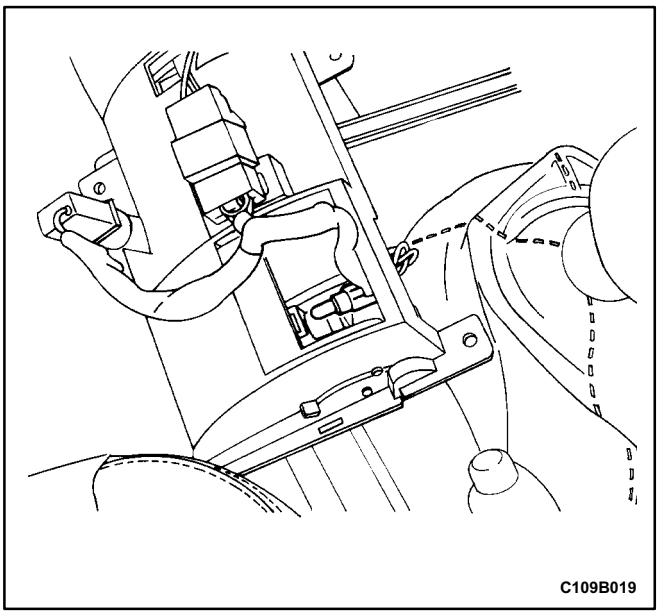

Installation Procedure

1. Connect the replacement bulb to the cigar lighter lamp housing electrical connector.
2. Install the replacement bulb into the cigar lighter lamp housing.

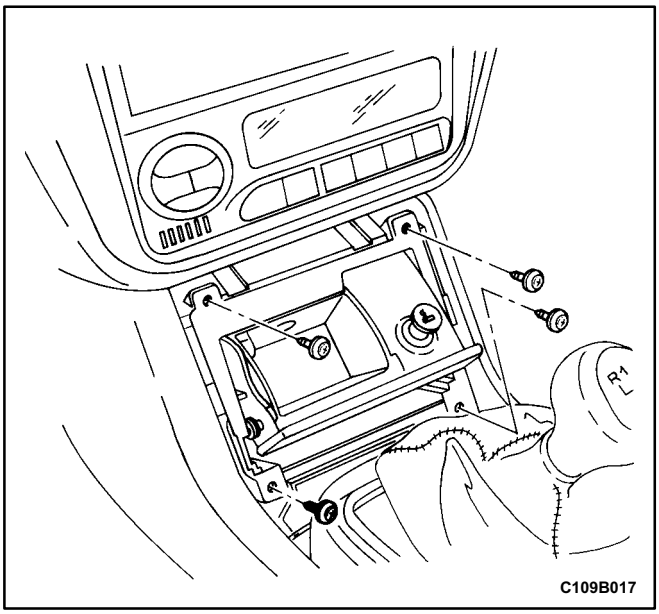

Notice: Dissimilar metals in direct contact with each other may corrode rapidly. Make sure to use the correct fasteners to prevent premature corrosion.

3. Install the ashtray housing with the screws.

   Tighten

   Tighten the ashtray housing screws to 2 N•m (18 lb•in).
4. Install the shift lever trim plate.
5. Connect the negative battery cable.

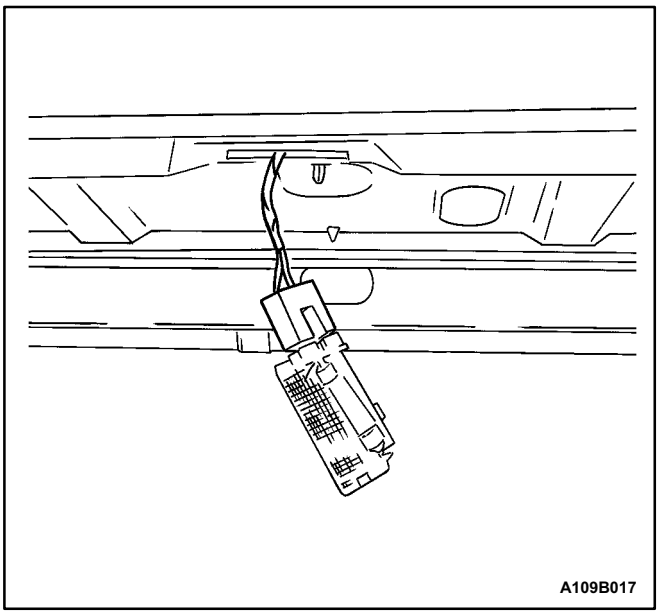

LUGGAGE COMPARTMENT LAMP

Removal Procedure

1. Disconnect the negative battery cable.
2. Remove the luggage compartment lamp.
3. Disconnect the electrical connector.
4. Remove the bulb.

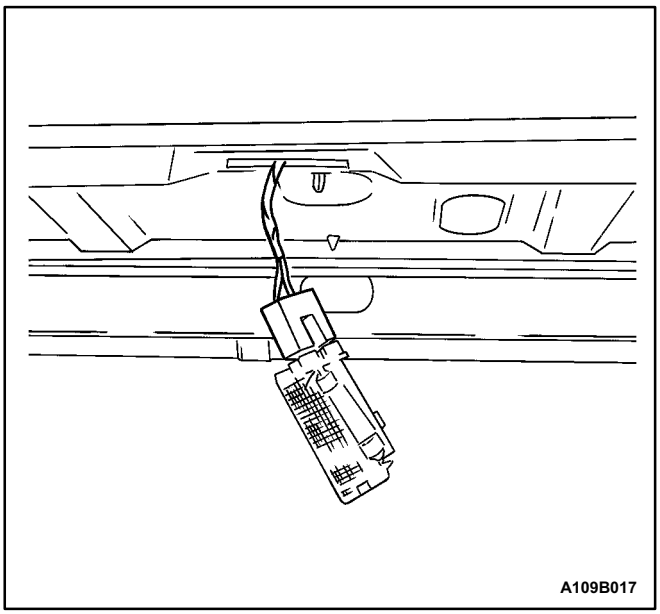

Installation Procedure

1. Install a replacement bulb.
2. Connect the electrical connector.
3. Install the luggage compartment lamp.
4. Connect the negative battery cable.

GENERAL DESCRIPTION AND SYSTEM OPERATION

HEADLAMPS-ON REMINDER

When the headlamp switch is in the headlamps or parking lamps-ON position, voltage is applied to the chime module.

With the headlamp switch ON and the driver's door open, the module loses voltage. The module senses this change. If the voltage is still available, it is applied to sound the chime. The chime can be turned off by turning the headlamp switch to OFF or closing the driver's door. To replace the chime module, refer to *Section 9E, Instrumentation/Driver Information.*

HEADLAMPS

The headlamps are controlled by the multifunction lever located on the left side of the steering column. They will come on with the ignition switch in any position. Turning the headlamp switch to the first position turns on the parking lamps, the license plate lamps, and the instrument panel illumination. Turning the switch to the second position turns ON all of the previous lamps and the headlamps. Turning the switch to the OFF position turns off all the lamps.

Headlamp high beam and low beam are also controlled by this lever. When the headlamps are ON, pushing the lever away from the driver until the switch clicks changes the lamp from low beam to high beam. An indicator lamp on the instrument cluster assembly will come on when the high-beam headlamps are ON. To return the headlamps to low beams, pull the lever toward the driver.

The headlamps must be aimed for proper illumination of the road. Headlamp aim should be checked whenever a new headlamp assembly is installed or service or repairs in the front end may have disturbed the headlamp assembly or its mountings.

PARKING AND TURN SIGNAL LAMPS

The parking lamps can be turned ON by turning the lighting switch to the first position. The parking lamps can be turned OFF by turning the switch to the OFF position.

When the turn signals are activated, the appropriate turn signal lamps flash to signal a turn. The front, rear, and side turn signals work only when the ignition switch is ON.

The front, rear, and side turn signals are controlled by the light switch on the left side of the steering column. Moving the lever all the way up or down past the detent will turn ON the turn signals. When the turn is complete, the lever will automatically release, and the front, rear, and side turn signals will stop flashing.

For changing lanes or shallow turns, in which the steering wheel does not turn far enough to cancel the signal, move the signal only to the first detent and hold it there. The turn signal will cancel when the lever is released.

FOG LAMPS

The front and rear fog lamp switches are on the instrument panel above the audio system. To use the fog lamps, first turn ON the headlamps or the parking lamps. Then push the appropriate fog lamp switch. The indicator light in the instrument cluster will illuminate to indicate that the fog lamps are ON. Push the switch again to turn OFF the fog lamps. The indicator light will then go off.

The front fog lamps should not be used as a substitute for the headlamps.

The front fog lamps must be aimed for proper illumination of the road. Front fog lamp aim should be checked when a new bulb is installed or if service or repairs in the front end may have disturbed the front fog lamp assembly or its mountings.

REAR COMBINATION LAMPS

The taillamps, stoplamps, backup lamps, turn signals, and rear fog lamps are one assembly.

Turning ON either the headlamps or the parking lamps will also turn on the taillamps. When the brake pedal is pushed, the taillamps will glow more brightly to serve as stoplamps.

CENTER HIGH-MOUNTED STOPLAMP

The center high-mounted stoplamp is located in the rear window and will come on when the brake pedal is pressed.

BACKUP LAMPS

The backup lamps will come on when the transaxle is shifted into reverse. On a vehicle with an automatic transaxle, the backup lamps are activated by the NSBU switch. On a vehicle with a manual transaxle, they are activated by a reverse switch which is part of the transaxle.

LICENSE PLATE LAMPS

The license plate lamps will come on when the headlamps or the parking lamps are ON. The license plate lamps are mounted on the rear deck lid, above the license plate.

INTERIOR COURTESY LAMP

The courtesy lamp is located on the headliner. The lamp switch has three positions. If the switch is left in the center position, the lamp will go on whenever a door is opened and go off when it is closed. In the ON position, the lamp will stay on until it is turned OFF. In the OFF position, the lamp will not come on, even when a door is opened.

ILLUMINATED VANITY MIRRORS

The illuminated vanity mirrors are located on the back of both sun visors. The sun visors contain an internal switch. When the mirror cover is opened, the switch is closed, and the vanity mirror bulbs illuminate. When the cover is closed, the switch is opened, and the vanity mirror bulbs turn off.

ASHTRAY LAMP AND CIGAR LIGHTER

An ashtray lamp is mounted above the ashtray. An illumination ring lamp is mounted around the cigar lighter. Both lamps will come on when the parking lamps or the headlamps are turned ON.

LUGGAGE COMPARTMENT LAMP

The luggage compartment lamp is located under the deck lid sill plate. It will come on whenever the luggage compartment is opened.

HEADLAMP LEVELING

The headlamp leveling switch is on the instrument panel to the left of the steering wheel. The headlamp leveling adjusts the headlamps up or down when the low-beam headlamps are ON. A headlamp leveling motor is attached to the rear of both headlamps. To replace the headlamp leveling switch, refer to *Section 9E, Instrumentation/Driver Information.*

SECTION 9C

HORNS

CAUTION: Disconnect the negative battery cable before removing or installing any electrical unit or when a tool or equipment could easily come in contact with exposed electrical terminals. Disconnecting this cable will help prevent personal injury and damage to the vehicle. The ignition must also be in LOCK unless otherwise noted.

TABLE OF CONTENTS

Specifications 9C-1
Fastener Tightening Specifications 9C-1
Schematic and Routing Diagrams 9C-2
Horn Wiring System 9C-2
Maintenance and Repair 9C-3
On-Vehicle Service 9C-3
Dual Horns 9C-3
General Description and System Operation 9C-4
Horns 9C-4

SPECIFICATIONS

FASTENER TIGHTENING SPECIFICATIONS

Application	N•m	Lb-Ft	Lb-In
Horn Bolt	22	16	–

SCHEMATIC AND ROUTING DIAGRAMS

HORN WIRING SYSTEM

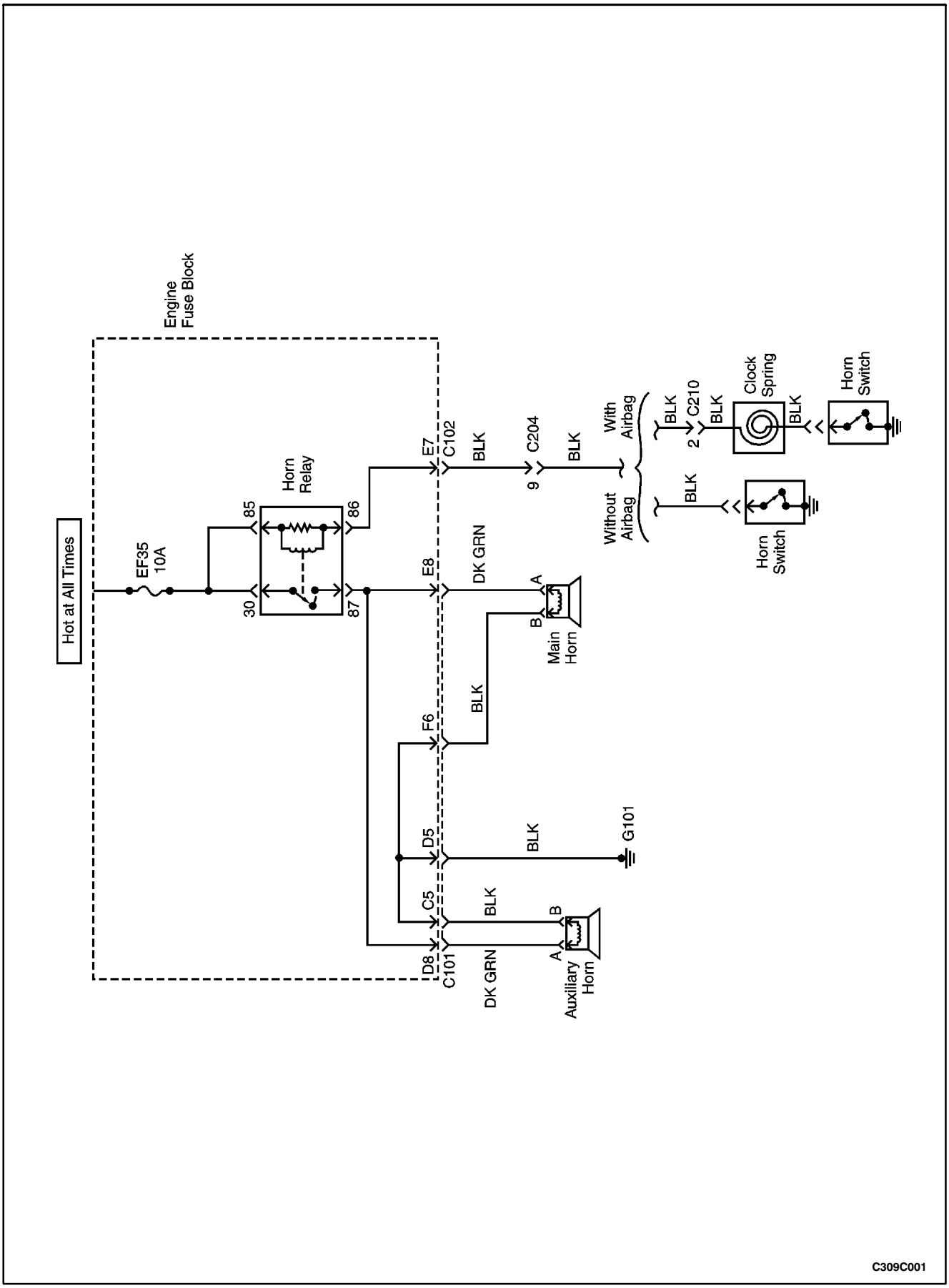

MAINTENANCE AND REPAIR

ON-VEHICLE SERVICE

DUAL HORNS

Removal Procedure

1. Disconnect the negative battery cable.
2. Disconnect the electrical connector.
3. Remove the bolt and the horn (left side horn shown, right side horn located on the right side of the radiator).

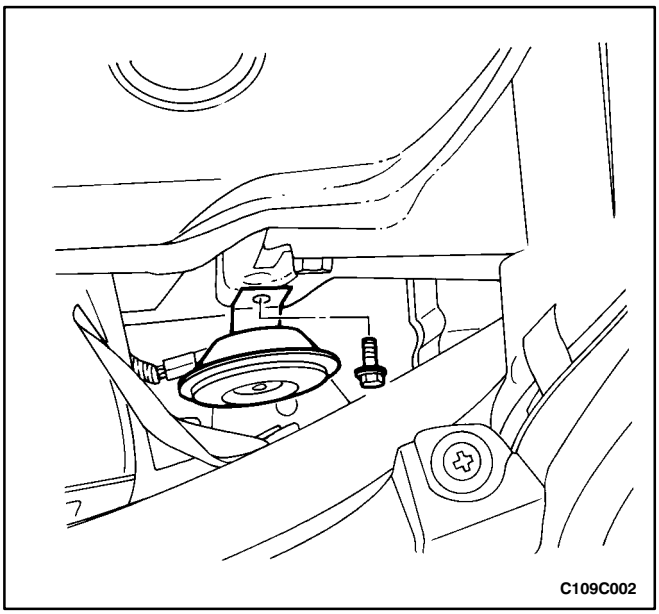

Installation Procedure

Notice: Dissimilar metals in direct contact with each other may corrode rapidly. Make sure to use the correct fasteners to prevent premature corrosion.

1. Install the horn with the bolt (left side horn shown, right side horn located on the right side of the radiator).

   Tighten

   Tighten the horn bolt to 22 N•m (16 lb-ft).
2. Connect the electrical connector.
3. Connect the negative battery cable.

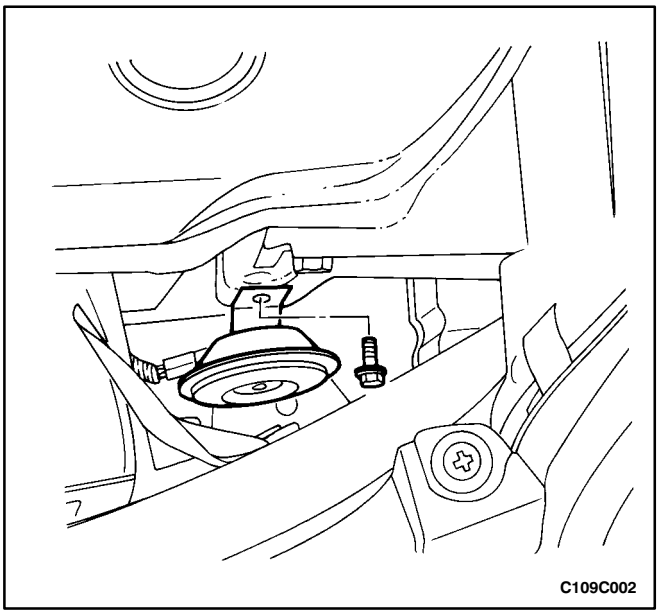

GENERAL DESCRIPTION AND SYSTEM OPERATION

HORNS

The horns are located under the hood. They are attached near the radiator at the front of the vehicle. The horns are actuated by pressing the steering wheel pad, which grounds the horns' electrical circuit.

SECTION 9D

WIPERS/WASHER SYSTEMS

CAUTION: Disconnect the negative battery cable before removing or installing any electrical unit or when a tool or equipment could easily come in contact with exposed electrical terminals. Disconnecting this cable will help prevent personal injury and damage to the vehicle. The ignition must also be in LOCK unless otherwise noted.

TABLE OF CONTENTS

Specifications 9D-1
Fastener Tightening Specifications 9D-1
Schematic and Routing Diagrams 9D-2
Windshield Wipers and Washer System 9D-2
Diagnosis 9D-3
Two-Speed Intermittent Windshield Wipers . . . 9D-3
Windshield Washer System 9D-7
Maintenance and Repair 9D-8
On-Vehicle Service 9D-8
Windshield Wiper Arm 9D-8
Windshield Wiper Motor 9D-8
Windshield Wiper Blade 9D-10
Windshield Wiper Blade Insert 9D-11
Windshield Washer Reservoir 9D-12
Windshield Washer Pump 9D-13
Windshield Washer Nozzles 9D-14
Windshield Washer Hoses 9D-14
General Description and System Operation 9D-16
Windshield Wiper System 9D-16
Windshield Washer System 9D-16

SPECIFICATIONS

FASTENER TIGHTENING SPECIFICATIONS

Application	N•m	Lb-Ft	Lb-In
Cowl Vent Grille Screw	2.5	–	22
Washer Fluid Reservoir Bolts	9	–	80
Wiper Arm Linkage Nut	16	12	–
Wiper Arm Nut	7	–	62
Wiper Motor Bolts	4	–	36

SCHEMATIC AND ROUTING DIAGRAMS

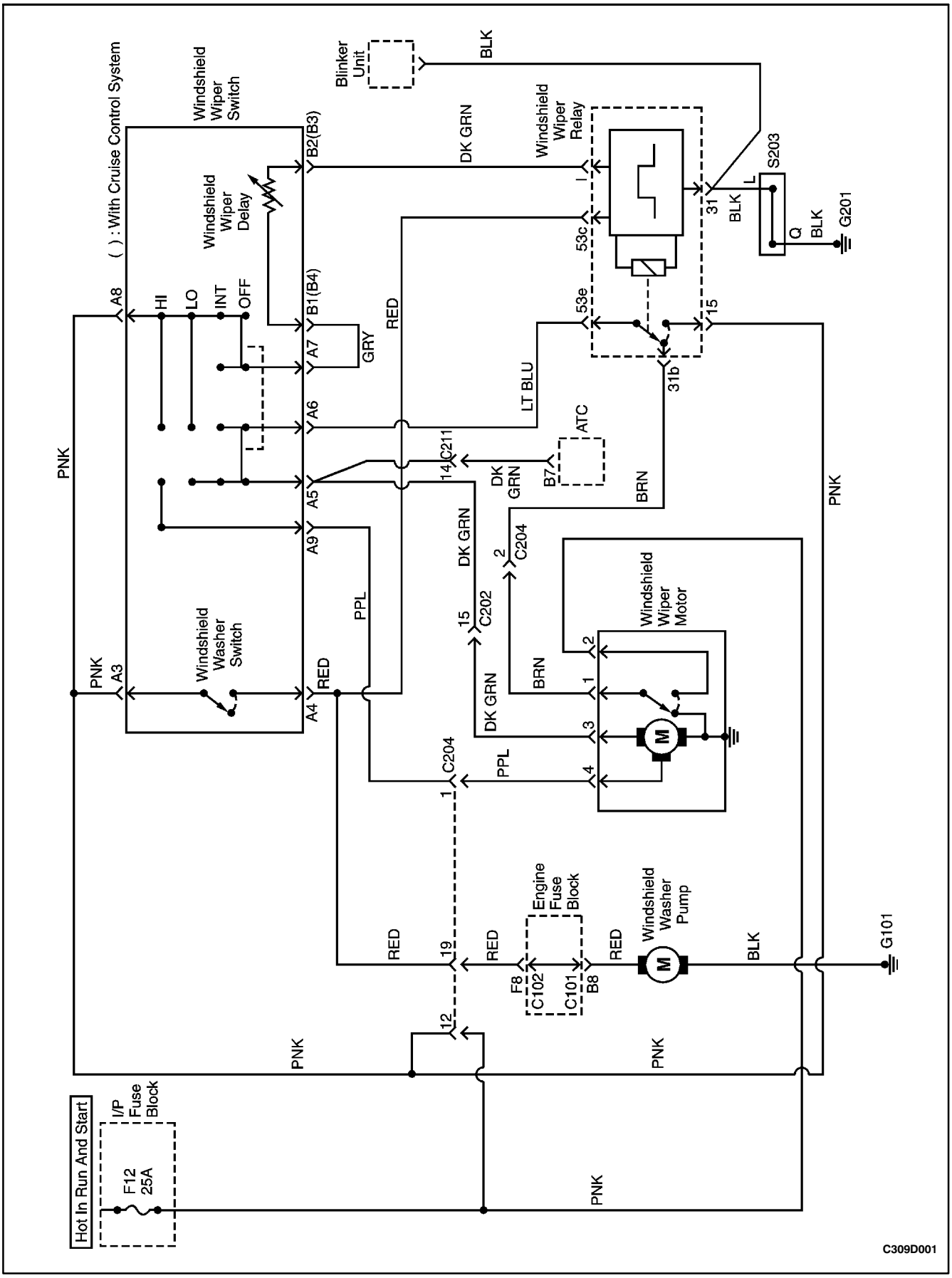

DIAGNOSIS

TWO-SPEED INTERMITTENT WINDSHIELD WIPERS

Windshield Wipers Do Not Work At Any Speed

Step	Action	Value	Yes	No
1	Check fuse F12. Is fuse F12 blown?	–	Go to *Step 2*	Go to *Step 3*
2	1. Check for a short circuit and repair if necessary. 2. Replace the fuse. Is the repair complete?	–	System OK	–
3	Check the voltage at fuse F12. Is the voltage equal to the specified value?	11-14 V	Go to *Step 5*	Go to *Step 4*
4	Repair the open power supply circuit to fuse F12. Is the repair complete?	–	System OK	–
5	1. Disconnect the wiper motor connector. 2. Turn the ignition ON. 3. Turn the wiper switch to HI. 4. Check the voltage at the wiper motor connector terminal 4. Is the voltage equal to the specified value?	11-14 V	Go to *Step 6*	Go to *Step 7*
6	Replace the wiper motor. Is the repair complete?	–	System OK	–
7	1. The wiper switch is still disconnected. 2. Turn the ignition ON. 3. Check for battery voltage at the wiper switch connector terminal A8. Is the voltage equal to the specified value?	11-14 V	Go to *Step 9*	Go to *Step 8*
8	Repair the open circuit between the wiper switch connector terminal A8 and fuse F12. Is the repair complete?	–	System OK	–
9	1. The wiper switch is still disconnected. 2. Turn the wiper switch to HI. 3. Use an ohmmeter to check for continuity between the wiper switch connector terminal A8 and A9. Does the ohmmeter indicate the specified value?	0 Ω	Go to *Step 11*	Go to *Step 10*
10	Replace the wiper switch. Is the repair complete?	–	System OK	–
11	Repair the open circuit between the wiper switch and the wiper motor. Is the repair complete?	–	System OK	–

Windshield Wipers Do Not Work On HI Speed, LO Speed OK

Step	Action	Value	Yes	No
1	1. Turn the ignition ON. 2. Turn the wiper switch to HI. 3. Check voltage at the wiper motor connector terminal 4. Is the voltage equal to the specified value?	11-14 V	Go to *Step 2*	Go to *Step 3*
2	Replace the wiper motor. Is the repair complete?	–	System OK	–
3	1. Disconnect the wiper switch. 2. Turn the wiper switch to HI. 3. Use an ohmmeter to check for continuity between the wiper switch connector terminal A8 and A9. Does the ohmmeter indicate the specified value?	0 Ω	Go to *Step 5*	Go to *Step 4*
4	Replace the wiper switch. Is the repair complete?	–	System OK	–
5	Repair the open circuit between the wiper switch connector terminal A9 and the wiper motor connector terminal 4. Is the repair complete?	–	System OK	–

Windshield Wipers Do Not Work On LO Speed, HI Speed OK

Step	Action	Value	Yes	No
1	1. Turn the ignition ON. 2. Turn the wiper switch to LO. 3. Check the voltage at the wiper motor connector terminal 3. Is the voltage equal to the specified value?	11-14 V	Go to *Step 2*	Go to *Step 3*
2	Replace the wiper motor. Is the repair complete?	–	System OK	–
3	1. Disconnect the wiper switch. 2. Turn the wiper switch to LO. 3. Use an ohmmeter to check for continuity between the wiper switch connector terminal A8 and A5. Does the ohmmeter indicate the specified value?	0 Ω	Go to *Step 5*	Go to *Step 4*
4	Replace the wiper switch. Is the repair complete?	–	System OK	–
5	Repair the open circuit between the wiper switch connector terminal A5 and the wiper motor connector terminal 3. Is the repair complete?	–	System OK	–

Windshield Wipers Do Not Work On Intermittent, Other Speeds OK

Step	Action	Value	Yes	No
1	1. Turn the ignition ON. 2. Use a voltmeter to test voltage at the wiper relay connector terminal 15. Is voltage equal to the specified value?	11-14 V	Go to *Step 3*	Go to *Step 2*
2	Repair the open circuit between the wiper relay connector terminal 15 and fuse F12. Is the repair complete?	–	System OK	–
3	1. Turn the ignition ON. 2. Turn the wiper switch to INT. 3. Check the voltage at the wiper relay connector terminal I. Does the voltmeter indicate a voltage equal to the specified value?	11-14 V	Go to *Step 7*	Go to *Step 4*
4	Check for an open circuit between wiper switch connector terminal B2 (B3, if equiped cruise control system) and wiper relay connector terminal I. Is there an open circuit?	–	Go to *Step 6*	Go to *Step 5*
5	Replace the wiper switch. Is the repair complete?	–	System OK	–
6	Repair the open circuit between wiper switch connector terminal B2 (B3, if equiped cruise control system) and wiper relay connector terminal I. Is the repair complete?	–	System OK	–
7	1. Turn the ignition ON. 2. Turn the wiper switch to INT. 3. Check the voltage pulsing at the wiper relay connector terminal 53e. Does the voltmeter indicate a pulsating voltage equal to the specified value?	11-14 V	Go to *Step 11*	Go to *Step 8*
8	Using an ohmmeter, check the resistance between ground and the wiper relay connector terminal 31. Is resistance equal to the specified value?	0 Ω	Go to *Step 10*	Go to *Step 9*
9	Repair the open ground circuit. Is the repair complete?	–	System OK	–
10	Replace the wiper relay. Is the repair complete?	–	System OK	–
11	1. Turn the ignition ON. 2. Check the voltage at the wiper switch connector terminal A6. Is the voltage pulsating at the specified value?	–	Go to *Step 12*	Go to *Step 13*
12	Replace the wiper switch. Is the repair complete?	–	System OK	–
13	Repair the open circuit between the wiper switch and the wiper relay. Is the repair complete?	–	System OK	–

Windshield Wipers Do Not Return To Park Position

Step	Action	Value	Yes	No
1	1. Turn the ignition ON. 2. Check the voltage at the wiper motor connector terminal 2. Is the voltage equal to the specified value?	11-14 V	Go to *Step 3*	Go to *Step 2*
2	Repair the open circuit between the wiper motor and fuse F12. Is the repair complete?	–	System OK	–
3	1. Turn the wiper switch to HI. 2. While turning the wiper switch OFF, check the voltage at the wiper motor connector terminal 3. Is the specified voltage indicated when the wiper switch is turned OFF?	11-14 V	Go to *Step 5*	Go to *Step 4*
4	Replace the wiper motor. Is the repair complete?	–	System OK	–
5	1. Disconnect the wiper relay. 2. Check continuity between the wiper relay terminal 31b and 53e. Does the ohmmeter indicate the specified value?	0 Ω	Go to *Step 6*	Go to *Step 7*
6	Repair the open circuit between the wiper motor and the wiper relay. Is the repair complete?	–	System OK	–
7	Replace the wiper relay. Is the repair complete?	–	System OK	–

WINDSHIELD WASHER SYSTEM

Windshield Washer Inoperative, Wipers Work OK

Step	Action	Value	Yes	No
1	Activate the windshield washer switch. Do the windshield wipers operate when the washer switch is activated?	–	Go to *Step 4*	Go to *Step 2*
2	1. Turn the ignition ON. 2. While activating the washer switch, test the voltage at the windshield wiper switch connector terminal A4. Is the voltage equal to the specified value?	11-14 V	Go to *Step 8*	Go to *Step 3*
3	Replace the wiper switch. Is the repair complete?	–	System OK	–
4	Check the windshield washer fluid reservoir. Is there washer fluid in the fluid reservoir?	–	Go to *Step 6*	Go to *Step 5*
5	Fill the windshield washer fluid reservoir. Is the repair complete?	–	System OK	–
6	Check the windshield washer hoses and the nozzles. Are the windshield washer hoses and the nozzles clogged or damaged?	–	Go to *Step 7*	Go to *Step 8*
7	Repair the washer hoses and the nozzles. Is the repair complete?	–	System OK	–
8	1. Turn the ignition ON. 2. With the windshield washer activated, test the voltage at the windshield washer pump. Is the voltage equal to the specified value?	11-14 V	Go to *Step 10*	Go to *Step 9*
9	Repair an open circuit between the windshield washer pump and the windshield wiper switch. Is the repair complete?	–	System OK	–
10	Use an ohmmeter to measure the resistance between ground and the windshield washer pump. Is the resistance equal to the specified value?	0 Ω	Go to *Step 12*	Go to *Step 11*
11	Repair the windshield washer pump ground circuit. Is the repair complete?	–	System OK	–
12	Replace the windshield washer pump. Is the repair complete?	–	System OK	–

MAINTENANCE AND REPAIR

ON-VEHICLE SERVICE

WINDSHIELD WIPER ARM

(Left–Hand Drive Shown, Right–Hand Drive Similar)

Removal Procedure

1. Open the hood.
2. Remove the nut from the wiper arm.
3. Pull the wiper arm off.

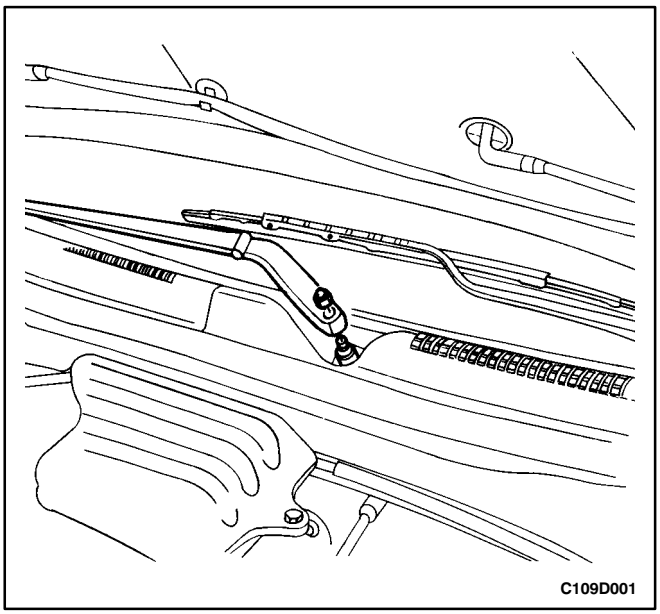

Installation Procedure

1. Install the wiper arm.

Notice: Dissimilar metals in direct contact with each other may corrode rapidly. Make sure to use the correct fasteners to prevent premature corrosion.

2. Secure the wiper arm with the nut.

   Tighten

   Tighten the wiper arm nut to 7 N•m (62 lb-in).

3. Close the hood.

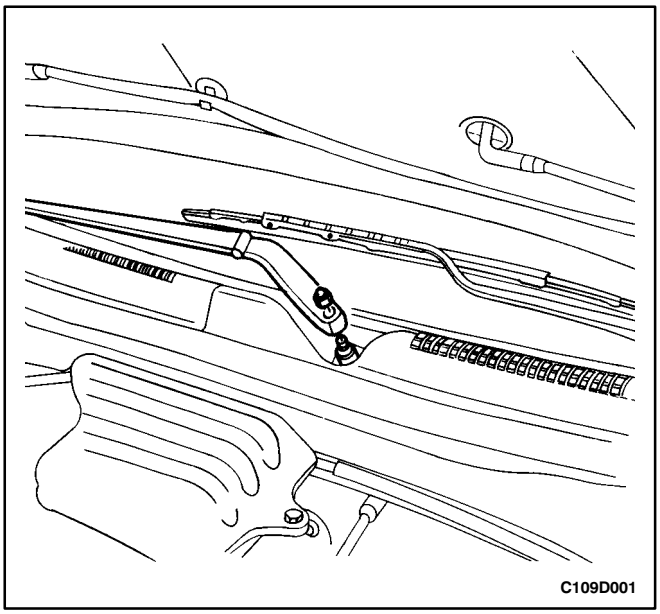

WINDSHIELD WIPER MOTOR

(Left–Hand Drive Shown, Right–Hand Drive Similar)

Removal Procedure

1. Disconnect the negative battery cable.
2. Remove the screws and the left side portion of the cowl vent grille.

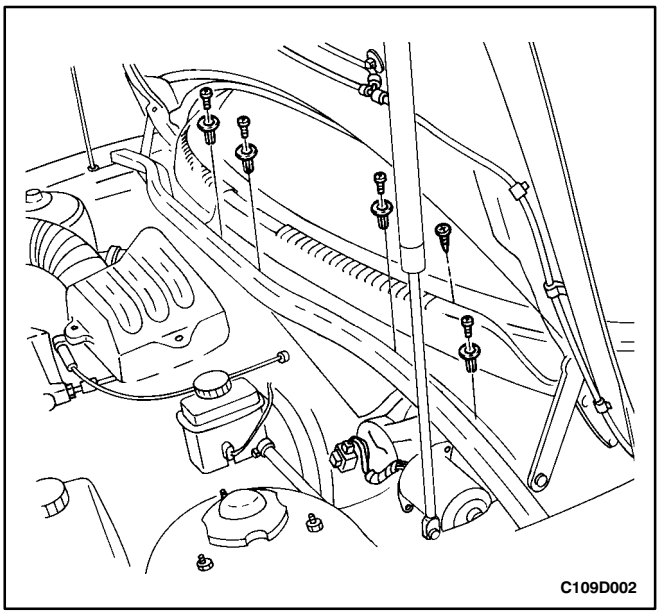

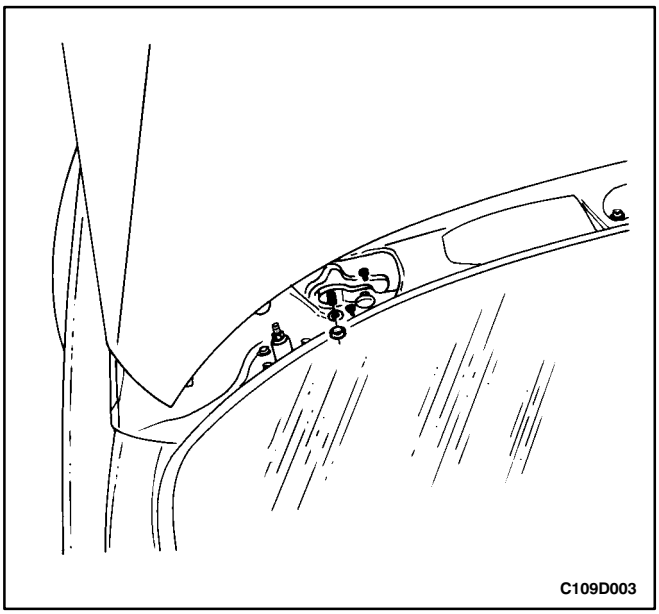

3. Remove the nut and the washer securing the wiper arm linkage to the motor drive shaft.

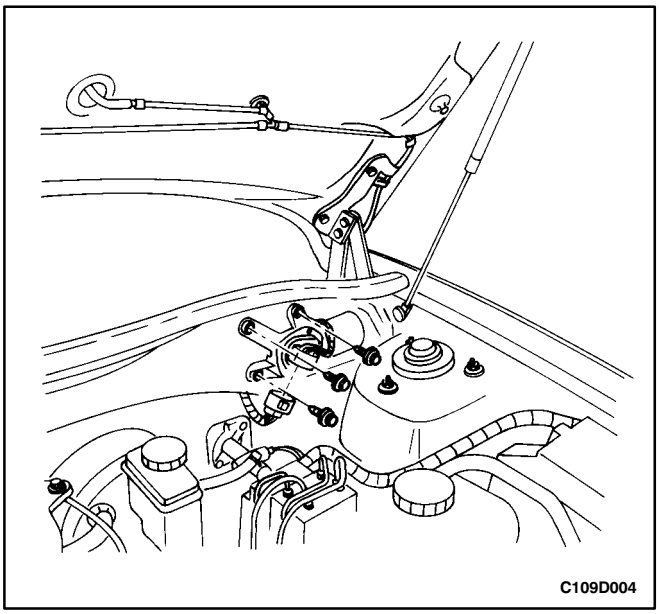

4. Pry the wiper arm linkage off the motor drive shaft.
5. Disconnect the electrical connector.
6. Remove the bolts and the wiper motor.

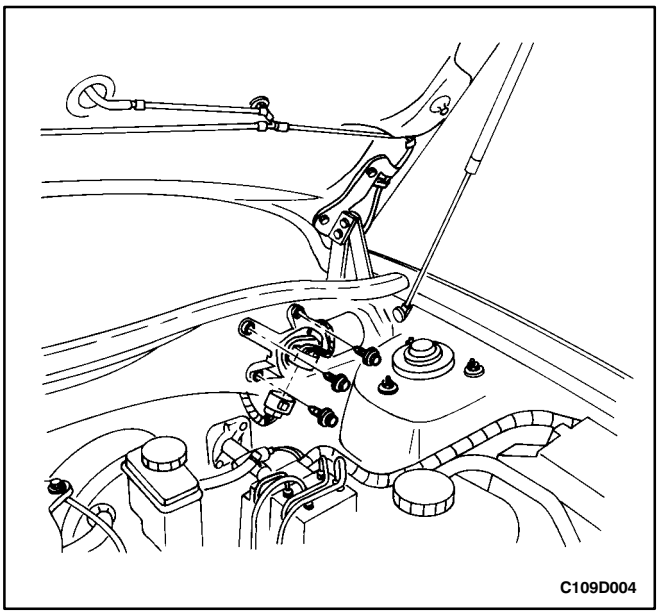

Installation Procedure

Notice: Dissimilar metals in direct contact with each other may corrode rapidly. Make sure to use the correct fasteners to prevent premature corrosion.

1. Install the wiper motor with the bolts.

   ### Tighten

   Tighten the wiper motor bolts to 4 N•m (36 lb-in).

2. Connect the electrical connector.

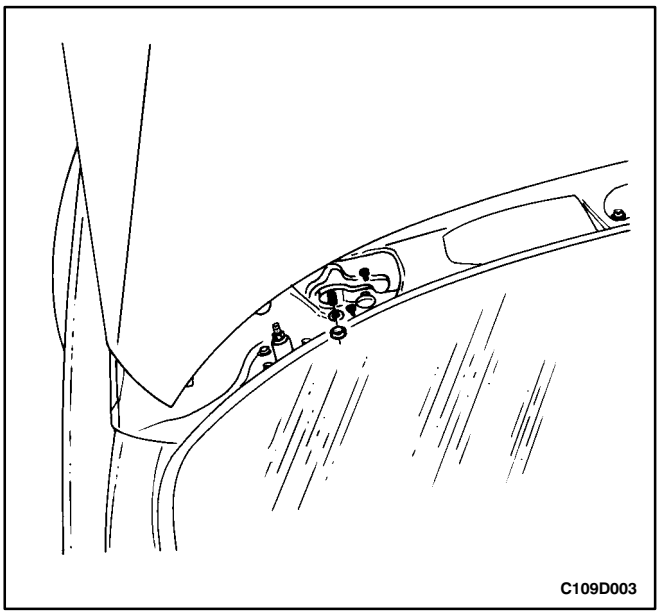

3. Press the wiper arm linkage onto the motor drive shaft.
4. Install the wiper arm linkage to the motor drive shaft with the washer and the nut.

Tighten

Tighten the wiper arm linkage nut to 16 N•m (12 lb-ft).

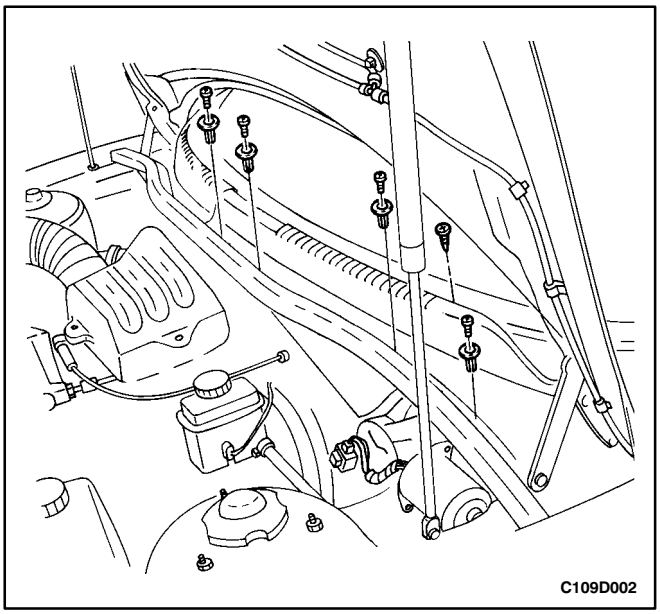

5. Install the left side portion of the cowl vent grille with the screws.

Tighten

Tighten the cowl vent grille screw to 2.5N•m (22 lb-in).

6. Connect the negative battery cable.

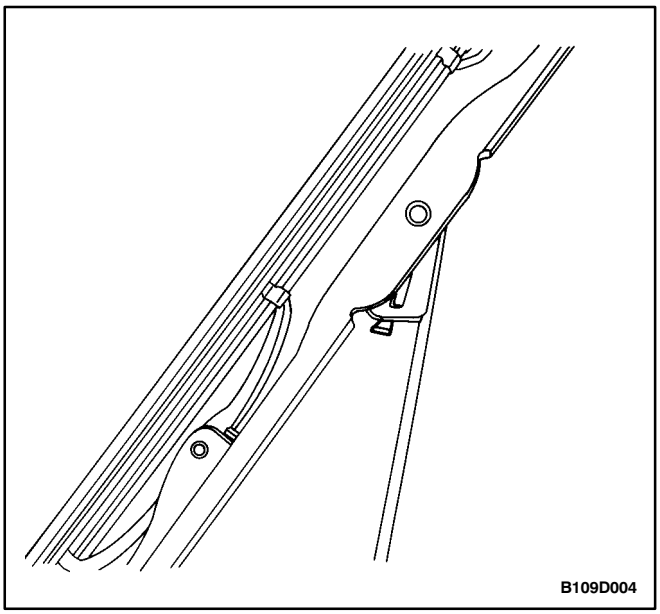

WINDSHIELD WIPER BLADE

Removal Procedure

1. Rotate the wiper blade on the arm.
2. While pressing the retainer clip, slide the wiper blade down the wiper arm and remove the blade.

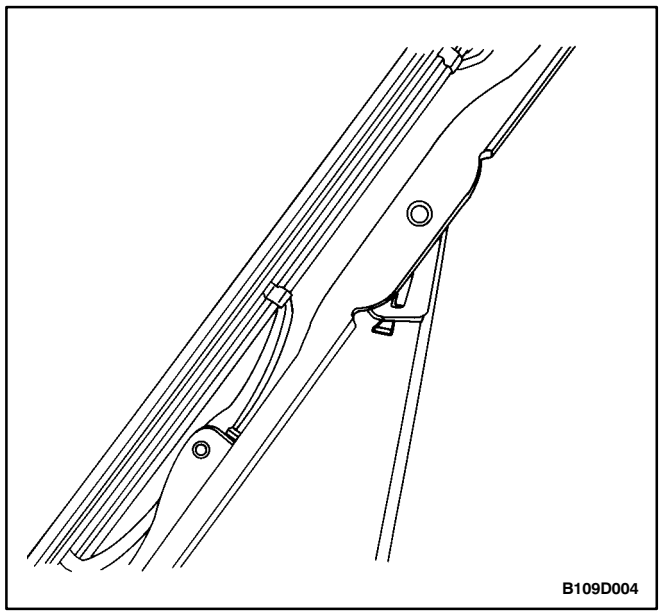

Installation Procedure

1. Install the wiper blade by sliding it onto the arm until the retainer clip engages.

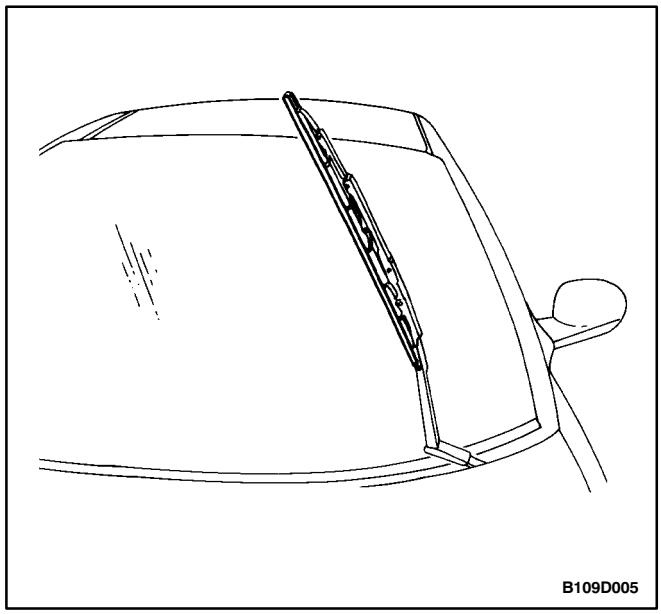

WINDSHIELD WIPER BLADE INSERT

Removal Procedure

1. Slide the insert out of the wiper blade.

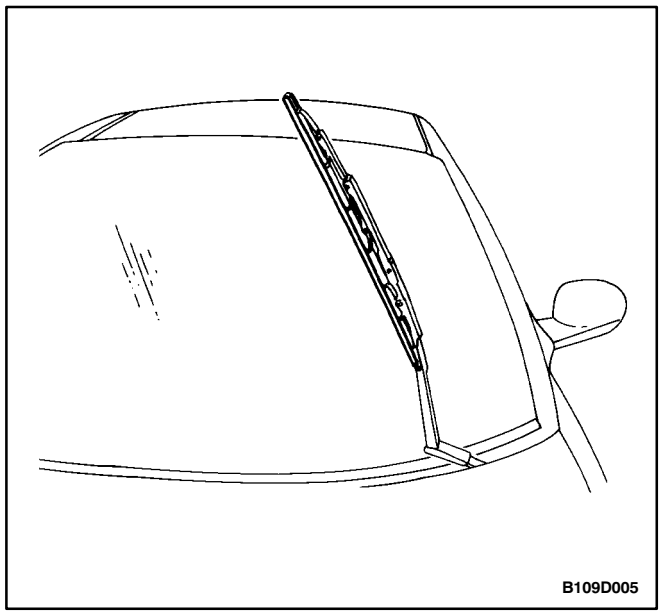

Installation Procedure

1. Slide the insert into the wiper blade.

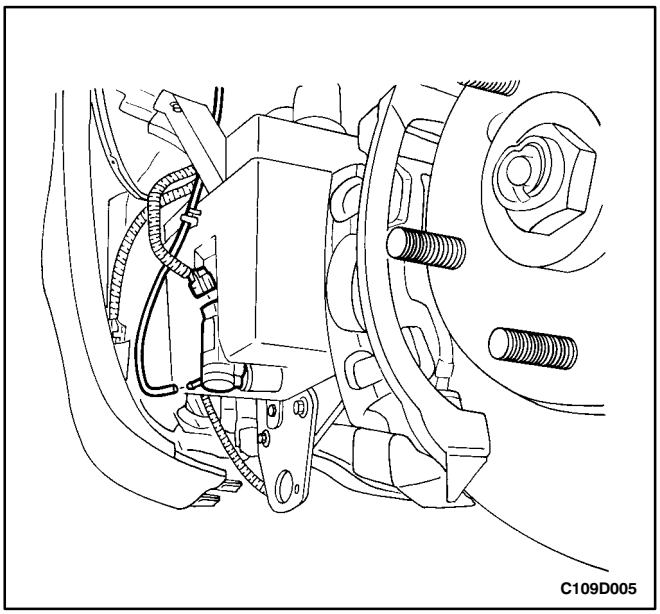

WINDSHIELD WASHER RESERVOIR

Removal Procedure

1. Disconnect the negative battery cable.
2. Remove the front left wheel. Refer to *Section 2E, Tires and Wheels*.
3. Remove the front wheel well splash shield. Refer to *Section 9R, Body Front End*.
4. Disconnect the washer hose from the washer pump.
5. Disconnect the reservoir pump electrical connector.

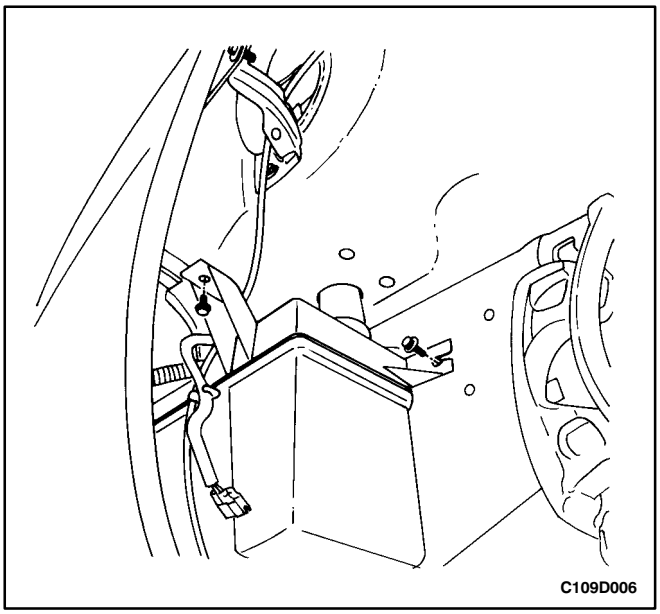

6. Remove the bolts and the reservoir.

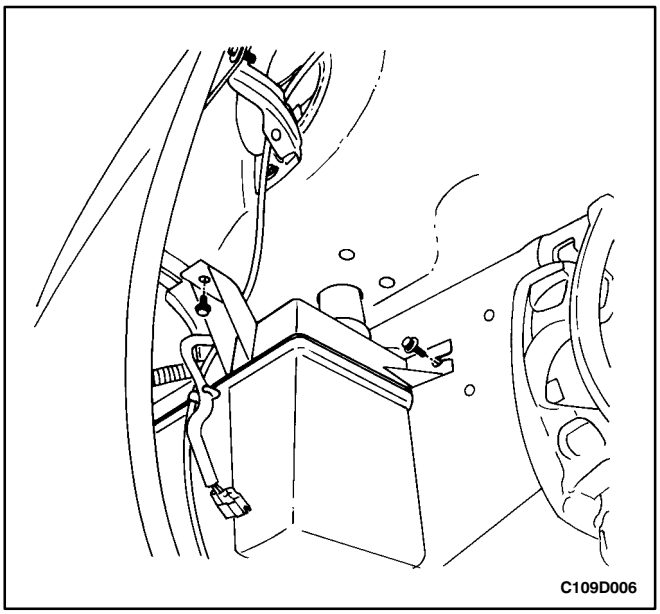

Installation Procedure

Notice: Dissimilar metals in direct contact with each other may corrode rapidly. Make sure to use the correct fasteners to prevent premature corrosion.

1. Install the reservoir with the bolts.

Tighten

Tighten the washer fluid reservoir bolts to 9 N•m (80 lb-in).

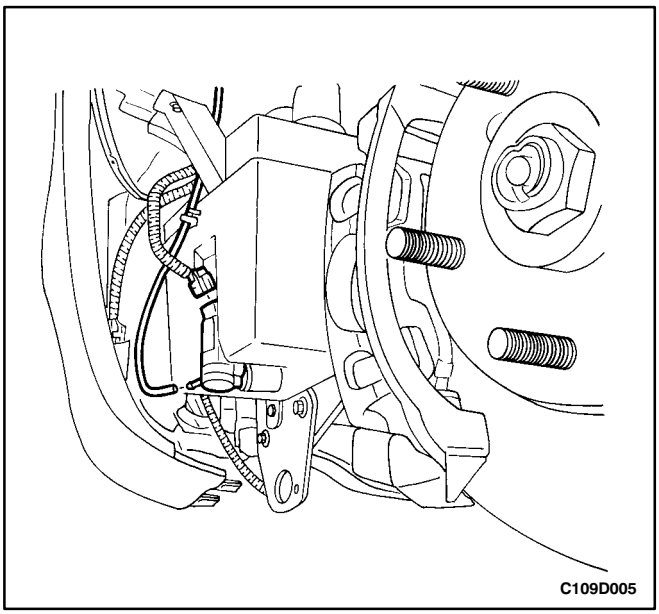

2. Connect the reservoir pump electrical connector.
3. Connect the washer hose to the washer pump.
4. Install the front wheel well splash shield. Refer to *Section 9R, Body Front End*.
5. Install the front left wheel. Refer to *Section 2E, Tires and Wheels.*
6. Connect the negative battery cable.

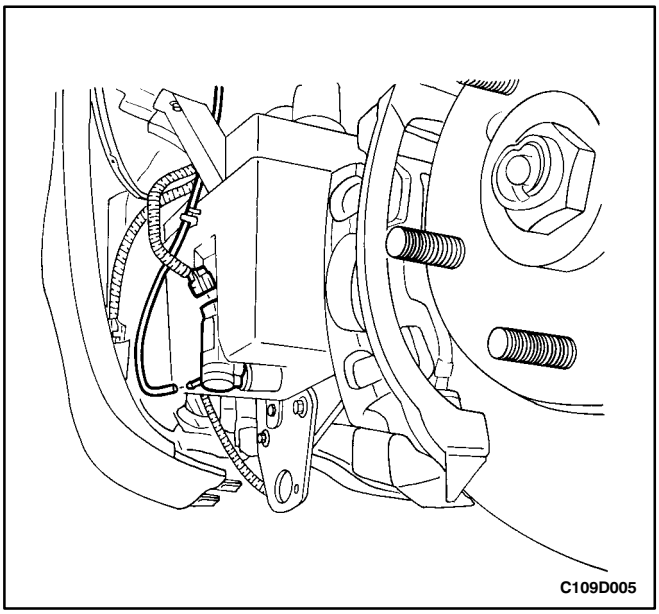

WINDSHIELD WASHER PUMP

Removal Procedure

1. Disconnect the negative battery cable.
2. Remove the left front left wheel. Refer to *Section 2E, Tires and Wheels*.
3. Remove the front wheel well splash shield. Refer to *Section 9R, Body Front End*.
4. Disconnect the electrical connector.
5. Disconnect the washer hose from the washer pump.
6. Remove the washer pump.

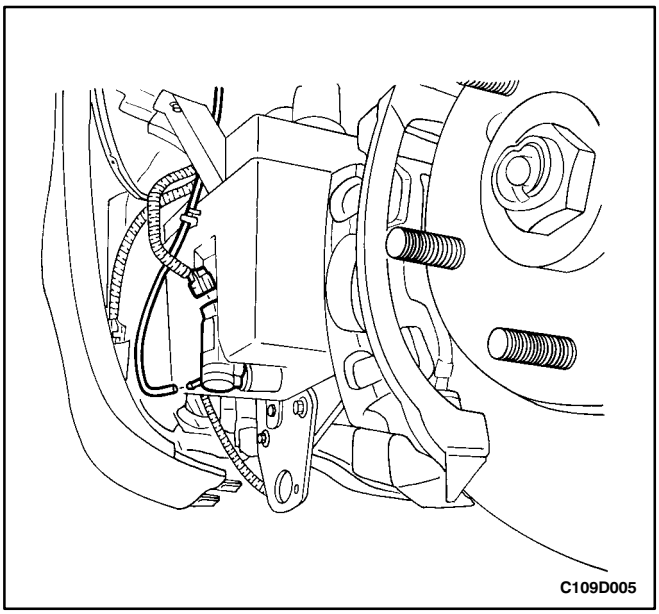

Installation Procedure

1. Install the washer pump.
2. Connect the washer hose to the washer pump.
3. Connect the electrical connector.
4. Install the front wheel well splash shield. Refer to *Section 9R, Body Front End*.
5. Install the left front wheel. Refer to *Section 2E, Tires and Wheels*.
6. Connect the negative battery cable.

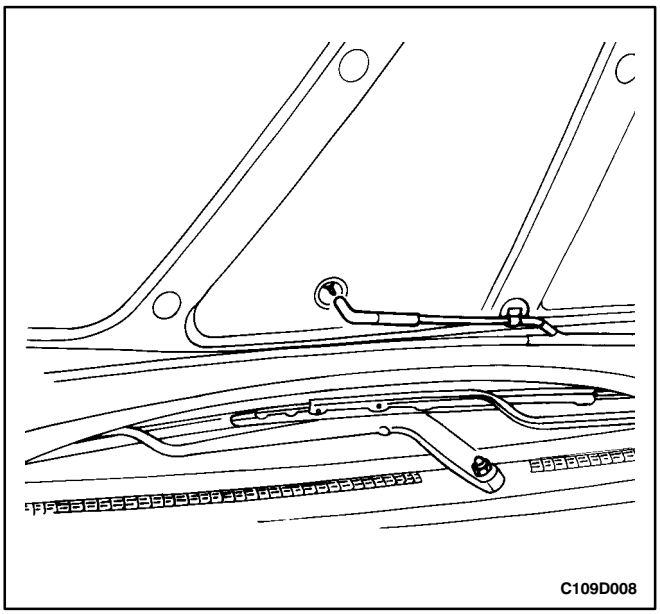

WINDSHIELD WASHER NOZZLES

Removal Procedure

1. Open the hood.
2. Disconnect the washer hose from the nozzle.
3. Remove the nozzle from the hood.

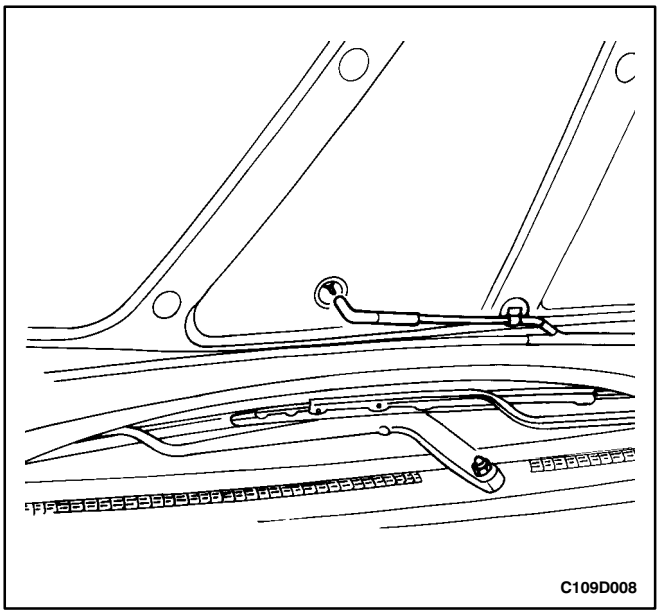

Installation Procedure

1. Install the nozzle onto the hood.
2. Connect the washer hose to the nozzle.
3. Close the hood.

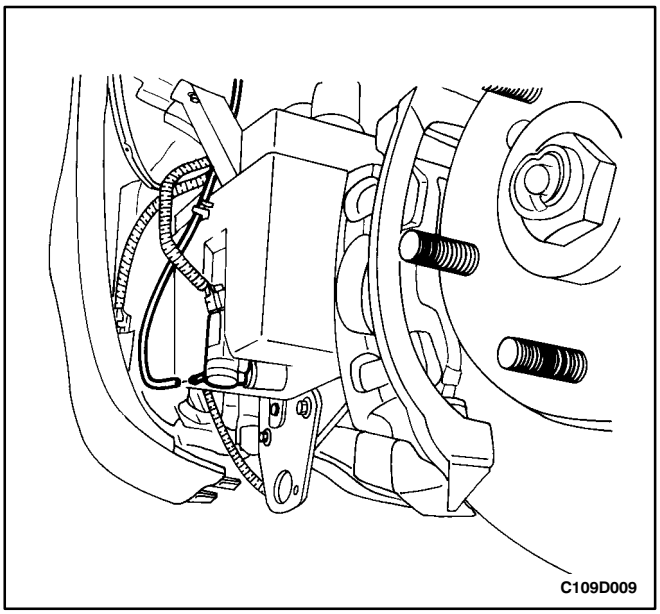

WINDSHIELD WASHER HOSES

Removal Procedure

1. Open the hood.
2. Disconnect the windshield washer hose from the washer nozzles on the hood.
3. Remove the front left wheel. Refer to *Section 2E, Tires and Wheels*.
4. Remove the front wheel well splash shield. Refer to *Section 9R, Body Front End*.
5. Disconnect the washer hose from the washer reservoir.
6. Remove the washer hose.

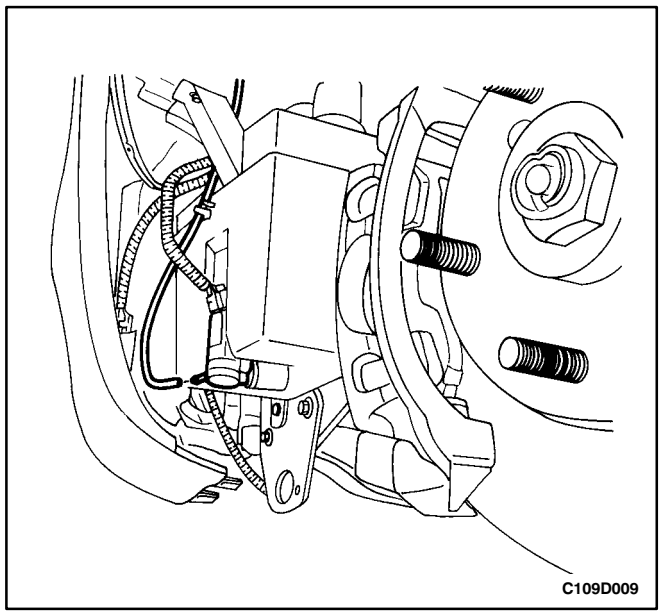

Installation Procedure

1. Connect the washer hose to the washer pump.
2. Install the front wheel well splash shield. Refer to *Section 9R, Body Front End.*
3. Install the front left wheel. Refer to *Section 2E, Tires and Wheels*.
4. Connect the windshield washer hose to the washer nozzles on the hood.
5. Close the hood.

GENERAL DESCRIPTION AND SYSTEM OPERATION

WINDSHIELD WIPER SYSTEM

The windshield wiper system consists of a wiper motor, a linkage, a wiper arm and a blade, and a wiper/washer switch. The windshield wiper circuit incorporates a self-parking device which consists of a worm gear and a cam plate in order to keep the circuit engaged temporarily when the switch is turned off. The wiper system is driven by a permanent magnet-type motor. The windshield wiper motor is mounted on the dash panel and is directly connected to the windshield wiper linkage.

The windshield wiper motor has two speeds, LO and HI, and also has intermittent wiper capability. The wiper switch is an integral part of the wiper/washer switch. Windshield wiper operation is actuated through the lever on the right side of the steering column.

WINDSHIELD WASHER SYSTEM

The windshield washer system is equipped with a washer fluid reservoir, a washer fluid pump, hoses, nozzles, and a wiper/washer switch. The windshield washer reservoir is mounted behind the front left wheel well splash shield. Attached to the reservoir is a washer pump, which pumps fluid through the hoses to the two nozzles mounted on the hood. The washer switch is an integral part of the wiper/washer switch. Windshield washer operation is actuated through the lever on the right side of the steering column.

SECTION 9E

INSTRUMENTATION/DRIVER INFORMATION

CAUTION: Disconnect the negative battery cable before removing or installing any electrical unit or when a tool or equipment could easily come in contact with exposed electrical terminals. Disconnecting this cable will help prevent personal injury and damage to the Vehicle. The ignition must also be in LOCK unless otherwise noted.

TABLE OF CONTENTS

Specifications 9E-2
Fastener Tightening Specifications 9E-2
Instrument Cluster Indicator Lamps Specifications 9E-3
Diagnosis 9E-4
Cigar Lighter 9E-5
Digital Clock 9E-7
Instrument Panel Illumination 9E-9
Speedometer 9E-13
Fuel Gauge 9E-15
Temperature Gauge 9E-17
Instrument Cluster Indicator Lamps 9E-21
Chime Module 9E-23
Maintenance and Repair 9E-28
On-Vehicle Service 9E-28
Cigar Lighter 9E-28
Ashtray 9E-29
Instrument Panel Vents 9E-30
Glove Box 9E-30
Digital Clock 9E-31
Instrument Cluster 9E-32
Instrument Cluster Dimmer/ Headlamp Leveling Switch 9E-32
Speedometer/Odometer/Trip Odometer 9E-33
Tachometer 9E-34
Fuel Gauge 9E-36
Temperature Gauge 9E-37
Instrument Cluster Indicator Lamps 9E-38
Chime Module 9E-39
Instrument Cluster Trim Panel 9E-40
Instrument Panel 9E-41
General Description and System Operation 9E-48
Cigar Lighter 9E-48
Ashtray 9E-48
Instrument Panel Vents 9E-48
Glove Box 9E-48
Digital Clock 9E-48
Instrument Cluster 9E-48
Speedometer 9E-48
Trip Odometer 9E-48
Fuel Gauge 9E-48
Temperature Gauge 9E-48
Instrument Cluster Indicator Lamps 9E-48
Tachometer 9E-48
Chime Module 9E-48

SPECIFICATIONS

FASTENER TIGHTENING SPECIFICATIONS

Application	N•m	Lb-Ft	Lb-In
Ashtray Housing Screws	2.5	–	22
Chime Module Screws	4	–	35
Cluster Illumination Connector Screws	2	–	18
Digital Clock Screws	3		27
Fuel Gauge Screws	2	–	18
Glove Box Brace Bolts	10	–	89
Glove Box Housing Screws	2.5	–	22
Glove Box Screws	2.5	–	22
Hood Release Handle Screw	2.5	–	22
Instrument Cluster Screws	3	–	27
Instrument Cluster Trim Panel Screws	3	–	27
Instrument Panel Bolts Below the Windshield	22	16	–
Instrument Panel Screw Behind the Audio System	3	–	27
Instrument Panel Screw Behind the Glove Box Brace	2.5	–	22
Instrument Panel Side Trim Cover Screws	2.5	–	22
Instrument Panel Storage Compartment Screws	2.5	–	22
Instrument Panel Vent Screws	3	–	27
Instrument Panel-to-Body Bolts	22	16	–
Instrument Panel-to-Floor Bolts	22	16	–
Instrument Panel-to-Heater Air Distributor Case Screw	4	–	35
Passenger Side Knob Bolster Trim Panel Screws	3	–	27
Speedometer/Odometer Screws	2	–	18
Steering Column Bolts	22	16	–
Steering Column Nuts	22	16	–
Tachometer Screws	2	–	18
Temperature Gauge Screws	2	–	18

INSTRUMENT CLUSTER INDICATOR LAMPS SPECIFICATIONS

Indicator Lamp	Color	Bulb
ABS Warning	Amber	14 V 1.4 W
Airbag Warning	Red	14 V 1.4 W
Automatic Transaxle Shift Position Indicators		
Park	Green	14 V 1.4 W
Reverse	Red	14 V 1.4 W
Neutral	Green	14 V 1.4 W
Drive	Green	14 V 1.4 W
3	Green	14 V 1.4 W
2	Green	14 V 1.4 W
1	Green	14 V 1.4 W
Battery Charge Indicator	Red	14 V 1.4 W
Check Engine Warning	Amber	14 V 1.4 W
Cruise Control Indicator	Green	14 V 1.4 W
Door Open Warning	Red	14 V 1.4 W
Fasten Seat Belt Warning	Red	14 V 1.4 W
Front Fog Lamp Indicator	Green	14 V 1.4 W
High Beam Indicator	Blue	14 V 1.4 W
Low Fuel Level Warning	Amber	14 V 3 W
Luggage Compartment Open Warning	Amber	14 V 1.4 W
Oil Pressure Warning	Red	14 V 1.4 W
Parking Brake Indicator and Brake Fluid Warning	Red	14 V 1.4 W
Rear Fog Lamp Indicator	Amber	14 V 1.4 W
Service Engine Soon Warning	Amber	14 V 1.4 W
Traction Control System Warning	Amber	14 V 1.4 W
Transaxle Power Mode Indicator	Amber	14 V 1.4 W
Turn Signal Indicators	Green	14 V 1.4 W

DIAGNOSIS

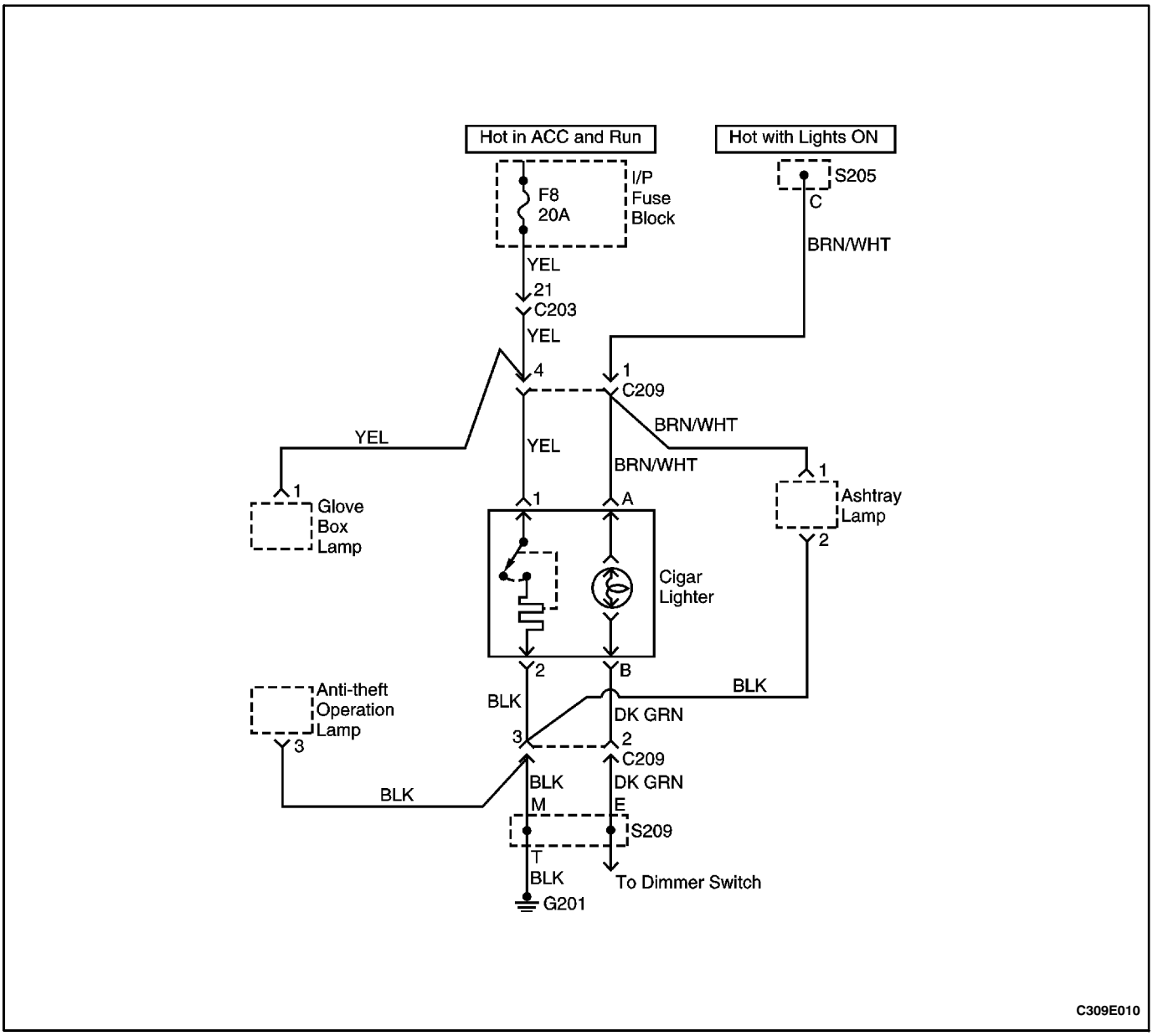
Hot in ACC and Run
Hot with Lights ON
F8
20A
I/P
Fuse
Block
S205
C
BRN/WHT
YEL
21
C203
YEL
4
1
C209
BRN/WHT
YEL
YEL
BRN/WHT
1
Glove
Box
Lamp
1
A
1
Ashtray
Lamp
2
Cigar
Lighter
2
B
BLK
Anti-theft
Operation
Lamp
3
BLK
DK GRN
3
2
C209
BLK
BLK
DK GRN
M
E
S209
T
BLK
To Dimmer Switch
G201
C309E010

CIGAR LIGHTER

Cigar Lighter Inoperative

Step	Action	Value(s)	Yes	No
1	Check fuse F8. Is the fuse blown?	–	Go to *Step 2*	Go to *Step 3*
2	1. Check for a short circuit and repair if necessary. 2. Replace the fuse. Is the repair complete?	–	System OK	–
3	1. Turn the ignition key to the ACC position. 2. Use a Voltmeter to check for Voltage at fuse F8. Does the battery Voltage available at the fuse F8 match the Value specified?	11-14 V	Go to *Step 5*	Go to *Step 4*
4	Repair the open power-supply circuit for fuse F8. Is the repair complete?	–	System OK	–
5	1. Remove the electrical connector from the back of the cigar lighter. 2. Turn the ignition key to the ACC position. 3. Use a Voltmeter to check the Voltage at the YEL wire. Does the battery Voltage available at the YEL wire match the Value specified?	11-14 V	Go to *Step 7*	Go to *Step 6*
6	Repair the open circuit between the fuse F8 and the cigar lighter. Is the repair complete?	–	System OK	–
7	With the ignition key still in the ACC position, connect the Voltmeter between the YEL and the BLK wires at the cigar lighter connector. Does the battery Voltage match the Value specified?	11-14 V	Go to *Step 9*	Go to *Step 8*
8	Repair the open ground circuit. Is the repair complete?	–	System OK	–
9	Replace the cigar lighter. Is the repair complete?	–	System OK	–

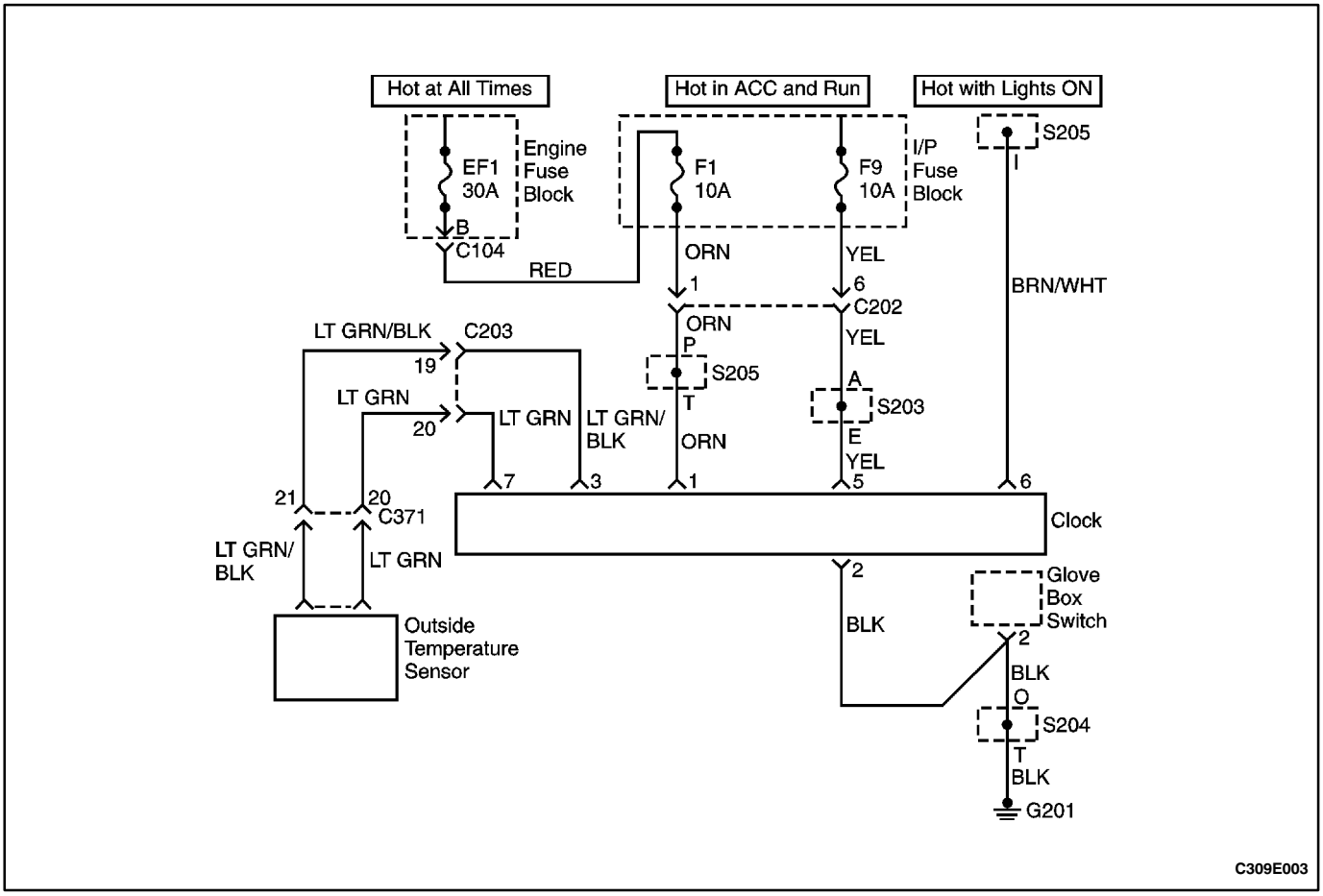
Hot at All Times
Hot in ACC and Run
Hot with Lights ON
EF1
30A
Engine
Fuse
Block
B
C104
RED
F1
10A
F9
10A
I/P
Fuse
Block
S205
I
ORN
1
YEL
6
C202
BRN/WHT
LT GRN/BLK
C203
19
ORN
P
S205
T
YEL
A
S203
E
YEL
LT GRN
20
LT GRN
LT GRN/
BLK
ORN
7
3
1
5
6
21
20
C371
Clock
LT GRN/
BLK
LT GRN
2
Glove
Box
Switch
BLK
2
Outside
Temperature
Sensor
BLK
O
S204
T
BLK
G201
C309E003

DIGITAL CLOCK

Digital Clock Inoperative

Step	Action	Value(s)	Yes	No
1	Is either of the fuses F1 or F9 blown?	–	Go to *Step 2*	Go to *Step 3*
2	1. Check for a short circuit and repair if necessary. 2. Replace the blown fuses. Is the repair complete?	–	System OK	–
3	1. Turn the ignition ON. 2. Use a Voltmeter to check battery Voltage available at fuses F1 and F9. Does the Voltmeter indicate the Value specified?	11-14 V	Go to *Step 5*	Go to *Step 4*
4	Repair the open power supply circuit for the fuse. Is the repair complete?	–	System OK	–
5	1. Turn the ignition ON. 2. Use a Voltmeter to check the battery Voltage available at the clock connector terminal 5. Does the Voltmeter indicate the Value specified?	11-14 V	Go to *Step 7*	Go to *Step 6*
6	Repair the open circuit between the clock connector terminal 5 and the fuse F9. Is the repair complete?	–	System OK	–
7	Turn the ignition ON. Is battery Voltage available at the clock connector terminal 1?	–	Go to *Step 9*	Go to *Step 8*
8	Repair the open circuit between the clock connector terminal 1 and the fuse F1. Is the repair complete?	–	System OK	–
9	Check continuity between the clock connector terminal 2 and ground. Does the multimeter indicate the Value specified?	≈ 0 Ω	Go to *Step 10*	Go to *Step 11*
10	Replace the clock. Is the repair complete?	–	System OK	–
11	Repair the open ground circuit between the clock connector terminal 2 and the ground G201. Is the repair complete?	–	System OK	–

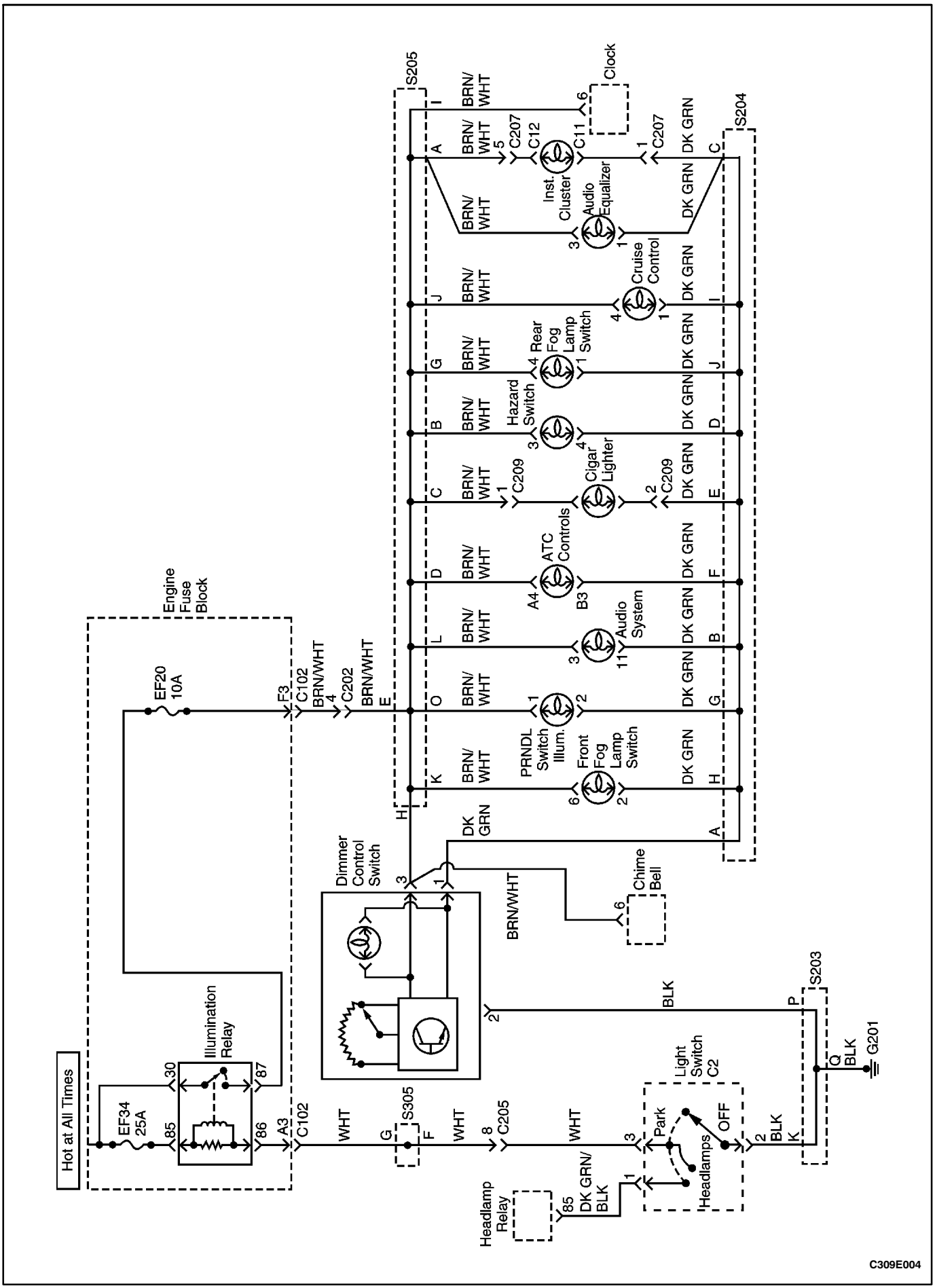
Hot at All Times
EF34
25A
Illumination
Relay
Engine
Fuse
Block
EF20
10A
Dimmer
Control
Switch
Headlamp
Relay
Light
Switch
C2
Park
Headlamps
OFF
Inst.
Cluster
Audio
Equalizer
Cruise
Control
Rear
Fog
Lamp
Switch
Hazard
Switch
Cigar
Lighter
ATC
Controls
Audio
System
PRNDL
Switch
Illum.
Front
Fog
Lamp
Switch
Clock
Chime
Bell
S205
S204
S203
S305
G201
C309E004

INSTRUMENT PANEL ILLUMINATION

Instrument Panel Does Not Illuminate When Lights Are ON

Step	Action	Value(s)	Yes	No
1	Check the operation of the headlamps and parking lamps. Do the headlamps and parking lamps work on both sides of the Vehicle?	–	Go to *Step 3*	Go to *Step 2*
2	Repair the headlamps and parking lamps before continuing with this diagnostic table. Does the instrument panel illumination turn ON after the headlamps and parking lamps have been repaired?	–	System OK	Go to *Step 3*
3	1. Disconnect the electrical connector at the dimmer control switch. 2. Turn the parking lamps ON. 3. Use a Voltmeter to check the Voltage at the dimmer control switch terminal 3. Does the Voltmeter indicate the specified Value?	11-14 V	Go to *Step 5*	Go to *Step 4*
4	Repair the open circuit between fuse EF20 and the dimmer control switch. Is the repair complete?	–	System OK	–
5	1. Turn the lights OFF. 2. At the disconnected dimmer control switch, use an ohmmeter to check the resistance between ground and terminal 2 of the dimmer switch connector. Does the ohmmeter indicate the specified Value?	≈ 0 Ω	Go to *Step 7*	Go to *Step 6*
6	Repair the open circuit between ground and terminal 2 of the dimmer control switch connector. Is the repair complete?	–	System OK	–
7	1. Turn the parking lights ON. 2. At the disconnected dimmer control switch, check the Voltage at terminal 1 of the dimmer control switch. Is the Voltage equal to the specified Value?	11-14 V	Go to *Step 9*	Go to *Step 8*
8	Repair the open circuit between connector C202 and terminal 1 of the dimmer control switch. Is the repair complete?	–	System OK	–
9	Replace the dimmer control switch. Is the repair complete?	–	System OK	–

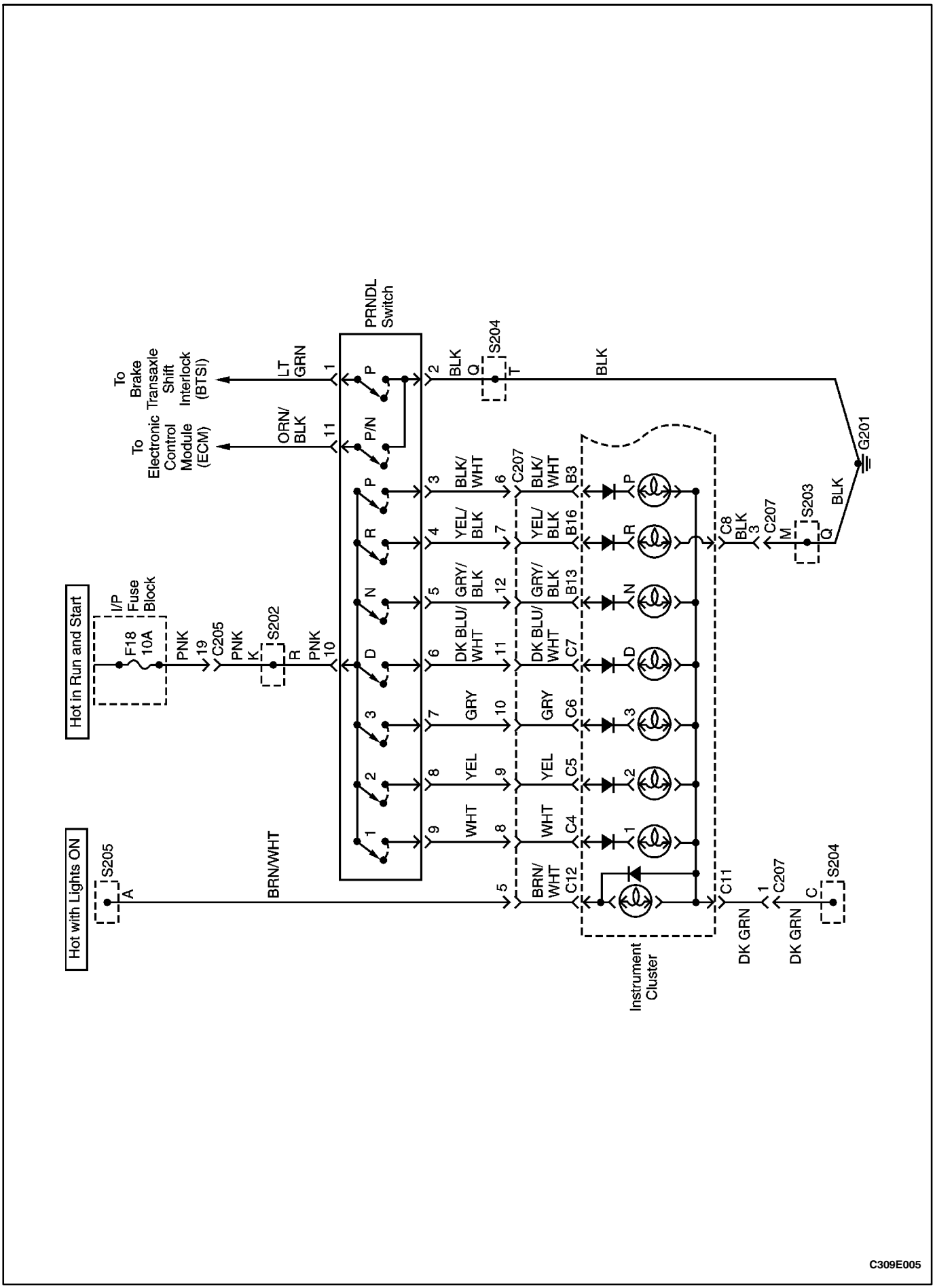
Hot in Run and Start
I/P Fuse Block
F18 10A
PNK 19
C205
PNK K
S202
R
PNK 10
Hot with Lights ON
S205
A
BRN/WHT
To Brake Transaxle Shift Interlock (BTSI)
LT GRN
To Electronic Control Module (ECM)
ORN/ BLK
PRNDL Switch
P
R
N
D
3
2
1
P/N
BLK Q
S204
T
BLK
G201
BLK/ WHT
YEL/ BLK
GRY/ BLK
DK BLU/ WHT
GRY
YEL
WHT
BRN/ WHT
C207
BLK/ WHT B3
YEL/ BLK B16
GRY/ BLK B13
DK BLU/ WHT C7
GRY C6
YEL C5
WHT C4
BRN/ WHT C12
C8 BLK 3
C207 M
S203
Q
BLK
C11
DK GRN
C207
DK GRN
C
S204
Instrument Cluster

C309E005

Automatic Transaxle Gear Position Illumination Lamp Inoperative, All Other Instrument Lamps OK

Step	Action	Value(s)	Yes	No
1	Is fuse F18 blown?	–	Go to *Step 2*	Go to *Step 3*
2	1. Check for a short circuit and repair if necessary. 2. Replace the blown fuse. Is the repair complete?	–	System OK	–
3	1. Turn the ignition switch ON. 2. Use a Voltmeter to check battery Voltage available at fuse F18. Does the battery Voltage match the Value specified?	11-14 V	Go to *Step 5*	Go to *Step 4*
4	Repair the open power supply circuit to fuse F18. Is the repair complete?	–	System OK	–
5	1. Turn the ignition switch ON. 2. Remove the automatic transaxle position lamp. 3. Use a Voltmeter to check battery Voltage available at the lamp socket. Does the battery Voltage match the Value specified?	11-14 V	Go to *Step 7*	Go to *Step 6*
6	Repair the open circuit between the automatic transaxle position lamp socket and fuse F18. Is the repair complete?	–	System OK	–
7	1. Remove the automatic transaxle position lamp. 2. Use an ohmmeter to check the resistance between the ground circuit and the lamp socket. Is the resistance equal to the Value specified?	≈0 Ω	Go to *Step 9*	Go to *Step 8*
8	Repair the open ground circuit between the automatic transaxle position lamp socket and ground G201. Is the repair complete?	–	System OK	–
9	Replace the automatic transaxle position lamp. Is the repair complete?	–	System OK	–

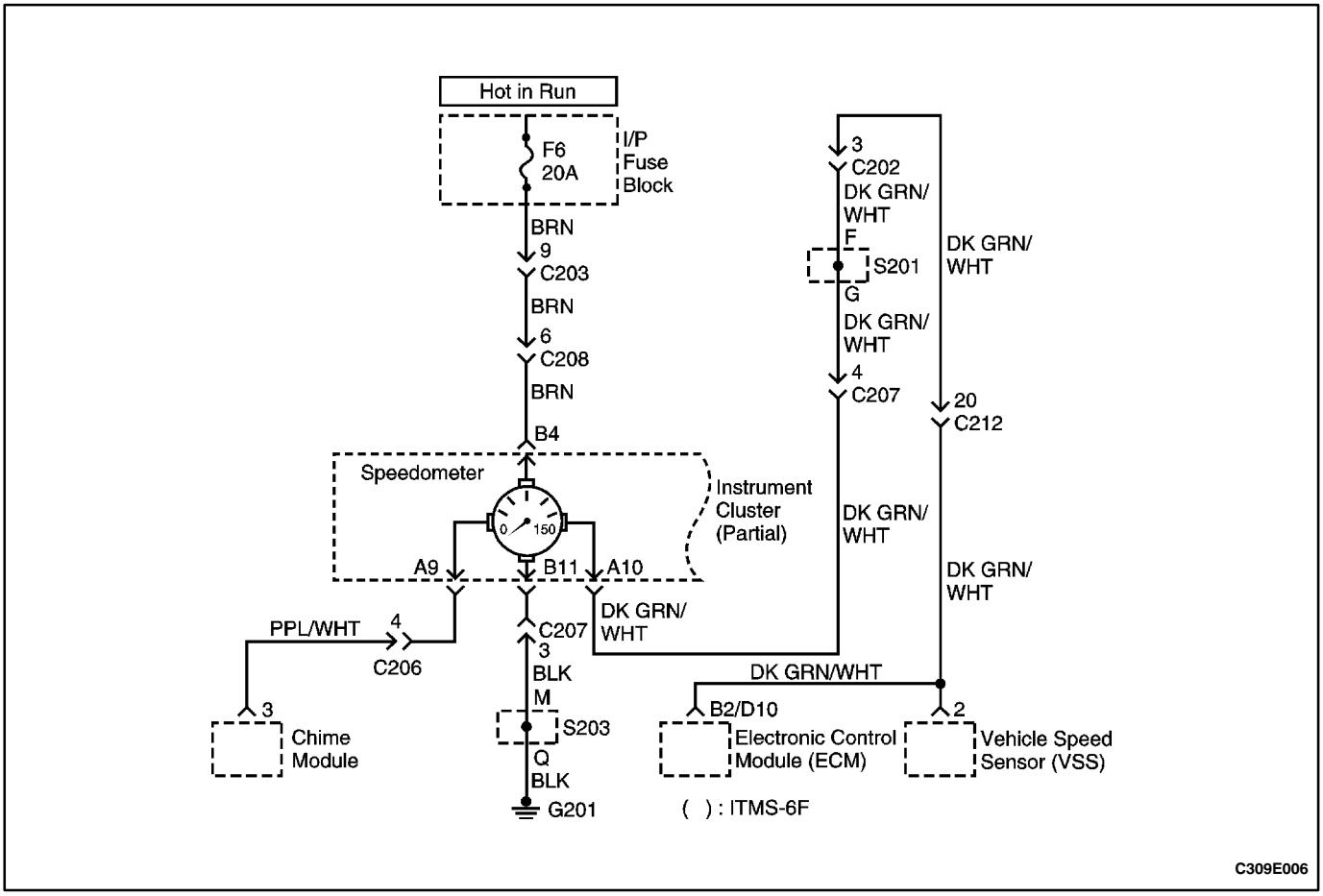
Hot in Run
F6
20A
I/P
Fuse
Block
BRN
9
C203
BRN
6
C208
BRN
B4
Speedometer
0
150
A9
B11
A10
Instrument
Cluster
(Partial)
PPL/WHT
4
C206
C207
3
BLK
M
S203
Q
BLK
G201
DK GRN/
WHT
3
Chime
Module
3
C202
DK GRN/
WHT
F
S201
G
DK GRN/
WHT
4
C207
DK GRN/
WHT
DK GRN/
WHT
20
C212
DK GRN/
WHT
DK GRN/WHT
B2/D10
Electronic Control
Module (ECM)
2
Vehicle Speed
Sensor (VSS)
( ) : ITMS-6F
C309E006

SPEEDOMETER

Speedometer Is Inoperative

Step	Action	Value(s)	Yes	No
1	Check fuse F6. Is fuse F6 blown?	–	Go to *Step 2*	Go to *Step 3*
2	1. Check for a short circuit and repair if necessary. 2. Replace fuse F6. Is the repair complete?	–	System OK	–
3	1. Turn the ignition ON. 2. Check the Voltage at fuse F6. Is the Voltage equal to the specified Value?	11-14 v	Go to *Step 5*	Go to *Step 4*
4	Repair the power supply for the ignition 2 relay. Is the repair complete?	–	System OK	–
5	1. Connect a scan tool. 2. Check for engine control diagnostic trouble codes (DTCs). Is a Vehicle speed sensor DTC set?	–	Go to *Section 2F, Engine Controls*	Go to *Step 6*
6	1. Remove the instrument cluster. 2. Turn the ignition ON. 3. Check the Voltage at instrument cluster connector terminal B4. Is the Voltage equal to the specified Value?	11-14 V	Go to *Step 8*	Go to *Step 7*
7	Repair the open circuit between fuse F6 and the instrument cluster. Is the repair complete?	–	System OK	–
8	Use an ohmmeter to check the resistance between ground and instrument cluster connector terminal B11. Does the ohmmeter indicate the specified Value?	≈ 0 Ω	Go to *Step 10*	Go to *Step 9*
9	Repair the open circuit between ground and instrument cluster connector terminal B11. Is the repair complete?	–	System OK	–
10	Use an ohmmeter to check continuity of the DK GRN/WHT wire between the Vehicle speed sensor terminal 2 and instrument cluster connector terminal A10. Does the ohmmeter indicate the specified Value?	≈ 0 Ω	Go to *Step 12*	Go to *Step 11*
11	Repair the open circuit between the Vehicle speed sensor and the instrument cluster. Is the repair complete?	–	System OK	–
12	Replace the speedometer. Is the repair complete?	–	System OK	–

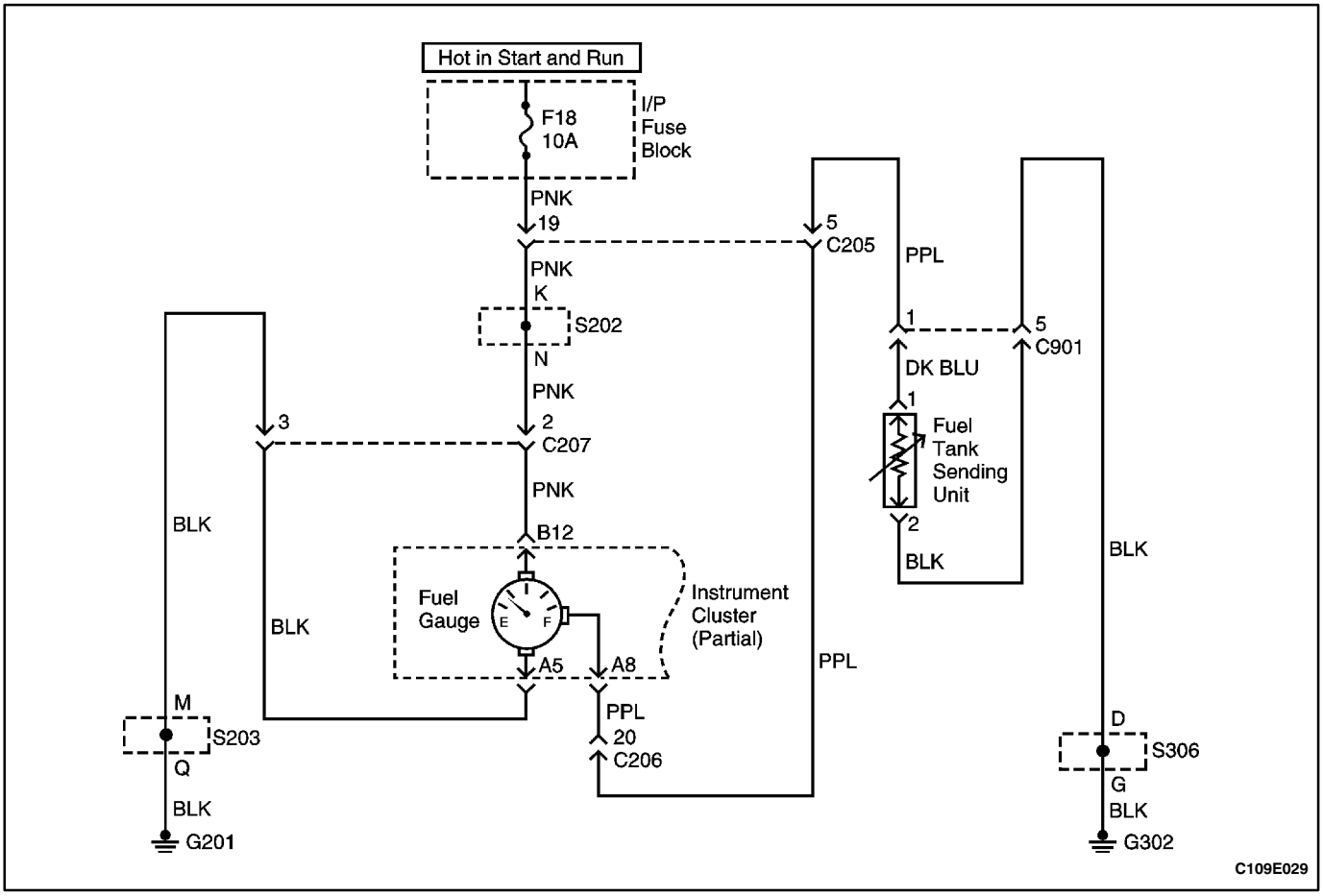
Hot in Start and Run
F18
10A
I/P
Fuse
Block
PNK
19
PNK
K
S202
N
PNK
2
C207
PNK
B12
5
C205
PPL
1
5
C901
DK BLU
1
Fuel
Tank
Sending
Unit
2
BLK
BLK
3
BLK
Fuel
Gauge
E
F
Instrument
Cluster
(Partial)
A5
A8
PPL
PPL
20
C206
M
S203
Q
BLK
G201
D
S306
G
BLK
G302
C109E029

FUEL GAUGE

Fuel Gauge Inoperative

Step	Action	Value(s)	Yes	No
1	Turn the ignition ON. Does the fuel gauge always indicate a full fuel tank with the ignition ON?	–	Go to *Step 2*	Go to *Step 7*
2	Disconnect the fuel tank sending unit. Does the fuel gauge change to empty?	–	Go to *Step 3*	Go to *Step 4*
3	Replace the fuel tank sending unit. Is the repair complete?	–	System OK	–
4	Check the wiring harness for a short to ground between the fuel tank sending unit and the fuel gauge. Is there a short to ground?	–	Go to *Step 5*	Go to *Step 6*
5	Repair the short to ground. Is the repair complete?	–	System OK	–
6	Replace the fuel gauge. Is the repair complete?	–	System OK	–
7	1. Disconnect the fuel tank sending unit electrical connector. 2. Turn the ignition ON. 3. Check the Voltage at the fuel tank sending unit connector C901 terminal 1. Does the Voltmeter indicate the specified Value?	11-14 V	Go to *Step 9*	Go to *Step 8*
8	Repair the open circuit between the fuel gauge and the fuel tank sending unit. Is the repair complete?	–	System OK	–
9	Check continuity between the fuel tank sending unit connector C901 terminal 5, and ground. Does the multimeter indicate the specified Value?	≈0 Ω	Go to *Step 11*	Go to *Step 10*
10	Repair the open circuit or poor ground connection. Is the repair complete?	–	System OK	–
11	1. With the fuel tank sending unit electrical connector C901 disconnected, attach a jumper between ground and C901 terminal 1. 2. Turn the ignition ON. Does the fuel gauge move to full?	–	Go to *Step 3*	Go to *Step 6*

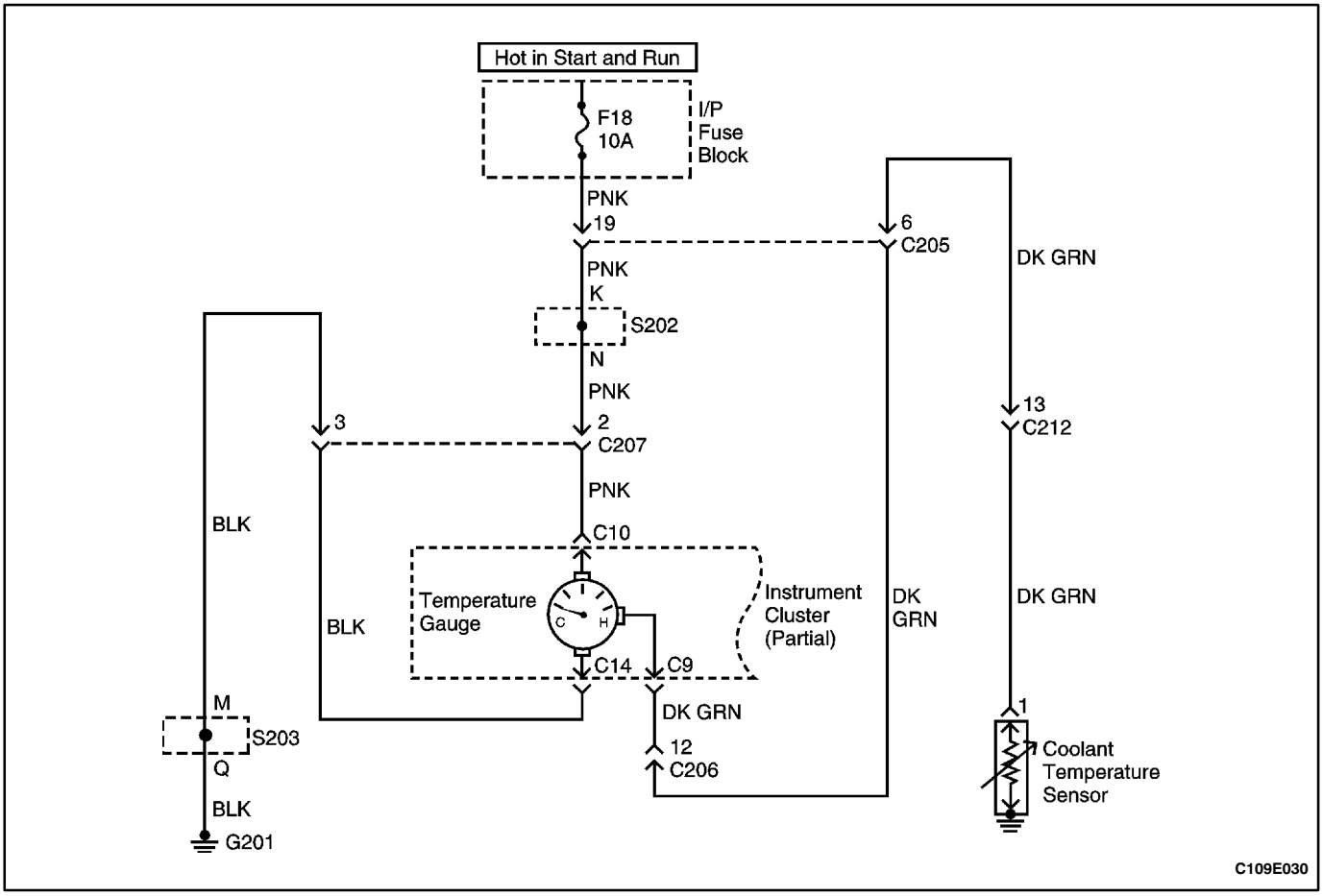
Hot in Start and Run
F18
10A
I/P
Fuse
Block
PNK
19
6
C205
DK GRN
PNK
K
S202
N
PNK
2
C207
3
13
C212
PNK
C10
BLK
Temperature
Gauge
C
H
Instrument
Cluster
(Partial)
DK
GRN
DK GRN
BLK
C14
C9
M
S203
Q
DK GRN
12
C206
1
Coolant
Temperature
Sensor
BLK
G201
C109E030

TEMPERATURE GAUGE

Temperature Gauge Inoperative, Other Gauges OK

Step	Action	Value(s)	Yes	No
1	Allow the engine to cool to room temperature. With the ignition ON, does the temperature gauge always read at the high end of the scale?	–	Go to *Step 7*	Go to *Step 2*
2	Disconnect the coolant temperature sensor electrical connector. Does the temperature gauge indicator drop to the low end of the scale?	–	Go to *Step 3*	Go to *Step 4*
3	Replace the coolant temperature sensor. Is the repair complete?	–	System OK	–
4	Check for a short to ground between the coolant temperature sensor and the temperature gauge. Is there a short to ground?	–	Go to *Step 5*	Go to *Step 6*
5	Repair the short to ground. Is the repair complete?	–	System OK	–
6	Replace the temperature gauge. Is the repair complete?	–	System OK	–
7	1. Disconnect the coolant temperature sensor. 2. Turn the ignition ON. 3. Check the Voltage at the coolant temperature sensor connector. Does the the Voltage equal the Value specified?	11-14 V	Go to *Step 10*	Go to *Step 8*
8	Check for an open circuit between the coolant temperature sensor and the temperature gauge. Is there an open circuit?	–	Go to *Step 9*	Go to *Step 6*
9	Repair the open circuit between the coolant temperature sensor and the temperature gauge. Is the repair complete?	–	System OK	–
10	1. Disconnect the coolant temperature sensor. 2. Connect a jumper wire between the coolant temperature sensor connector and ground. 3. Turn the ignition ON. Does the temperature gauge move to the high end of the scale?	–	Go to *Step 3*	Go to *Step 6*

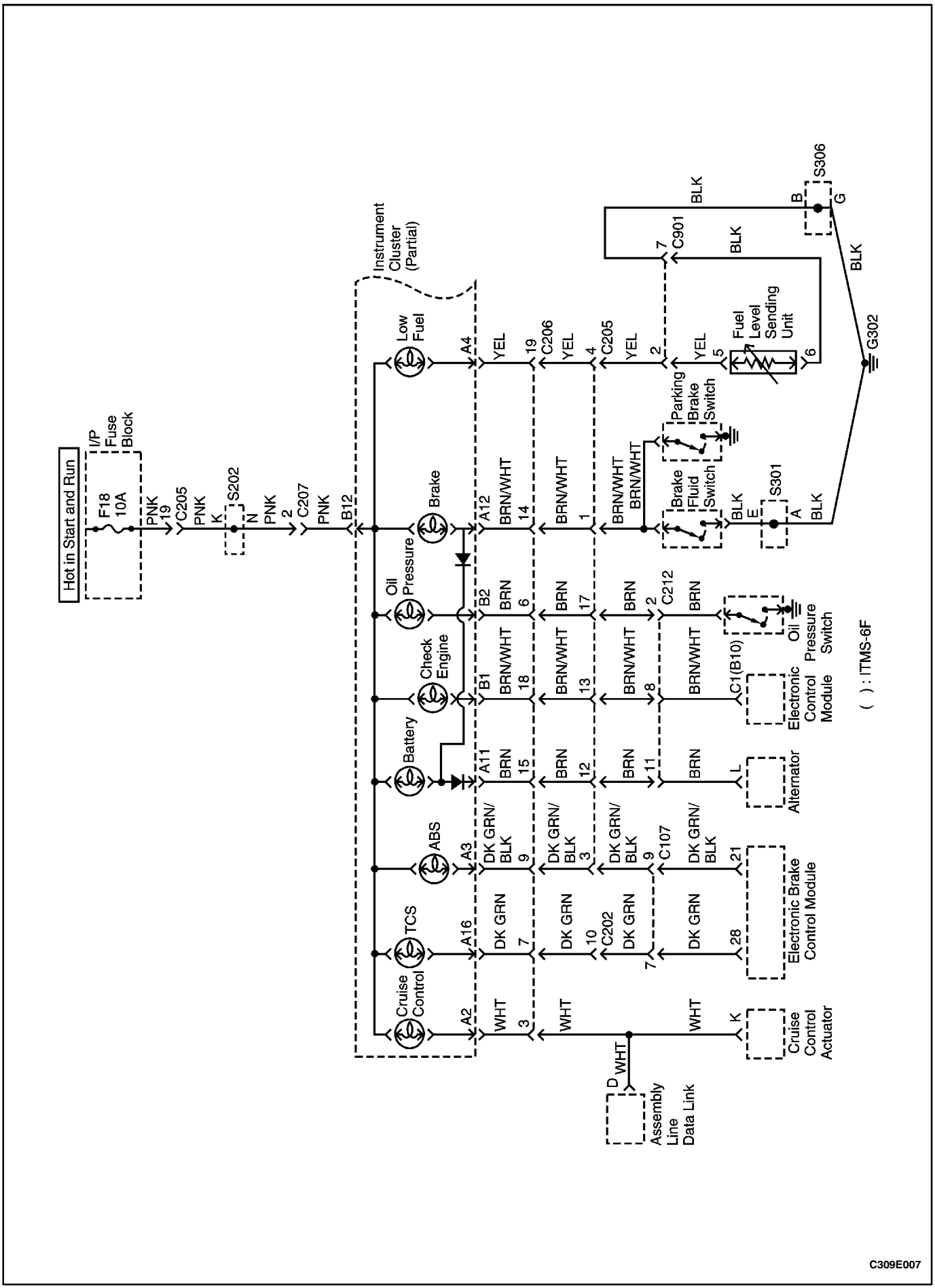
Hot in Start and Run
I/P Fuse Block
F18 10A
PNK 19
C205
PNK K
S202
N PNK 2
C207
PNK
B12
Instrument Cluster (Partial)
Low Fuel
Brake
Oil Pressure
Check Engine
Battery
ABS
TCS
Cruise Control
A4
A12
B2
B1
A11
A3
A16
A2
YEL 19
C206
YEL 4
C205
YEL 2
YEL 5
Fuel Level Sending Unit
6
BRN/WHT 14
BRN/WHT 1
BRN/WHT
BRN/WHT
Parking Brake Switch
Brake Fluid Switch
BLK E
S301
A BLK
BRN 6
BRN 17
BRN 2
C212
BRN
Oil Pressure Switch
BRN/WHT 18
BRN/WHT 13
BRN/WHT 8
BRN/WHT
C1(B10)
Electronic Control Module
BRN 15
BRN 12
BRN 11
BRN
L
Alternator
DK GRN/BLK 9
DK GRN/BLK 3
DK GRN/BLK 9
C107
DK GRN/BLK 21
Electronic Brake Control Module
DK GRN 7
DK GRN 10
C202
DK GRN 7
DK GRN 28
WHT 3
WHT
WHT
K
Cruise Control Actuator
D WHT
Assembly Line Data Link
BLK
C901
7
BLK
B
S306
G
BLK
G302
( ) : ITMS-6F
C309E007

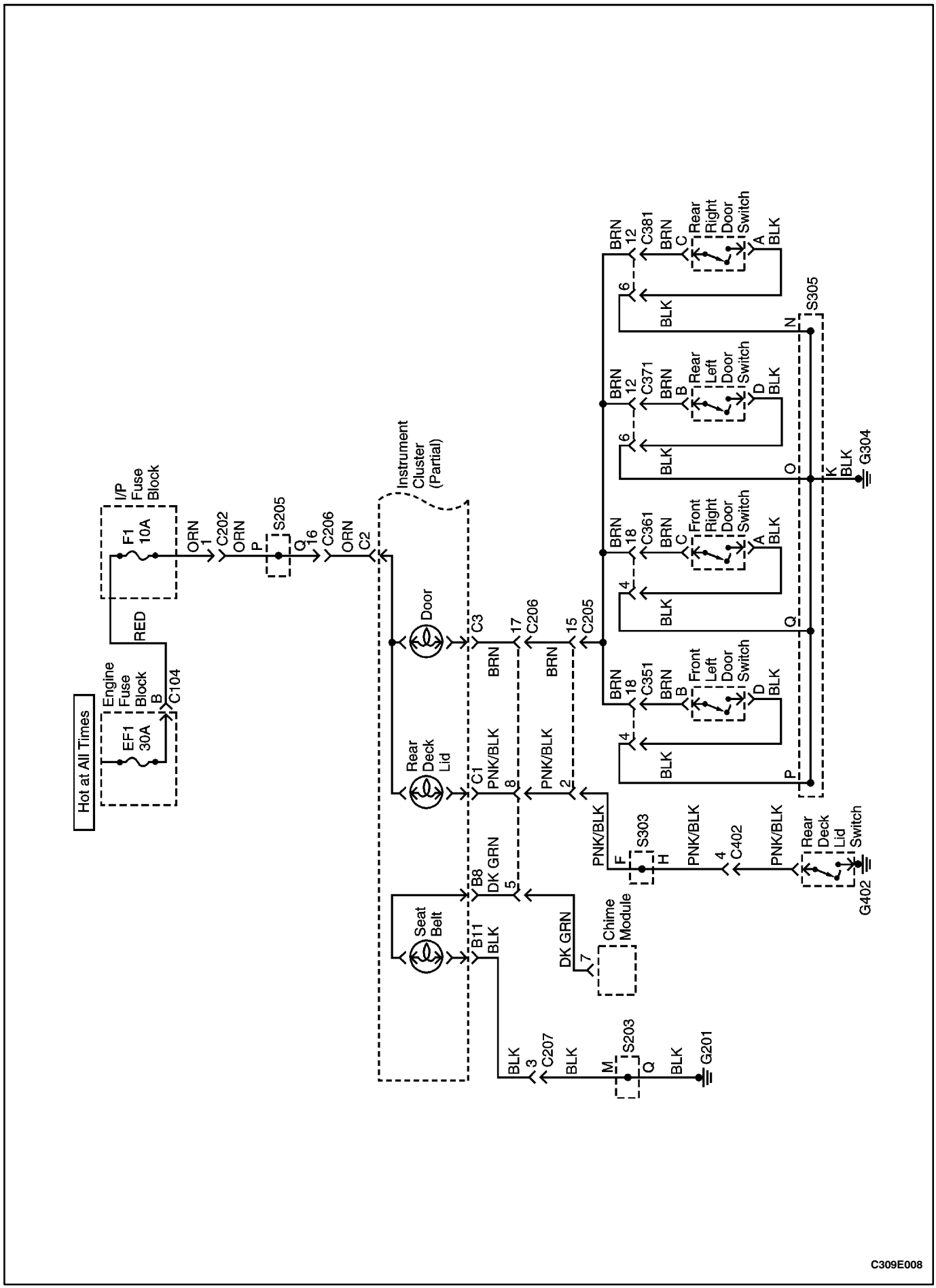
Hot at All Times
Engine Fuse Block
EF1 30A
B
C104
RED
I/P Fuse Block
F1 10A
ORN
1
C202
ORN
P
S205
Q
16
C206
ORN
C2
Instrument Cluster (Partial)
Door
C3
BRN
17
C206
BRN
15
C205
Rear Deck Lid
C1
PNK/BLK
8
PNK/BLK
2
Seat Belt
B8
DK GRN
5
B11
BLK
DK GRN
7
Chime Module
BLK
3
C207
BLK
M
S203
Q
BLK
G201
PNK/BLK
F
S303
H
PNK/BLK
4
C402
PNK/BLK
Rear Deck Lid Switch
G402
BRN
18
C351
BRN
B
Front Left Door Switch
D
BLK
4
BLK
P
BRN
18
C361
BRN
C
Front Right Door Switch
A
BLK
4
BLK
Q
BRN
12
C371
BRN
B
Rear Left Door Switch
D
BLK
6
BLK
O
BRN
12
C381
BRN
C
Rear Right Door Switch
A
BLK
6
BLK
N
S305
K
BLK
G304
C309E008

BLANK

INSTRUMENT CLUSTER INDICATOR LAMPS

Instrument Cluster Indicator Lamps Do Not Operate

Step	Action	Value(s)	Yes	No
1	Is fuse F1 or F18 blown?		Go to *Step 2*	Go to *Step 3*
2	1. Check for a short circuit and repair if necessary. 2. Replace the blown fuse. Is the repair complete?	–	System OK	–
3	1. Turn the ignition ON. 2. Check the Voltage at fuse F1 and F18. Does the battery Voltage match the Value specified?	11-14 V	Go to *Step 5*	Go to *Step 4*
4	Repair the open power supply circuit to fuse F1 or F18. Is the repair complete?	–	System OK	–
5	1. Remove the instrument cluster. 2. Disconnect the instrument cluster connectors C2 and B12. 3. Turn the ignition ON. Does the battery Voltage match the Value specified?	11-14 V	Go to *Step 7*	Go to *Step 6*
6	Repair the open circuit between fuses F1 and F18 and the instrument cluster connectors C2 and B12. Is the repair complete?	–	System OK	–
7	Check the instrument cluster warning lamp bulbs. Are the bulbs OK?	–	Go to *Step 9*	Go to *Step 8*
8	1. Replace any warning lamp bulbs that were defective. 2. Check the charging system to make sure the alternator is not overcharging. 3. Repair the charging system if necessary. Is the repair complete?	–	System OK	–
9	Replace the instrument cluster. Is the repair complete?	–	System OK	–

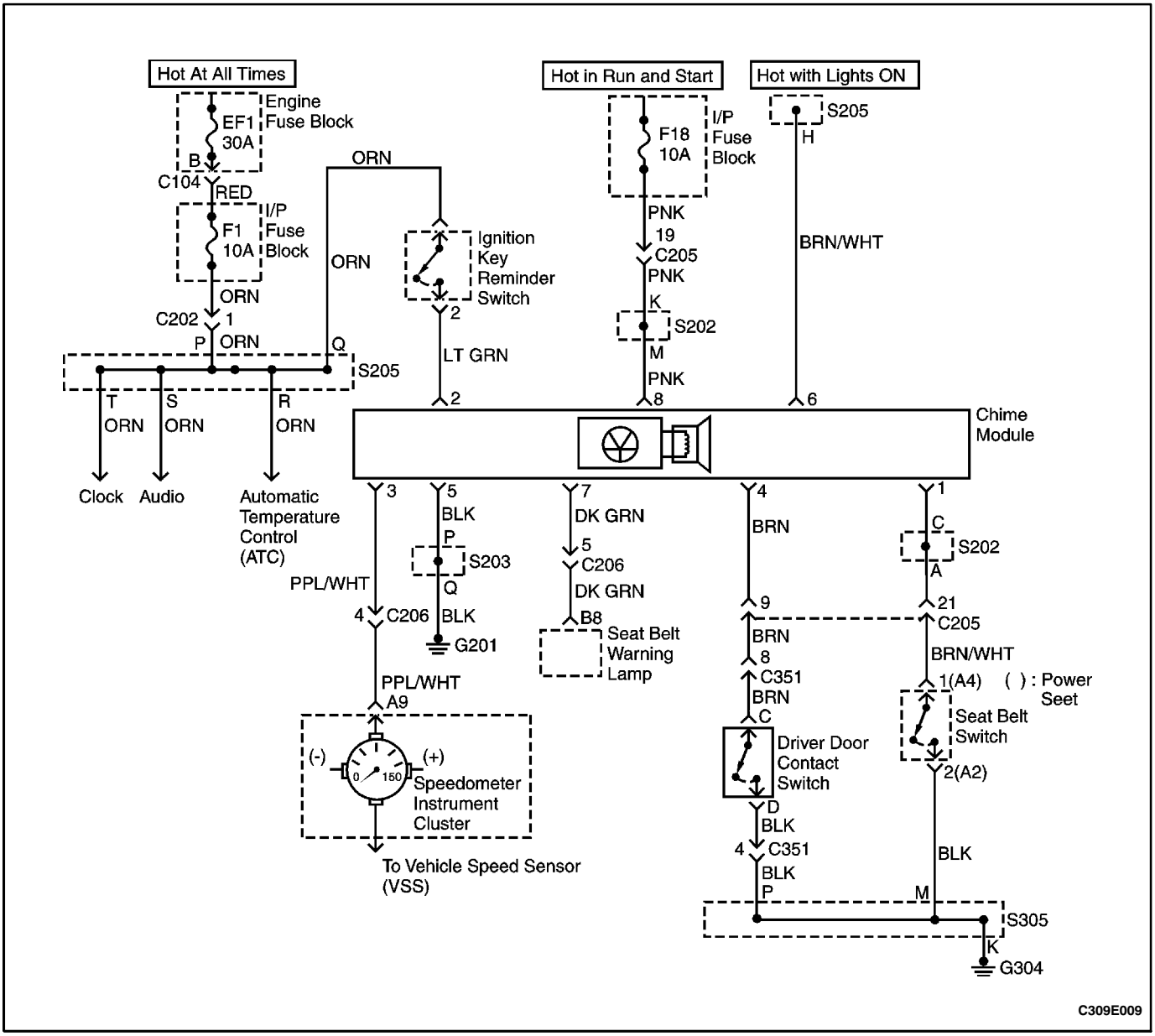
Hot At All Times
Hot in Run and Start
Hot with Lights ON
Engine Fuse Block
EF1 30A
B
C104
RED
I/P Fuse Block
F1 10A
ORN
C202
1
P
ORN
Q
S205
T
ORN
S
ORN
R
ORN
Clock
Audio
Automatic Temperature Control (ATC)
ORN
ORN
Ignition Key Reminder Switch
2
LT GRN
2
I/P Fuse Block
F18 10A
PNK
19
C205
PNK
K
S202
M
PNK
8
S205
H
BRN/WHT
6
Chime Module
3
5
BLK
P
S203
Q
G201
7
DK GRN
5
C206
DK GRN
B8
Seat Belt Warning Lamp
4
BRN
9
BRN
8
C351
BRN
C
Driver Door Contact Switch
D
BLK
4
C351
BLK
P
1
C
S202
A
21
C205
BRN/WHT
1(A4)
( ) : Power Seet
Seat Belt Switch
2(A2)
BLK
M
S305
K
G304
PPL/WHT
4
C206
PPL/WHT
A9
(-)
(+)
0
150
Speedometer Instrument Cluster
To Vehicle Speed Sensor (VSS)
C309E009

CHIME MODULE

No Chime With the Seat Belt Unfastened and the Key in the Ignition Switch

Diagnostic Aids

For headlamps reminder chime diagnosis, refer to *Section 9B, Lighting Systems*.

Test Description

The number(s) below refer to step(s) on the diagnostic table.

7. The chime module is under the instrument panel on the left side.
10. The wires at the ignition switch may be RED and BLK, but they connect to ORN and LT GRN at the two-pin connector.

Step	Action	Value(s)	Yes	No
1	Check fuse F18 and F1. Is fuse F18 or F1 blown?	–	Go to *Step 2*	Go to *Step 3*
2	1. Check for a short circuit and repair if necessary. 2. Replace the blown fuse. Is the repair complete?	–	System OK	–
3	Check the Voltage at fuse F1. Is the Voltage equal to the specified Value?	11-14 V	Go to *Step 5*	Go to *Step 4*
4	Repair the power supply for fuse F1. Is the repair complete?	–	System OK	–
5	1. Turn the ignition ON. 2. Check the Voltage at fuse F18. Is the Voltage equal to the specified Value?	11-14 V	Go to *Step 7*	Go to *Step 6*
6	Repair the power supply for fuse F18. Is the repair complete?	–	System OK	–
7	1. Disconnect the chime module electrical connector. 2. Turn the ignition ON. 3. Check the Voltage at terminal 8 of the chime module connector. Is the Voltage equal to the specified Value?	11-14 V	Go to *Step 9*	Go to *Step 8*
8	Repair the open circuit between fuse F18 and the chime module connector terminal 8. Is the repair complete?	–	System OK	–
9	1. Disconnect the chime module electrical connector. 2. Insert the key in the ignition switch. 3. Check the Voltage at terminal 2 of the chime module connector. Is the Voltage equal to the specified Value?	11-14 V	Go to *Step 15*	Go to *Step 10*
10	1. There are two wires from the key reminder switch which lead to an instrument harness connector with LT GRN and ORN wires. Disconnect that two-pin connector. 2. Check the Voltage at the ORN wire. Is the Voltage equal to the specified Value?	11-14 V	Go to *Step 12*	Go to *Step 11*
11	Repair the open circuit between fuse F1 and the key reminder switch. Is the repair complete?	–	System OK	–

No Chime With the Seat Belt Unfastened and the Key in the Ignition Switch (Cont'd)

Step	Action	Value(s)	Yes	No
12	1. Insert a key into the ignition switch. 2. With the two-pin key reminder connector still disconnected, connect one ohmmeter lead to each wire leading to the key reminder switch. Does the ohmmeter indicate the specified Value?	≈ 0 Ω	Go to *Step 14*	Go to *Step 13*
13	Replace the ignition switch. Is the repair complete?	–	System OK	–
14	Repair the open circuit between the connector for the key reminder switch and the chime module connector terminal 2. Is the repair complete?	–	System OK	–
15	Use an ohmmeter to check continuity between ground and terminal 5 of the chime module connector. Does the ohmmeter indicate the specified Value?	≈ 0 Ω	Go to *Step 17*	Go to *Step 16*
16	Repair the open circuit between ground and terminal 5 of the chime module connector. Is the repair complete?	–	System OK	–
17	1. Unfasten the driver seat belt. 2. With the chime module electrical connector still disconnected, connect an ohmmeter between ground and terminal 1 of the chime module. Does the ohmmeter indicate the specified Value?	≈ 0 Ω	Go to *Step 18*	Go to *Step 19*
18	Replace the chime module. Is the repair complete?	–	System OK	–
19	1. Disconnect the seat belt switch under the driver seat. 2. Connect one ohmmeter lead to each wire leading to the driver seat belt switch. Does the ohmmeter indicate the specified Value?	≈ 0 Ω	Go to *Step 21*	Go to *Step 20*
20	Replace the seat belt switch. Is the repair complete?	–	System OK	–
21	Repair the open circuit between ground and terminal 1 of the chime module connector. Is the repair complete?	–	System OK	–

No Chime With the Door Open and the Key in the Ignition Switch

Test Description

The number(s) below refer to step(s) on the diagnostic table.

7. The chime module is under the instrument panel on the left side.
10. The wires at the ignition switch may be RED and BLK, but they connect to ORN and LT GRN at the two-pin connector.

Step	Action	Value(s)	Yes	No
1	Check fuse F18 and F1. Is fuse F18 or F1 blown?	–	Go to *Step 2*	Go to *Step 3*
2	1. Check for a short circuit and repair if necessary. 2. Replace the blown fuse. Is the repair complete?	–	System OK	–
3	Check the Voltage at fuse F1. Is the Voltage equal to the specified Value?	11-14 V	Go to *Step 5*	Go to *Step 4*
4	Repair the power supply for fuse F1. Is the repair complete?	–	System OK	–
5	1. Turn the ignition ON. 2. Check the Voltage at fuse F18. Is the Voltage equal to the specified Value?	11-14 V	Go to *Step 7*	Go to *Step 6*
6	Repair the power supply for fuse F18. Is the repair complete?	–	System OK	–
7	1. Disconnect the chime module electrical connector. 2. Turn the ignition ON. 3. Check the Voltage at terminal 8 of the chime module connector. Is the Voltage equal to the specified Value?	11-14 V	Go to *Step 9*	Go to *Step 8*
8	Repair the open circuit between fuse F18 and the chime module connector terminal 8. Is the repair complete?	–	System OK	–
9	1. Disconnect the chime module electrical connector. 2. Insert the key in the ignition switch. 3. Check the Voltage at terminal 2 of the chime module connector. Is the Voltage equal to the specified Value?	11-14 V	Go to *Step 15*	Go to *Step 10*
10	1. There are two wires from the key reminder switch which lead to an instrument harness connector with LT GRN and ORN wires. Disconnect that two-pin connector. 2. Check the Voltage at the ORN wire. Is the Voltage equal to the specified Value?	11-14 V	Go to *Step 12*	Go to *Step 11*
11	Repair the open circuit between fuse F1 and the key reminder switch. Is the repair complete?	–	System OK	–
12	1. Insert a key into the ignition switch. 2. With the two-pin key reminder connector still disconnected, connect one ohmmeter lead to each wire leading to the key reminder switch. Does the ohmmeter indicate the specified Value?	≈ 0 Ω	Go to *Step 14*	Go to *Step 13*
13	Replace the ignition switch. Is the repair complete?	–	System OK	–

No Chime With the Door Open and the Key in the Ignition Switch (Cont'd)

Step	Action	Value(s)	Yes	No
14	Repair the open circuit between the connector for the key reminder switch and the chime module connector terminal 2. Is the repair complete?	–	System OK	–
15	Use an ohmmeter to check continuity between ground and terminal 5 of the chime module connector. Does the ohmmeter indicate the specified Value?	≈ 0 Ω	Go to *Step 17*	Go to *Step 16*
16	Repair the open circuit between ground and terminal 5 of the chime module connector. Is the repair complete?	–	System OK	–
17	1. Open the driver door. 2. With the chime module electrical connector still disconnected, connect an ohmmeter between ground and terminal 4 of the chime module. Does the ohmmeter indicate the specified Value?	≈ 0 Ω	Go to *Step 18*	Go to *Step 19*
18	Replace the chime module. Is the repair complete?	–	System OK	–
19	Repair the open circuit between ground and terminal 4 of the chime module connector. (The driver door contact switch should be closed when the driver door is open.) Is the repair complete?	–	System OK	–

No Overspeed Chime When the Vehicle Exceeds 120 km/h (75 mph)

Test Description

The number(s) below refer to step(s) on the diagnostic table.

7. The chime module is under the instrument panel on the left side.

Step	Action	Value(s)	Yes	No
1	Check F1. Is fuse F1 blown?	–	Go to *Step 2*	Go to *Step 3*
2	1. Check for a short circuit and repair if necessary. 2. Replace fuse F1 Is the repair complete?	–	System OK	–
3	Check the Voltage at fuse F1. Is the Voltage equal to the specified Value?	11-14 V	Go to *Step 5*	Go to *Step 4*
4	Repair the power supply for fuse F1. Is the repair complete?	–	System OK	–
5	1. Disconnect the chime module electrical connector. 2. Turn the ignition ON. 3. Check the Voltage at terminal 8 of the chime module connector. Is the Voltage equal to the specified Value?	11-14 V	Go to *Step 7*	Go to *Step 6*
6	Repair the open circuit between fuse F18 and the chime module connector terminal 8. Is the repair complete?	–	System OK	–
7	Use an ohmmeter to check continuity between ground and terminal 5 of the chime module connector. Does the ohmmeter indicate the specified Value?	≈ 0 Ω	Go to *Step 9*	Go to *Step 8*
8	Repair the open circuit between ground and terminal 5 of the chime module connector. Is the repair complete?	–	System OK	–
9	Connect an ohmmeter between terminal A9 of the instrument cluster connector and the chime module connector terminal 3. Does the ohmmeter indicate the specified Value?	≈ 0 Ω	Go to *Step 11*	Go to *Step 10*
10	Repair the open circuit between the instrument cluster connector terminal A9 and the chime module connector terminal 3. Is the repair complete?	–	System OK	–
11	Replace the chime module. Does the overspeed warning work after the chime module has been replaced?	–	System OK	Go to *Step 12*
12	Replace the speedometer. Is the repair complete?	–	System OK	–

MAINTENANCE AND REPAIR

ON-VEHICLE SERVICE

CIGAR LIGHTER

Removal Procedure

1. Disconnect the negative battery cable.
2. Remove the shift lever trim panel.
3. Remove the screws and the ashtray housing.

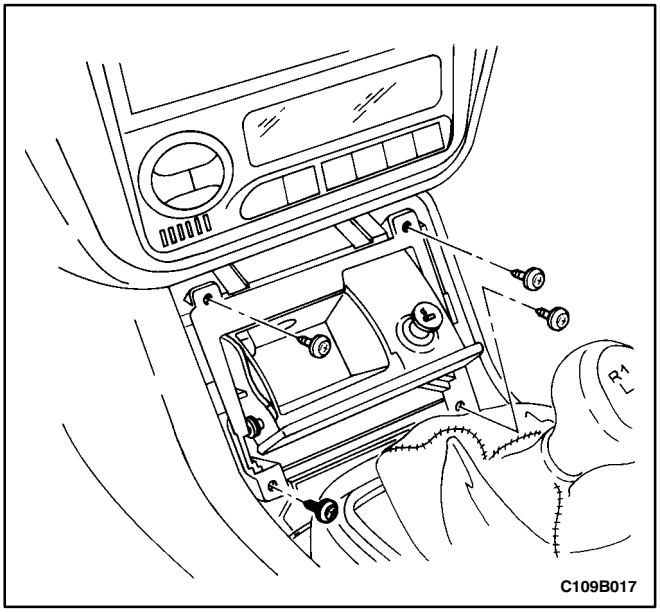

4. Disconnect the ashtray housing electrical connector.
5. Disconnect the cigar lighter electrical connector.
6. Remove the cigar lighter from the cigar lighter housing.
7. Remove the cigar lighter housing from the ashtray housing.

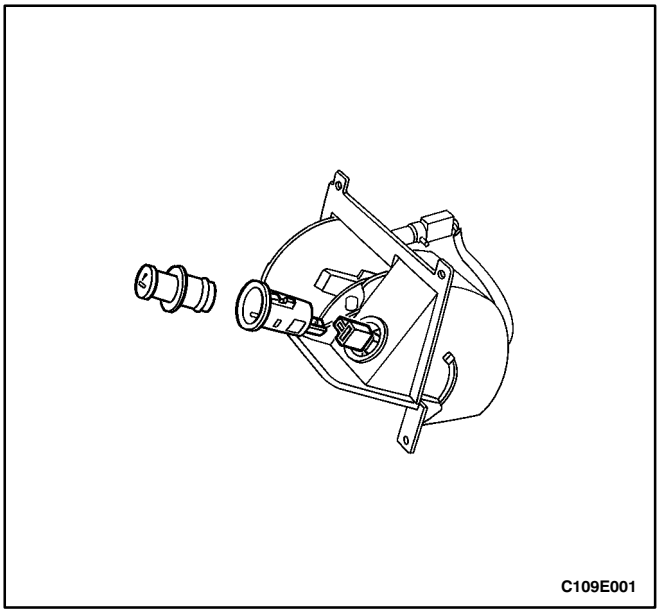

Installation Procedure

1. Install the cigar lighter housing in the ashtray housing.
2. Install the cigar lighter in the cigar lighter housing.
3. Connect the cigar lighter electrical connector.

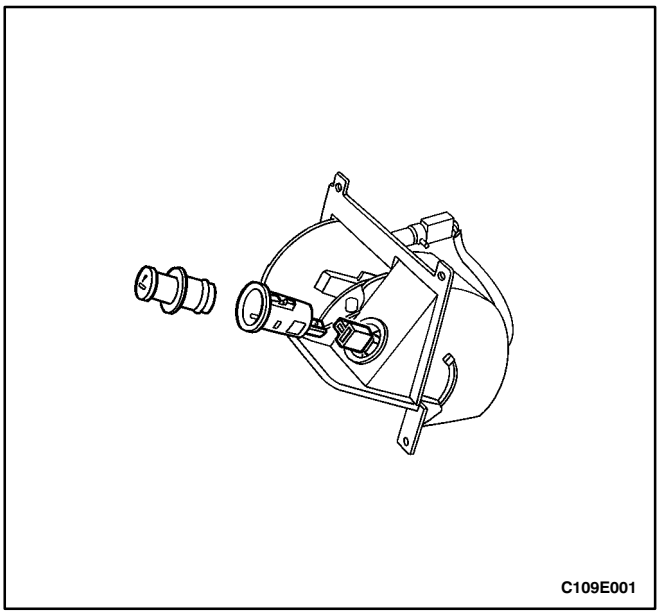

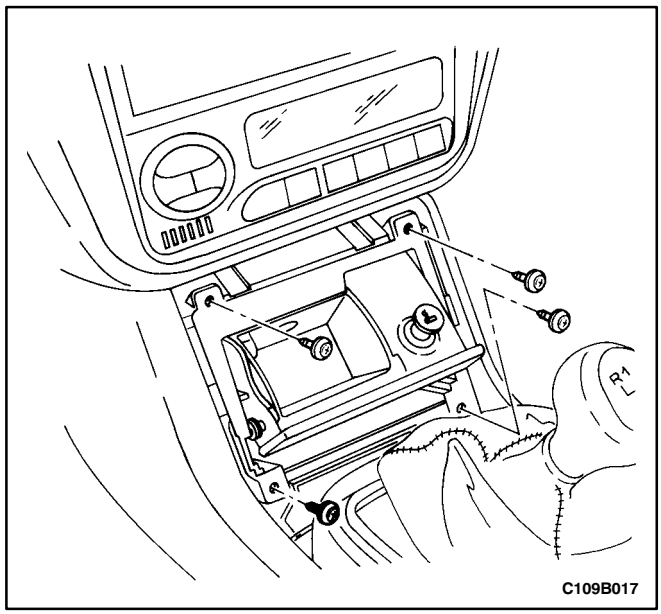

4. Connect the ashtray housing electrical connector.
5. Install the ashtray housing with the screws.

Tighten

Tighten the ashtray housing screws to 2.5 N•m (22 lb-in).

6. Install the shift lever trim panel.
7. Connect the negative battery cable.

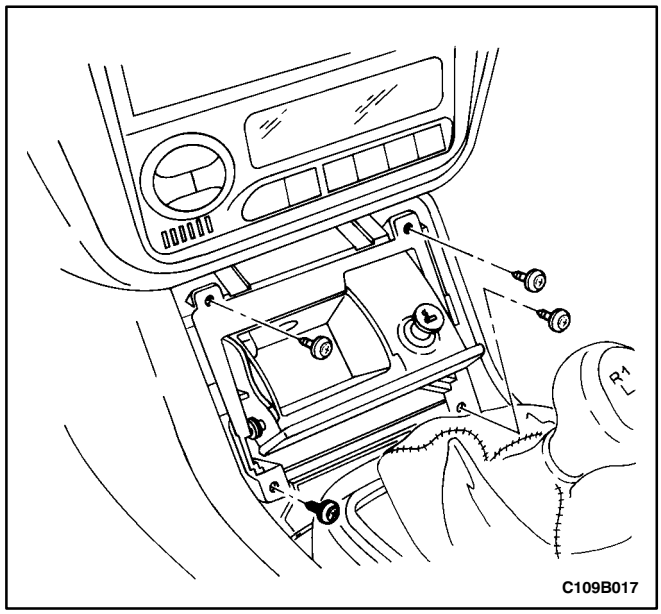

ASHTRAY

Removal Procedure

1. Disconnect the negative battery cable.
2. Remove the shift lever trim panel.
3. Remove the screws and the ashtray housing.
4. Disconnect the ashtray electrical connector.
5. Remove the cigar lighter. Refer to “Cigar Lighter” in this section.
6. Remove the ashtray lamp. Refer to *Section 9B, Lighting Systems*.

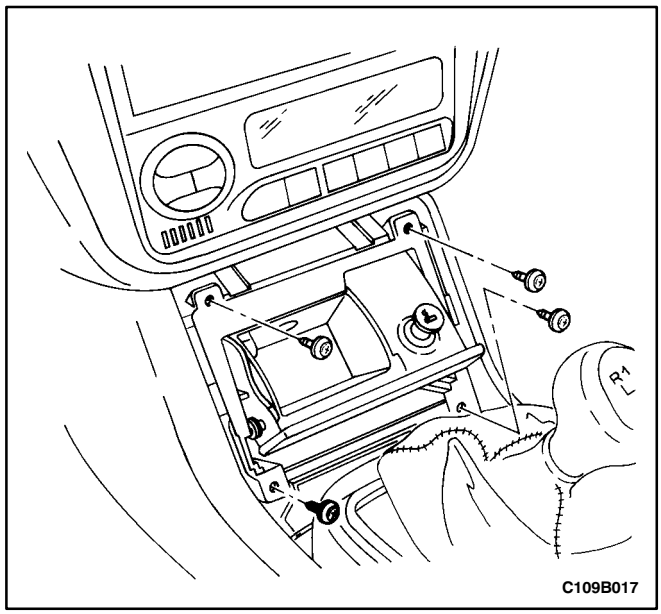

Installation Procedure

1. Install the ashtray lamp. Refer to *Section 9B, Lighting Systems*.
2. Install the cigar lighter. Refer to “Cigar Lighter” in this section.
3. Connect the ashtray electrical connector.
4. Install the screws and the ashtray housing.

Tighten

Tighten the ashtray housing screws to 2.5 N•m (22 lb-in).

5. Install the shift lever trim panel.
6. Connect the negative battery cable.

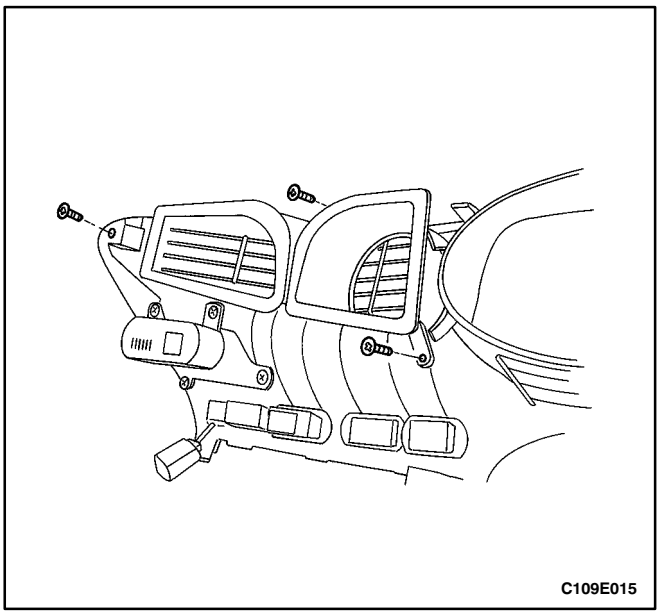

INSTRUMENT PANEL VENTS

Removal Procedure

1. Remove the instrument cluster trim panel. Refer to “Instrument Cluster Trim Panel” in this section.
2. Remove the screws and the Vents.

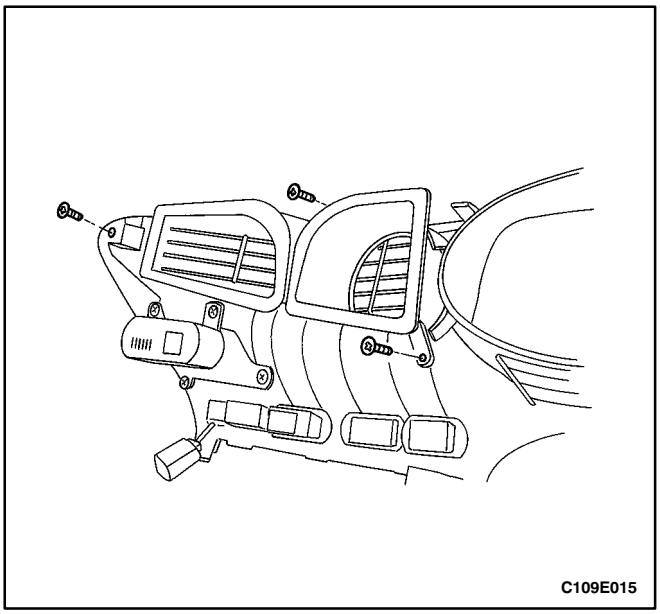

Installation

1. Install the Vents with the screws.

   Tighten

   Tighten the Vent screws to 3 N•m (27 lb-in).
2. Install the instrument cluster trim panel. Refer to “Instrument Cluster Trim Panel” in this section.

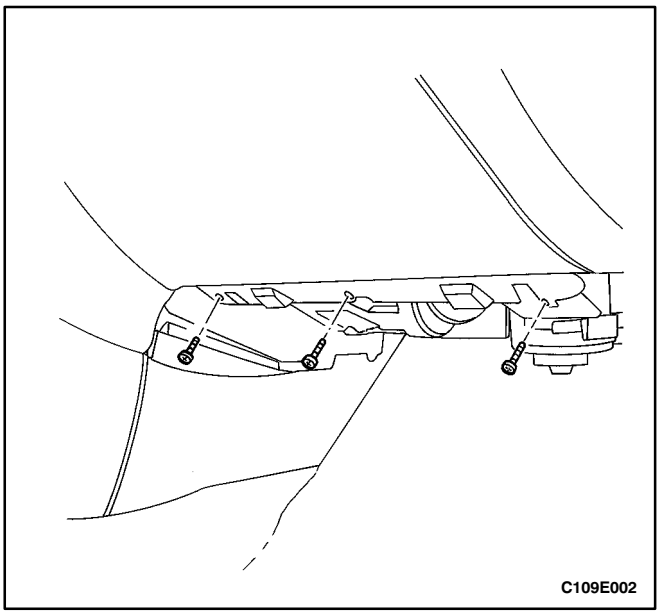

GLOVE BOX

(Left–Hand Drive Shown, Right–Hand DRive Similar)

Removal Procedure

1. Remove the footwell upper cover.
2. Remove the screws at the base of the glove box.
3. Open and remove the glove box.

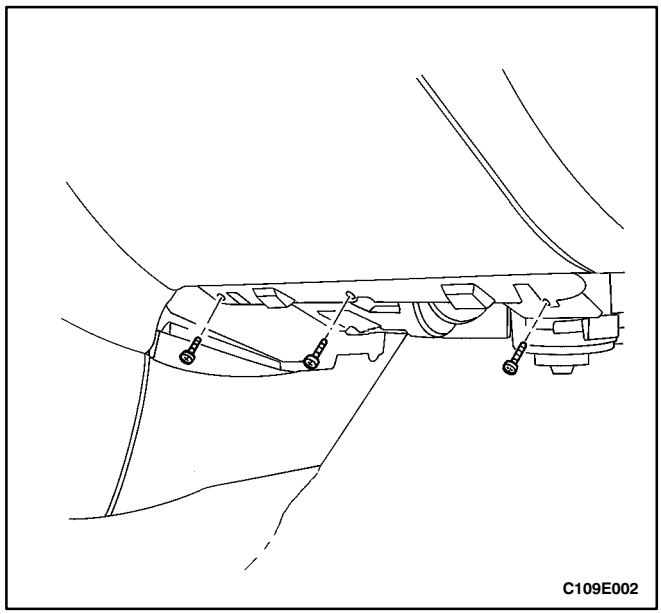

Installation Procedure

1. Position the glove box in the instrument panel.
2. Install the glove box with the screws.

   Tighten

   Tighten the glove box screws to 2.5 N•m (22 lb-in).
3. Install the footwell upper cover.

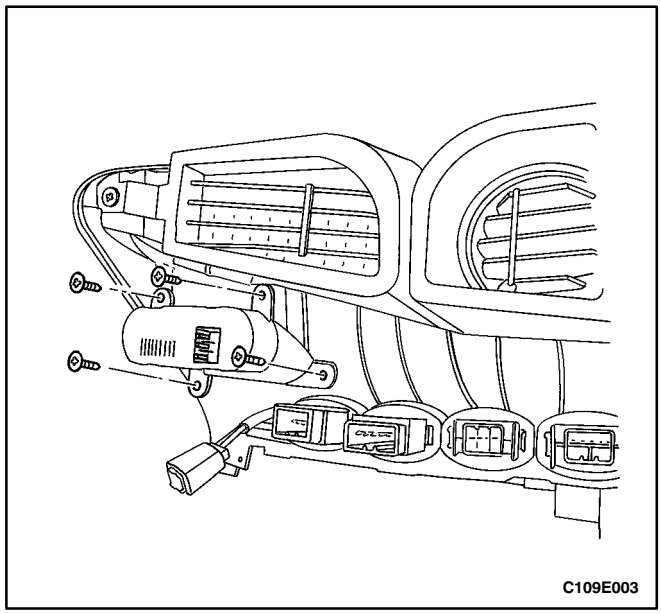

DIGITAL CLOCK

Removal Procedure

1. Remove the instrument cluster trim panel. Refer to “Instrument Cluster Trim Panel” in this section.
2. Remove the screws and the digital clock.

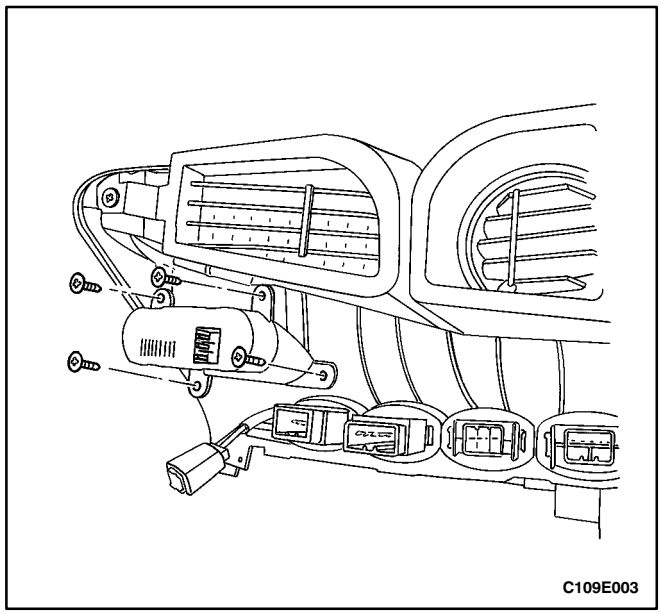

Installation Procedure

1. Install the digital clock with the screws.

   Tighten

   Tighten the digital clock screws to 3 N•m (27 lb-in).
2. Install the instrument cluster trim panel. Refer to “Instrument Cluster Trim Panel” in this section.

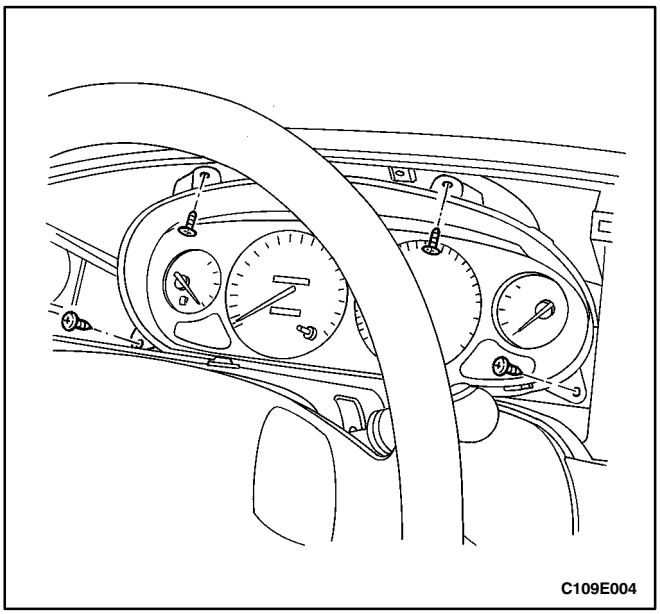

INSTRUMENT CLUSTER

Removal Procedure

1. Remove the instrument cluster trim panel. Refer to “Instrument Cluster Trim Panel” in this section.
2. Remove the screws and the instrument cluster.

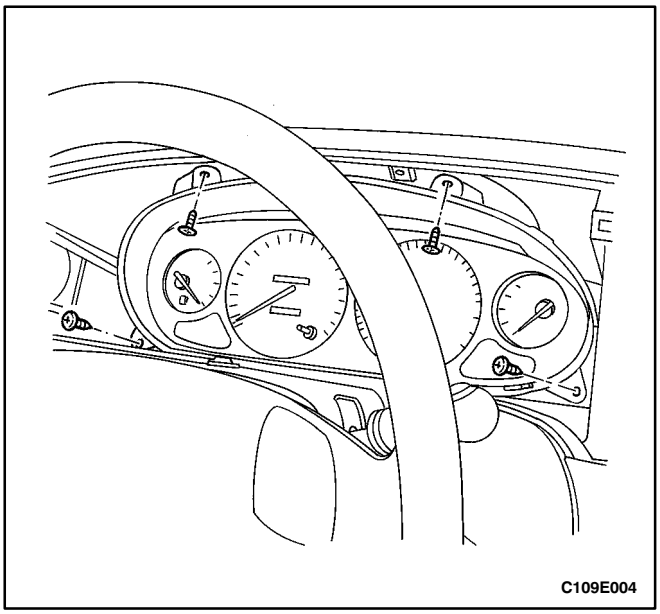

Installation Procedure

1. Install the instrument cluster with the screws.

   Tighten

   Tighten the instrument cluster screws to 3 N•m (27 lb-in).
2. Install the instrument cluster trim panel. Refer to “Instrument Cluster Trim Panel” in this section.

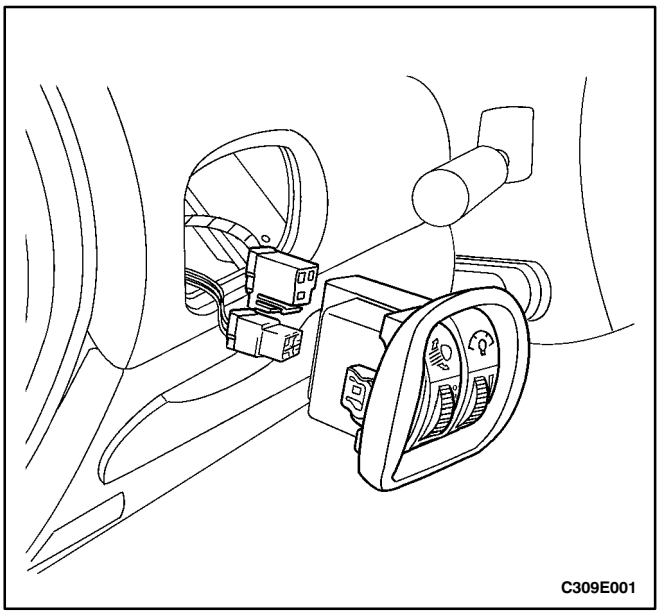

INSTRUMENT CLUSTER DIMMER/HEADLAMP LEVELING SWITCH

(Left–Hand Drive Shown, Right–Hand Drive Similar)

Removal Procedure

1. Remove the instrument cluster dimmer/headlamp leveling switch assembly.
2. Disconnect the electrical connectors.

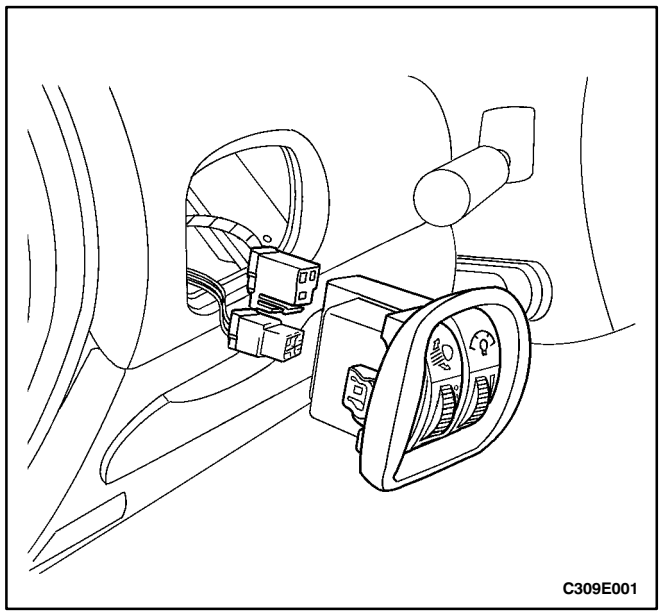
C309E001

Installation Procedure

1. Replace the appropriate switch.
2. Connect the electrical connectors.
3. Install the instrument cluster dimmer/headlamp leveling switch assembly.

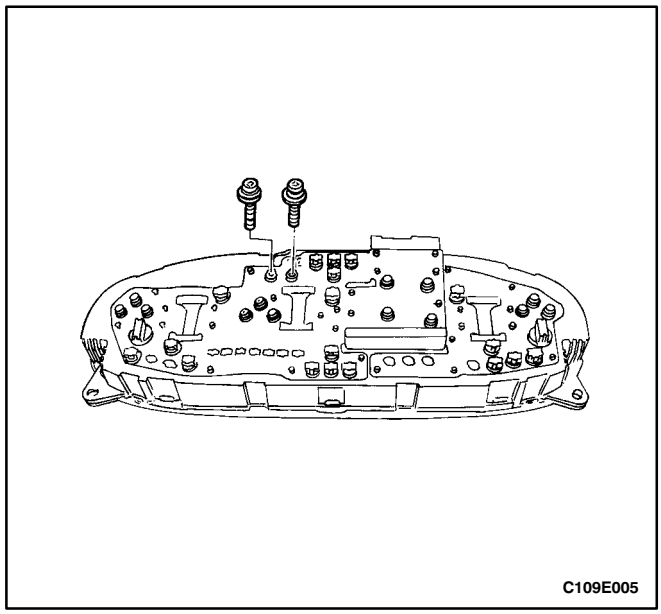
C109E005

SPEEDOMETER/ODOMETER/TRIP ODOMETER

Removal Procedure

1. Disconnect the negative battery cable.
2. Remove the instrument cluster. Refer to “Instrument Cluster” in this section.
3. Remove the cluster illumination connector screws.

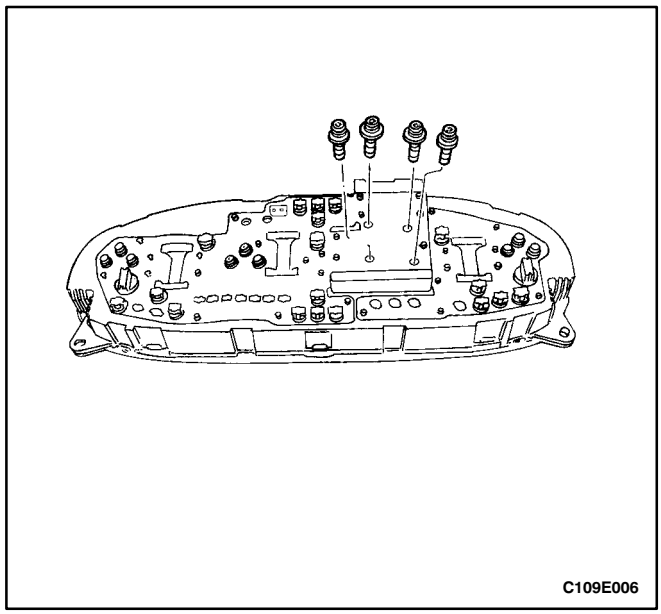
C109E006

4. Press the clips down and remove the instrument cluster lens.
5. Remove the screws and the speedometer/odometer from the instrument cluster.

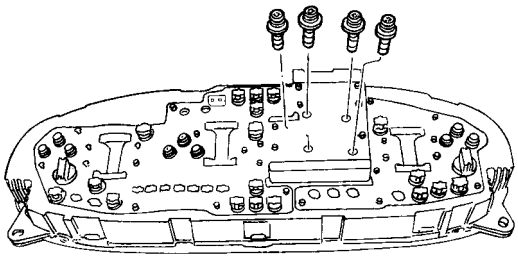

C109E006

Installation Procedure

1. Install the speedometer/odometer with the screws.

Tighten

Tighten the speedometer/odometer screws to 2 N•m (18 lb-in).

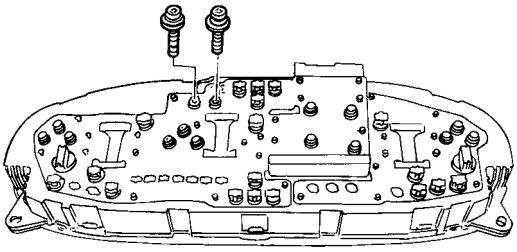

C109E005

3. Install the instrument cluster lens.
4. Install the cluster illumination connector screws.

Tighten

Tighten the cluster illumination connector screws to 2 N•m (18 lb-in).

5. Install the instrument cluster. Refer to “Instrument Cluster” in this section.
6. Connect the negative battery cable.

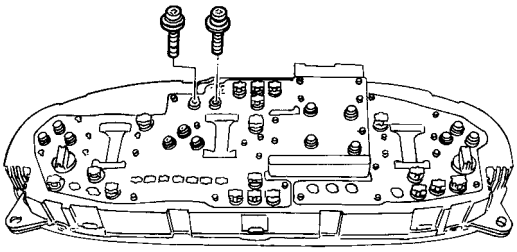

C109E005

TACHOMETER

Removal Procedure

1. Disconnect the negative battery cable.
2. Remove the instrument cluster. Refer to “Instrument Cluster” in this section.
3. Remove the cluster illumination connector screws.

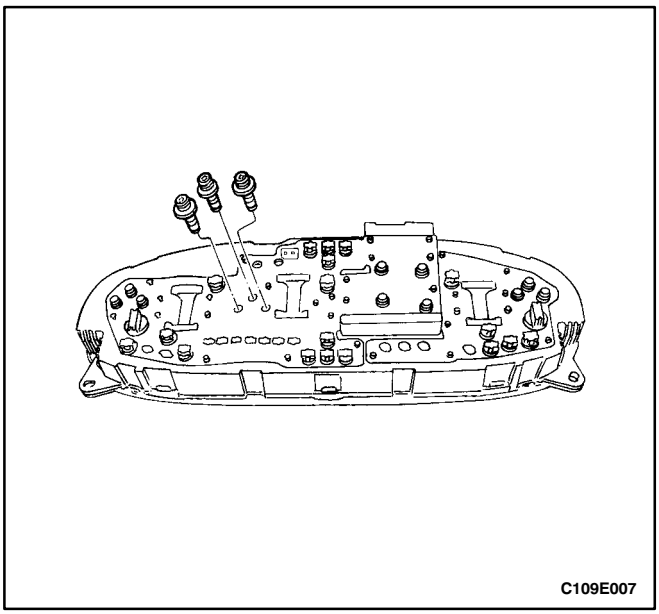

4. Press the clips down and remove the instrument cluster lens.
5. Remove the screws and the tachometer from the instrument cluster.

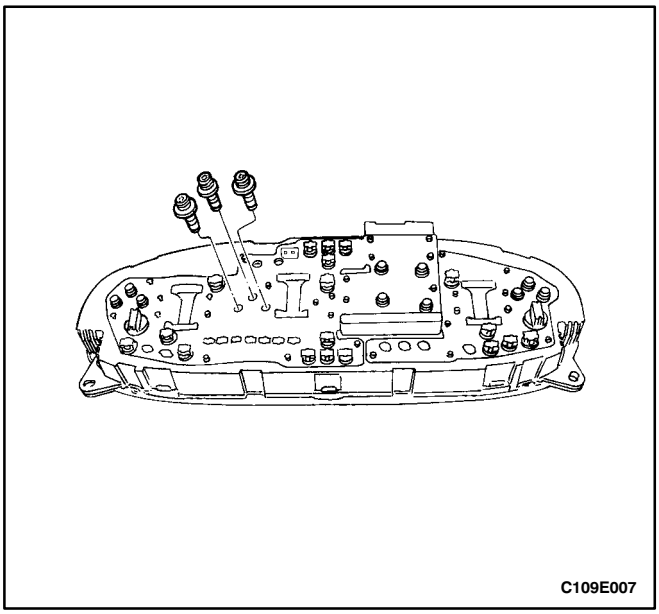

Installation Procedure

1. Install the tachometer to the instrument cluster with the screws.

   Tighten

   Tighten the tachometer screws to 2 N•m (18 lb-in).

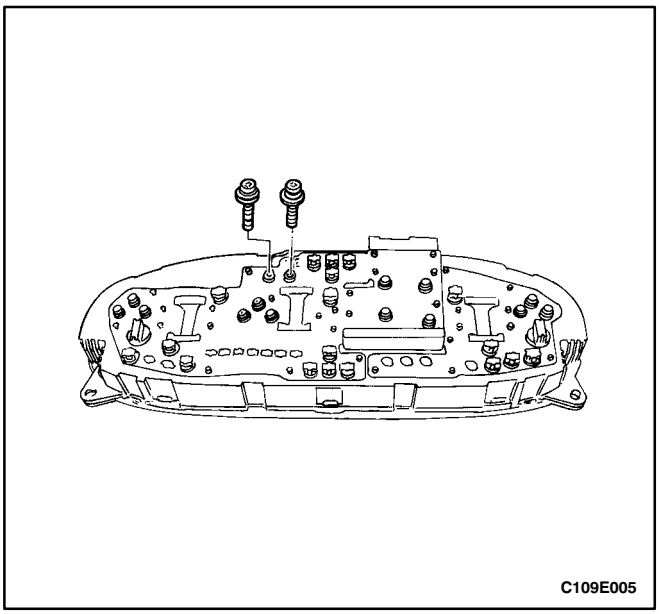

2. Install the instrument cluster lens with the screws.
3. Install the cluster illumination connector screws.

   Tighten

   Tighten the cluster illumination connector screws to 2 N•m (18 lb-in).
4. Install the instrument cluster. Refer to “Instrument Cluster” in this section.
5. Connect the negative battery cable.

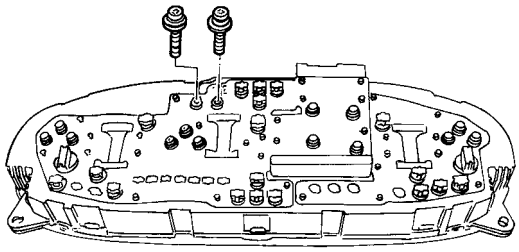

C109E005

FUEL GAUGE

Removal Procedure

1. Disconnect the negative battery cable.
2. Remove the instrument cluster. Refer to “Instrument Cluster” in this section.
3. Remove the cluster illumination connector screws.
4. Press the clips down and remove the instrument cluster lens.

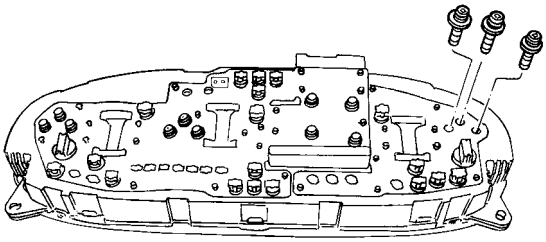

C109E008

5. Remove the fuel gauge screws and the fuel gauge from the cluster assembly.

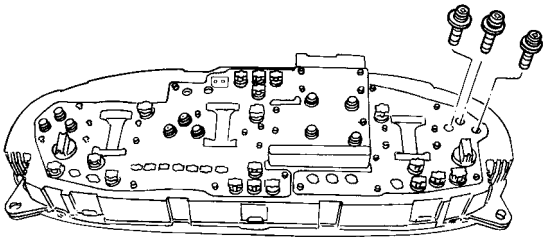

C109E008

Installation Procedure

1. Install the fuel gauge to the cluster assembly with the screws.

   Tighten

   Tighten the fuel gauge screws to 2 N•m (18 lb-in).

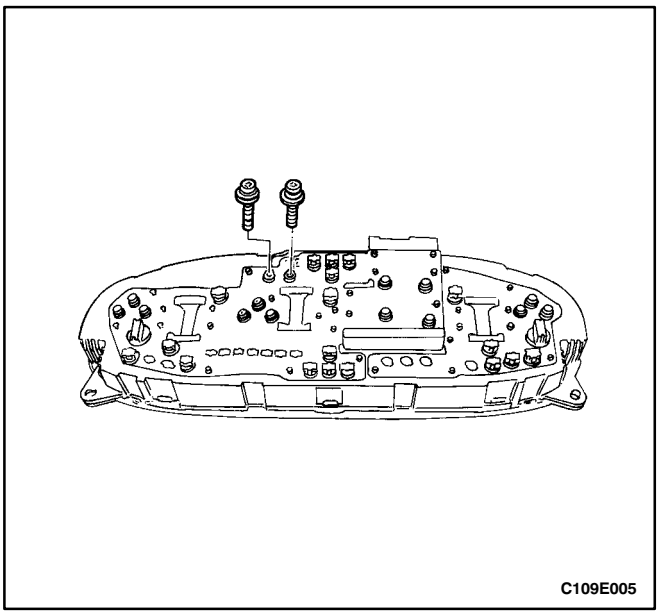

2. Install the instrument cluster lens with the instrument cluster lens screws.
3. Install the cluster illumination connector screws.

Tighten

Tighten the cluster illumination connector screws to 2 N•m (18 lb-in).

4. Install the instrument cluster. Refer to “Instrument Cluster” in this section.
5. Connect the negative battery cable.

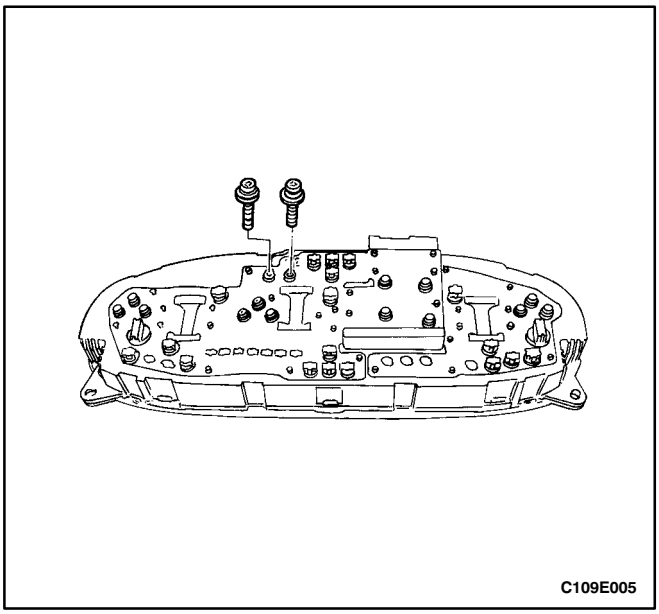

TEMPERATURE GAUGE

Removal Procedure

1. Disconnect the negative battery cable.
2. Remove the instrument cluster. Refer to “Instrument Cluster” in this section.
3. Remove the cluster illumination connector screws.
4. Press the clips down and remove the instrument cluster lens.

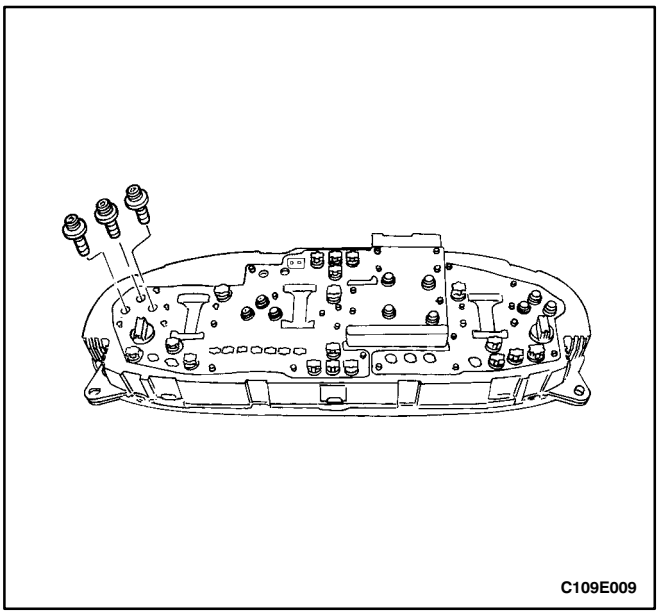

4. Remove the screws and the temperature gauge from the cluster assembly.

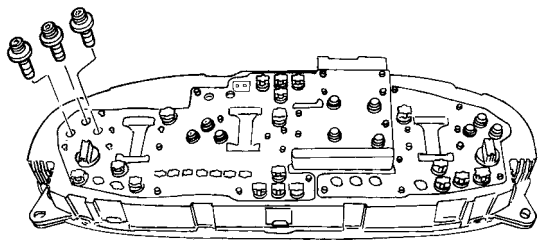

C109E009

Installation Procedure

1. Install the temperature gauge to the cluster assembly with the screws.

   Tighten

   Tighten the temperature gauge screws to 2 N•m (18 lb-in).

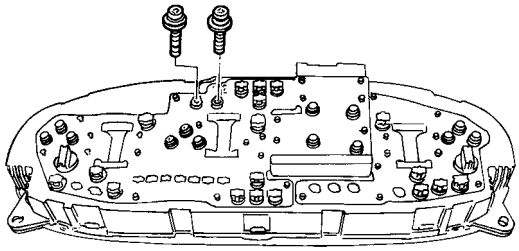

C109E005

2. Install the instrument cluster lens.
3. Install the cluster illumination connector screws.

   Tighten

   Tighten the cluster illumination connector screws to 2 N•m (18 lb-in).
4. Install the instrument cluster. Refer to “Instrument Cluster” in this section.
5. Connect the negative battery cable.

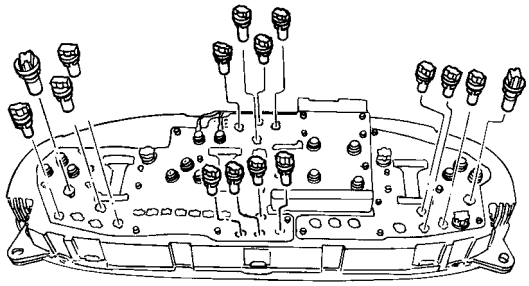

C109E010

INSTRUMENT CLUSTER INDICATOR LAMPS

Removal Procedure

1. Disconnect the negative battery cable.
2. Remove the instrument cluster. Refer to “Instrument Cluster” in this section.
3. Remove the defective bulb from the rear of the cluster.

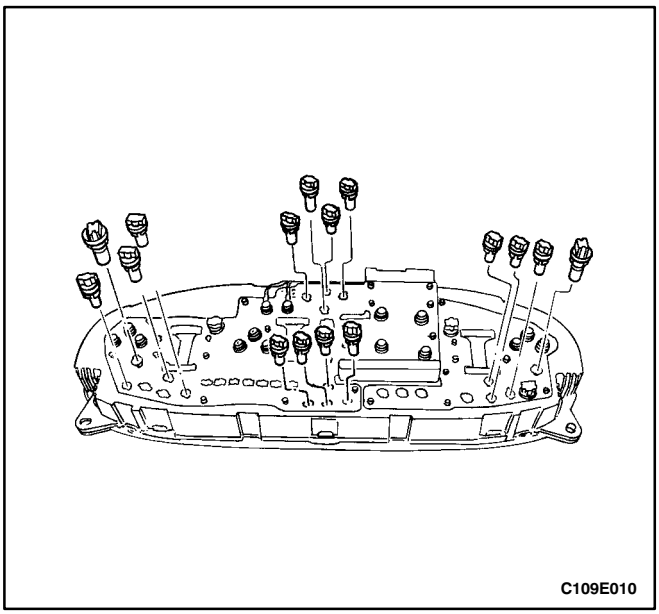

Installation Procedure

1. Install the new bulb.
2. Install the instrument cluster. Refer to “Instrument Cluster” in this section.
3. Connect the negative battery cable.

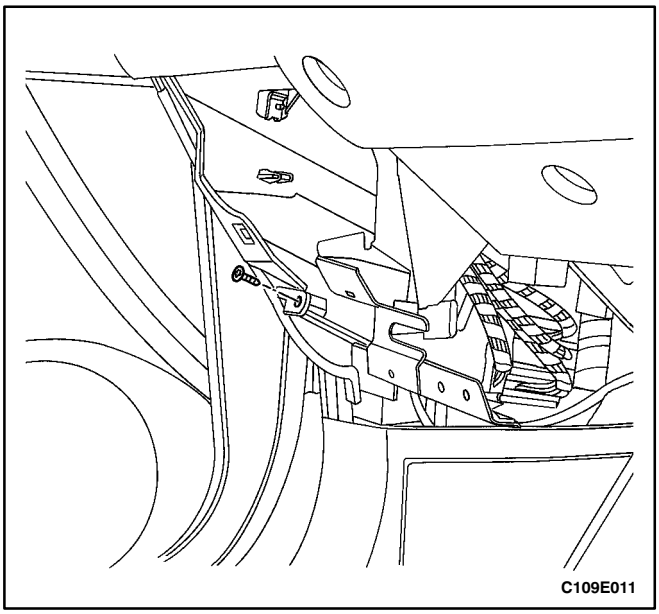

CHIME MODULE

(Left–Hand Drive Shown, Right–Hand Drive Similar)

Removal Procedure

1. Disconnect the negative battery cable.
2. Remove the hood release handle screw and the knee bolster trim panel.
3. Remove the screw and the instrument panel side trim cover.

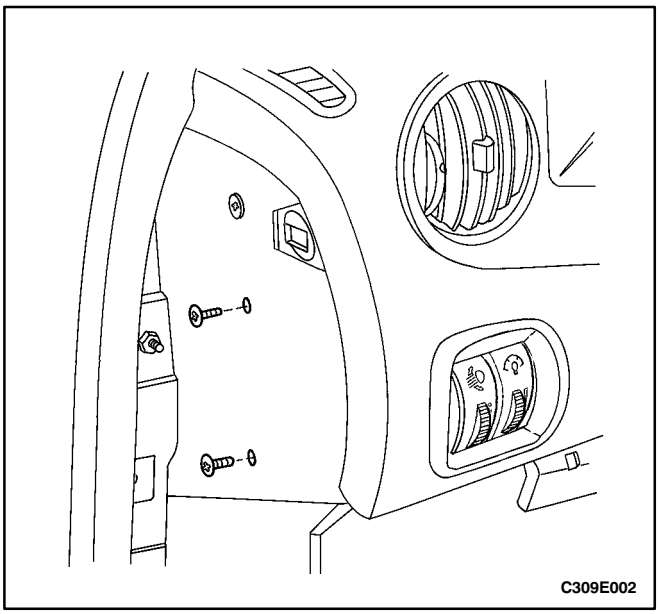

4. Disconnect the electrical connector.
5. Remove the screws and the chime module.

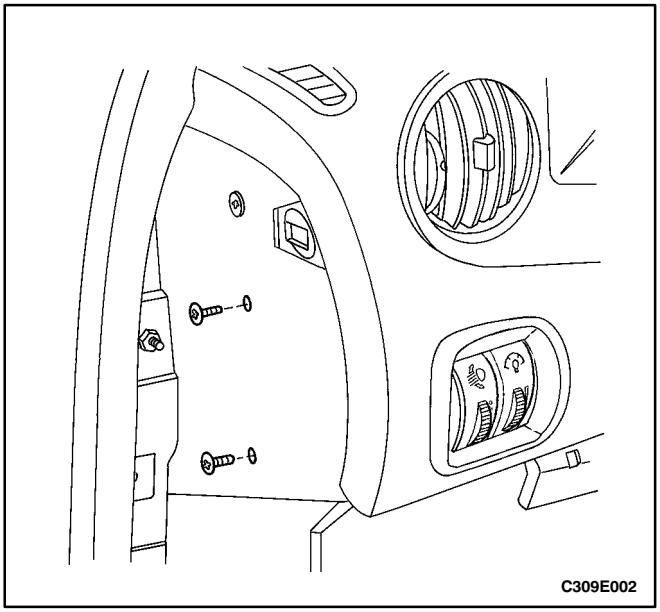

Installation Procedure

1. Install the chime module with the screws.

   Tighten

   Tighten the chime module screws to 4 N•m (35 lb-in).

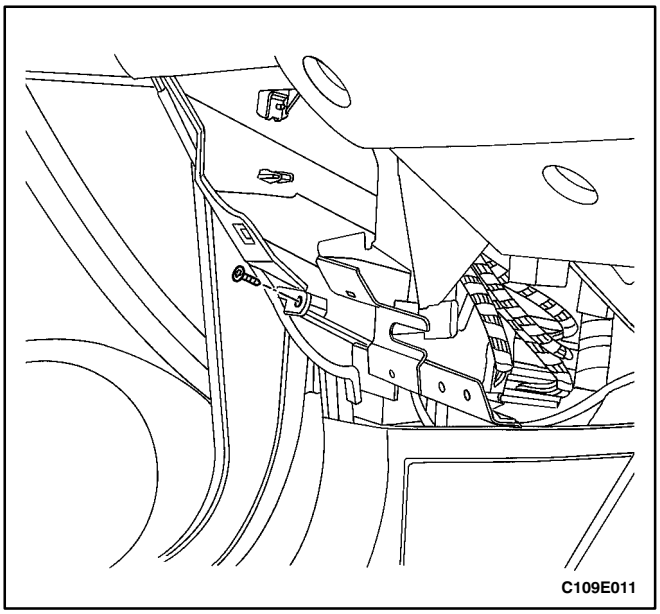

2. Connect the electrical connector.
3. Install the instrument panel side trim cover with the screw.

   Tighten

   Tighten the instrument panel side trim cover screw to 2.5 N•m (22 lb-in).

4. Install the knee bolster trim panel with the hood release handle screw.

   Tighten

   Tighten the hood release handle screw to 2.5 N•m (22 lb-in).

5. Connect the negative battery cable.

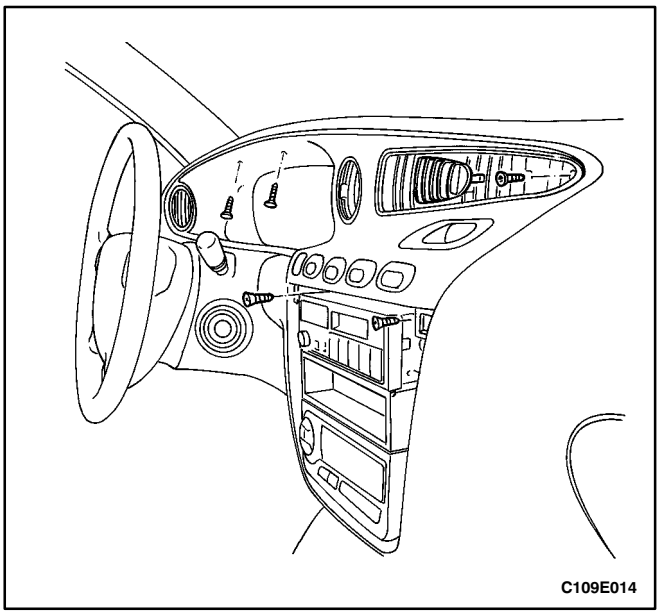

INSTRUMENT CLUSTER TRIM PANEL

(Left–Hand Drive Shown, Right–Hand Drive Similar)

Removal Procedure

1. Remove the audio system trim plate.
2. Remove the screws and the instrument cluster trim panel.
3. Disconnect the electrical connectors.

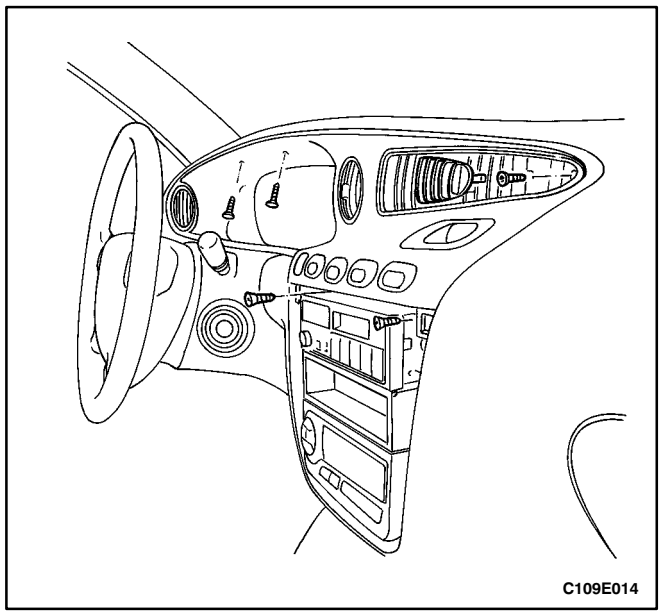

Installation Procedure

1. Connect the electrical connectors.
2. Install the instrument cluster trim panel with the screws.

Tighten

Tighten the instrument cluster trim panel screws to 3 N•m (27 lb-in).

3. Install the audio system trim plate.

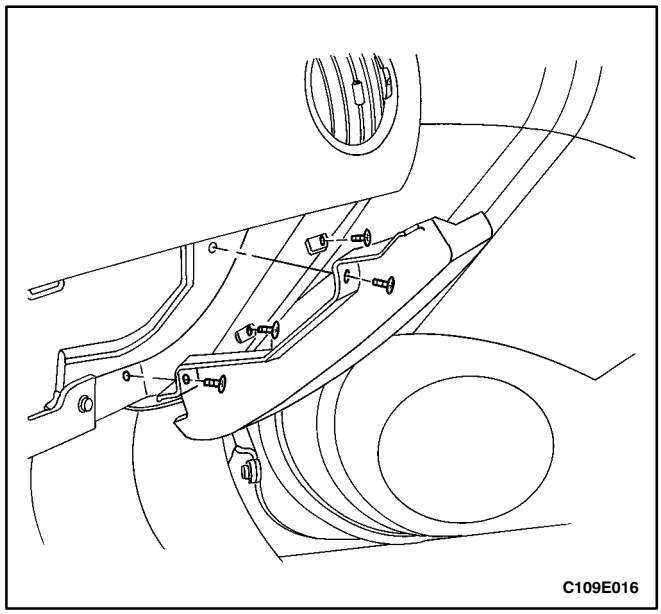

INSTRUMENT PANEL

(Left–Hand Drive Shown, Right–Hand Drive Similar)

Removal Procedure

1. Disconnect the negative battery cable.
2. Remove the floor console. Refer to *Section 9G, Interior Trim.*
3. Remove the sun sensor and the automatic temperature controls assembly. Refer to *Section 7D, Automatic Temperature Control Heating, Ventilation, and Air Conditioning System.*
4. Remove the tweeter speakers and the stereo cassette AM/FM radio. Refer to *Section 9F, Audio Systems.*
5. Remove the screws and the instrument panel storage compartment.
6. Remove the instrument cluster dimmer/headlamp leveling switch assembly. Refer to “Instrument Cluster Dimmer/Headlamp Leveling Switch” in this section.
7. Remove the instrument cluster. Refer to “Instrument Cluster” in this section.
8. Remove the chime module. Refer to “Chime Module” in this section.
9. Remove the kick panels. Refer to *Section 9G, Interior Trim.*
10. Remove the glove box. Refer to “Glove Box” in this section.
11. Remove the screws and the glove box housing.
12. Disconnect the glove box housing electrical connectors.
13. Remove the screws and the passenger side knee bolster trim panel.
14. Remove the screws and the instrument panel side trim cover.

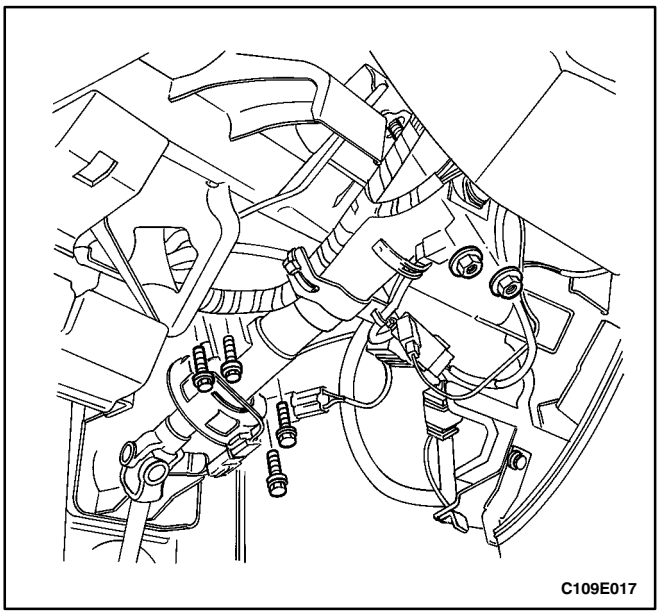

15. Remove the nuts and the bolts securing the steering column.

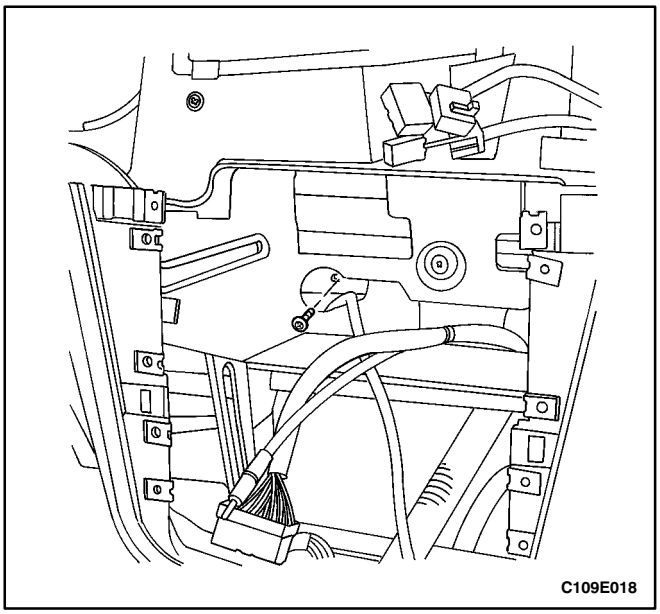

16. Disconnect the steering column electrical connectors.
17. Lower the steering column.
18. Remove the screw behind the stereo cassette AM/FM radio.

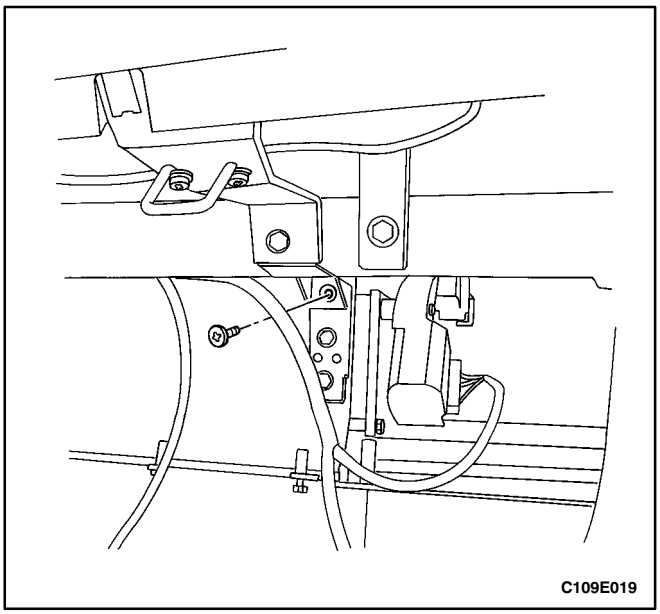

19. Remove the screw securing the instrument panel to the heater air distributor case.

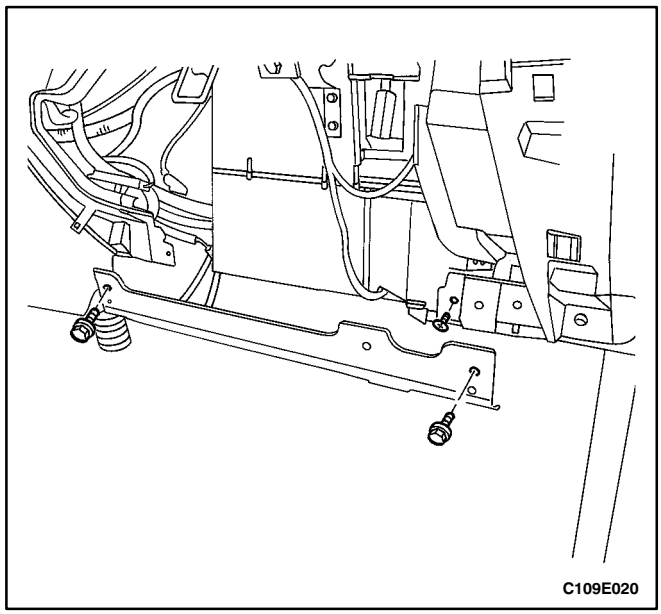

20. Remove the bolts and the glove box brace.
21. Remove the instrument panel screw behind the glove box brace.

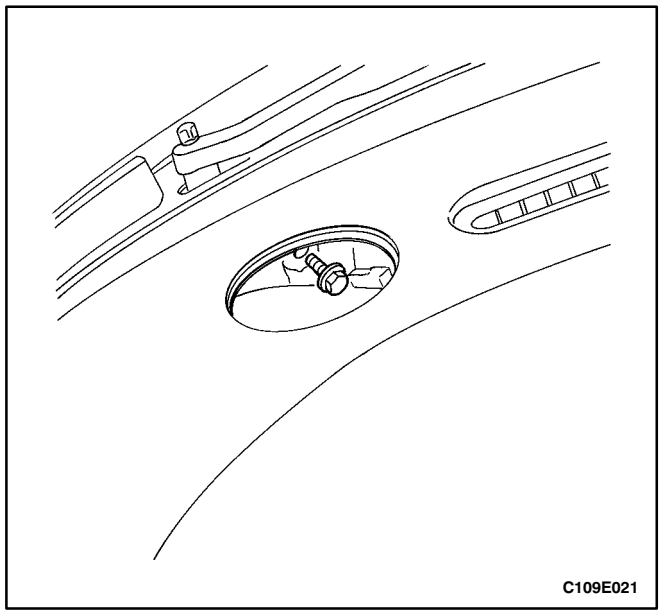

22. Remove the instrument panel bolts below the windshield.

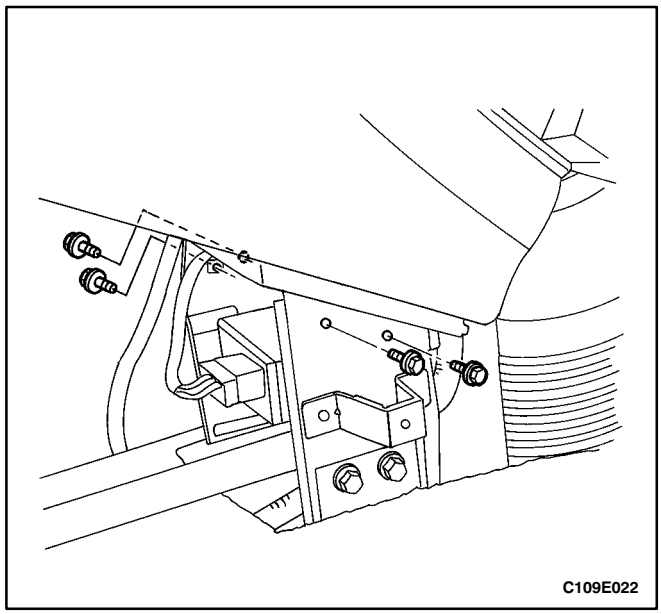

23. Remove the bolts securing the bottom of the instrument panel to the floor.

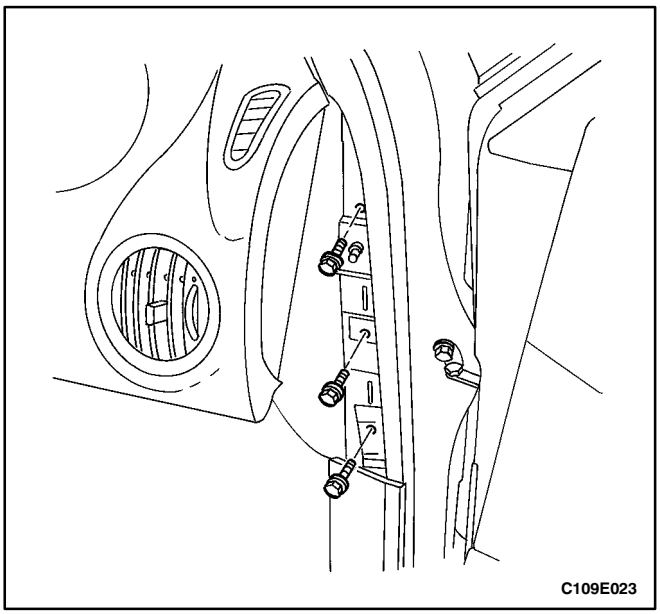

24. Remove the bolts securing the sides of the instrument panel to the body.
25. Disconnect the instrument panel electrical connectors.
26. Remove the instrument panel.

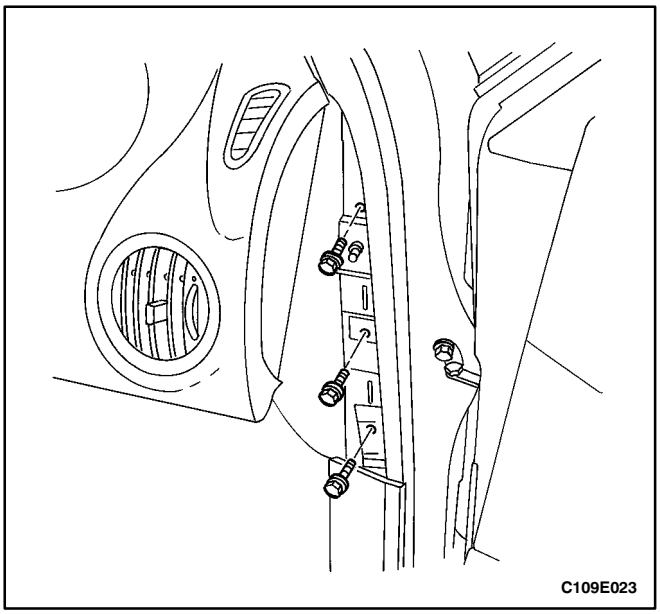

Installation Procedure

1. Position the instrument panel in the Vehicle.
2. Connect the instrument panel electrical connectors.

Notice: Dissimilar metals in direct contact with each other may corrode rapidly. Make sure to use the correct fasteners to prevent premature corrosion.

3. Install the bolts securing the sides of the instrument panel to the body.

   Tighten

   Tighten the instrument panel-to-body bolts to 22 N•m (16 lb-ft).

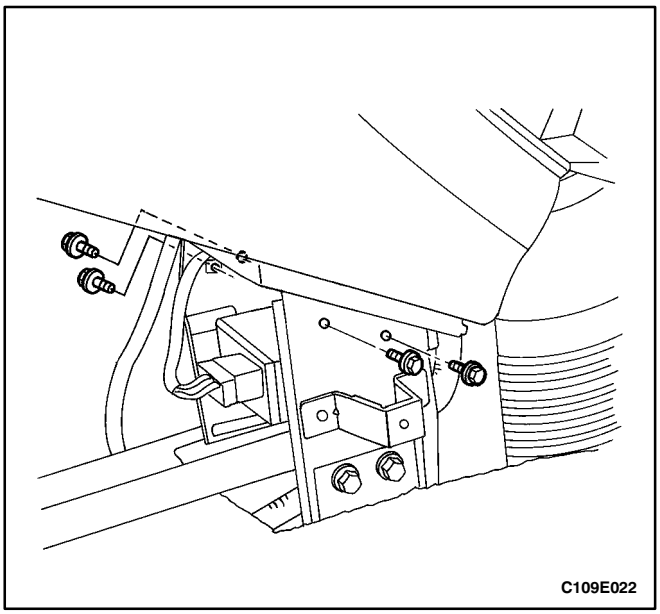

4. Install the bolts securing the bottom of the instrument panel to the floor.

   Tighten

   Tighten the instrument panel-to-floor bolts to 22 N•m (16 lb-ft).

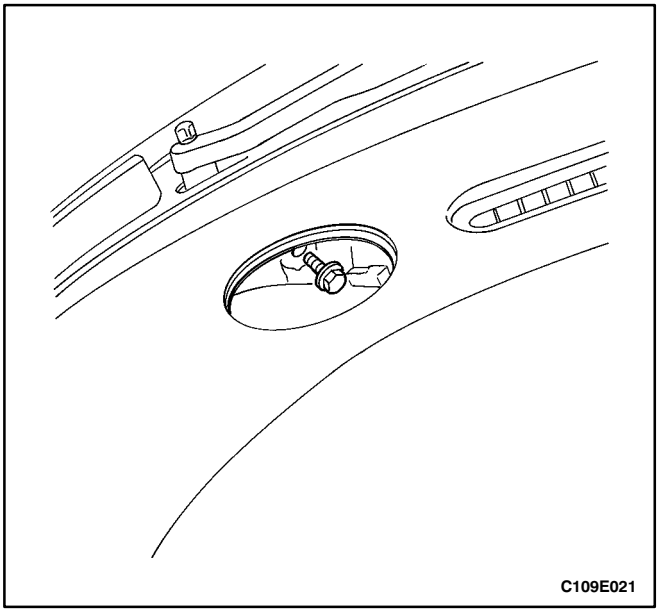

5. Install the instrument panel bolts below the windshield.

Tighten

Tighten the instrument panel bolts below the windshield to 22 N•m (16 lb-ft).

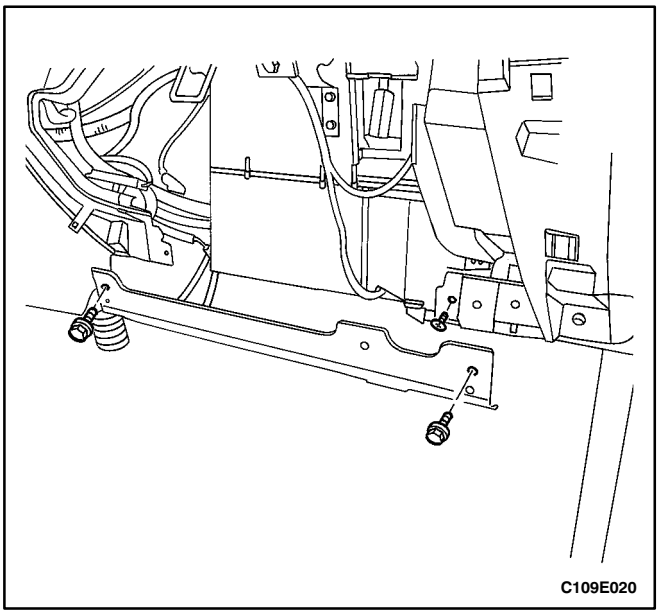

6. Install the instrument panel screw behind the glove box brace.

Tighten

Tighten the instrument panel screw behind the glove box brace to 2.5 N•m (22 lb-in).

7. Install the glove box brace with the bolts.

Tighten

Tighten the glove box brace bolts to 10 N•m (89 lb-in).

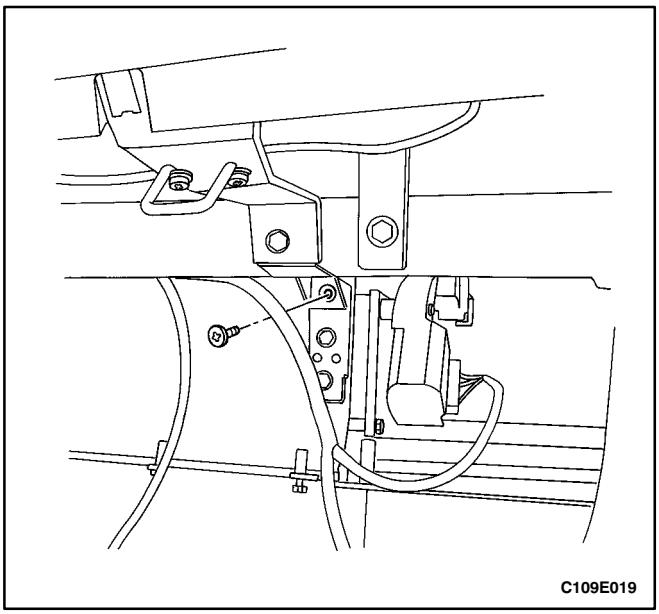

8. Install the screw securing the instrument panel to the heater air distributor case.

Tighten

Tighten the instrument panel-to-heater air distributor case screw to 4 N•m (35 lb-in).

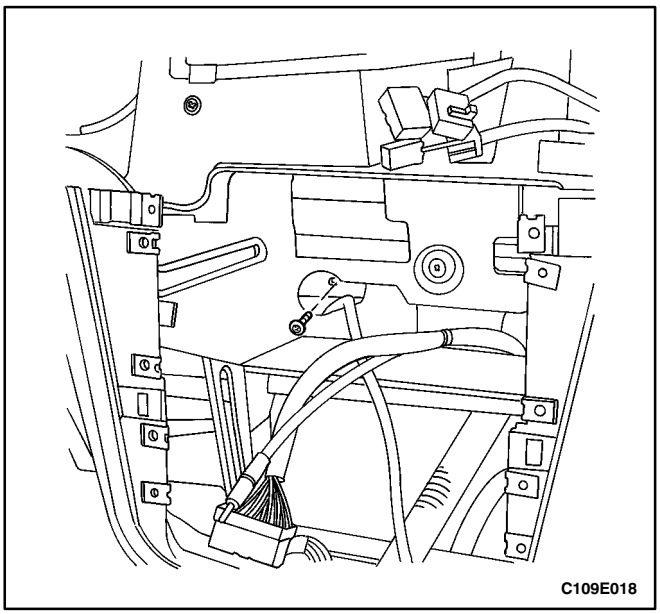

9. Install the screw behind the stereo cassette AM/FM radio.

Tighten

Tighten the instrument panel screw behind the stereo cassette AM/FM radio to 3 N•m (27 lb-in).

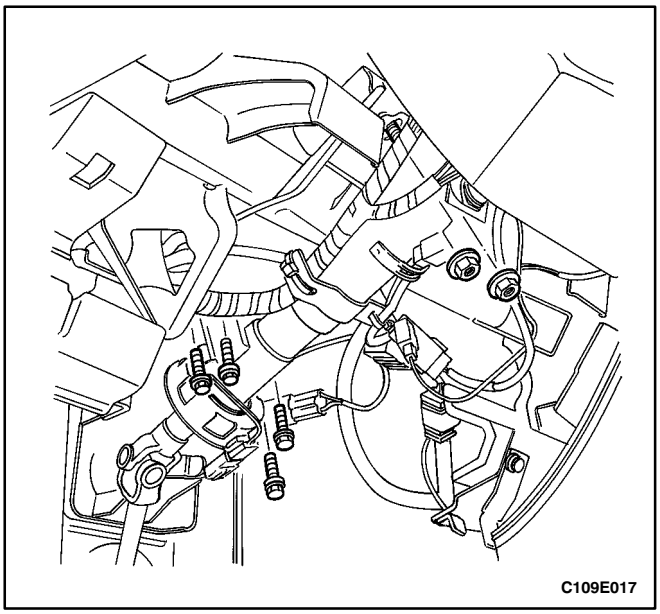

10. Raise the steering column.
11. Connect the steering column electrical connectors.
12. Install the nuts and the bolts securing the steering column.

Tighten

Tighten the steering column nuts to 22 N•m (16 lb-ft).

Tighten the steering column bolts to 22 N•m (16 lb-ft).

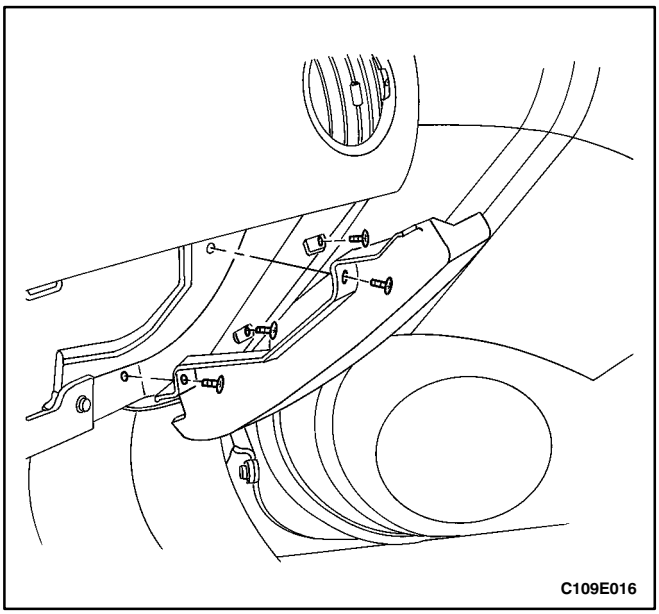

13. Install the instrument panel side trim cover with the screws.

Tighten

Tighten the instrument panel side trim cover screws to 2.5 N•m (22 lb-in).

14. Install the passenger side knee bolster trim panel with the screws.

Tighten

Tighten the passenger side knee bolster trim panel screws to 3 N•m (27 lb-in).

15. Connect the glove box housing electrical connectors.
16. Install the glove box housing with the screws.

Tighten

Tighten the glove box housing screws to 2.5 N•m (22 lb-in).

17. Install the glove box. Refer to “Glove Box” in this section.
18. Install the kick panels. Refer to *Section 9G, Interior Trim.*
19. Install the chime module. Refer to “Chime Module” in this section.
20. Install the instrument cluster. Refer to “Instrument Cluster” in this section.
21. Install the instrument cluster dimmer/headlamp leveling switch assembly. Refer to “Instrument Cluster Dimmer/Headlamp Leveling Switch” in this section.
22. Install the instrument panel storage compartment with the screws.

Tighten

Tighten the instrument panel storage compartment screws to 2.5 N•m (22 lb-in).

23. Install the tweeter speakers and the stereo cassette AM/FM radio Refer to *Section 9F, Audio Systems.*
24. Install the sun sensor and the automatic temperature controls assembly. Refer to *Section 7D, Automatic Temperature Control Heating, Ventilation, and Air Conditioning System.*
25. Install the floor console. Refer to *Section 9G, Interior Trim.*
26. Connect the negative battery cable.

GENERAL DESCRIPTION AND SYSTEM OPERATION

CIGAR LIGHTER

The cigar lighter is located in the front portion of the floor console. To use the lighter, push it in completely. When the lighter is hot, it will release itself from contact with the heating element. The lighter and the heating element can be damaged if the lighter is not allowed to fully release itself from the heating element.

ASHTRAY

The ashtray is located in the console. To access the ashtray, pull it out of the ashtray housing. The ashtray lamp will go on when the parking lamps or headlamps are turned on.

INSTRUMENT PANEL VENTS

The center and the side Vents in the instrument panel can be adjusted up and down and from side to side. The side Vents can also be aimed toward the side windows in order to defog them.

GLOVE BOX

The glove box can be opened by pulling up on the latch handle. The glove box must be removed in order to gain access to the passenger-side air bag module (if equipped).

DIGITAL CLOCK

The digital clock is located on the instrument panel above the radio. The clock is capable of an outside temperature display and a 12-hour or a 24-hour display.

INSTRUMENT CLUSTER

The instrument cluster is located above the steering column and in the instrument cluster trim panel. The instrument cluster contains the instruments that provide the driver with Vehicle performance information. The instrument cluster contains a speedometer, a tachometer, an odometer, a trip odometer, a temperature gauge, a fuel gauge and several indicator lamps. For replacement of the indicator lamp bulbs contained in the instrument cluster, refer to “Instrument Cluster Indicator Lamps Specifications” in this section.

SPEEDOMETER

The speedometer measures the speed of the Vehicle in km/h or mph (with km/h). It consists of an instrument cluster gauge connected to the Vehicle speed sensor on the transaxle output shaft.

TRIP ODOMETER

The trip odometer measures the distance the Vehicle has traveled since it was last reset. It consists of an instrument cluster gauge connected to the sending unit on the transaxle output shaft. The trip odometer can be reset to zero at any time so that the driver can record the distance traveled from any starting point.

FUEL GAUGE

The fuel gauge consists of an instrument cluster gauge connected to a sending unit in the fuel tank.

The fuel gauge indicates the quantity of fuel in the tank only when the ignition switch is turned to ON or ACC. When the ignition is turned to LOCK or START, the pointer may come to rest at any position.

TEMPERATURE GAUGE

The temperature gauge consists of an instrument cluster gauge connected to a temperature sensor that is in contact with the circulating engine coolant.

The temperature gauge indicates the temperature of the coolant. Prolonged driving or idling in Very hot weather may cause the pointer to move beyond the center of the gauge. The engine is overheating if the pointer moves into the red zone at the upper limit of the gauge.

INSTRUMENT CLUSTER INDICATOR LAMPS

The instrument cluster contains indicator lamps that indicate the functioning of certain systems or the existence of potential problems with the operation of the Vehicle. The indicator lamps are replaceable. For replacement of the indicator lamps contained in the instrument cluster, refer to “Instrument Cluster Indicator Lamps Specifications” in this section.

TACHOMETER

The tachometer measures the engine’s speed in terms of thousands of revolutions per minute. It consists of an instrument cluster gauge connected to a sending unit in the engine control module.

Do not operate the engine in the red zone; otherwise, engine damage may occur.

CHIME MODULE

The chime module will sound in order to bring attention to one or more of several conditions. The following conditions will cause the chime to sound.

- The lights are on and the ignition switch is not in ACC, ON, or START.
- The ignition key is in the ignition switch when the driver’s door is open.
- The seat belt is unbuckled when the ignition switch is in ACC, ON, or START.
- The Vehicle speed exceeds 120 km/h (75 mph).

Voltage is supplied at all times through the fuse block to power the chime module.

SECTION 9F

AUDIO SYSTEMS

CAUTION: Disconnect the negative battery cable before removing or installing any electrical unit or when a tool or equipment could easily come in contact with exposed electrical terminals. Disconnecting this cable will help prevent personal injury and damage to the vehicle. The ignition must also be in LOCK unless otherwise noted.

TABLE OF CONTENTS

Specifications 9F-1
Fastener Tightening Specifications 9F-1
Schematic and Routing Diagrams 9F-2
Audio System Circuit 9F-2
Diagnosis 9F-3
Stereo Cassette AM/FM Radio 9F-3
Speakers 9F-5
Antenna 9F-6
Maintenance and Repair 9F-7
On-Vehicle Service 9F-7
Stereo Cassette AM/FM Radio 9F-7
CD Changer 9F-7
Front Door Speakers 9F-8
Tweeter Speakers 9F-9
Rear Speakers 9F-9
Power Antenna Mast 9F-10
Power Antenna Motor/Manual Antenna 9F-11
General Description and System Operation 9F-13
Stereo Cassette AM/FM Radio 9F-13
Audio Security System 9F-13
Front and Rear Speakers 9F-13
Tweeter Speakers 9F-13
Manual Antenna 9F-13
Power Antenna 9F-13
Tape Player and Cassette Care 9F-13
Compact Disc Care 9F-13

SPECIFICATIONS

FASTENER TIGHTENING SPECIFICATIONS

Application	N•m	Lb-Ft	Lb-In
Antenna Cap Nut	2.5	–	22
Antenna Motor Nuts	4	–	35
Audio System Screws	4	–	35
Front Door Speaker Screws	4	–	35
Rear Speaker Screws	2	–	18

SCHEMATIC AND ROUTING DIAGRAMS

AUDIO SYSTEM CIRCUIT

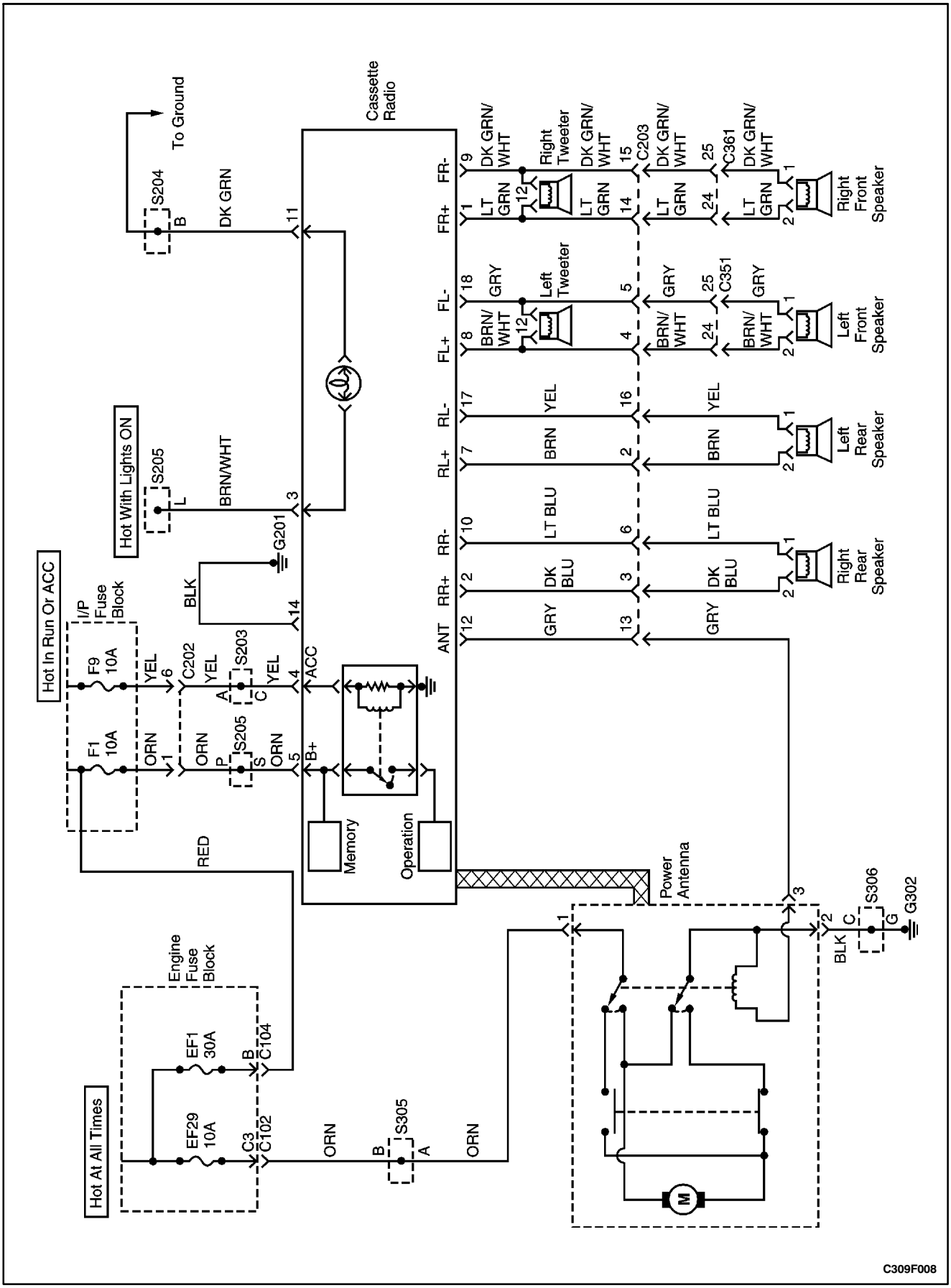

DIAGNOSIS

STEREO CASSETTE AM/FM RADIO

AM/FM Cassette Radio Inoperative

Step	Action	Value	Yes	No
1	Check fuses EF1, F1, and F9. Are fuses EF1, F1, and F9 blown?	–	Go to *Step 2*	Go to *Step 3*
2	1. Check for a short circuit and repair if necessary. 2. Replace the blown fuses. Is the repair complete?	–	System OK	–
3	1. Use a voltmeter to test for battery voltage at fuses EF1 and F9. 2. Turn the ignition ON and test for battery voltage at fuse F1. Does the voltage match the specified value at fuses EF1, F1, and F9?	11-14 V	Go to *Step 5*	Go to *Step 4*
4	Repair the power supply circuit to the fuses. Is the repair complete?	–	System OK	–
5	1. Remove the cassette radio. 2. Turn the ignition ON. 3. Use a voltmeter to test for battery voltage at the audio system connector terminals 4 and 5. Does the battery voltage match the specified value at both terminals?	11-14 V	Go to *Step 7*	Go to *Step 6*
6	Repair the open circuit between the audio system connector and the fuse. Is the repair complete?	–	System OK	–
7	Use an ohmmeter to test the ground circuit at the audio system connector terminal 14. Does the resistance match the specified value?	≈0 Ω	Go to *Step 9*	Go to *Step 8*
8	Repair the open ground circuit between the audio system connector and ground. Is the repair complete?	–	System OK	–
9	Replace the audio system. Is the repair complete?	–	System OK	–

Cassette Player Inoperative, AM/FM Functions OK

Step	Action	Value	Yes	No
1	Verify the customer's complaint. Does the cassette player destroy tapes?	–	Go to *Step 5*	Go to *Step 2*
2	Using a good-quality tape, determine whether the cassette player performs poorly or is inoperative. Does the cassette player perform poorly?	–	Go to *Step 5*	Go to *Step 3*
3	Check the cassette player for obstructions behind the tape door. Is an obstruction found?	–	Go to *Step 4*	Go to *Step 8*
4	Check to see if the obstruction can be removed using gentle force. Is the obstruction removed?	–	Go to *Step 5*	Go to *Step 6*

Cassette Player Inoperative, AM/FM Functions OK (Cont'd)

Step	Action	Value	Yes	No
5	Clean the cassette player head, the capstan, and the drive system. Does the tape play properly?	–	Go to *Step 7*	Go to *Step 6*
6	Replace the audio system. Is the repair complete?	–	System OK	–
7	Check the cassette player for normal operation. Is the repair complete?	–	System OK	–
8	Advise the owner of a defective or worn tape. Is the repair complete?	–	System OK	–

FM Does Not Work, AM and Cassette OK

Step	Action	Value	Yes	No
1	Check the audio system for normal operation. Is FM inoperative and the rest of the system operating properly?	–	Go to *Step 2*	System OK
2	Replace the radio. Is the repair complete?	–	System OK	–

AM Radio Does Not Work, FM and Cassette OK

Step	Action	Value	Yes	No
1	1. Unplug the antenna cable from the antenna. 2. Connect the test antenna to the antenna cable. 3. Check the AM radio reception. Is the AM radio operating properly?	–	Go to *Step 2*	Go to *Step 3*
2	Replace the antenna. Is the repair complete?	–	System OK	–
3	1. Remove the audio system from the instrument panel. 2. Unplug the antenna cable from the audio system. 3. Plug the test antenna into the audio system. 4. Check the AM radio reception. Is the AM radio operating properly?	–	Go to *Step 4*	Go to *Step 5*
4	Replace the antenna cable between the audio system and the antenna. Is the repair complete?	–	System OK	–
5	Replace the audio system. Is the repair complete?	–	System OK	–

SPEAKERS

Front Speakers Distorted or Inoperative, Rest of Audio System OK

Step	Action	Value	Yes	No
1	1. Turn the ignition and the radio ON. 2. Check for distorted or inoperative front speakers using the fader and the balance controls with all of the sources (AM, FM, tape, CD). Are the front speakers distorted?	–	Go to *Step 2*	Go to *Step 4*
2	Check the speaker and the door area for damage, rattles, or vibration. Is the distortion caused by anything loose or in the way of the speaker?	–	Go to *Step 3*	Go to *Step 4*
3	Make the necessary repairs to secure the component causing the distortion. Is the repair complete?	–	System OK	–
4	1. Remove the front speakers and disconnect the speaker connector. 2. Using an ohmmeter, test the speaker wires for a short to ground. Does the ohmmeter show the specified value?	∞	Go to *Step 6*	Go to *Step 5*
5	Repair the short circuit between the front speaker connector and the radio connector. Is the repair complete?	–	System OK	–
6	Substitute a known good speaker for the speaker causing the distortion. Is the distortion eliminated?	–	Go to *Step 7*	Go to *Step 8*
7	Replace the speaker. Is the repair complete?	–	System OK	–
8	Replace the audio system. Is the repair complete?	–	System OK	–

Rear Speakers Distorted or Inoperative, Rest of Audio System OK

Step	Action	Value	Yes	No
1	1. Turn the ignition and the radio ON. 2. Check for distorted or inoperative rear speakers using the fader and the balance controls with all the of the sources (AM, FM, tape, CD). Are the rear speakers distorted?	–	Go to *Step 2*	Go to *Step 4*
2	Check the speakers, the rear deck, and the trunk area for damage, rattles, or vibration. Is the distortion caused by anything loose or in the way of the speaker?	–	Go to *Step 3*	Go to *Step 4*
3	Make the necessary repairs to secure the component causing the distortion. Is the repair complete?	–	System OK	–
4	1. Disconnect the rear speakers. 2. Using an ohmmeter, test the speaker wires for a short to ground. Does the ohmmeter show the specified value?	∞	Go to *Step 6*	Go to *Step 5*
5	Repair the short circuit between the rear speaker connector and the radio connector. Is the repair complete?	–	System OK	–

Rear Speakers Distorted or Inoperative, Rest of Audio System OK (Cont'd)

Step	Action	Value	Yes	No
6	Substitute a known good speaker for the speaker causing the distortion. Is the distortion eliminated?	–	Go to *Step 7*	Go to *Step 8*
7	Replace the speaker. Is the repair complete?	–	System OK	–
8	Replace the audio system. Is the repair complete?	–	System OK	–

ANTENNA

Power Antenna Does Not Work

Step	Action	Value	Yes	No
1	Check fuse EF29. Is fuse EF29 blown?	–	Go to *Step 2*	Go to *Step 3*
2	1. Check for a short circuit and repair if necessary. 2. Replace the blown fuse. Is the repair complete?	–	System OK	–
3	Use a voltmeter to test for battery voltage at fuse EF29. Does the battery voltage match the specified value?	11-14 V	Go to *Step 5*	Go to *Step 4*
4	Repair the open power supply circuit to fuse EF29. Is the repair complete?	–	System OK	–
5	Use a voltmeter to test for battery voltage at power antenna connector terminal 1. Does the battery voltage match the specified value?	11-14 V	Go to *Step 7*	Go to *Step 6*
6	Repair the open circuit between the power antenna connector terminal 1 and fuse EF29. Is the repair complete?	–	System OK	–
7	Use an ohmmeter to test the ground circuit at the power antenna connector terminal 2. Does the resistance match the specified value?	≈0 Ω	Go to *Step 9*	Go to *Step 8*
8	Repair the open ground circuit between the power antenna connector terminal 2 and ground. Is the repair complete?	–	System OK	–
9	1. Turn the ignition ON. 2. Turn the radio ON. 3. Use a voltmeter to test for battery voltage at the power antenna connector terminal 2. Does the voltage match the specified value?	11-14 V	Go to *Step 10*	Go to *Step 11*
10	Replace the power antenna. Is the repair complete?	–	System OK	–
11	1. Turn the ignition ON. 2. Turn the radio ON. 3. Use a voltmeter to test for battery voltage at radio terminal 12. Does the battery voltage match the specified value?	11-14 V	Go to *Step 12*	Go to *Step 13*
12	Repair the open circuit between the radio connector and the power antenna connector terminal 3. Is the repair complete?	–	System OK	–
13	Replace the audio system. Is the repair complete?	–	System OK	–

MAINTENANCE AND REPAIR

ON-VEHICLE SERVICE

STEREO CASSETTE AM/FM RADIO

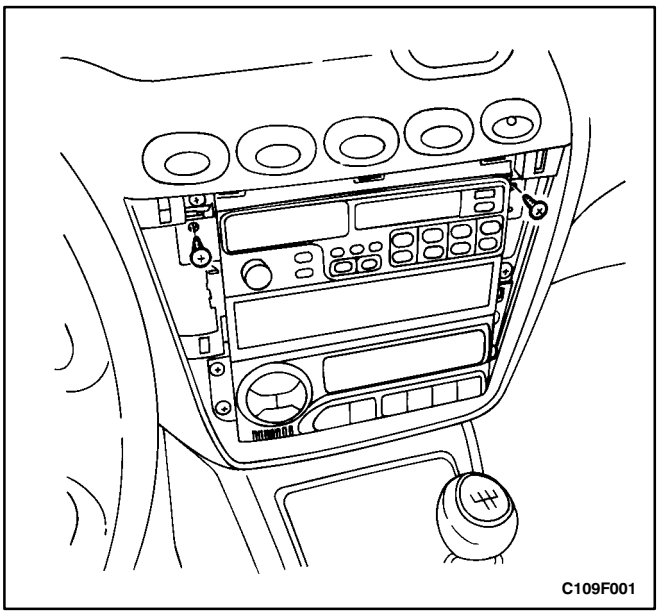

Removal Procedure

1. Disconnect the negative battery cable.
2. Remove the audio system trim plate.
3. Remove the screws and the audio system.
4. Disconnect the audio system electrical connectors.

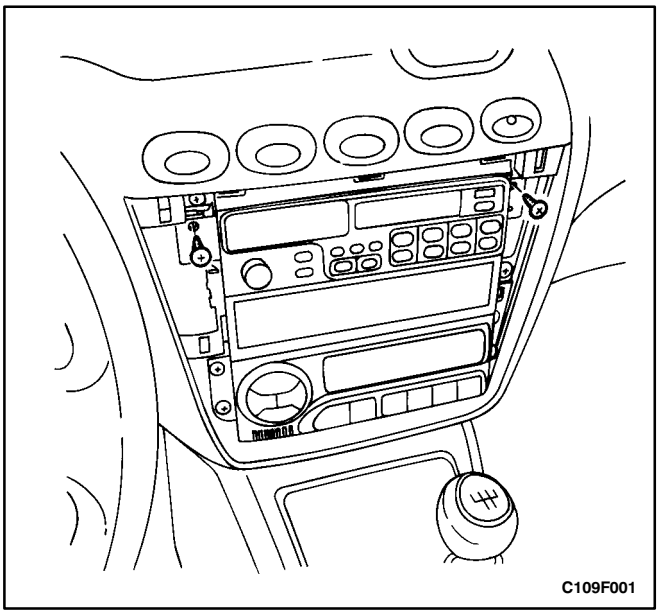

Installation Procedure

1. Connect the audio system electrical connectors.

Notice: Dissimilar metals in direct contact with each other may corrode rapidly. Make sure to use the correct fasteners to prevent premature corrosion.

2. Install the audio system with the screws.

   Tighten

   Tighten the audio system screws to 4 N•m (35 lb-in).
3. Install the audio system trim plate.
4. Connect the negative battery cable.

CD CHANGER

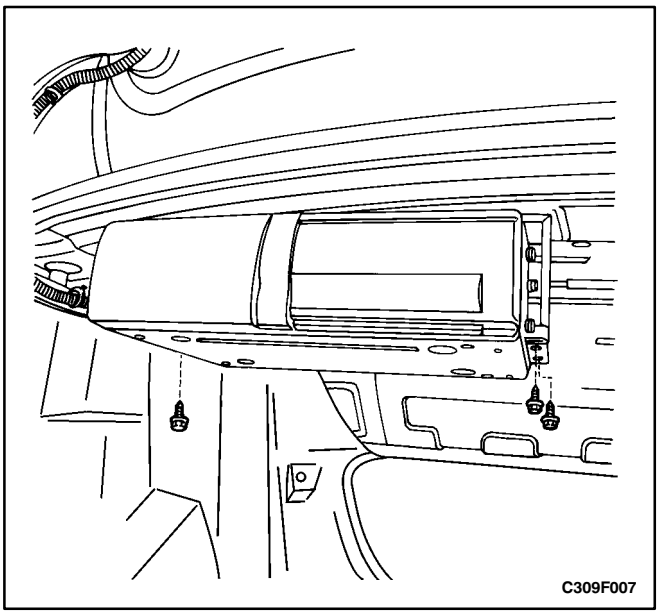

Removal Procedure

1. Disconnect the negative battery cable.
2. Disconnect the CD changer electrical connector.
3. Remove the bolts and the CD changer from the CD changer bracket.

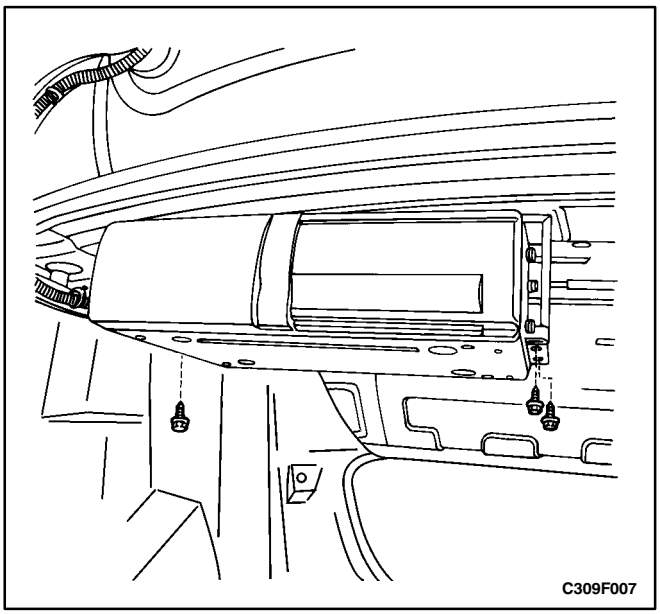

Installation Procedure

1. Install the CD changer with the bolts.
2. Connect the CD changer electrical connector.
3. Connect the negative battery cable.

FRONT DOOR SPEAKERS

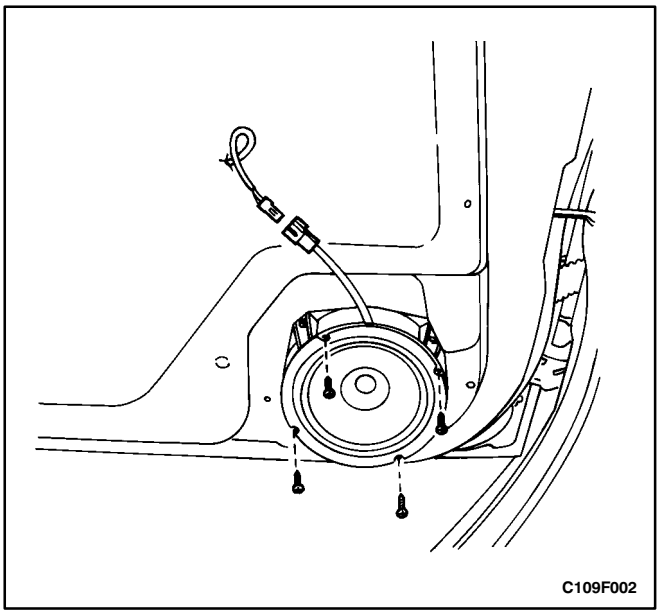

Removal Procedure

1. Disconnect the negative battery cable.
2. Remove the front door trim panel. Refer to *Section 9G, Interior Trim*.
3. Disconnect the electrical connector.
4. Remove the screws and the front door speaker.

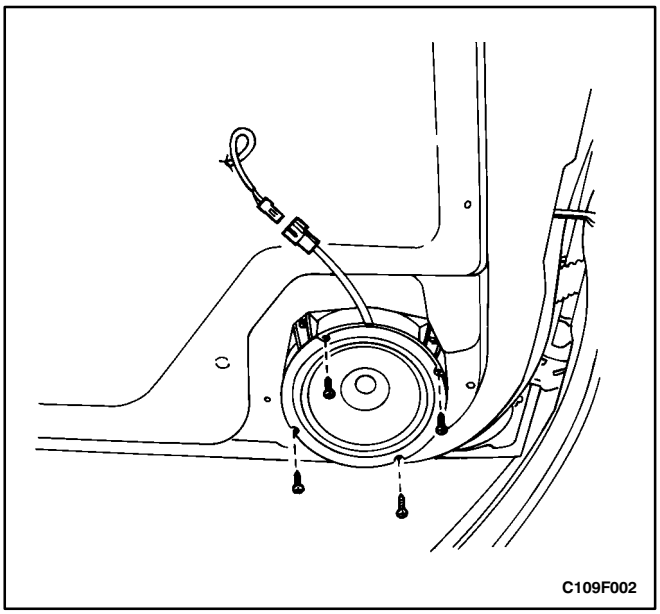

Installation Procedure

Notice: Dissimilar metals in direct contact with each other may corrode rapidly. Make sure to use the correct fasteners to prevent premature corrosion.

1. Install the front door speaker with the screws.

   Tighten

   Tighten the front door speaker screws to 4 N•m (35 lb-in).
2. Connect the electrical connector.
3. Install the front door trim panel. Refer to *Section 9G, Interior Trim*.
4. Connect the negative battery cable.

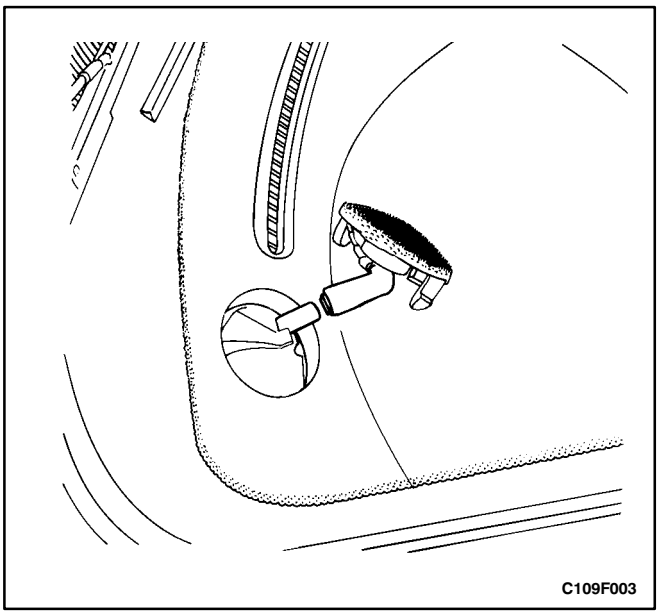

TWEETER SPEAKERS

Removal Procedure

1. Disconnect the negative battery cable.
2. Remove the tweeter speaker by prying the tweeter speaker out of the instrument panel.
3. Disconnect the electrical connector.

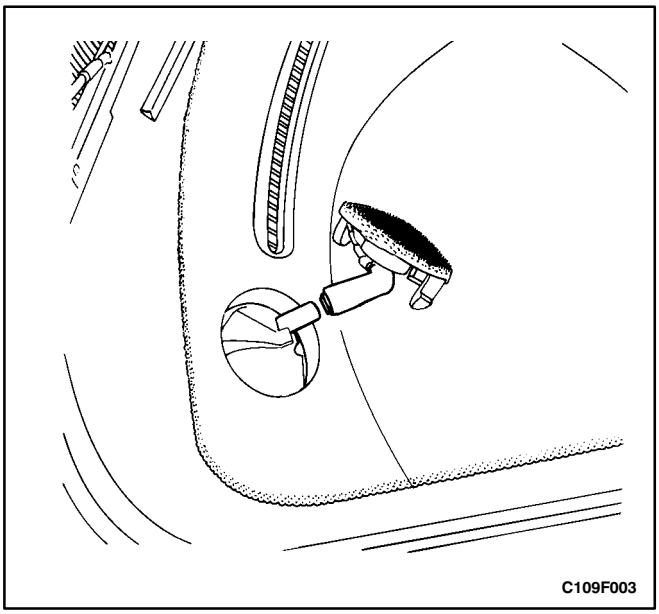

Installation Procedure

1. Connect the electrical connector.
2. Install the tweeter speaker into the instrument panel.
3. Connect the negative battery cable.

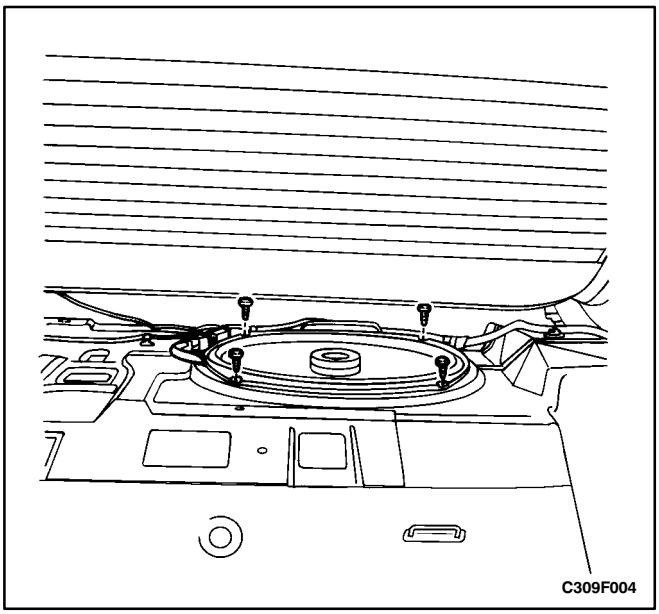

REAR SPEAKERS

Removal Procedure

1. Disconnect the negative battery cable.
2. Remove the deck lid sill plate cover. Refer to *Section 9G, Interior Trim*.
3. Disconnect the electrical connector.
4. Remove the screws and the rear speakers.

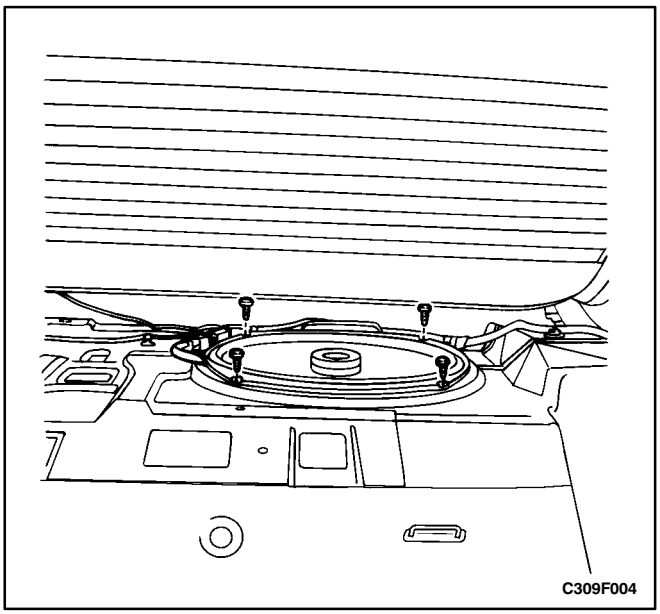

Installation Procedure

Notice: Dissimilar metals in direct contact with each other may corrode rapidly. Make sure to use the correct fasteners to prevent premature corrosion.

1. Install the rear speakers with the screws.

   Tighten

   Tighten the rear speaker screws to 2 N•m (18 lb-in).
2. Connect the electrical connector.
3. Install the deck lid sill plate cover. Refer to *Section 9G, Interior Trim*.
4. Connect the negative battery cable.

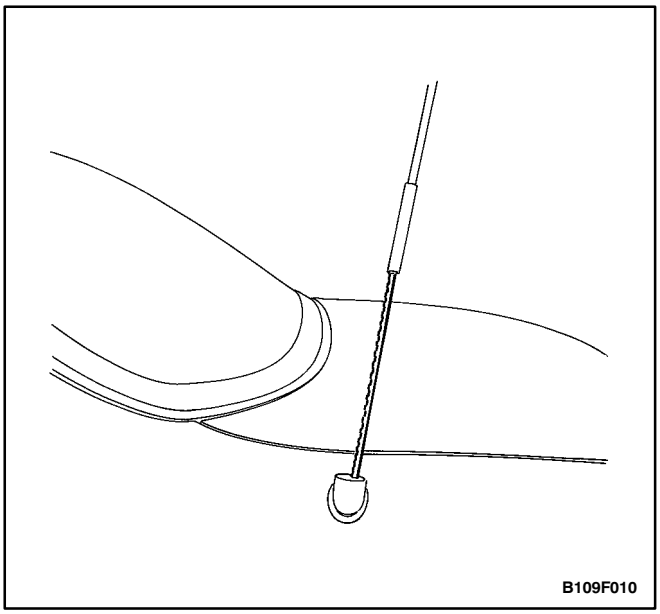

POWER ANTENNA MAST

Removal Procedure

1. Remove the antenna cap nut and the rubber grommet.
2. Turn on the radio and remove the antenna mast and the cable.
3. Turn off the radio.

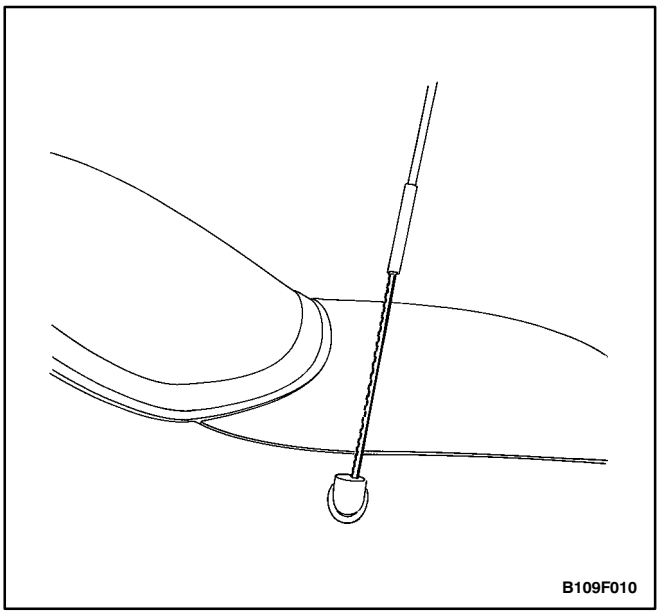

Installation Procedure

1. Install the antenna mast with the teeth of the cable facing the front of the vehicle.
2. Install the rubber grommet and the antenna cap nut.

   Tighten

   Tighten the antenna cap nut to 2.5 N•m (22 lb-in).

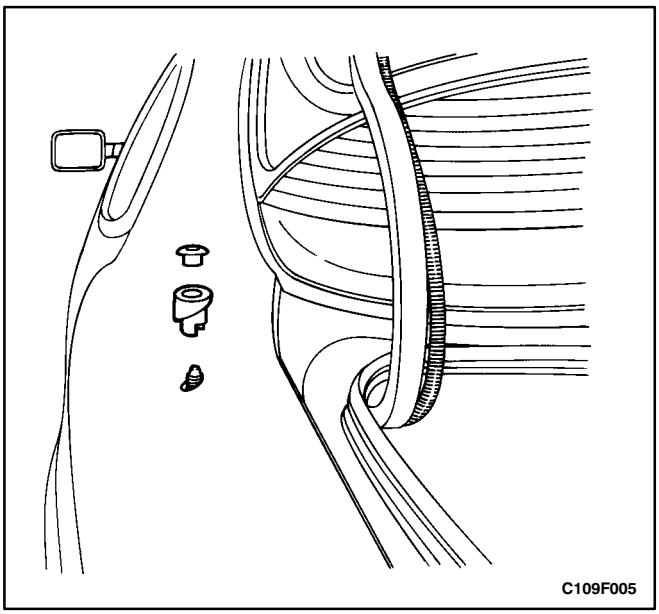

POWER ANTENNA MOTOR/MANUAL ANTENNA

Removal Procedure

1. Disconnect the negative battery cable.
2. Remove the luggage compartment wheelhouse trim panel. Refer to *Section 9G, Interior Trim*.
3. Remove the antenna cap nut and the rubber grommet.

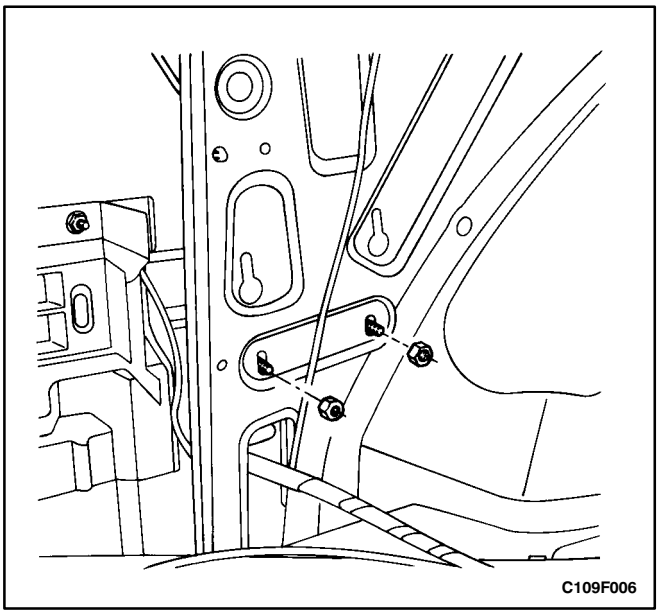

4. Disconnect the electrical connector and the drain hose from the antenna motor.
5. Remove the nuts and the antenna motor (if equipped). (Power antenna shown, manual antenna similar.)

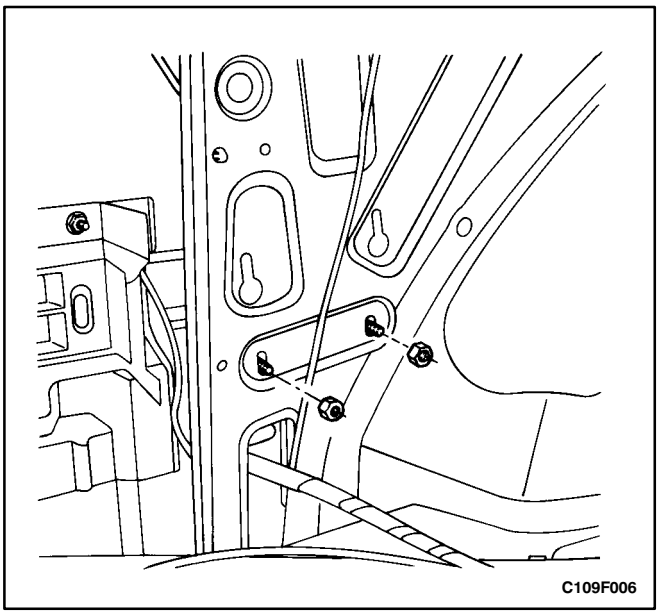

Installation Procedure

1. Connect the electrical connector and the drain hose to the antenna motor (if equipped).

Notice: Dissimilar metals in direct contact with each other may corrode rapidly. Make sure to use the correct fasteners to prevent premature corrosion.

2. Install the antenna motor with the nuts.

Tighten

Tighten the antenna motor nuts to 4 N•m (35 lb-in). (Power antenna shown, manual antenna similar.)

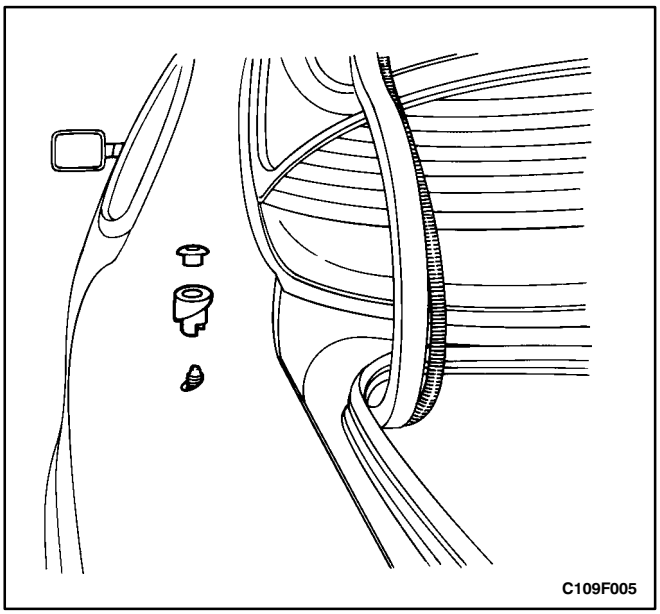

3. Install the rubber grommet and the antenna cap nut.

   Tighten

   Tighten the antenna cap nut to 2.5 N•m (22 lb-in).
4. Install the luggage compartment wheelhouse trim panel. Refer to *Section 9G, Interior Trim*.
5. Connect the negative battery cable.

GENERAL DESCRIPTION AND SYSTEM OPERATION

STEREO CASSETTE AM/FM RADIO

There are two audio systems offered. The stereo digital logic cassette AM/FM radio with electronic tape ejection, and the stereo digital logic cassette AM/FM radio with a CD changer located in the trunk are optional equipment.

AUDIO SECURITY SYSTEM

The audio system features a double security system. First, the audio security system features a detachable face to the cassette radio. When the face is removed from the cassette radio, the audio system is rendered inoperative. The audio system cannot be operated until the original face is reinstalled or a new face is installed and the proper four-digit security code is entered.

Second, the audio security system is activated whenever the audio system circuit is disconnected from the battery. A four-digit security code must be entered in order for the audio system to be functional once again. The security code is stamped on a card located in the vehicle (usually in the glove box).

Entering The Four Digit Security Code

1. With the ignition switch in the ACC or ON position, turn the radio on. At this time, CODE will appear on the radio display.
2. Press the 1 preset button until the correct first digit is shown on the display.
3. Repeat Step 2 using preset buttons 2, 3, and 4 until the four-digit security code is entered.
4. After entering the correct four-digit security code, press the AST button. CODE OK will briefly appear on the radio display. The system is now ready for operation.

Wrong Code

If the wrong code is entered, ERROR 1 will appear on the display. After the ERROR message, CODE will appear once again and the correct security code can be entered. With each new coding attempt, the length of time the ERROR mesage is displayed is doubled. A total of 10 coding attempts can be made.

FRONT AND REAR SPEAKERS

All audio systems use four speakers: two speakers mounted in the front doors and two speakers mounted in the rear deck lid sill plate. A coaxial two-way rear speaker is offered as an option.

TWEETER SPEAKERS

The tweeter speakers are mounted on the top side of the instrument panel.

MANUAL ANTENNA

The manual antenna is designed to withstand most car washes without damage. The antenna can be adjusted up or down by hand. If the mast becomes slightly bent, it can be straightened by hand. The manual antenna can be replaced if it is severely bent. Manual antennas must be kept clean for good performance.

POWER ANTENNA

The power antenna is controlled by the radio. When the radio power is turned on, the antenna is extended. When the radio is turned off, either by turning the power off or by turning the ignition switch off, the antenna is retracted.

TAPE PLAYER AND CASSETTE CARE

The head and the capstan are the two parts of the tape player that should be cleaned. This service should be performed every 100 hours of cassette operation.

In order to clean the head and the capstan, use a cotton swab dipped in rubbing alcohol.

A cassette cleaning kit may also be used to clean the head and the capstan. Follow the cleaning kit instructions to clean the tape player.

Do not touch the tape head with magnetized tools. If the head becomes magnetized, it will degrade cassettes played in the player. No service is performed on the cassettes. The cassette manufacturer handles warranties of the cassettes. Store cassettes away from extreme heat and direct sunlight.

COMPACT DISC CARE

Handle discs carefully. Store the discs in protective cases away from the sun, heat, and dust. If the surface is soiled, dampen a clean, soft cloth in a solution of mild neutral detergent and wipe the disc clean. Minidiscs (about 3 inches in diameter), will not eject and should not be used.

SECTION 9G

INTERIOR TRIM

CAUTION: Disconnect the negative battery cable before removing or installing any electrical unit or when a tool or equipment could easily come in contact with exposed electrical terminals. Disconnecting this cable will help prevent personal injury and damage to the vehicle. The ignition must also be in LOCK unless otherwise noted.

TABLE OF CONTENTS

Specifications 9G-1
Fastener Tightening Specifications 9G-1
Special Tools 9G-2
Special Tools Table 9G-2
Maintenance and Repair 9G-3
On-Vehicle Service 9G-3
Front Door Trim Panel 9G-3
Rear Door Trim Panel 9G-4
A-Pillar Trim Panel 9G-6
Upper B-Pillar Trim Panel 9G-7
Lower B-Pillar Trim Panel 9G-8
C-Pillar Trim Panel 9G-9
Deck Lid Sill Plate Cover 9G-10
Kick Panel 9G-11
Front Rocker Trim Panel 9G-11
Rear Rocker Trim Panel 9G-12
Floor Console 9G-13
Cupholder 9G-15
Floor Carpet 9G-16
Luggage Compartment Wheelhouse Trim Panel 9G-18
Luggage Compartment Rear Trim Panel 9G-19
General Description and System Operation 9G-20
Interior Trim Panels 9G-20
Pressure Relief Vent 9G-20
Floor Console 9G-20
Floor Carpet 9G-20

SPECIFICATIONS

FASTENER TIGHTENING SPECIFICATIONS

Application	N•m	Lb-Ft	Lb-In
Console-to-Parking Brake Assembly Screw	4	–	35
Cupholder Screw	2.5	–	22
Door Trim Panel Screws	2.5	–	22
Floor Console Screws	2.5	–	22
Gearshift Housing Bolts	7	–	62
Seat Belt Anchor Bolt	37	27	–

SPECIAL TOOLS

SPECIAL TOOLS TABLE

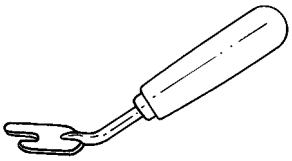 A109G029	**KM-475-B Trim Remover**

MAINTENANCE AND REPAIR

ON-VEHICLE SERVICE

FRONT DOOR TRIM PANEL

(Left–Hand Drive Shown, Right–Hand Drive Similar)

Tools Required

KM-475-B Trim Remover

Removal Procedure

1. Lower the front window.
2. Pry off the inside door handle trim bezel.
3. Remove the door trim panel screws.

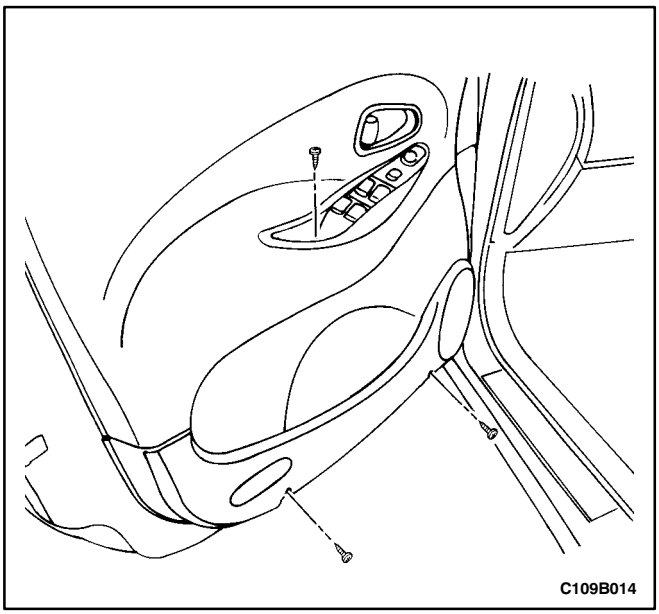

4. Remove the power window/mirror control switch.
5. Disconnect the power window/mirror control switch electrical connectors.

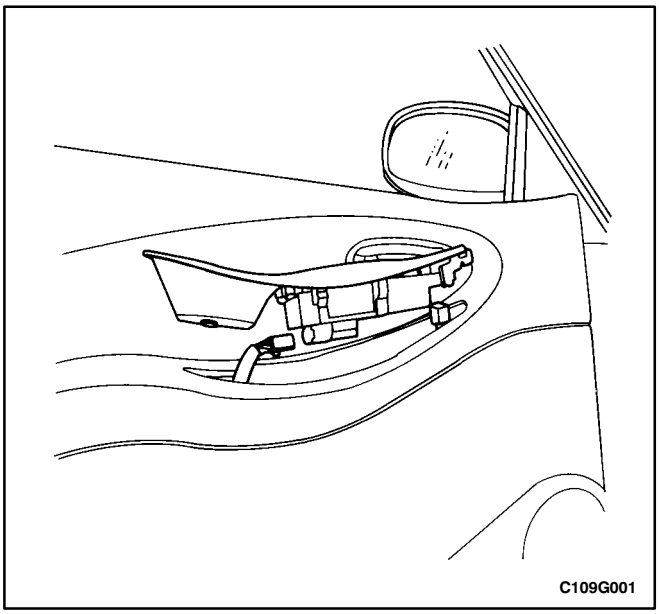

6. Pry off the trim panel using the trim remover KM-475-B.
7. Remove the door step lamp.

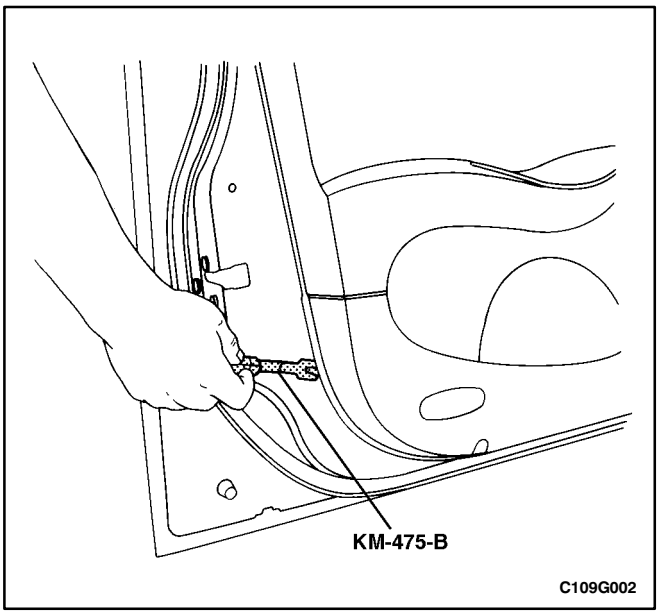

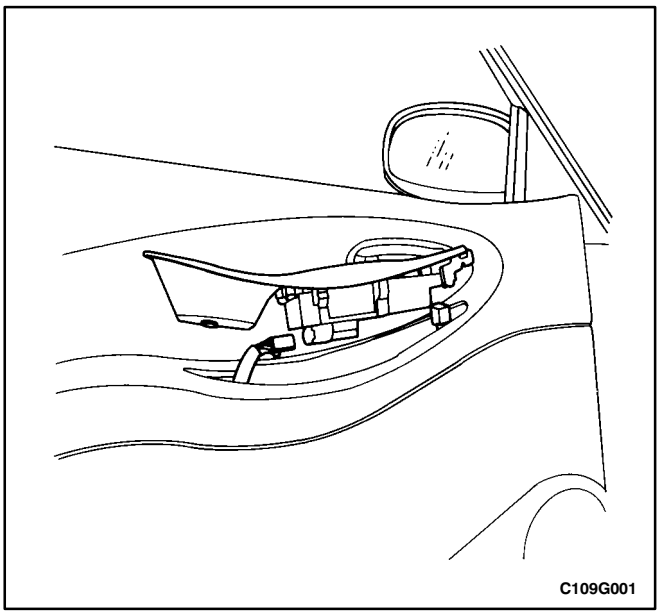

Installation Procedure

1. Install the door step lamp.
2. Install the trim panel.
3. Connect the power window/mirror control electrical connectors.
4. Install the power window/mirror control switch.

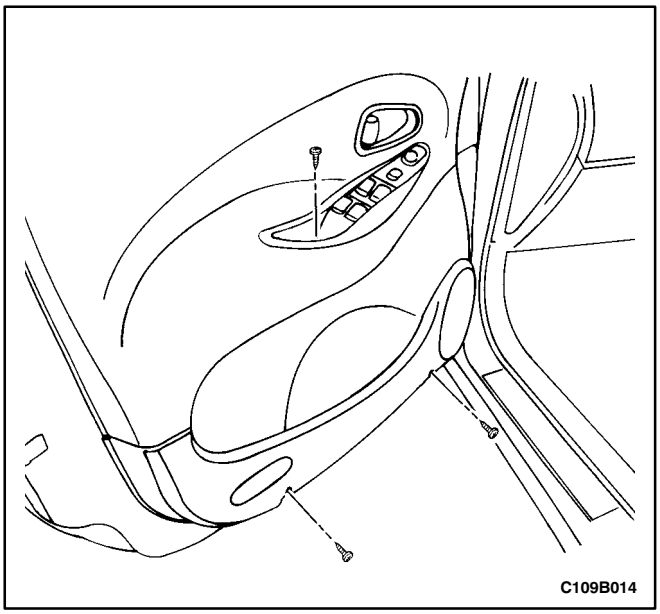

5. Install the door trim panel screws.

   Tighten

   Tighten the door trim panel screws to 2.5 N•m (22 lb-in).
6. Install the inside door handle trim bezel.
7. Raise the front window.

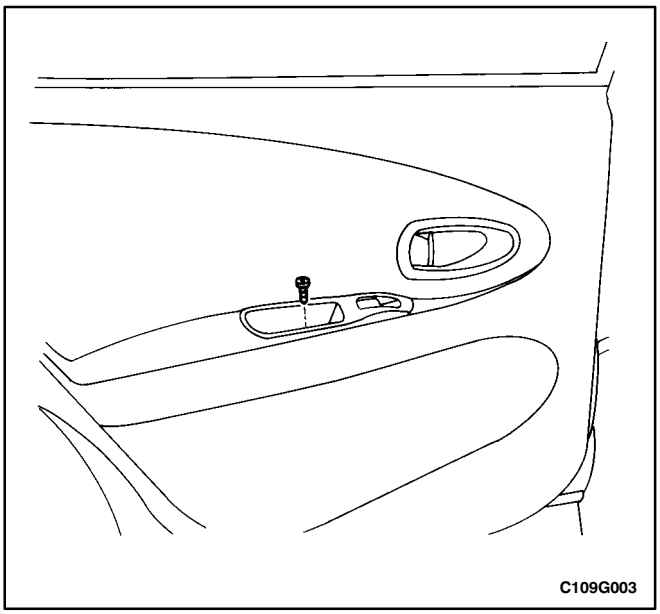

REAR DOOR TRIM PANEL

Tools Required

KM-475-B Trim Remover

Removal Procedure

1. Lower the rear window.
2. Remove the manual rear window regulator, if equipped. Refer to *Section 9P, Doors*.
3. Pry off the inside door handle trim bezel.
4. Remove the door trim panel screw (power rear window regulator shown, manual rear window regulator similar).

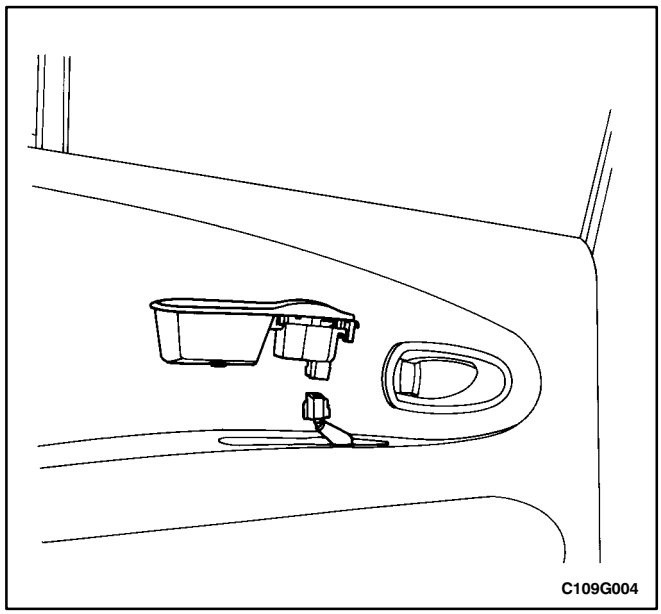

4. Remove the power window control switch.
5. Disconnect the power window control switch electrical connector (power rear window regulator shown, manual rear window regulator similar).

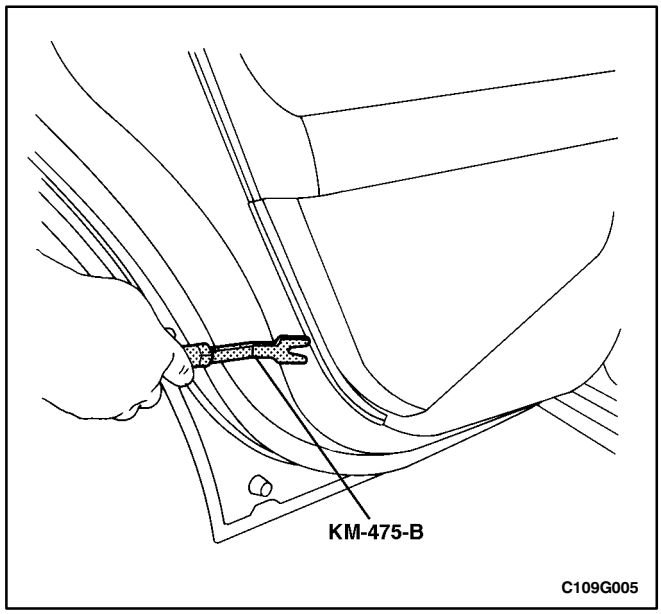

6. Pry off the trim panel using the trim remover KM-475-B.

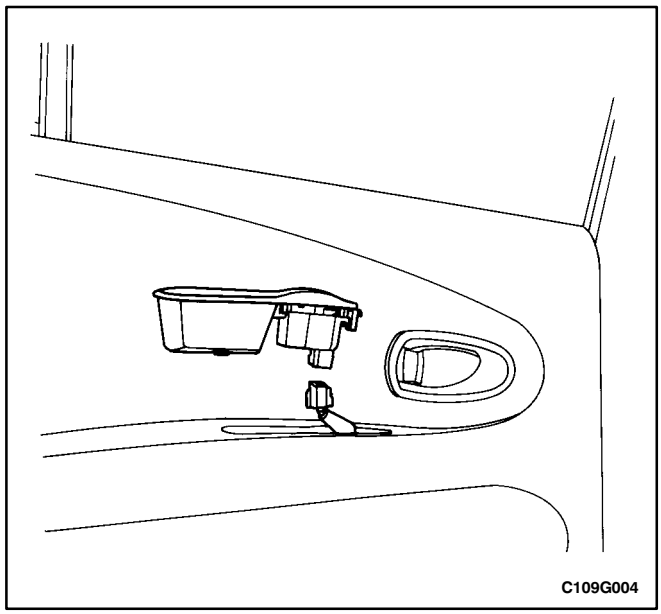

Installation Procedure

1. Install the trim panel.
2. Connect the power window control switch electrical connector.
3. Install the power window control switch.

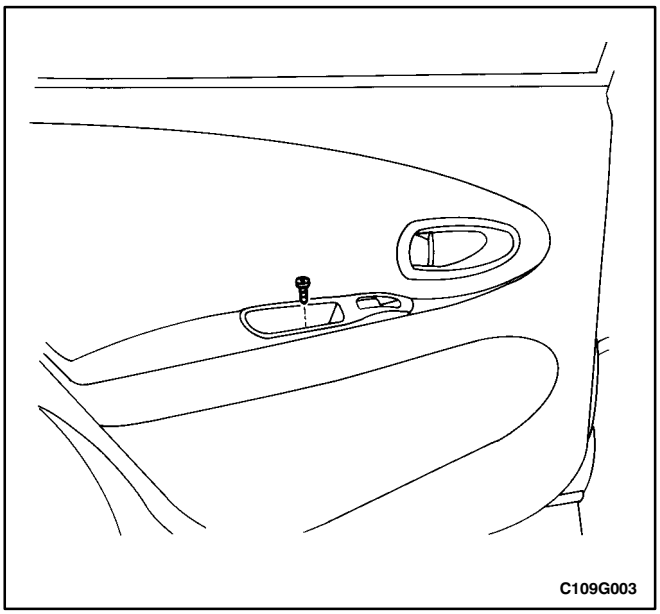

4. Install the door trim panel screw (power rear window regulator shown, manual rear window regulator similar).

Tighten

Tighten the door trim panel screw to 2.5 N•m (22 lb-in).

5. Install the inside door handle trim bezel.
6. Install the manual rear window regulator, if equipped. Refer to *Section 9P, Doors*.
7. Raise the rear window.

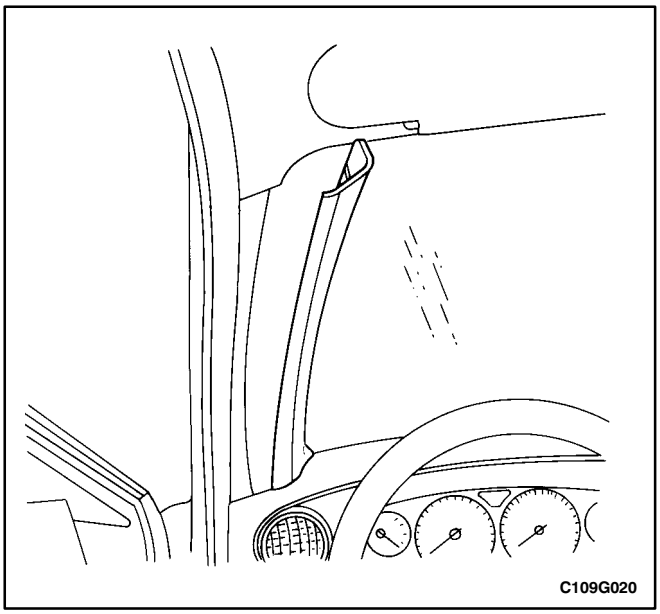

A-PILLAR TRIM PANEL

(Left–Hand Drive Shown, Right–Hand Drive Similar)

Removal Procedure

1. Remove the A-pillar trim panel.

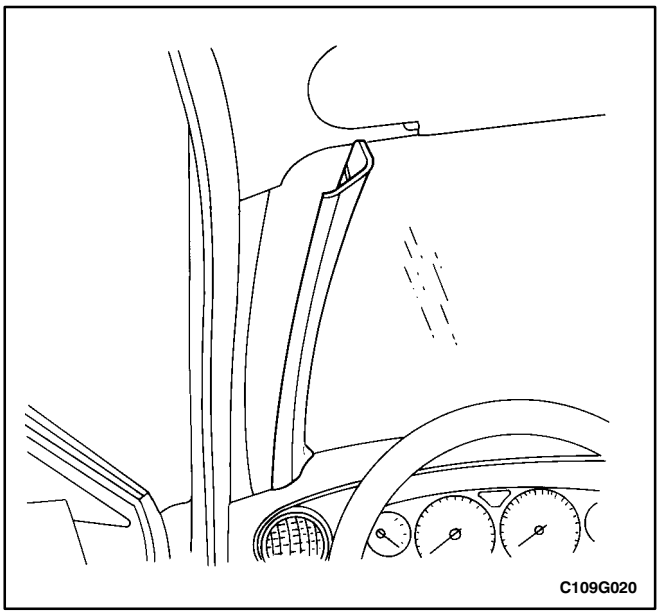

Installation Procedure

1. Install the A-pillar trim panel.

UPPER B-PILLAR TRIM PANEL

Removal Procedure

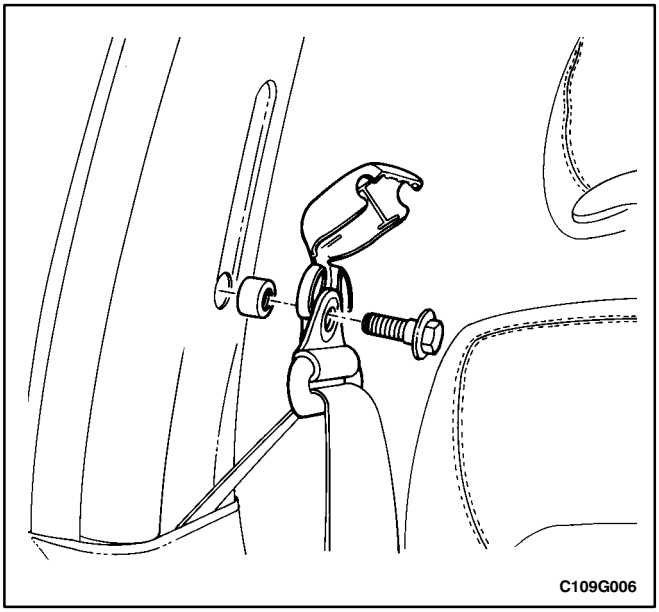

1. Remove the bolt and the upper front seat belt anchor.

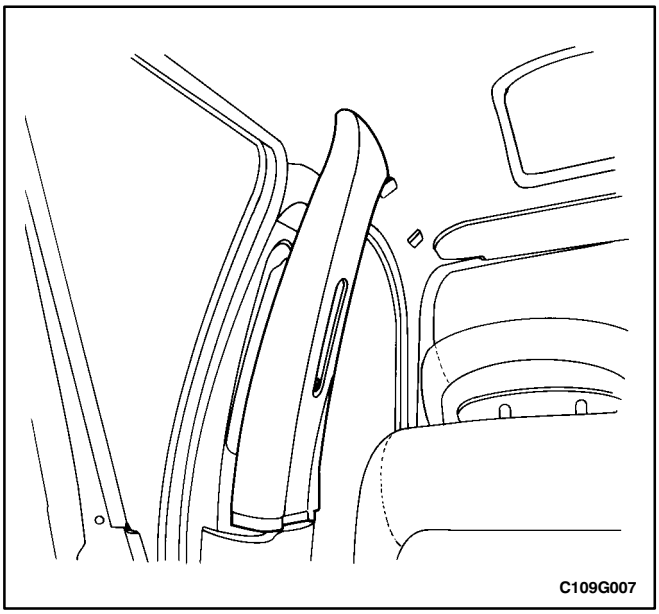

2. Reposition the upper portion of the lower B-pillar trim panel.
3. Pry off the upper B-pillar trim panel.

Installation Procedure

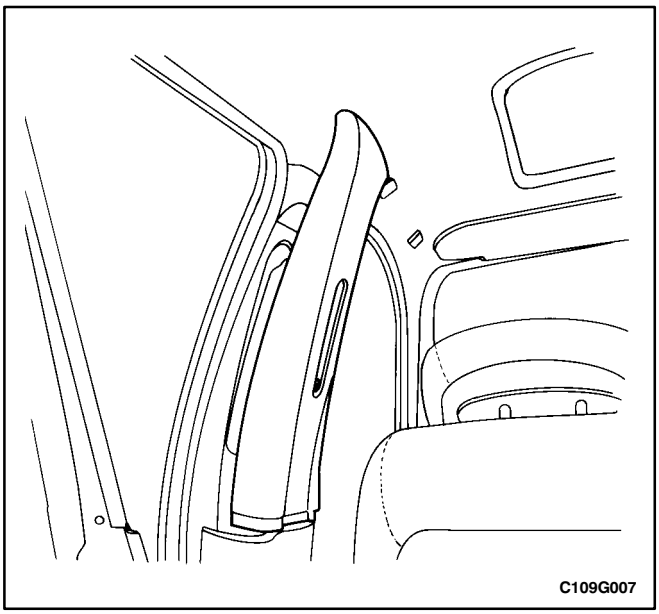

1. Install the upper B-pillar trim panel.

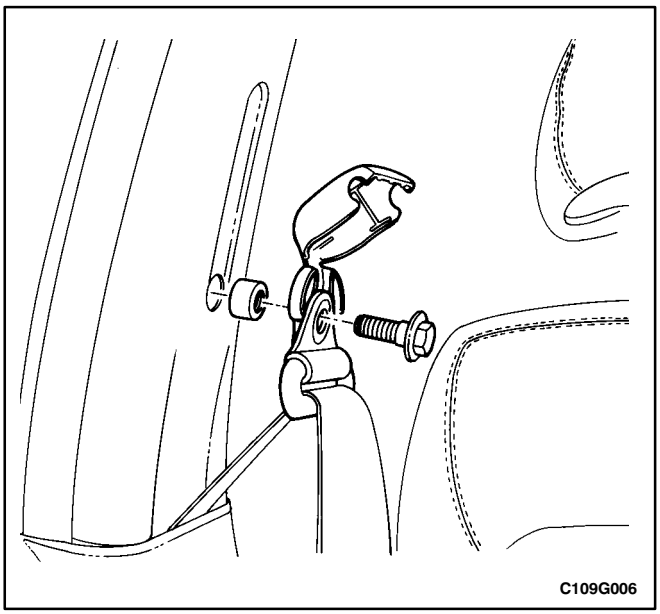

2. Install the upper portion of the lower B-pillar trim panel to its original position.
3. Install the upper front seat belt anchor with the bolt.

Tighten

Tighten the seat belt anchor bolt to 37 N•m (27 lb-ft).

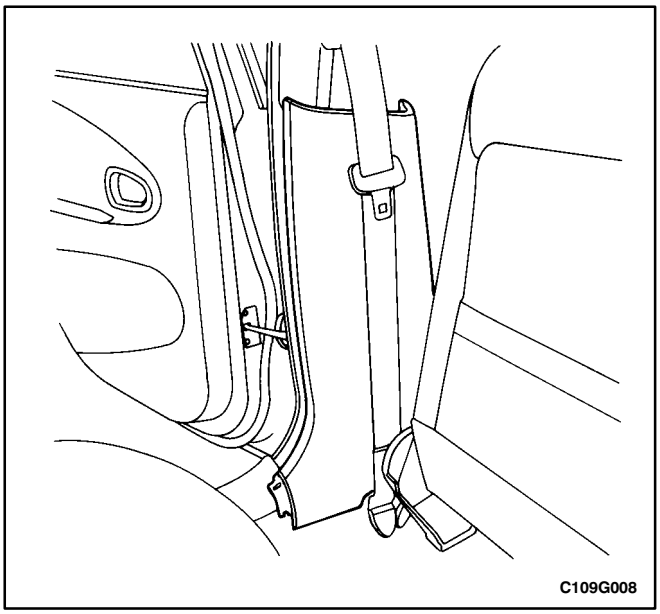

LOWER B-PILLAR TRIM PANEL

Removal Procedure

1. Reposition the rear portion of the front rocker trim panel and the front portion of the rear rocker trim panel.
2. Remove the lower B-pillar trim panel.

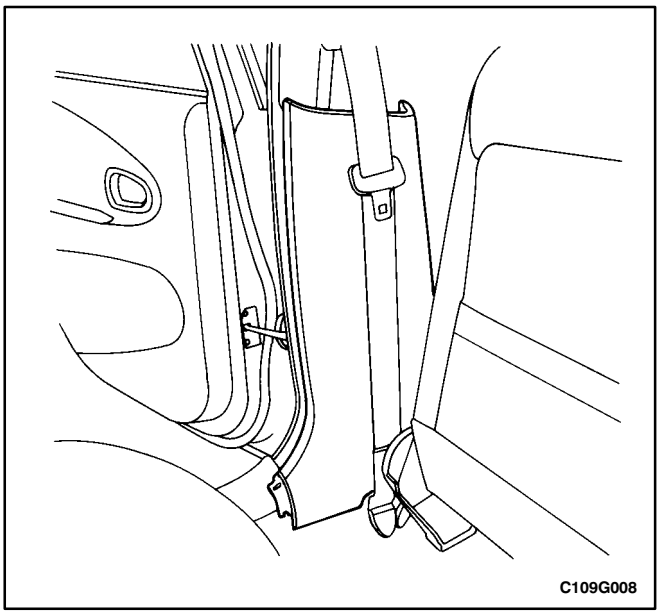

Installation Procedure

1. Install the lower B-pillar trim panel.
2. Install the front rocker trim panel and the rear rocker trim panel to their original positions.

C-PILLAR TRIM PANEL

Removal Procedure

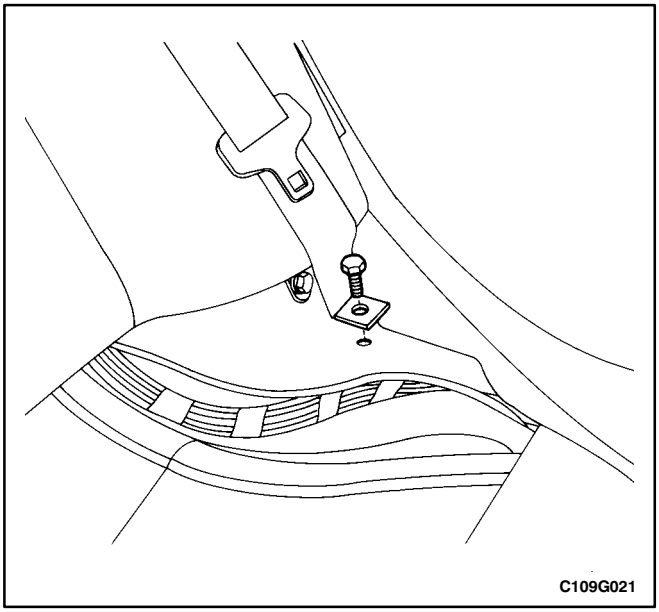

1. Remove the bolt and the rear seat belt floor anchor.

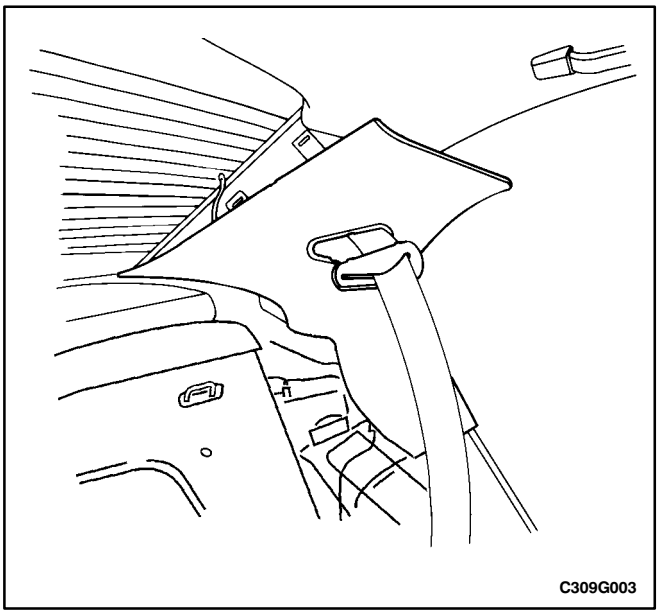

2. Remove the rear seat side bolster cushion. Refer to *Section 9H, Seats*.
3. Pry off the C-pillar trim panel from the body.
4. Remove the seat belt trim piece.
5. Remove the C-pillar trim panel from the seat belt.

Installation Procedure

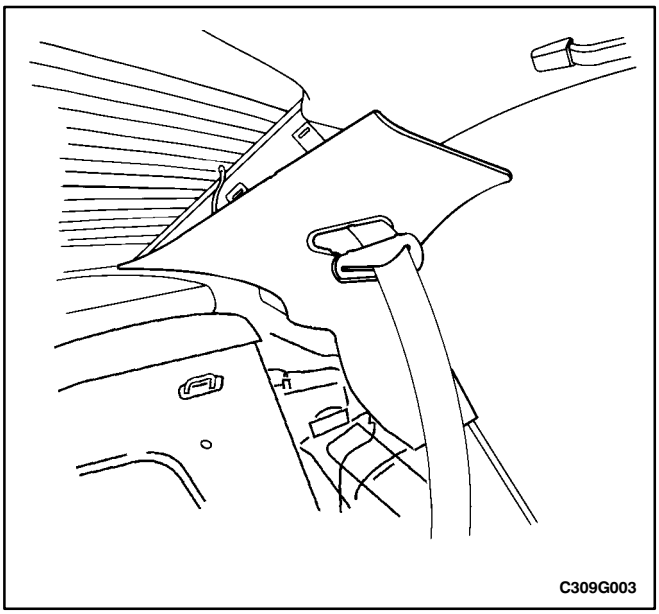

1. Feed the seat belt through the C-pillar trim panel.
2. Install the seat belt trim piece.
3. Install the C-pillar trim panel.

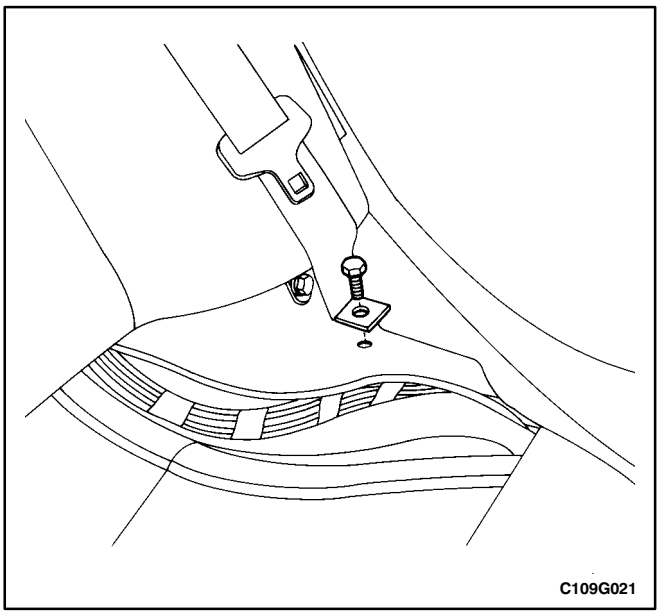

4. Install the rear seat side bolster cushion. Refer to *Section 9H, Seats*.
5. Install the rear seat belt floor anchor with the bolt.

Tighten

Tighten the seat belt anchor bolt to 37 N•m (27 lb-ft).

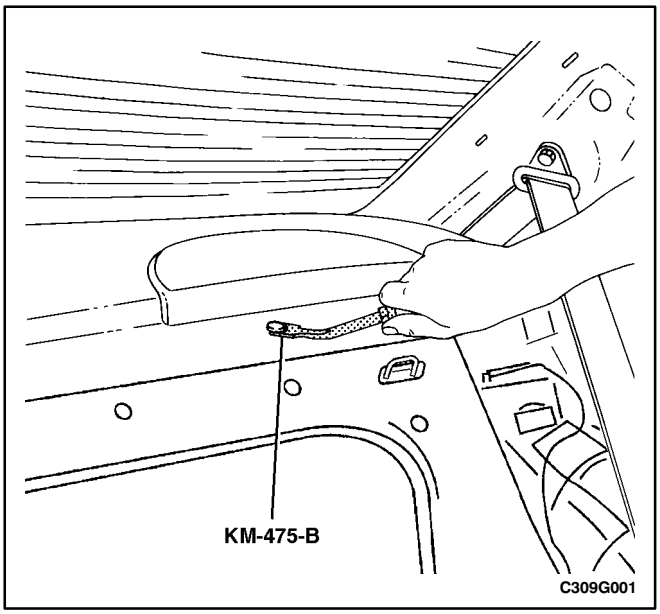

DECK LID SILL PLATE COVER

Tools Required

KM-475-B Trim Remover

Removal Procedure

1. Remove the rear seat side bolster cushion. Refer to *Section 9H, Seats*.
2. Lower the rear seatback.
3. Remove the left side C-pillar trim panel.
4. Remove the plastic retaining clips and the rear deck lid sill plate cover using the trim remover KM-475-B.

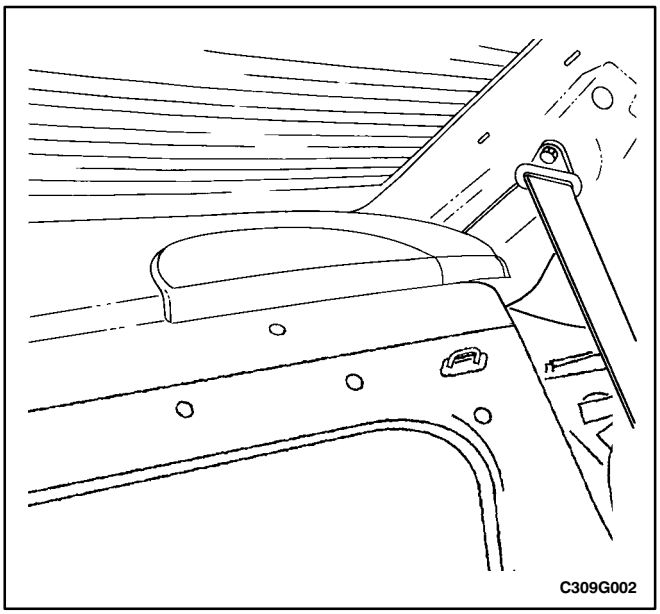

Installation Procedure

1. Install the rear deck lid sill plate cover with the plastic retaining clips.
2. Install the left side C-pillar trim panel.
3. Install the rear seat side bolster cushion. Refer to *Section 9H, Seats*.

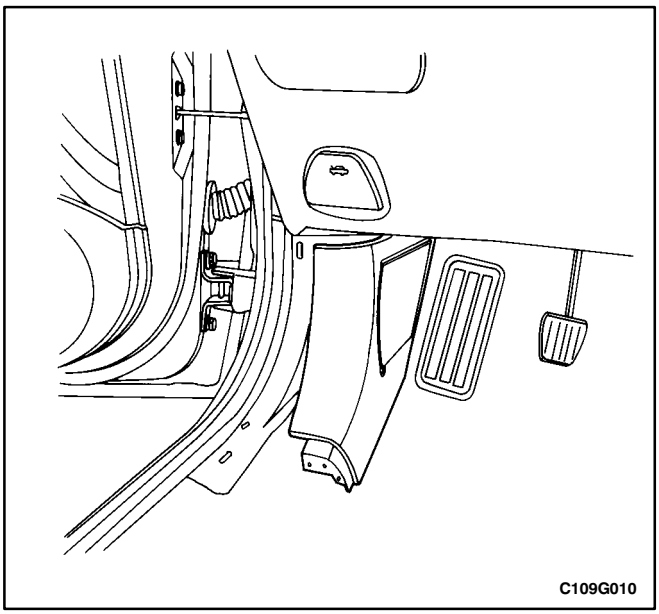

KICK PANEL

(Left–Hand Drive Shown, Right–Hand Drive Similar)

Removal Procedure

1. Remove the front rocker trim panel.
2. Remove the kick panel.

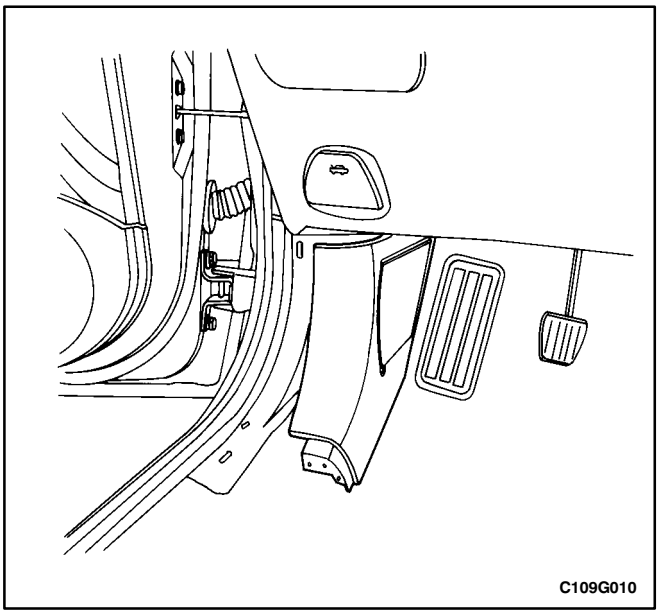

Installation Procedure

1. Install the kick panel.
2. Install the front rocker trim panel.

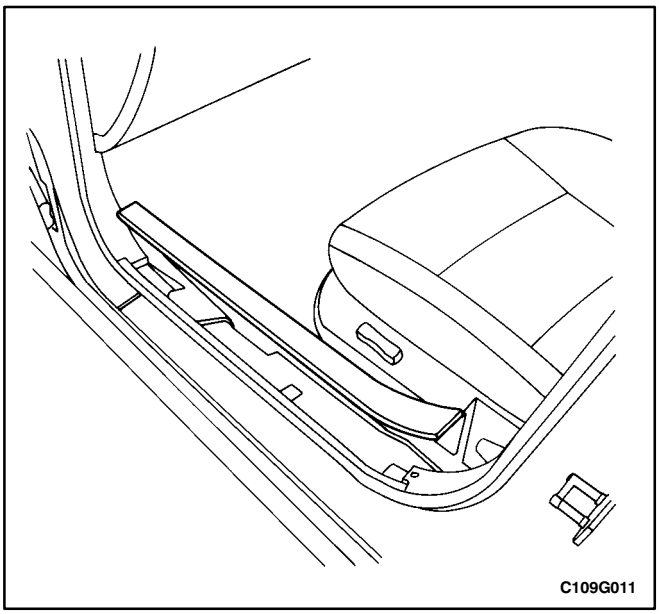

FRONT ROCKER TRIM PANEL

Removal Procedure

1. Remove the front rocker trim panel.

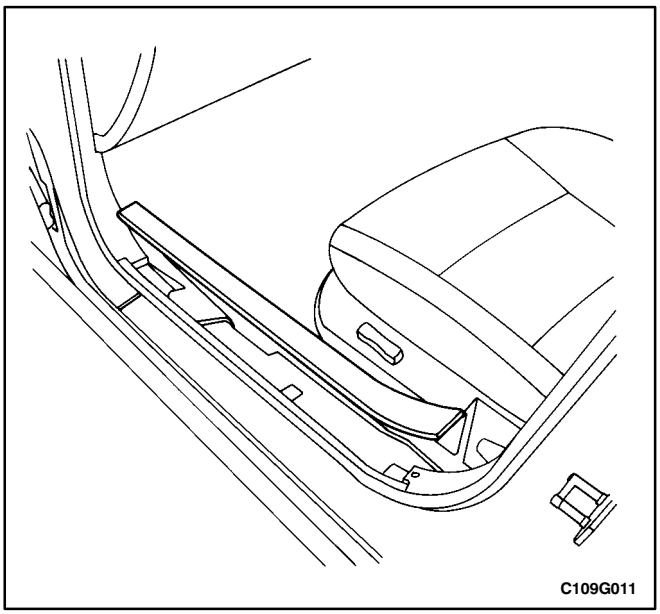

Installation Procedure

1. Install the front rocker trim panel.

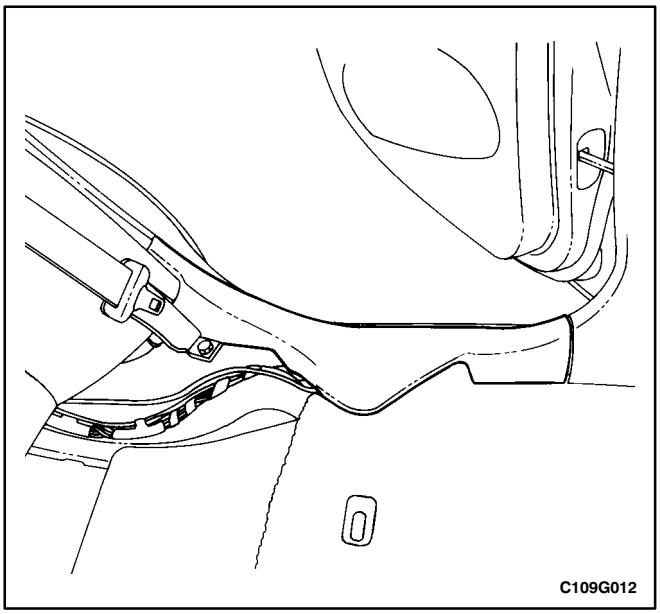

REAR ROCKER TRIM PANEL

Removal Procedure

1. Reposition the rear seat cushion.
2. Remove the rear rocker trim panel.

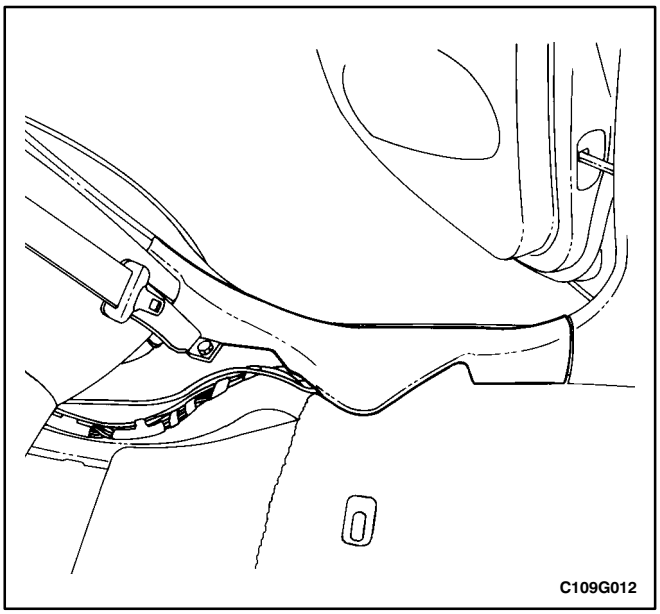

Installation Procedure

1. Install the rear rocker trim panel.
2. Install the rear seat cushion to its original position.

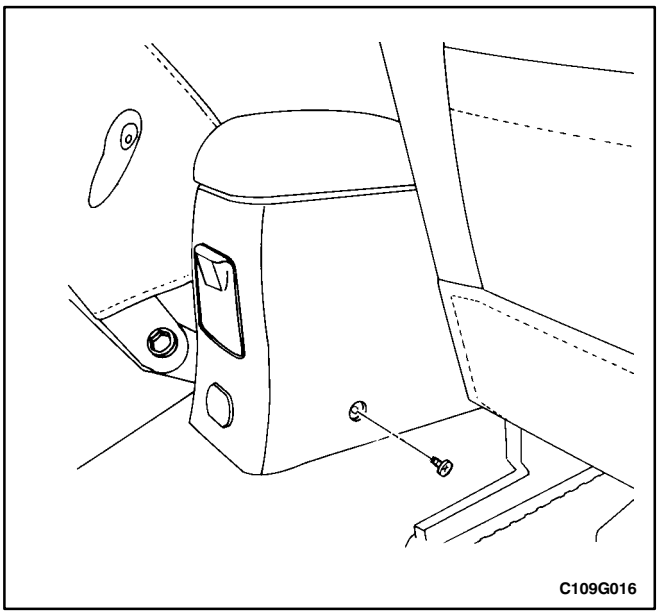

FLOOR CONSOLE

(Left–Hand Drive Shown, Right–Hand Drive Similar)

Removal Procedure

1. Disconnect the negative battery cable.
2. Remove the screws from the rear portion of the floor console.

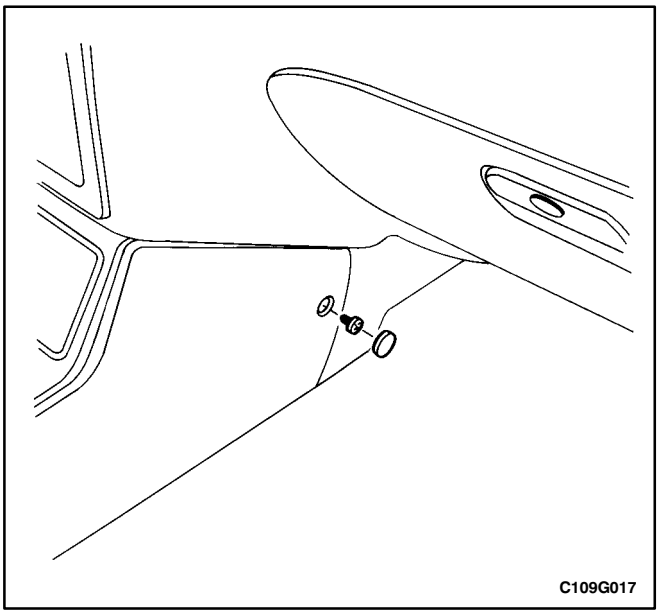

3. Remove the cupholder. Refer to “Cupholder” in this section.
4. Remove the screws from the front portion of the floor console.

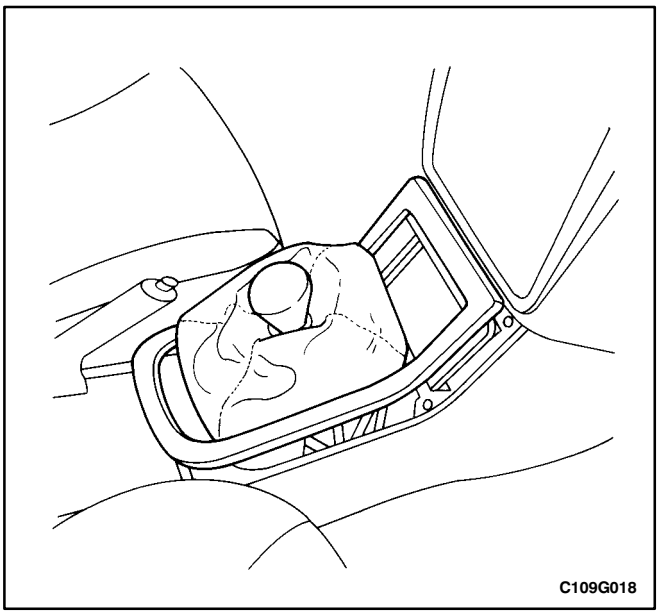

5. Remove the shift lever boot (if equipped).
6. Remove the shift lever trim panel.

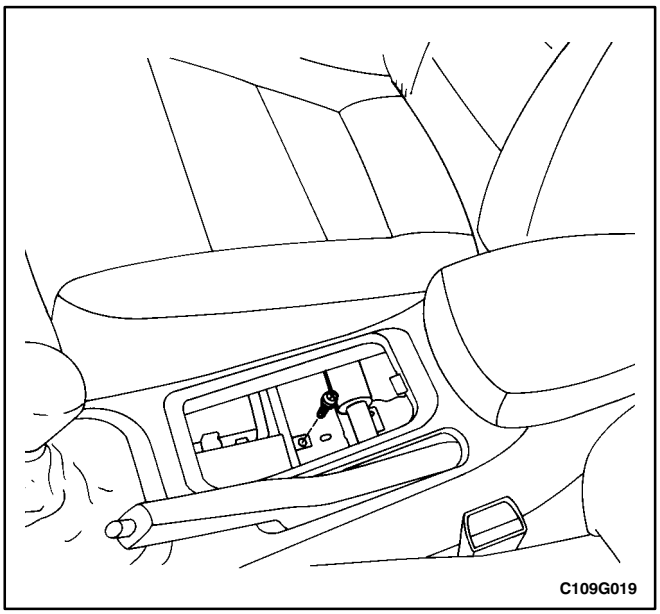

7. Remove the console-to-parking brake assembly screw.
8. Remove the floor console.
9. Disconnect the ashtray and cigar lighter electrical connector.

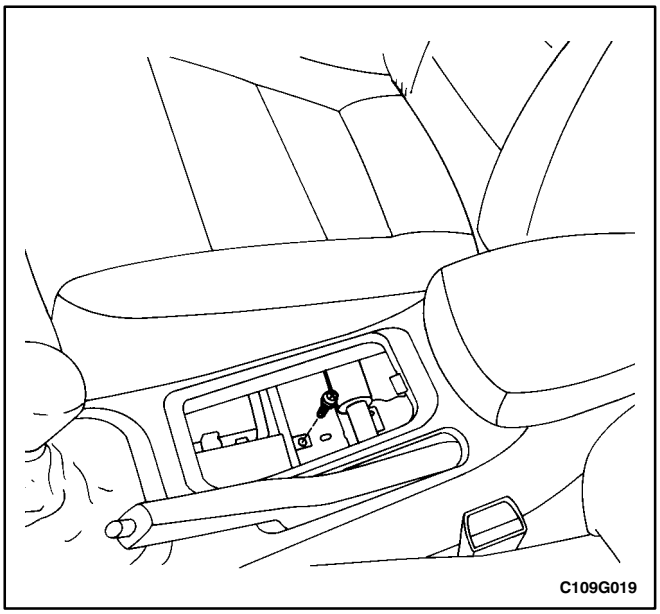

Installation Procedure

1. Connect the ashtray and cigar lighter electrical connector.
2. Install the floor console.
3. Install the console-to-parking brake assembly screw.

   Tighten

   Tighten the console-to-parking brake assembly screw to 4 N•m (35 lb-in).

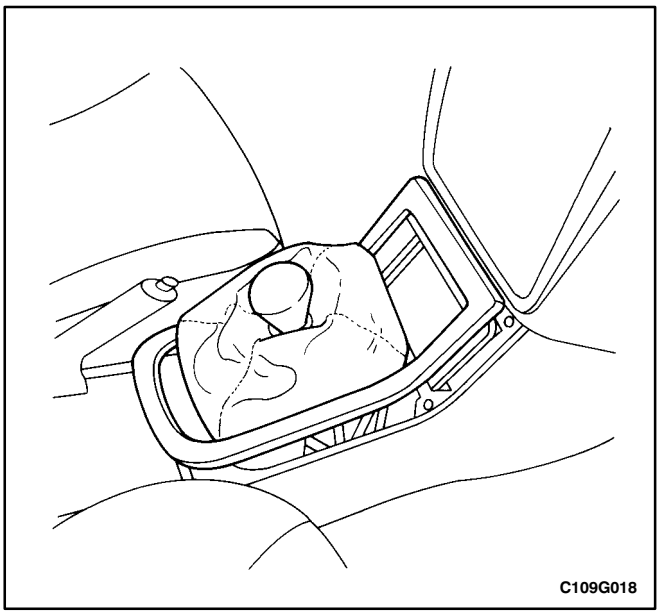

4. Install the shift lever trim panel.
5. Install the shift lever boot (if equipped).

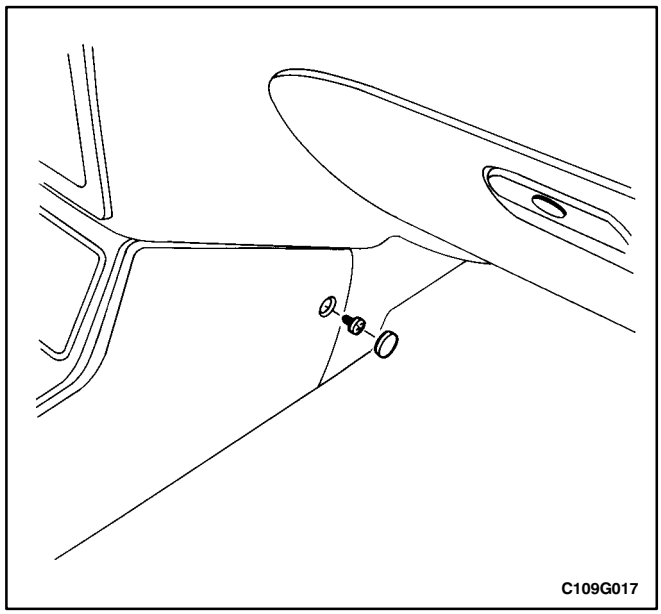

6. Install the screws into the front portion of the floor console.

Tighten

Tighten the floor console screws to 2.5 N•m (22 lb-in).

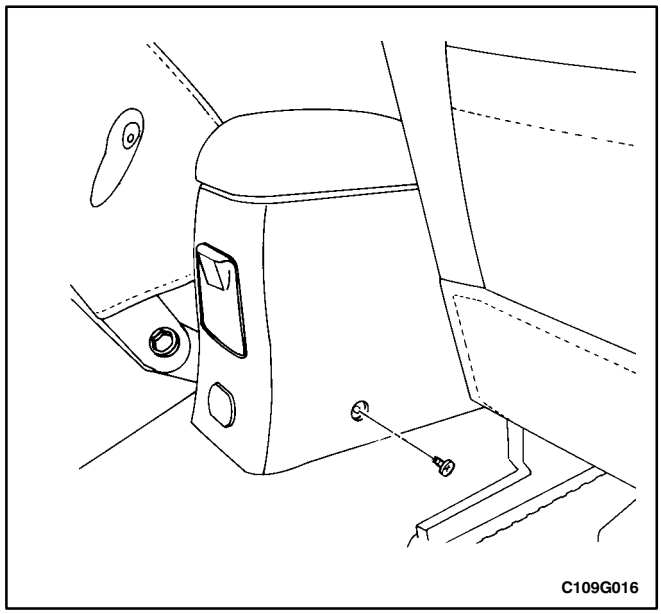

7. Install the cupholder. Refer to “Cupholder” in this section.
8. Install the rear portion of the floor console with the screws.

Tighten

Tighten the floor console screws to 2.5 N•m (22 lb-in).

9. Connect the negative battery cable.

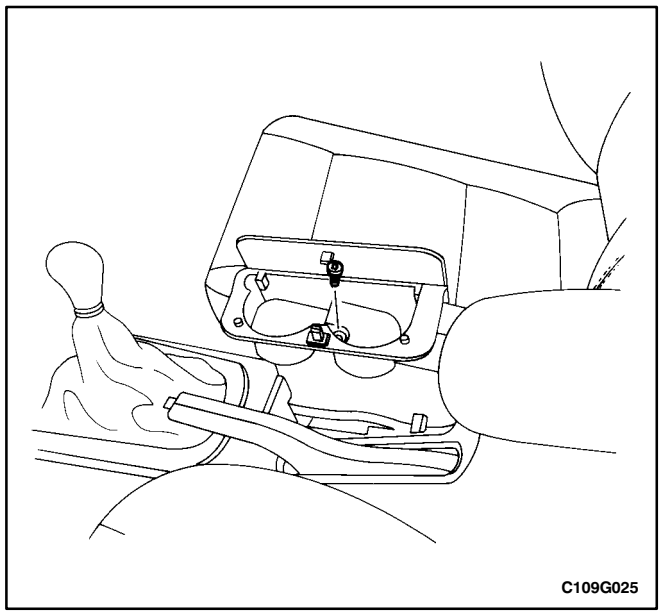

CUPHOLDER

(Left–Hand Drive Shown, Right–Hand Drive Similar)

Removal Procedure

1. Remove the screw and the cupholder.

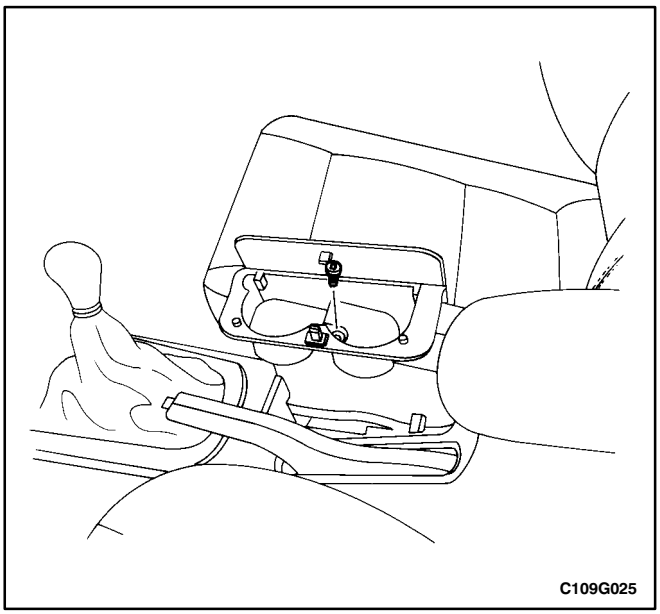

1. Install the cupholder with the screw.

Tighten

Tighten the cupholder screw to 2.5 N•m (22 lb-in).

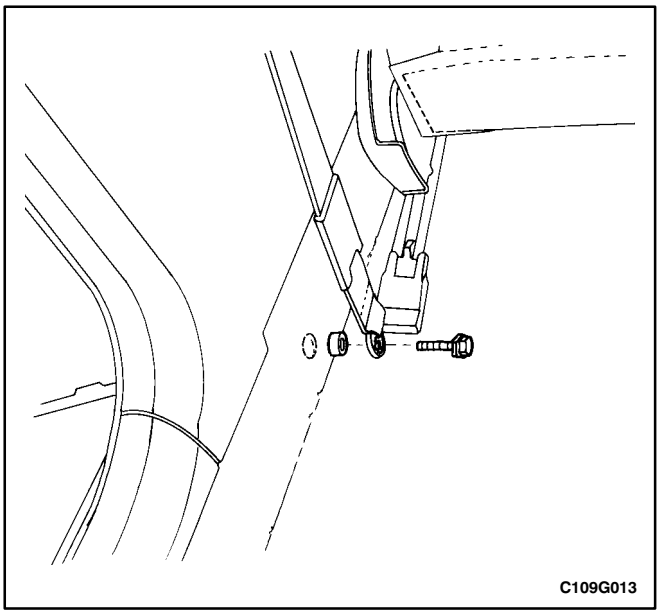

FLOOR CARPET

Removal Procedure

1. Disconnect the negative battery cable.
2. Remove the rear seat cushion. Refer to *Section 9H, Seats.*
3. Remove the left and the right rear rocker trim panels. Refer to “Rear Rocker Trim Panel” in this section.
4. Remove the bolts and the left and the right lower front seat belt anchors from the B-pillar.

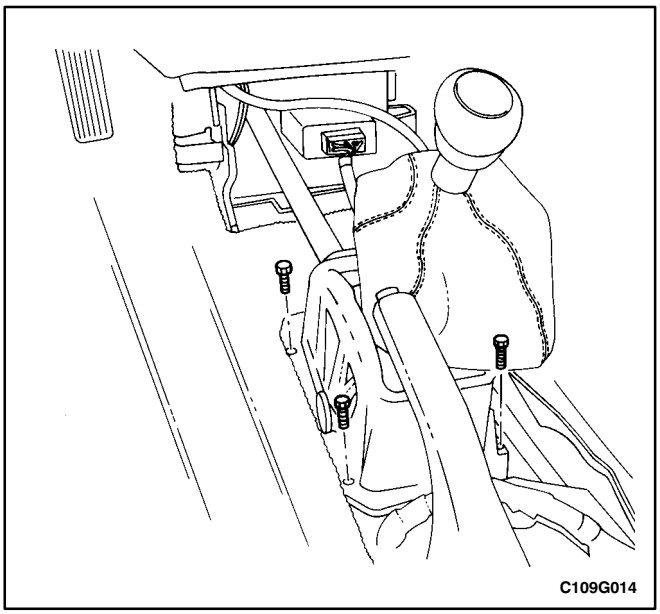

5. Remove the left and the right front rocker trim panels.
6. Remove the left and the right lower B-pillar trim panels. Refer to “Lower B-Pillar Trim Panel” in this section.
7. Remove the front seats. Refer to *Section 9H, Seats*.
8. Remove the left and the right kick panels. Refer to “Kick Panel” in this section.
9. Remove the floor console. Refer to “Floor Console” in this section.
10. Remove the gearshift housing bolts and reposition the gearshift housing.

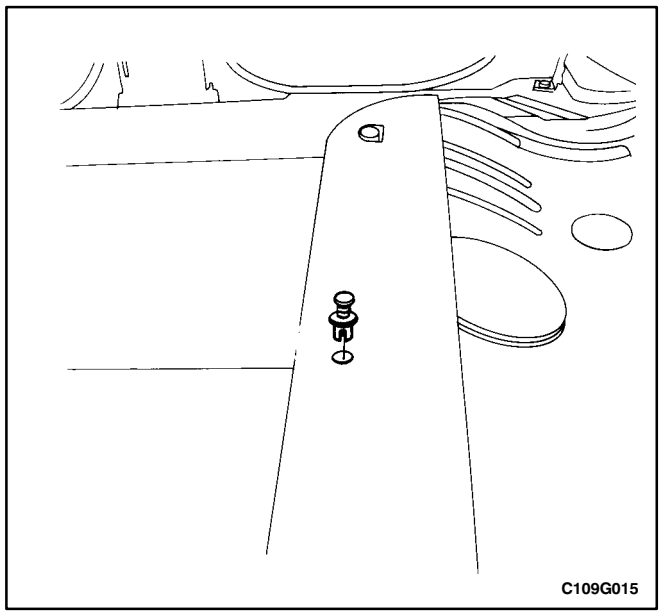

11. Remove the floor carpet retaining clip.
12. Remove the floor carpet.

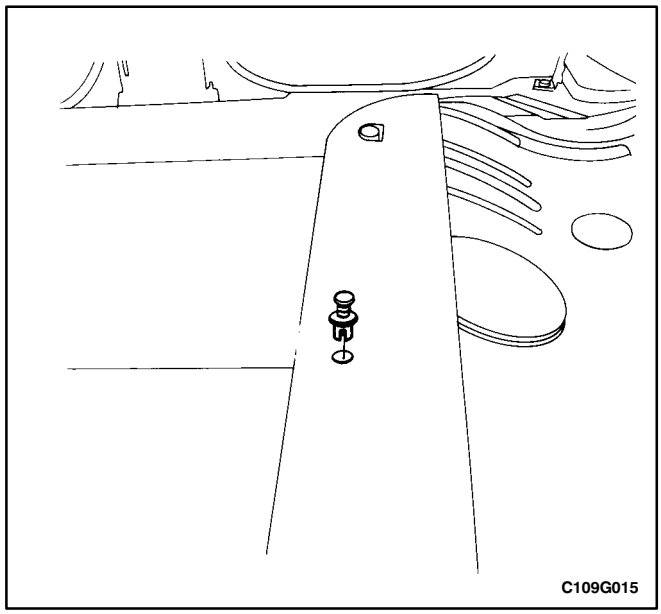

Installation Procedure

1. Install the floor carpet.
2. Install the floor carpet retaining clips.

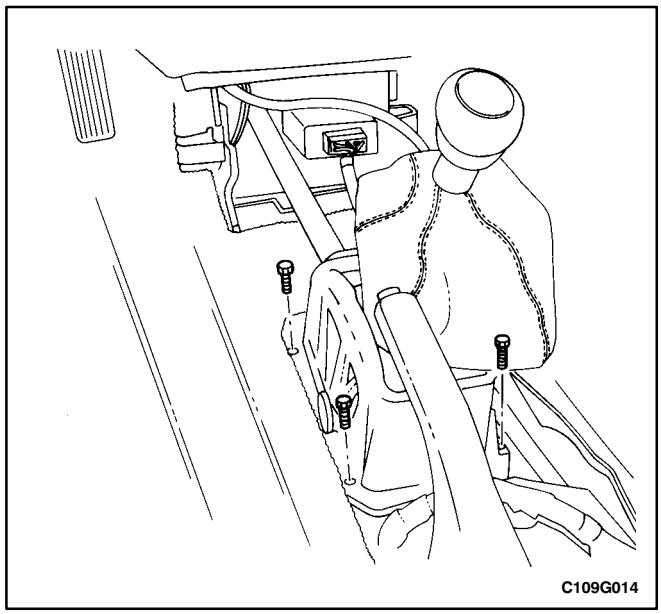

3. Install the gearshift housing with the bolts.

Tighten

Tighten the gearshift housing bolts to 7 N•m (62 lb-in).

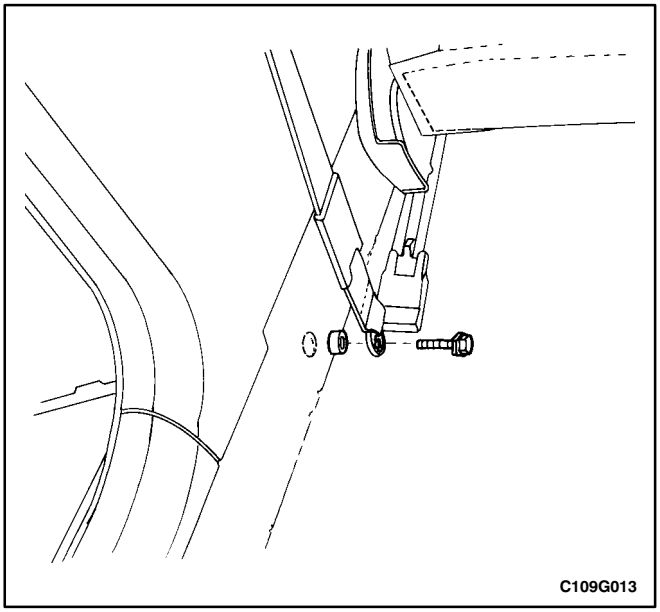

4. Install the floor console. Refer to “Floor Console” in this section.
5. Install the left and the right kick panels. Refer to “Kick Panel” in this section.
6. Install the front seats. Refer to *Section 9H, Seats*.
7. Install the left and the right lower B-pillar trim panels. Refer to “Lower B-Pillar Trim Panel” in this section.
8. Install the left and the right front rocker trim panels.
9. Install the left and the right lower front seat belt anchors to the B-pillar with the bolts.

Tighten

Tighten the seat belt anchor bolts to 37 N•m (27 lb-ft).

10. Install the left and the right rear rocker trim panels. Refer to “Rear Rocker Trim Panel” in this section.
11. Install the rear seat cushion. Refer to *Section 9H, Seats.*
12. Connect the negative battery cable.

LUGGAGE COMPARTMENT WHEELHOUSE TRIM PANEL

Tools Required

KM-475-B Trim Remover

Removal Procedure

1. Remove the plastic retaining clips using the trim remover KM-475-B and reposition the luggage compartment rear trim panel.
2. Remove the plastic retaining clips and the wheelhouse trim panel.

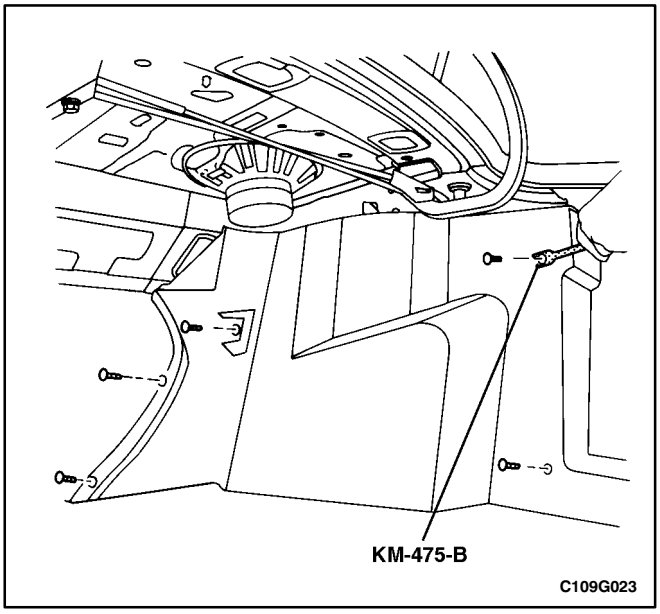

Installation Procedure

1. Install the wheelhouse trim panel with the plastic retaining clips.
2. Install the luggage compartment rear trim panel to its original position.
3. Secure the luggage compartment rear trim panel with the plastic retaining clips.

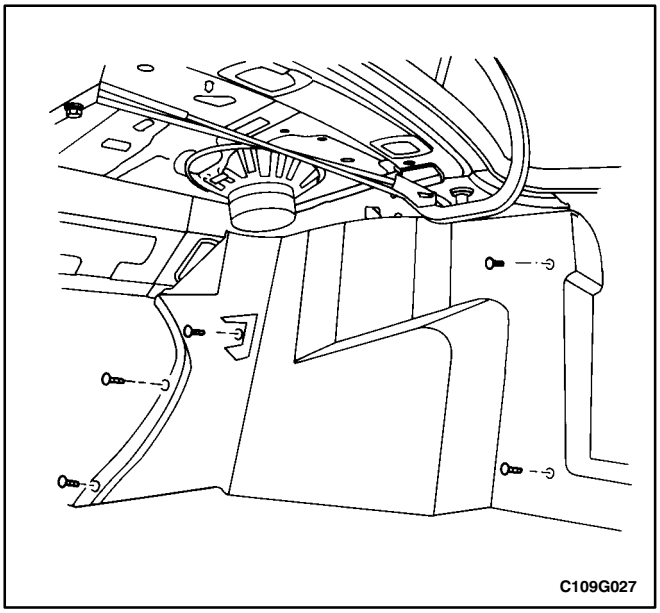

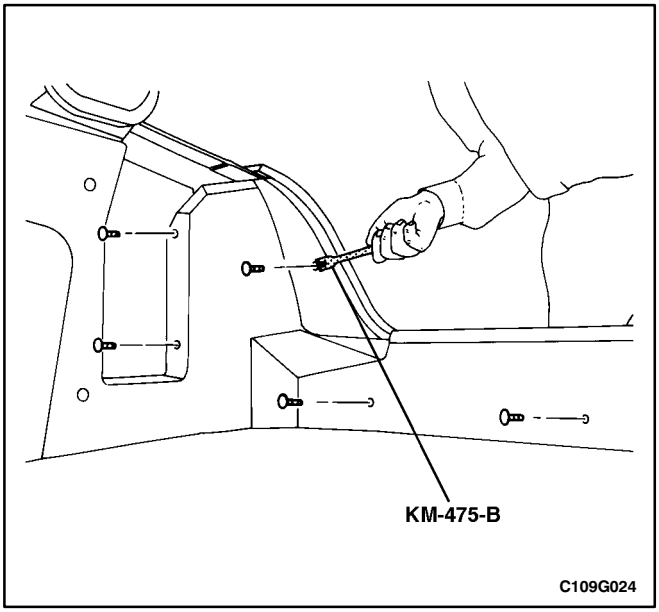

LUGGAGE COMPARTMENT REAR TRIM PANEL

Tools Required

KM-475-B Trim Remover

Removal Procedure

1. Remove the protective trim cover using the trim remover KM-475-B.
2. Remove the plastic retaining clips and the rear trim panel.

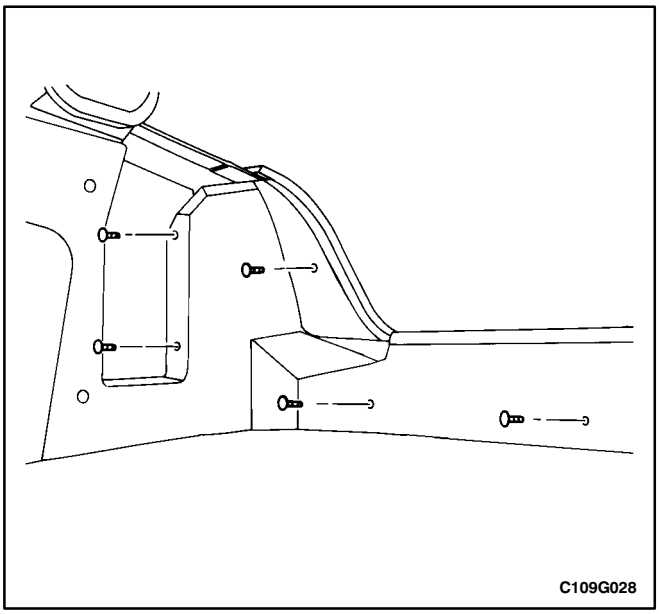

Installation Procedure

1. Install the rear trim panel with the plastic retaining clips.
2. Install the protective trim cover.

GENERAL DESCRIPTION AND SYSTEM OPERATION

INTERIOR TRIM PANELS

The interior trim panels are molded plastic and fasten with screws or plastic clips.

PRESSURE RELIEF VENT

When all the windows are closed and the ventilation system is on, the addition of outside air to the interior of the vehicle causes a positive pressure within the vehicle. In order to relieve the pressure, air is released through a pressure relief vent. The pressure relief vents are located at the rear quarter of the vehicle, behind the bumper fascia.

FLOOR CONSOLE

The floor console fits over the tunnel in the floor of the vehicle and extends from under the center of the instrument panel to the rear seat area. The front portion of
the console contains the cigar lighter and the transaxle shift lever. The rear portion of the console contains the parking brake lever, a cupholder, a storage compartment, and an ashtray for the rear seat occupants.

The sensing and diagnostic module (SDM) for the airbag system and the remote keyless entry module are located under the console.

FLOOR CARPET

The one-piece floor carpet goes over both the front and the rear floor pans.

SECTION 9H

SEATS

CAUTION: Disconnect the negative battery cable before removing or installing any electrical unit or when a tool or equipment could easily come in contact with exposed electrical terminals. Disconnecting this cable will help prevent personal injury and damage to the vehicle. The ignition must also be in LOCK unless otherwise noted.

TABLE OF CONTENTS

Specifications 9H-1
Fastener Tightening Specifications 9H-1
Schematic and Routing Diagrams 9H-2
Power Drive Seat Circuit 9H-2
Diagnosis 9H-3
Power Drive Seat 9H-3
Maintenance and Repair 9H-7
On-Vehicle Service 9H-7
Front Bucket Seat 9H-7
Front Seatback 9H-8
Front Seat Cushion 9H-9
Front Bucket Seat Track 9H-10
Power Driver Seat Tilt Motors 9H-11
Power Driver Seat Slide Assembly 9H-11
Seat Recliner Lever 9H-12
Lumbar Support Lever 9H-13
Height Adjustment Knobs 9H-13
Front Seat Trim 9H-14
Head Restraint 9H-15
Rear Seat Cushion 9H-16
Split Rear Seatback 9H-16
Split Rear Seatback Hinge 9H-17
Split Rear Seatback Lock Striker 9H-18
Rear Seat Side Bolster Cushion 9H-19
Rear Seat Center Armrest 9H-20
Seat Covers 9H-20
General Description and System Operation 9H-17
Seats 9H-17

SPECIFICATIONS

FASTENER TIGHTENING SPECIFICATIONS

Application	N•m	Lb-Ft	Lb-In
Armrest Nuts	12	–	106
Front Seatback Bolts	45	33	–
Front Seat Cover Screws	12	–	106
Front Seat Cushion Bolts	12	–	106
Front Seat Trim Screws	12	–	106
Front Seat-to-Floor Bolts	25	18	–
Height Adjustment Knob Screw	2	–	18
Lumbar Support Lever Screw	10	–	89
Rear Seatback Bolts	25	18	–
Rear Seatback Lock Striker Bolts	25	18	–
Rear Seatback Nuts	25	18	–
Rear Seat Hinge Bolts	12	–	106
Rear Seat Side Bolster Cushion Bolt	25	18	–
Seat Recliner Lever Screw	12	–	106
Slide Assembly Bolts	25	18	–
Slide Assembly Nuts	15	11	–
Slide Assembly Screws	10	–	89
Tilt Motor Bolts	13	–	115

SCHEMATIC AND ROUTING DIAGRAMS

POWER DRIVE SEAT CIRCUIT

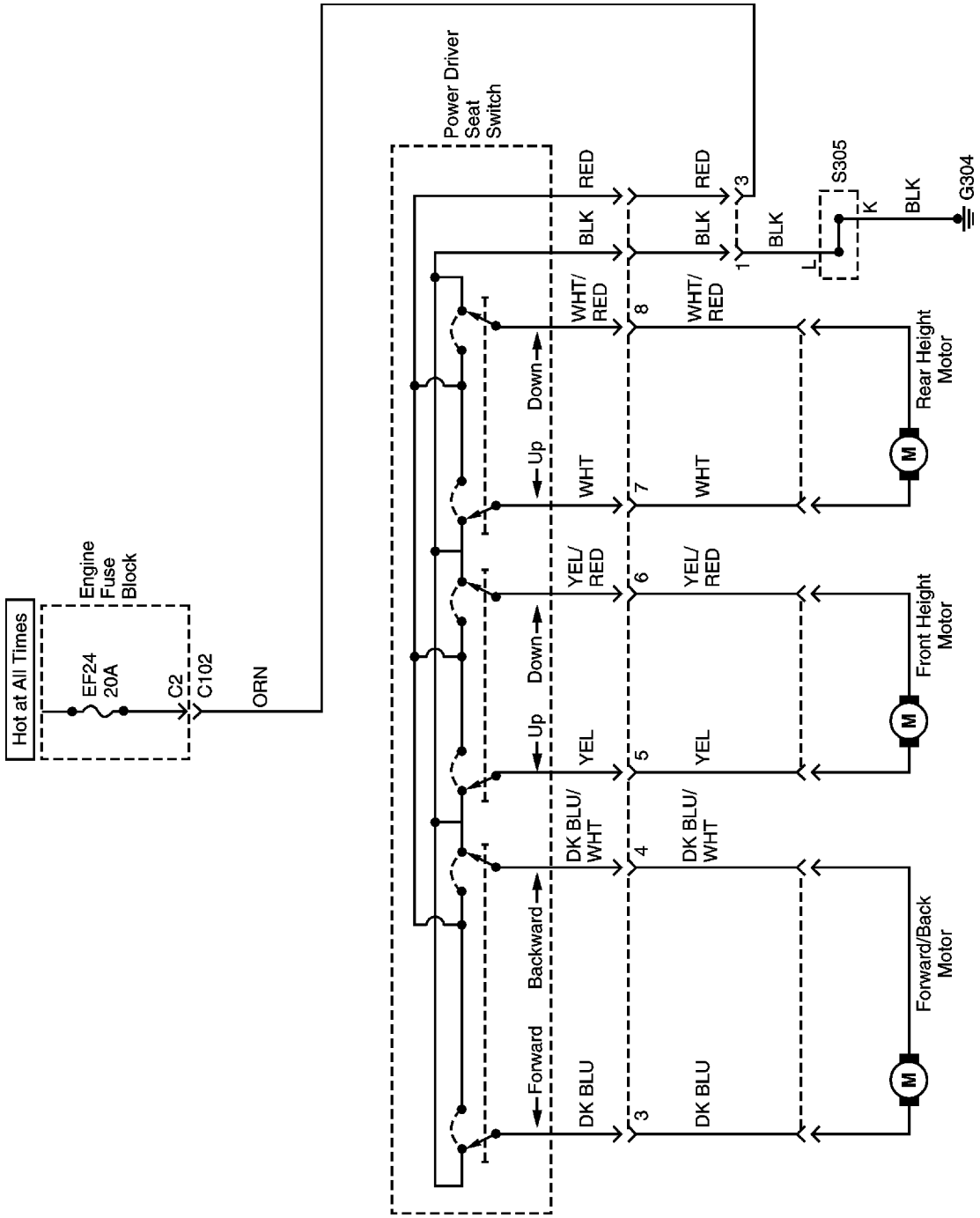

DIAGNOSIS

POWER DRIVER SEAT

Caution: If the driver seat motor is powered directly from a battery, personal injury could be caused by sparking and sudden heating of the terminals if the wires from the battery are touched together. Use a fused jumper wire, and use terminal test adapters if available. If terminal test adapters are not available, use insulating tape to reduce the possibility of touching the jumpers together.

Diagnostic Aids

If resistance is measured between the terminals of the motor connectors, the frontward/backward motor resistance is approximately equal to 1 Ω, the front height motor resistance is approximately equal to 5 Ω, and the rear height motor resistance is approximately equal to 9 Ω.

Power Driver Seat Does Not Work

Step	Action	Value(s)	Yes	No
1	Visually and physically check for proper connections at the following connectors: ● The four-pin connector under the driver seat. ● The connector to the power driver seat switch. Were the connectors firmly attached?	–	Go to *Step 3*	Go to *Step 2*
2	1. Properly connect the connectors. 2. Attempt to adjust the power driver seat. Does the power driver seat work after the connectors were correctly attached?	–	System OK	Go to *Step 3*
3	Attempt to adjust the power driver seat in each of the three directions: frontward/backward, front height, rear height. Does the seat adjust in any direction?	–	Go to *Step 8*	Go to *Step 4*
4	1. Disconnect the four-pin connector from the body wiring harness which is found under the driver seat. 2. Turn the ignition ON. 3. Check the voltage at the ORN wire and the body harness side of the four-pin connector. Is the voltage equal to the specified value?	11-14 v	Go to *Step 6*	Go to *Step 5*
5	Repair the power supply to the ORN wire and fuse EF24. Is the repair complete?	–	System OK	–
6	Use an ohmmeter to check the resistance between ground and the BLK wire at the disconnected four-pin connector, body harness side. Is the resistance equal to the specified value?	≈0 Ω	Go to *Step 8*	Go to *Step 7*
7	Repair the open BLK wire between ground and the four-pin body harness connector under the driver seat. Is the repair complete?	–	System OK	–
8	Attempt to adjust the power driver seat forward and backward. Does the power driver seat move forward and backward?	–	Go to *Step 14*	Go to *Step 9*

Power Driver Seat Does Not Work (Cont'd)

Step	Action	Value(s)	Yes	No
9	1. Disconnect the power driver seat switch electrical connector. 2. Move a vehicle battery near enough to the power driver seat switch so that jumper wires can reach from the battery to the switch. 3. Connect a jumper wire between the test battery negative terminal and the DK BLU wire at terminal 3 on the motor side of the power driver seat switch. 4. Carefully connect a fused jumper wire between the test battery positive terminal the DK BLU/WHT wire at terminal 4 on the motor side of the power driver seat switch. The two terminals are close together, and the motor may have a short circuit, so a fused jumper wire is recommended. Do not allow the wires from the battery to touch each other. If the motor is okay and it is not at the end of its travel, the power driver seat should move. 5. To enable the motor to operate in the opposite direction, carefully reverse the battery connections between DK BLU and DK BLU/WHT. Does the motor run backward and forward when the motor was directly powered by a vehicle battery?	–	Go to *Step 10*	Go to *Step 11*
10	1. Replace the power driver seat switch. 2. The power driver seat switch can be installed backward, so test the switch to verify that it is installed correctly before reinstalling the front power driver seat trim and switch. 3. Install the front power driver seat trim. Is the repair complete?	–	System OK	–
11	1. Disconnect the two-pin connector that joins the DK BLU and DK BLU/WHT wires from the power driver seat switch to the forward/backward motor. 2. Use an ohmmeter to check the resistance of the DK BLU and DK BLU/WHT wires between the power driver seat switch connector and the forward/backward motor connector. Is the resistance of each wire equal to the specified value?	≈0 Ω	Go to *Step 13*	Go to *Step 12*
12	Repair the open circuit in the DK BLU wire or the DK BLU/WHT wire. Is the repair complete?	–	System OK	–
13	Replace the power driver seat motor assembly. Is the repair complete?	–	System OK	–
14	Attempt to adjust the power driver seat front height. Does the front height adjustment work?	–	Go to *Step 18*	Go to *Step 15*

Power Driver Seat Does Not Work (Cont'd)

Step	Action	Value(s)	Yes	No
15	1. Disconnect the power driver seat switch electrical connector. 2. Move a vehicle battery near enough to the power driver seat switch so that jumper wires can reach from the battery to the switch. 3. Connect a jumper wire between the test battery negative terminal and the YEL wire at terminal 5 on the motor side of the power driver seat switch. 4. Carefully connect a fused jumper wire between the test battery positive terminal and the YEL/RED wire at terminal 6 on the motor side of the power driver seat switch. The two terminals are close together, and the motor may have a short circuit, so a fused jumper wire is recommended. Do not allow the wires from the battery to touch each other. If the motor is good and it is not at the end of its travel, the power driver seat should move. 5. To enable the motor to operate in the opposite direction, carefully reverse the battery connections between YEL and YEL/RED. Did the height adjust up and down when the motor was directly powered by a vehicle battery?	–	Go to *Step 10*	Go to *Step 16*
16	1. Disconnect the two-pin connector that joins the YEL and YEL/RED wires from the power driver seat switch to the front height motor. 2. Use an ohmmeter to check the resistance of the YEL and YEL/RED wires between the power driver seat switch connector and the front height motor connector. Is the resistance of each wire equal to the specified value?	≈0 Ω	Go to *Step 13*	Go to *Step 17*
17	Repair the open circuit in the YEL wire or the YEL/RED wire. Is the repair complete?	–	System OK	–
18	Attempt to adjust the power driver seat rear height. Does the rear height adjustment work?	–	System OK	Go to *Step 19*

Power Driver Seat Does Not Work (Cont'd)

Step	Action	Value(s)	Yes	No
19	1. Disconnect the power driver seat switch electrical connector. 2. Move a vehicle battery near enough to the power driver seat switch so that jumper wires can reach from the battery to the switch. 3. Connect a jumper wire between the test battery negative terminal and the WHT wire at terminal 7 on the motor side of the power driver seat switch. 4. Carefully connect a fused jumper wire between the test battery positive terminal the WHT/RED wire at terminal 8 on the motor side of the power driver seat switch. The two terminals are close together, and the motor may have a short circuit, so a fused jumper wire is recommended. Do not allow the wires from the battery to touch each other. If the motor is good and it is not at the end of its travel, the power driver seat should move. 5. To enable the motor to operate in the opposite direction, carefully reverse the battery connections between WHT and WHT/RED. Did the height adjust up and down when the motor was directly powered by a vehicle battery?	–	Go to *Step 10*	Go to *Step 20*
20	1. Disconnect the two-pin connector that joins the WHT and WHT/RED wires from the power driver seat switch to the front height motor. 2. Use an ohmmeter to check the resistance of the WHT and WHT/RED wires between the power driver seat switch connector and the front height motor connector. Is the resistance of each wire equal to the specified value?	≈0 Ω	Go to *Step 13*	Go to *Step 21*
21	Repair the open circuit in the WHT wire or the WHT/RED wire. Is the repair complete?	–	System OK	–

MAINTENANCE AND REPAIR

ON-VEHICLE SERVICE

FRONT BUCKET SEAT

(Left–Hand Drive Shown, Right–Hand Drive Similar)

Removal Procedure

1. Disconnect the negative battery cable.
2. Remove the plastic caps and the bolts securing the rear portion of the front seat to the floor.

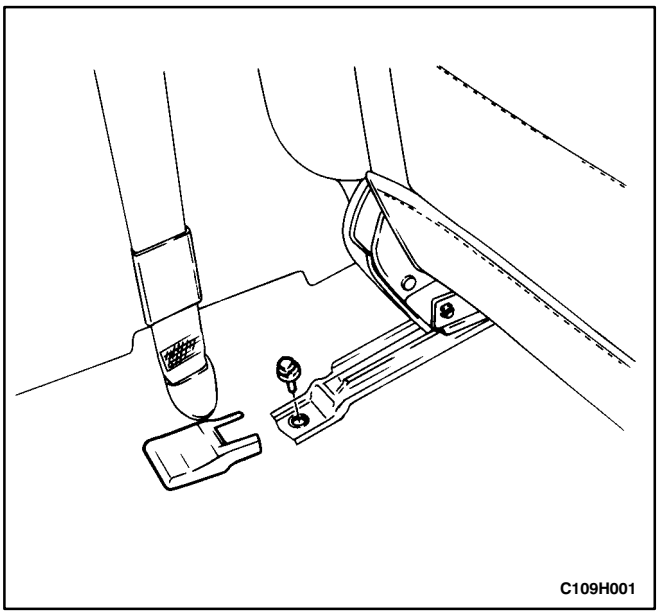

3. Remove the plastic caps and the bolts securing the front portion of the front seat to the floor (power driver seat shown, manual driver seat similar).
4. Disconnect the electrical connectors.
5. Remove the seat.

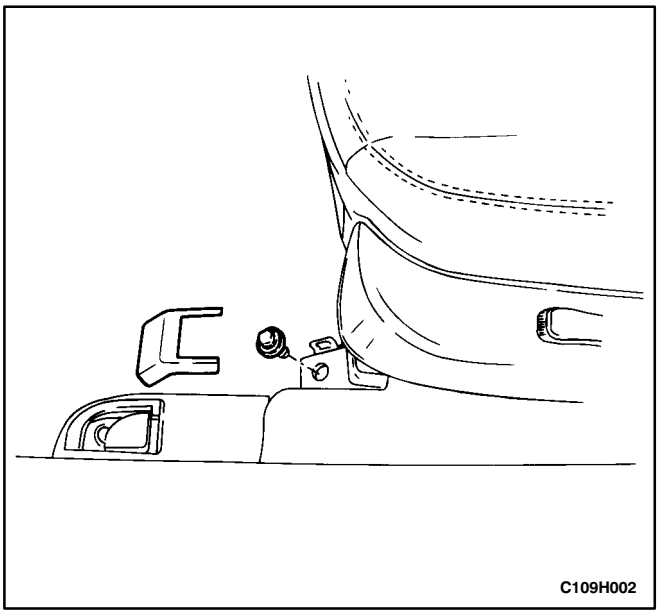

Installation Procedure

1. Install the seat.
2. Connect the electrical connectors.

Notice: Dissimilar metals in direct contact with each other may corrode rapidly. Make sure to use the correct fasteners to prevent premature corrosion.

3. Install the bolts into the front portion of the front seat (power driver seat shown, manual driver seat similar).

   Tighten

   Tighten the front seat-to-floor bolts to 25 N•m (18 lb-ft).
4. Install the plastic caps.

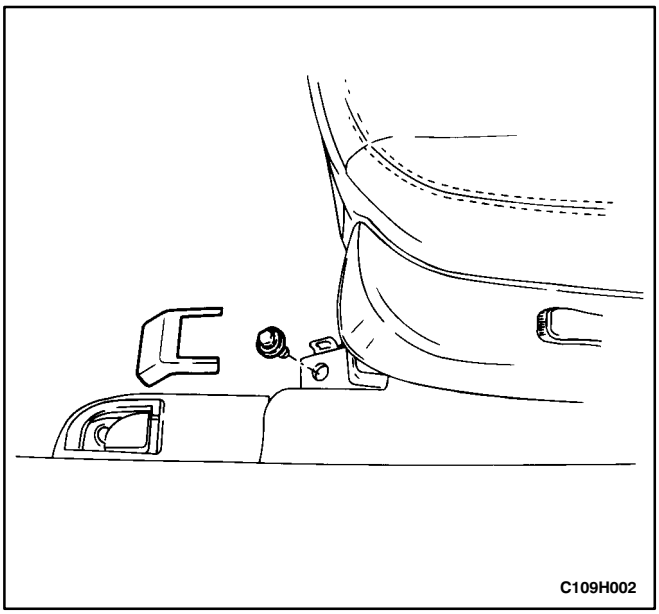

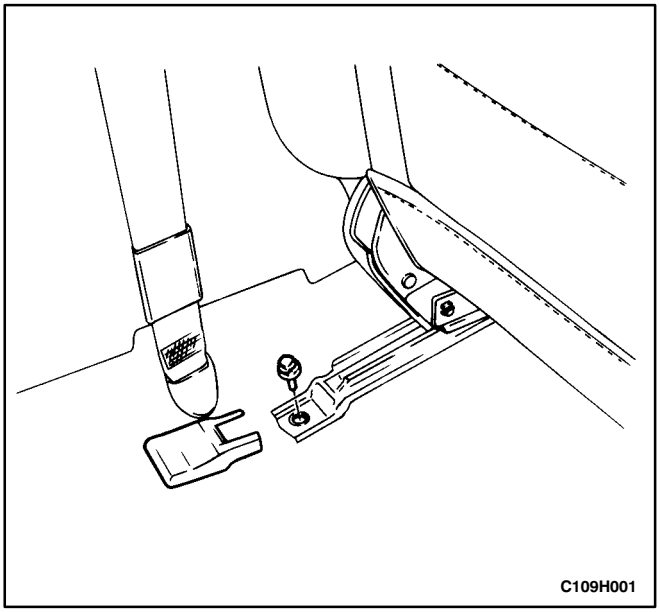

5. Install the bolts into the rear portion of the front seat.

   Tighten

   Tighten the front seat-to-floor bolts to 25 N•m (18 lb-ft).
6. Install the plastic caps.
7. Connect the negative battery cable.

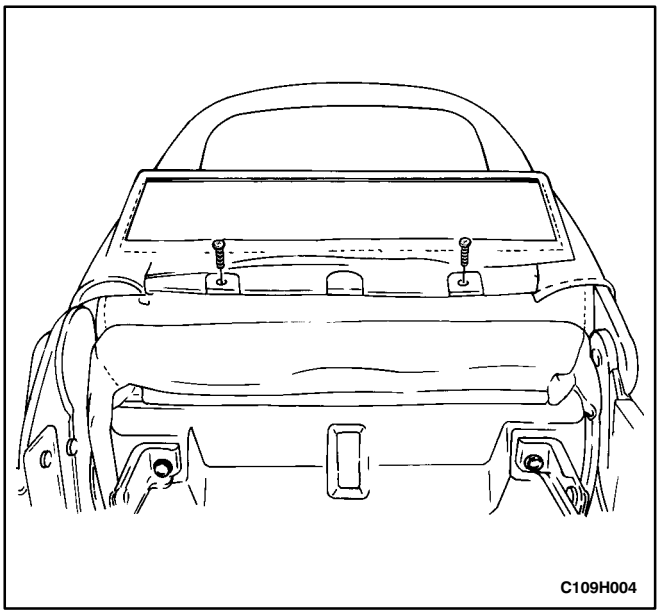

FRONT SEATBACK

Removal Procedure

1. Remove the front bucket seat from the vehicle. Refer to “Front Bucket Seats” in this section.
2. Remove the screws and slide the back panel down to remove.

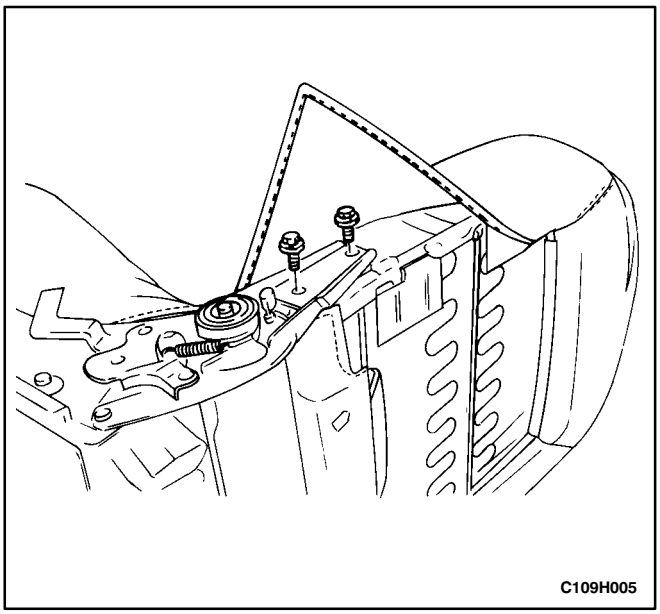

3. Reposition the left side seatback cover.
4. Remove the bolts and the seatback.

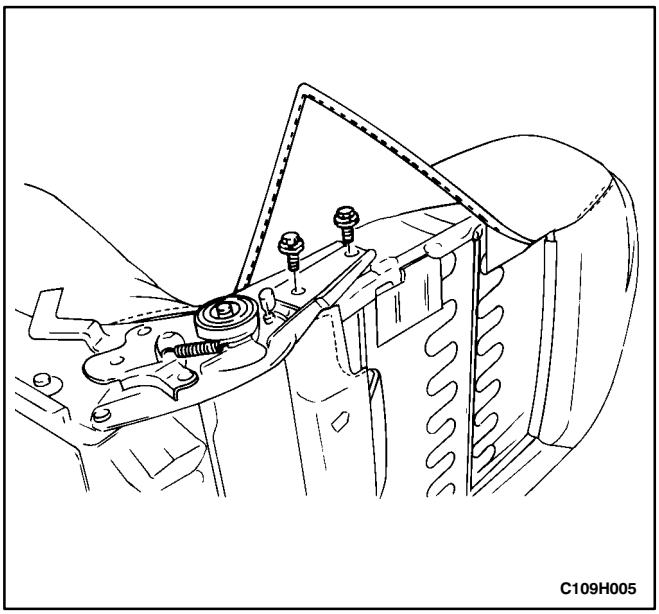

Installation Procedure

1. Install the seatback onto the seat cushion.

Notice: Dissimilar metals in direct contact with each other may corrode rapidly. Make sure to use the correct fasteners to prevent premature corrosion.

2. Install the front seatback bolts.

Tighten

Tighten the front seatback bolts to 45 N•m (33 lb-ft).

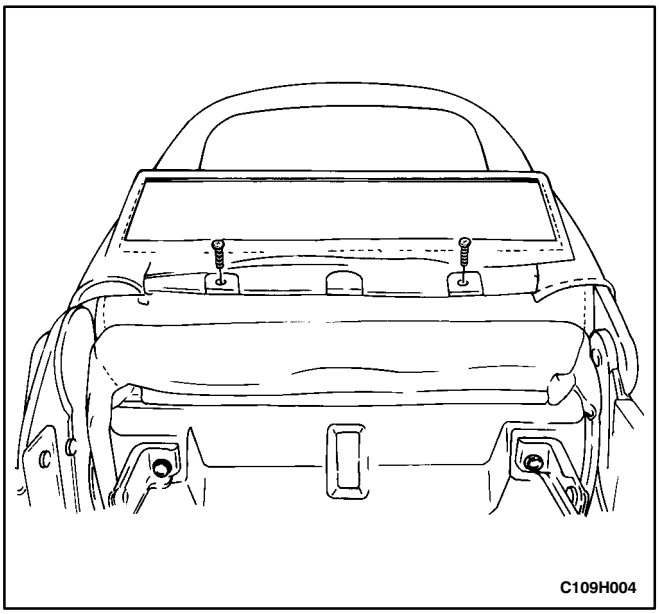

3. Install the seat cover to its original position.
4. Install the back panel onto the seat with the screws.

Tighten

Tighten the front seat cover screws to 12 N•m (106 lb-in).

5. Install the front bucket seat in the vehicle. Refer to “Front Bucket Seats” in this section.

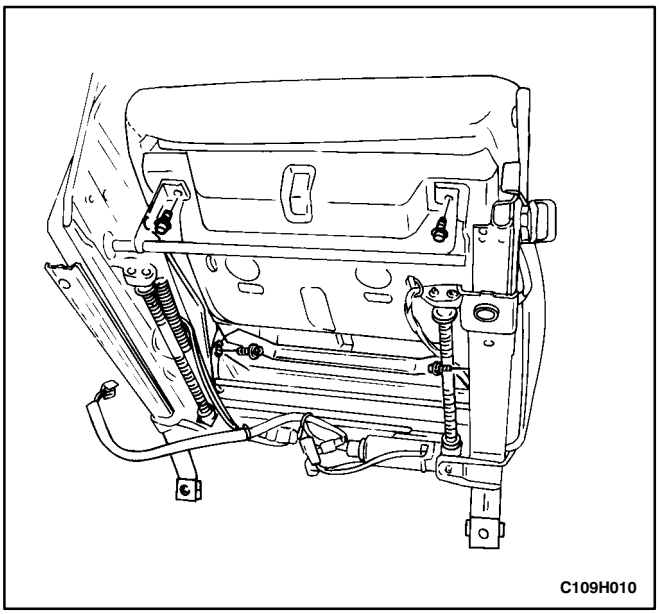

FRONT SEAT CUSHION

Removal Procedure

1. Remove the front seat from the vehicle. Refer to “Front Bucket Seats” in this section.
2. Remove the seat cushion bolts (power driver seat shown, manual driver seat similar).
3. Remove the cushion from the seat track.

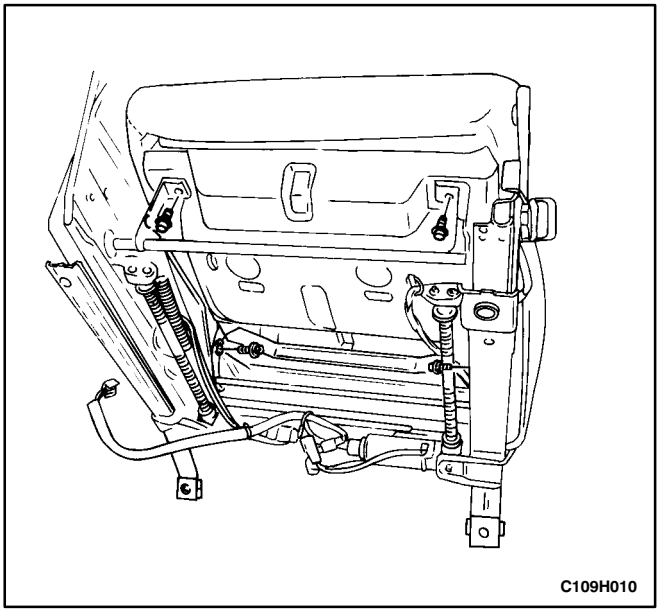

Installation Procedure

1. Install the cushion onto the seat track.

Notice: Dissimilar metals in direct contact with each other may corrode rapidly. Make sure to use the correct fasteners to prevent premature corrosion.

2. Install the seat track to the seat cushion with the bolts (power driver seat shown, manual driver seat similar).

   Tighten

   Tighten the front seat cushion bolts to 12 N•m (106 lb-ft).

3. Install the front seat in the vehicle. Refer to “Front Bucket Seats” in this section.

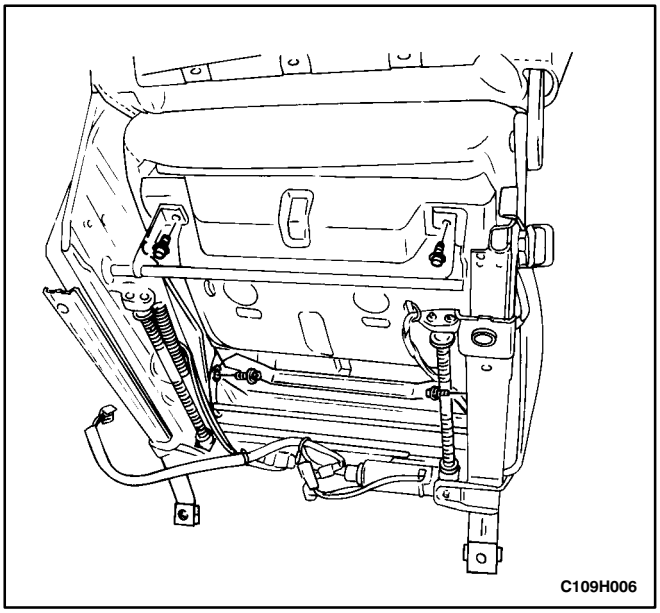

FRONT BUCKET SEAT TRACK

Removal Procedure

1. Remove the seatback. Refer to “Front Seatback” in this section.
2. Remove the seat trim. Refer to “Front Seat Trim” in this section.
3. Remove the seat cushion bolts (power driver seat shown, manual driver seat similar).
4. Remove the seat track from the seat cushion.

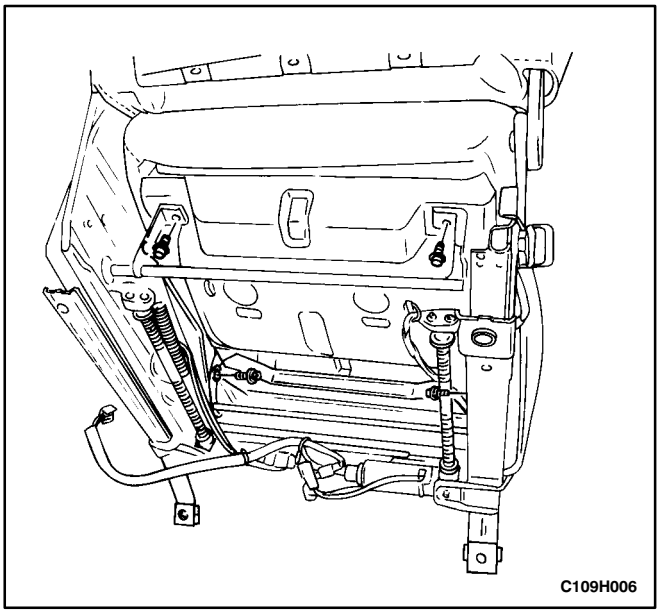

Installation Procedure

1. Install the cushion onto the seat track.

Notice: Dissimilar metals in direct contact with each other may corrode rapidly. Make sure to use the correct fasteners to prevent premature corrosion.

2. Install the seat track to the seat cushion with the seat cushion bolts (power driver seat shown, manual driver seat similar).

   Tighten

   Tighten the front seat cushion bolts to 12 N•m (106 lb-ft).

3. Install the seat trim. Refer to “Front Seat Trim” in this section.
4. Install the seatback. Refer to “Front Seatback” in this section.

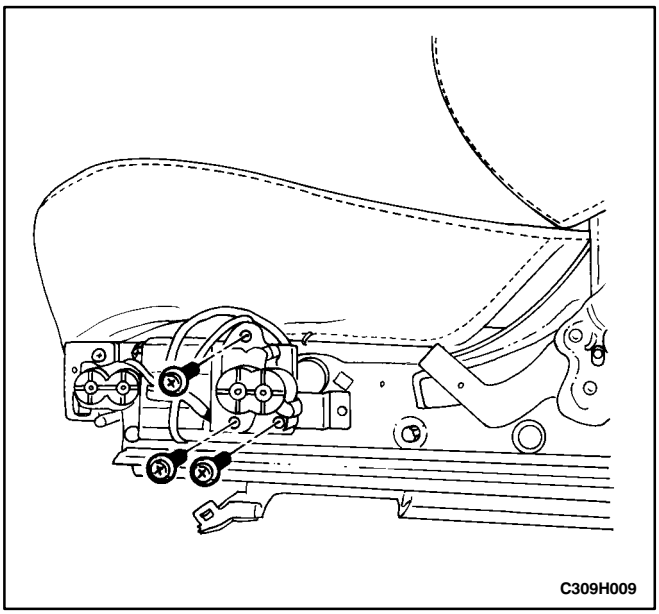

POWER DRIVER SEAT TILT MOTORS

Removal Procedure

1. Remove the driver seat. Refer to “Front Bucket Seat” in this section.
2. Remove the front seat trim. Refer to “Front Seat Trim” in this section.
3. Remove the bolts and the motor.

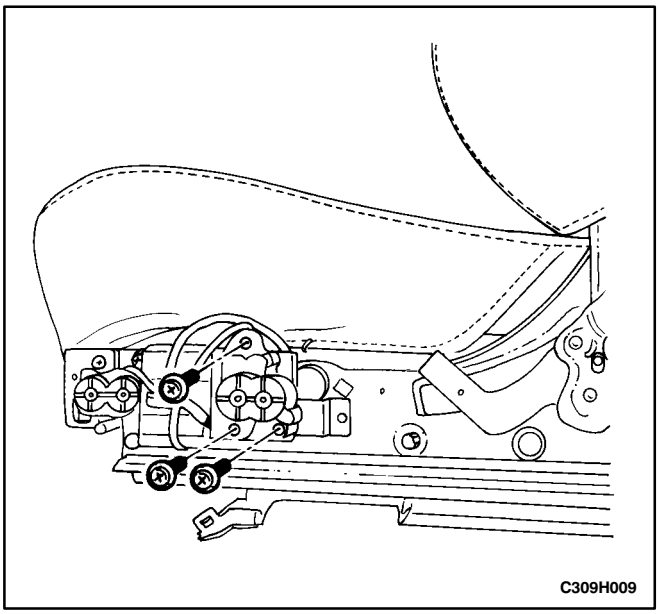

Installation Procedure

Notice: Dissimilar metals in direct contact with each other may corrode rapidly. Make sure to use the correct fasteners to prevent premature corrosion.

1. Install the motor with the bolts (front motor shown).

   ### Tighten

   Tighten the tilt motor bolts to 13 N•m (115 lb-in).
2. Install the front seat trim. Refer to “Front Seat Trim” in this section.
3. Install the driver seat. Refer to “Front Bucket Seat” in this section.

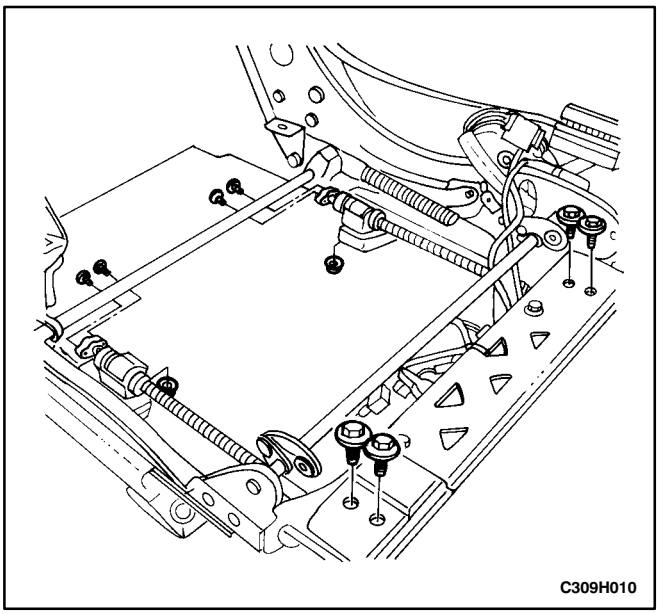

POWER DRIVER SEAT SLIDE ASSEMBLY

Removal Procedure

1. Remove the driver seat. Refer to “Front Bucket Seat” in this section.
2. Remove the front seat cushion. Refer to “Front Seat Cushion” in this section.
3. Disconnect the electrical connector.
4. Remove the bolts, the nuts, the screws, and the slide assembly.

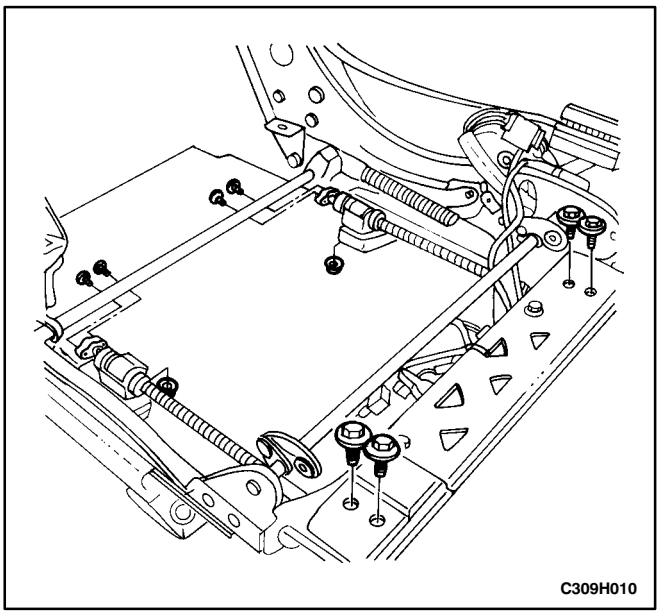

Installation Procedure

Notice: Dissimilar metals in direct contact with each other may corrode rapidly. Make sure to use the correct fasteners to prevent premature corrosion.

1. Install the slide assembly with the bolts, the nuts, and the screws.

   Tighten

   Tighten the slide assembly bolts to 25 N•m (18 lb-ft).

   Tighten the slide assembly nuts to 15 N•m (11 lb-ft).

   Tighten the slide assembly screws to 10 N•m (89 lb-in).
2. Connect the electrical connector.
3. Install the front seat cushion. Refer to “Front Seat Cushion” in this section.
4. Install the driver seat. Refer to “Front Bucket Seat” in this section.

SEAT RECLINER LEVER

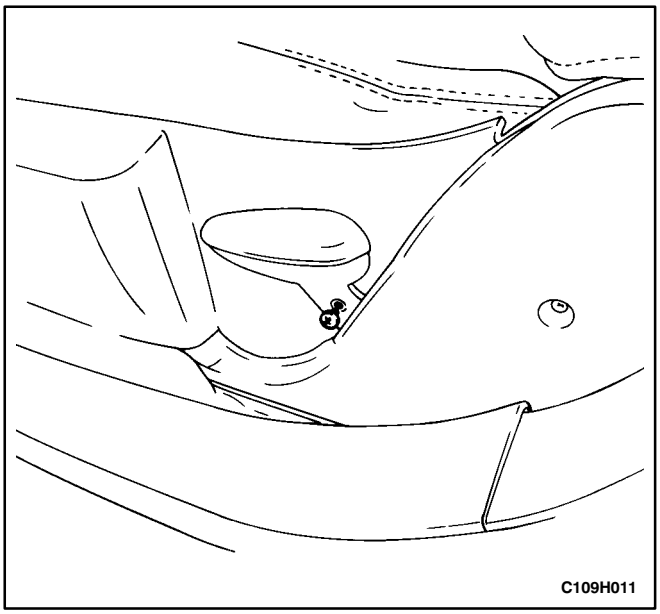

Removal Procedure

1. Remove the screw and the seat recliner lever (power driver seat shown, manual driver seat similar).

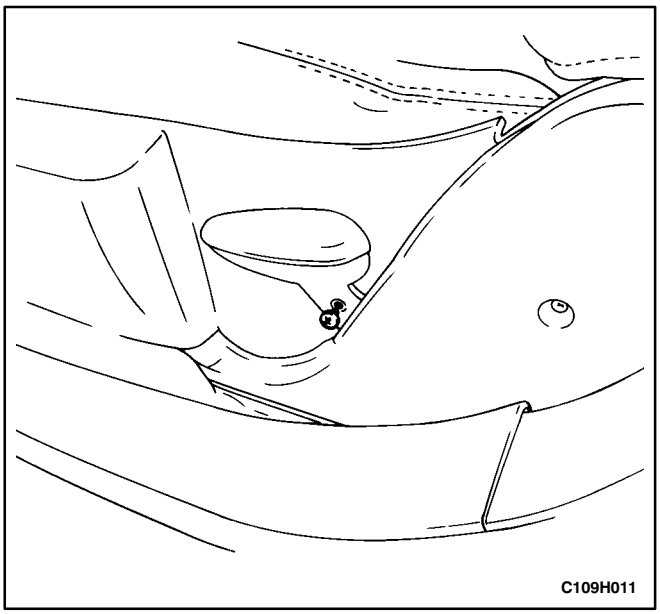

Installation Procedure

Notice: Dissimilar metals in direct contact with each other may corrode rapidly. Make sure to use the correct fasteners to prevent premature corrosion.

1. Install the seat recliner lever with the screw (power driver seat shown, manual driver seat similar).

   Tighten

   Tighten the seat recliner lever screw to 12 N•m (106 lb-in).

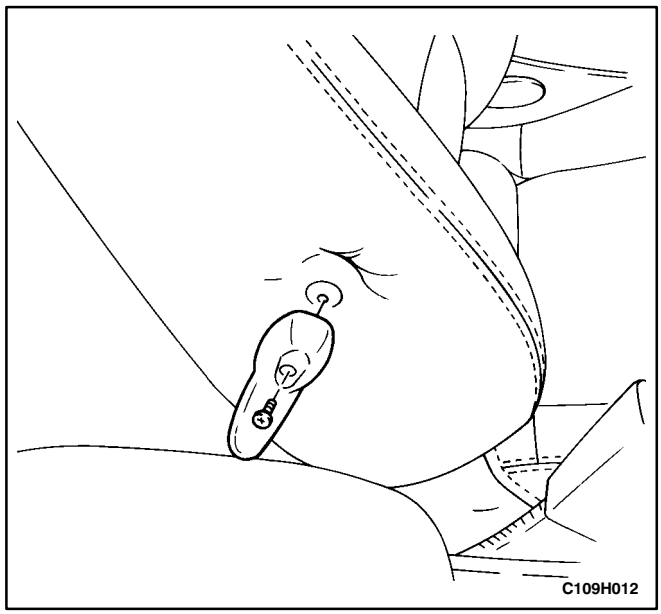

LUMBAR SUPPORT LEVER

Removal Procedure

1. Remove the screw and the lumbar support lever.

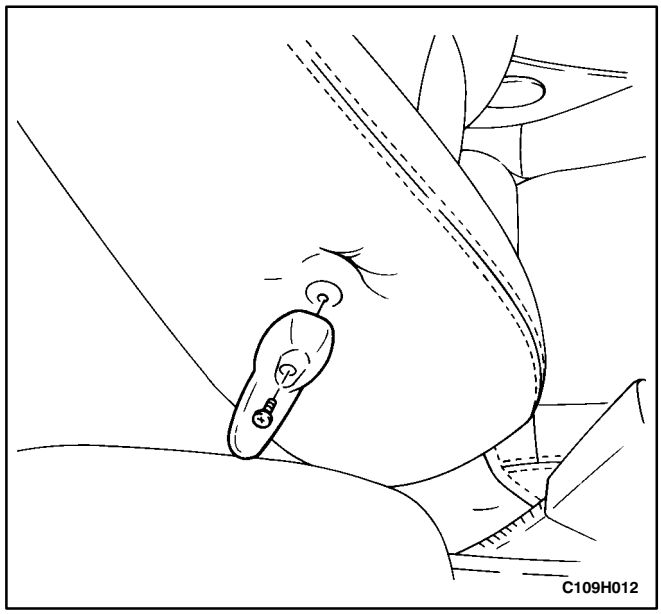

Installation Procedure

Notice: Dissimilar metals in direct contact with each other may corrode rapidly. Make sure to use the correct fasteners to prevent premature corrosion.

1. Install the lumbar support lever with the screw.

Tighten

Tighten the lumbar support lever screw to 10 N•m (89 lb-in).

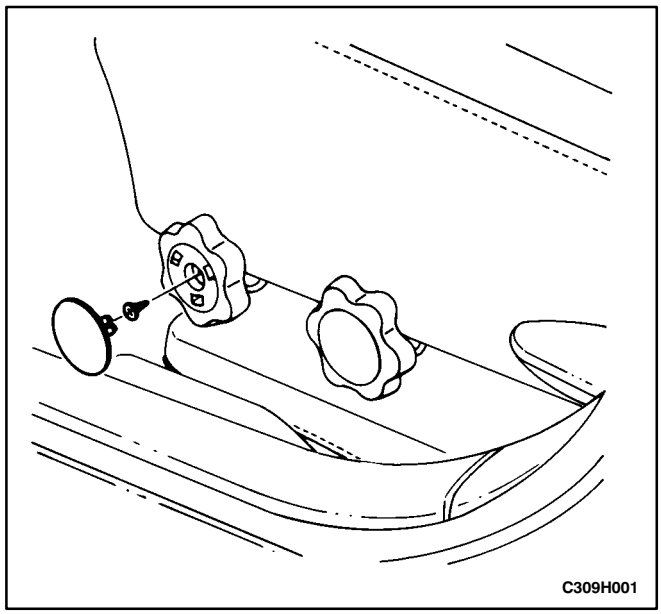

HEIGHT ADJUSTMENT KNOBS

(Left–Hand Drive Shown, Right–Hand Drive Similar)

Removal Procedure

1. Remove the cap to reveal the screw.
2. Remove the screw and the height adjustment knob (front knob shown).

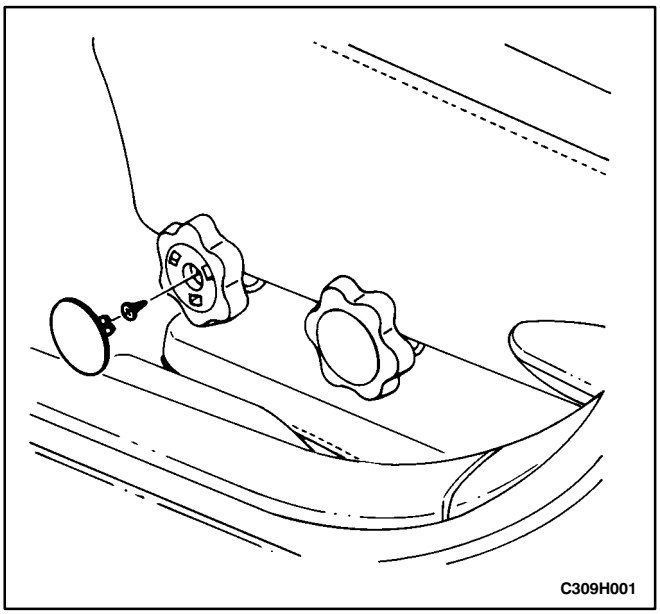

Installation Procedure

Notice: Dissimilar metals in direct contact with each other may corrode rapidly. Make sure to use the correct fasteners to prevent premature corrosion.

1. Install the height adjustment knob with the screw (front knob shown).

   Tighten

   Tighten the height adjustment knob screw to 2 N•m (18 lb-in).
2. Install the cap onto the height adjustment knob.

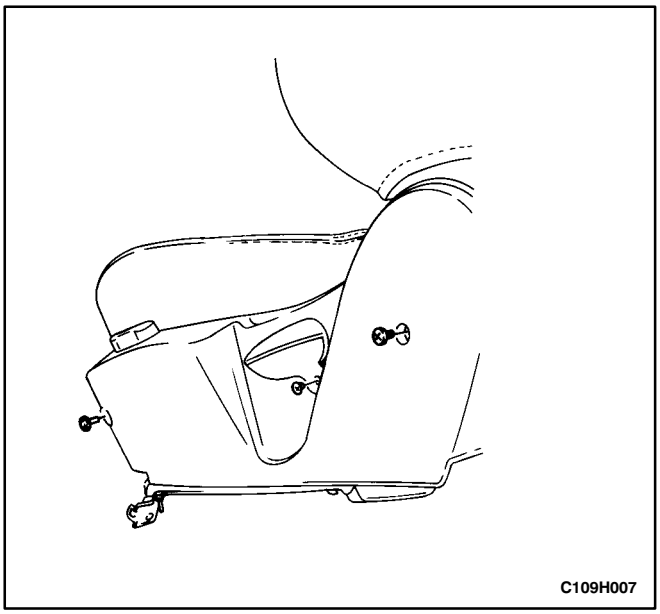

FRONT SEAT TRIM

Removal Procedure

1. Remove the front bucket seat from the vehicle. Refer to “Front Bucket Seats” in this section.
2. Remove the screw and the recliner lever (power driver seat shown, manual driver seat similar).
3. Remove the screws and the front seat trim.

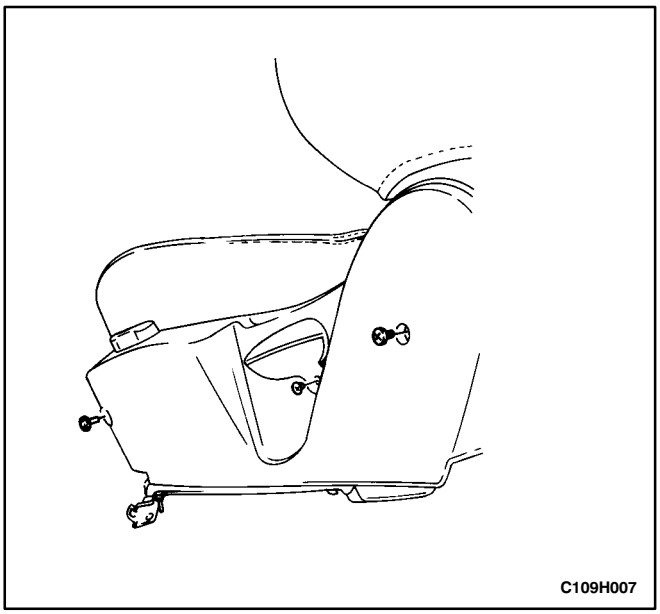

Installation Procedure

Notice: Dissimilar metals in direct contact with each other may corrode rapidly. Make sure to use the correct fasteners to prevent premature corrosion.

1. Install the front seat trim with the screws.

   Tighten

   Tighten the front seat trim screws to 12 N•m (106 lb-in).
2. Install the recliner lever with the screw (power driver seat shown, manual driver seat similar).

   Tighten

   Tighten the seat recliner lever screw to 12 N•m (106 lb-in).
3. Install the front bucket seat in the vehicle. Refer to “Front Bucket Seats” in this section.

HEAD RESTRAINT

Removal Procedure

1. Press in the head restraint adjust button and remove the head restraint from the seatback.

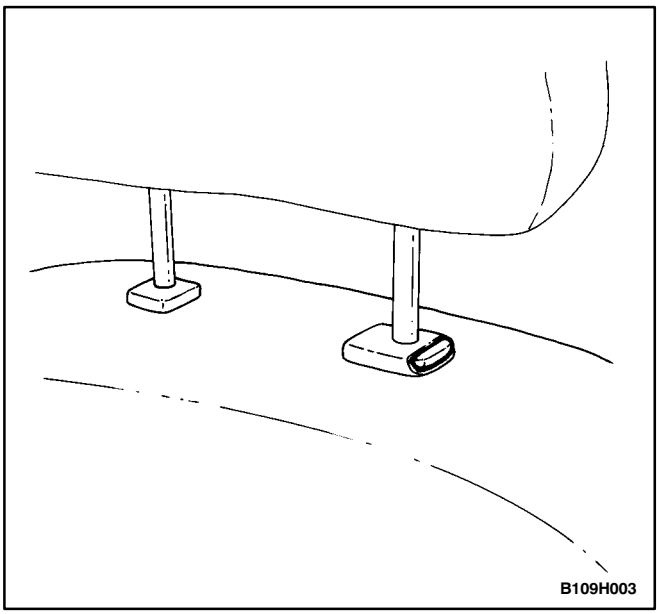

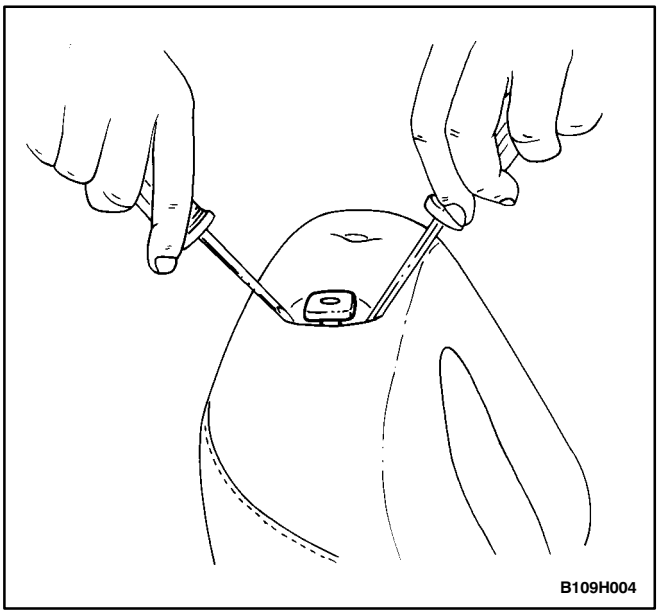

2. Insert two flat head screwdrivers down the front and back side of the guide sleeves.
3. With the screwdrivers, press in the retaining latches and remove the guide sleeves.

Installation Procedure

1. Install the guide sleeves into the seatback and press them down in order to engage the guide sleeve retaining latches.
2. Install the head restraint into the guide sleeves.

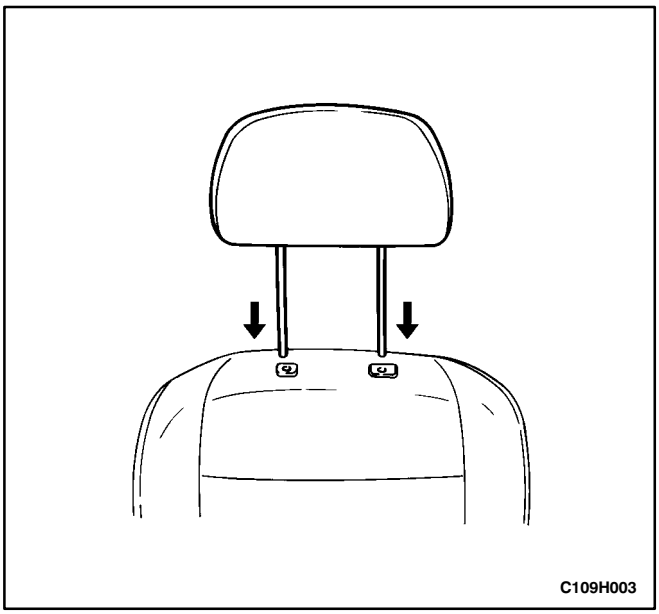

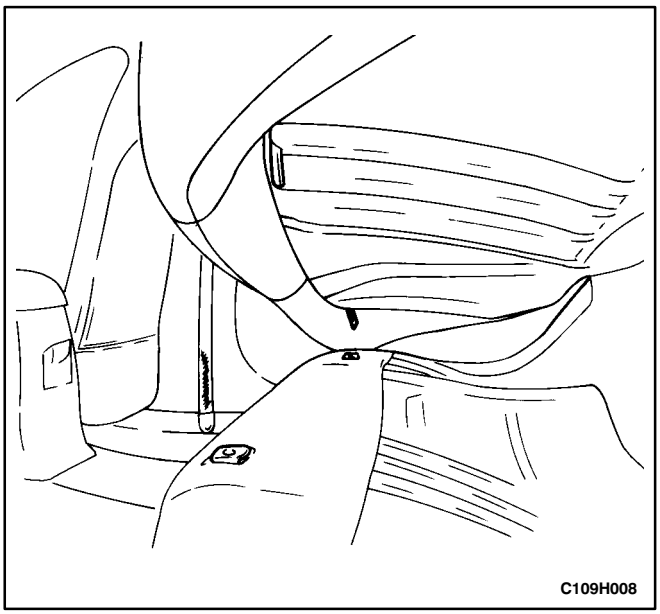

REAR SEAT CUSHION

Removal Procedure

1. Remove the rear seat cushion from the floor by lifting it off the retaining brackets and sliding it forward.

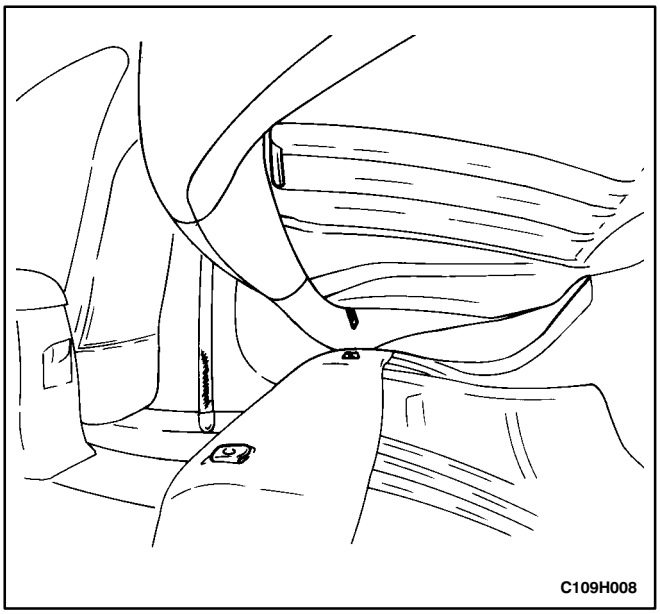

Installation Procedure

1. Install the rear seat cushion by inserting the metal loops into the rear retaining brackets and pressing the front of the seat cushion down.

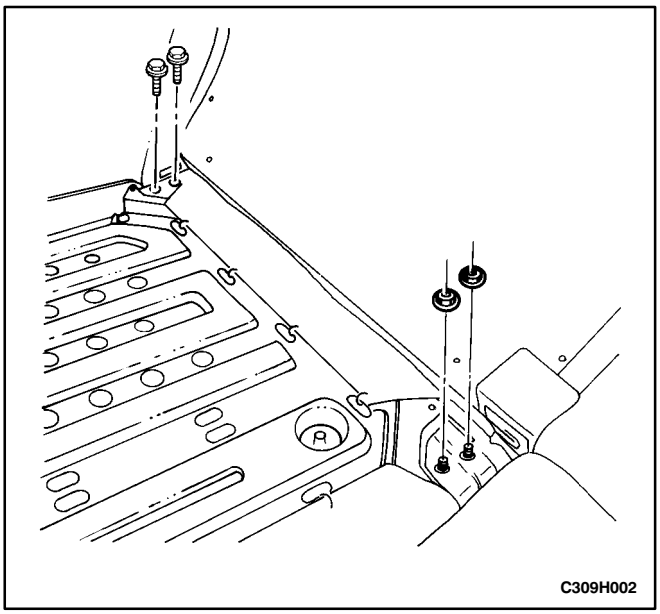

SPLIT REAR SEATBACK

Removal Procedure

1. Lower the rear seatbacks.
2. Remove the retaining clips and reposition the rear seatback backside cover.
3. Remove the nuts, the bolts, and the seatback from the hinges.

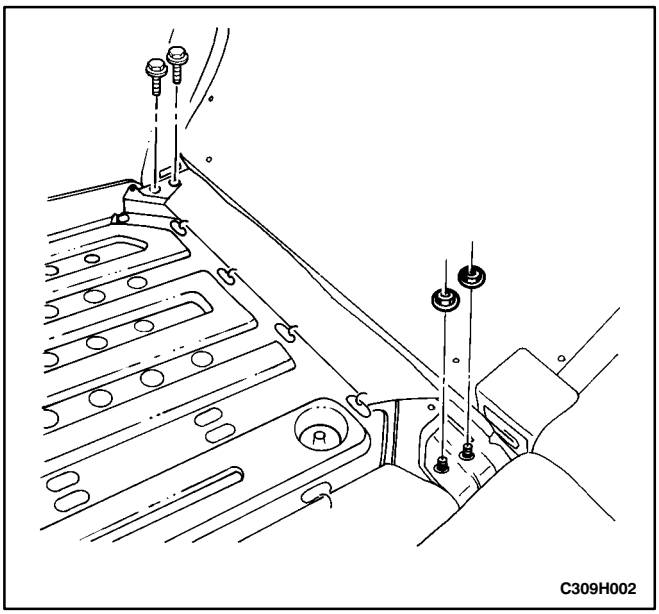

Installation Procedure

Notice: Dissimilar metals in direct contact with each other may corrode rapidly. Make sure to use the correct fasteners to prevent premature corrosion.

1. Install the seatback to the hinges with the bolts and the nuts.

   Tighten

   Tighten the rear seatback bolts to 25 N•m (18 lb-ft).

   Tighten the rear seatback nuts to 25 N•m (18 lb-ft).
2. Install the rear seatback backside cover with the retaining clips.
3. Raise and secure the rear seatbacks in the upright position.

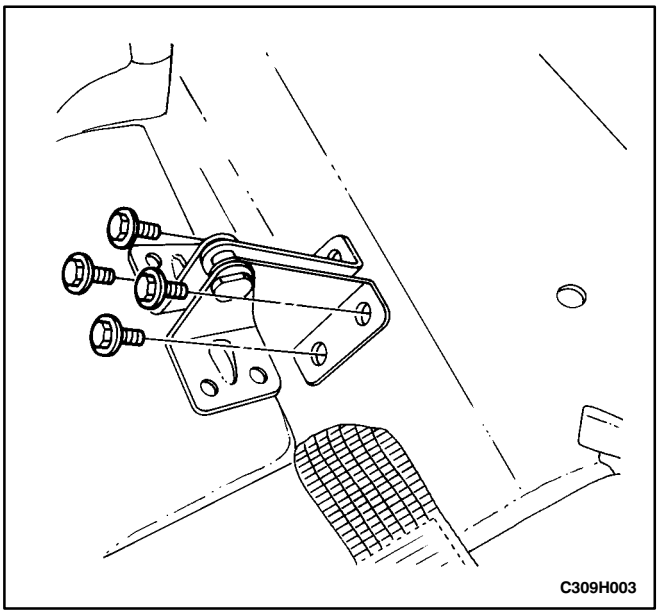

SPLIT REAR SEATBACK HINGE

Removal Procedure

1. Remove the rear seatback and the rear seat cushion. Refer to “Split Rear Seatback” and “Rear Seat Cushion” in this section.
2. Remove the bolts and the seatback center hinge.

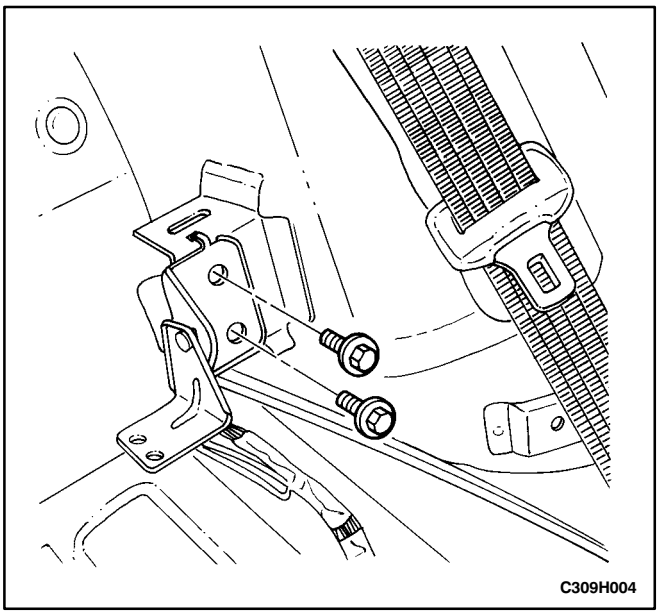

4. Remove the rear seat side bolster cushion. Refer to “Rear Seat Side Bolster Cushion” in this section.
5. Remove the bolts and the seatback outer hinge.

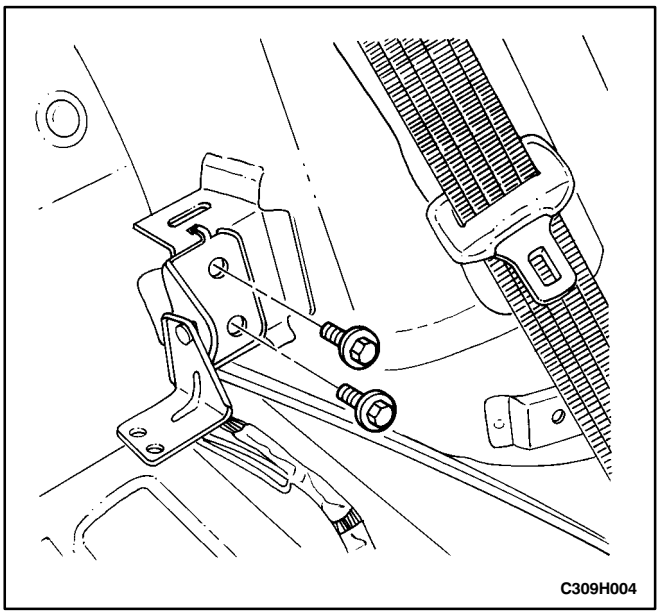

Installation Procedure

Notice: Dissimilar metals in direct contact with each other may corrode rapidly. Make sure to use the correct fasteners to prevent premature corrosion.

1. Install the seatback outer hinge with the bolts.

   Tighten

   Tighten the rear seat hinge bolts to 12 N•m (106 lb-in).

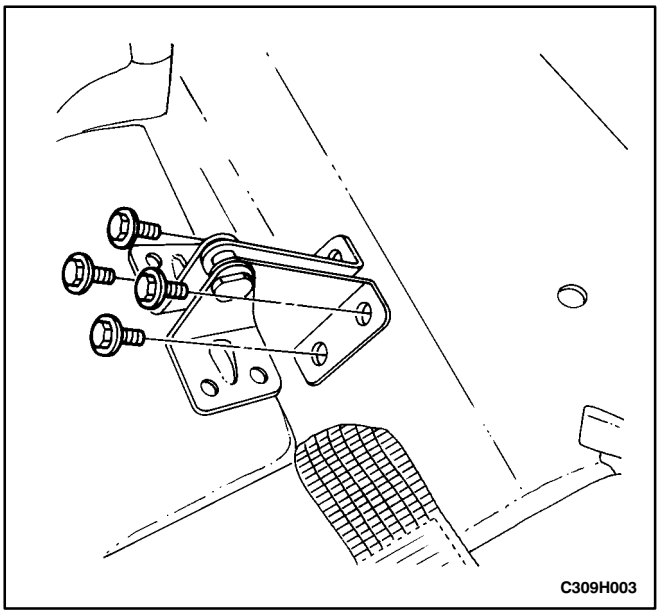

2. Install the rear seat side bolster cushion. Refer to “Rear Seat Side Bolster Cushion” in this section.
3. Install the seatback center hinge with the bolts.

   Tighten

   Tighten the rear seat hinge bolts to 12 N•m (106 lb-in).
4. Install the rear seatback and the rear seat cushion. Refer to “Split Rear Seatback” and “Rear Seat Cushion” in this section.

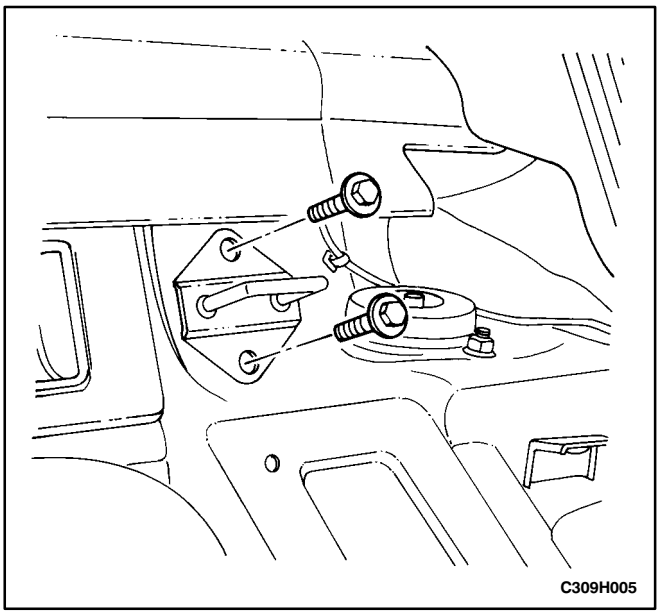

SPLIT REAR SEATBACK LOCK STRIKER

Removal Procedure

1. Lower the rear seatbacks.
2. Remove the rear seat side bolster cushion. Refer to “Rear Seat Side Bolster Cushion” in this section.
3. Remove the retaining clips and the back panel trim cover.
4. Remove the bolts and the seatback lock strikers.

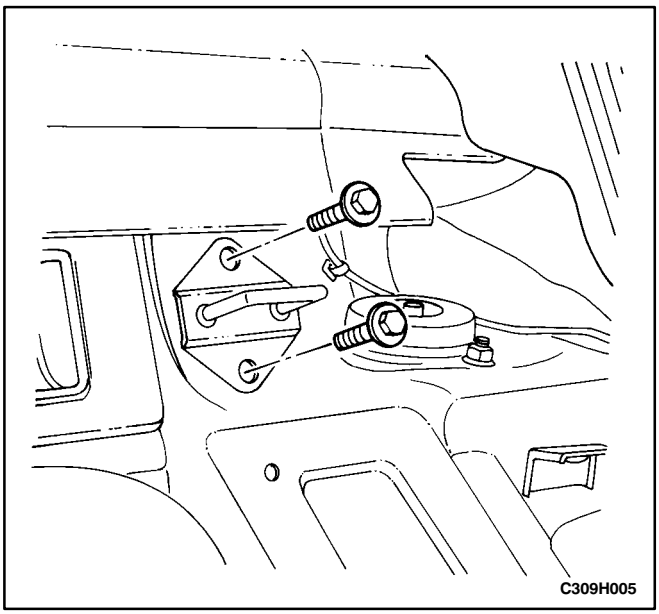

Installation Procedure

Notice: Dissimilar metals in direct contact with each other may corrode rapidly. Make sure to use the correct fasteners to prevent premature corrosion.

1. Install the seatback lock strikers with the bolts.

   Tighten

   Tighten the rear seatback lock striker bolts to 25 N•m (18 lb-ft).
2. Install the back panel trim cover with the retaining clips.
3. Install the rear seat side bolster cushion. Refer to “Rear Seat Side Bolster Cushion” in this section.
4. Raise and secure the rear seatbacks in the upright position.

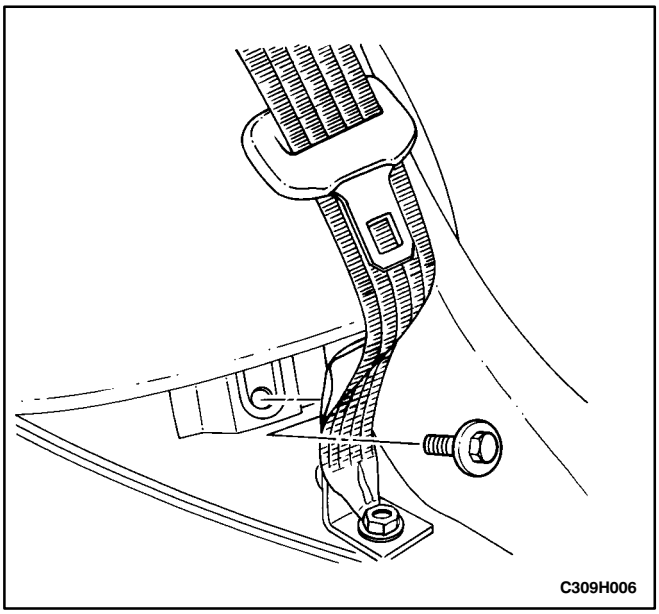

REAR SEAT SIDE BOLSTER CUSHION

Removal Procedure

1. Remove the rear seat cushion. Refer to “Rear Seat Cushion” in this section.
2. Remove the bolt securing the rear seat side bolster cushion.
3. Lift and remove the rear seat side bolster cushion.

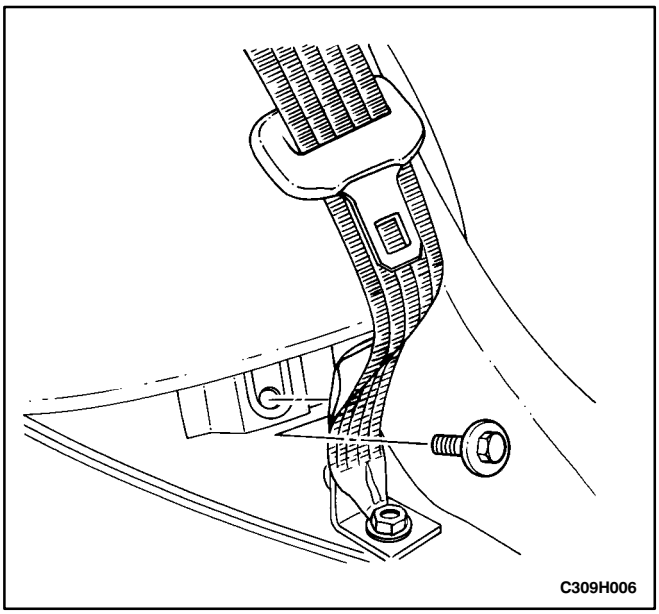

Installation Procedure

1. Slide the rear seat side bolster cushion into the retaining brackets.

Notice: Dissimilar metals in direct contact with each other may corrode rapidly. Make sure to use the correct fasteners to prevent premature corrosion.

2. Install the rear seat side bolster cushion with the bolt.

   Tighten

   Tighten the rear seat side bolster cushion bolts to 25 N•m (18 lb-ft).
3. Install the rear seat cushion. Refer to “Rear Seat Cushion” in this section.

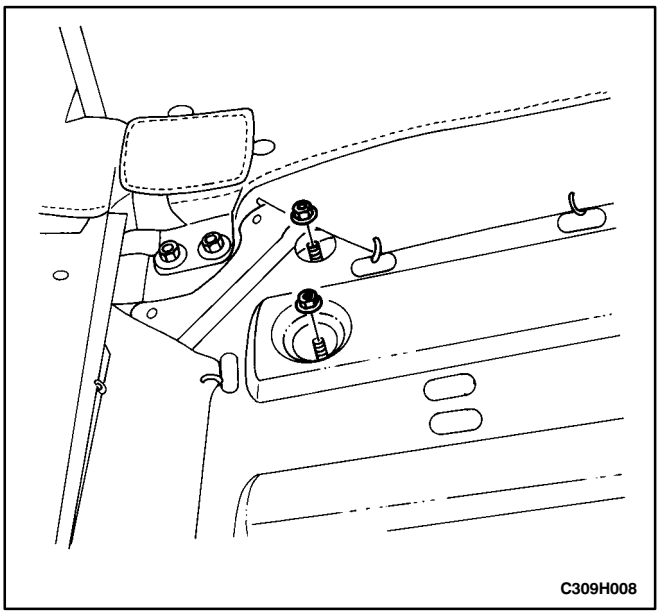

REAR SEAT CENTER ARMREST

Removal Procedure

1. Lower the rear seatbacks.
2. Remove the retaining clips and reposition the rear seatback backside cover.
3. Remove the nuts and the armrest.

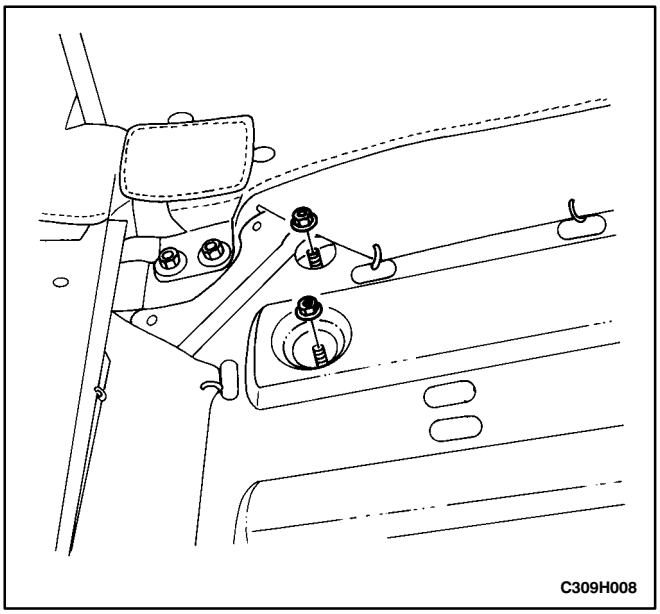

Installation Procedure

Notice: Dissimilar metals in direct contact with each other may corrode rapidly. Make sure to use the correct fasteners to prevent premature corrosion.

1. Install the armrest with the nuts.

   Tighten

   Tighten the armrest nuts to 12 N•m (106 lb-in).
2. Install the rear seatback backside cover with the retaining clips.
3. Raise and secure the rear seatbacks in the upright position.

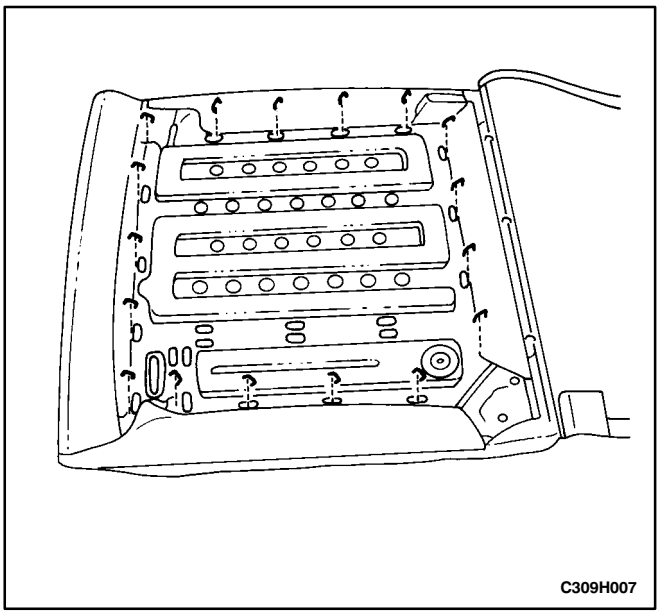

SEAT COVERS

Removal Procedure

1. Remove the seatback and/or cushion. Refer to “Front Seatback,” “Front Seat Cushion,” “Split Rear Seatback,” and/or “Rear Seat Cushion” in this section.
2. Remove the hog rings from the seatback and/or cushion.
3. Remove the seat cover from the seatback and/or cushion.

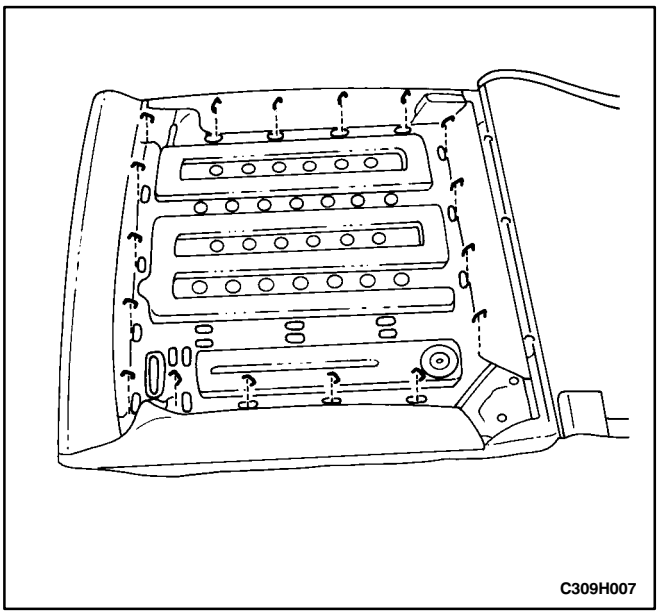

Installation Procedure

1. Install the seat cover onto the seatback and/or cushion with new hog rings.
2. Install the seatback and/or seat cushion. Refer to “Front Seatback,” “Front Seat Cushion,” “Split Rear Seatback,” and/or “Rear Seat Cushion” in this section.

GENERAL DESCRIPTION AND SYSTEM OPERATION

SEATS

Important: Do not attempt to change the designed seat position by altering the designed seat adjuster-to-floor pan anchor provisions or the seat adjuster-to-seat frame anchor provisions. Changing seat position could affect the performance of the seat system.

This vehicle is equipped with front bucket seats with separate, adjustable head restraints and a three-passenger rear seat. Seat cushions and back have formed foam pads, which fit the contours of the full panel seatback frame assembly and also the designed contour of the seat cushion frame. The front bucket seats also have a recline, a height, and a lumbar adjustment.

SECTION 9I

WATERLEAKS

TABLE OF CONTENTS

Specifications 9I-1
Recommended Materials for Waterleak Repairs 9I-1
Watertest Stand Specifications 9I-1
Diagnosis 9I-2
Waterleak Diagnosis 9I-2
Maintenance and Repair 9I-5
On-Vehicle Service 9I-5
Waterleak Repair 9I-5

SPECIFICATIONS

RECOMMENDED MATERIALS FOR WATERLEAK REPAIRS

Leak Areas	Repair Materials
Windshield, back window	Urethane adhesive, caulking kit, or the equivalent
Metal joints	Brushable seam sealer which can be painted
Ventilation ducts	3M™ Auto Bedding and Glazing Compound or the equivalent
Small cracks and pin holes	3M™ Drip-Check Sealer or the equivalent
Large holes	3M™ Automotive Joint and Seam Sealer
Weatherstrips	3M™ 08011 Weatherstrip Adhesive or the equivalent
Bolts, studs, and screws	Strip caulk

WATERTEST STAND SPECIFICATIONS

Application	Description
Nozzle Type	Full jet spray nozzle #1/2 GG-25 or equivalent with a 60° included angle
Nozzle Height	Approximately 1-600 mm (63.0 in.) from the floor
Volume of Flow	14L (3.7 gal) per minute
Pressure	155 kPa (22.5 psi) measured at the nozzle
Windshield and A-Pillar Test Stand Position	Approximately 30° down, 45° toward the rear, and aimed at the corner of the windshield
B-Pillar Test Stand Position	Approximately 30° down, 45° toward the rear, and aimed at the center of the rear door
Back Window and Rear Deck Lid Test Stand Position	Approximately 30° down, 30° toward the front and aimed approximately 610 mm (24.0 in.) from the corner of the back window

DIAGNOSIS

WATERLEAK DIAGNOSIS

The repair of waterleaks in the body requires proper testing and diagnosis. Repair waterleaks by adjusting the misaligned parts and using the proper repair materials. First, determine what conditions cause the leak. For example, the leak may occur only when the vehicle is parked on an incline, or water may appear only in the spare tire compartment. Second, test the area for the source of the leak using the following testing methods. If the general leak area is found, determine the exact entry point of the leak by using a water hose or an air hose. If the general leak area is not obvious, use the watertest stands to determine the area of the leak. It may be necessary to remove some interior trim panels or some parts in order to locate the leaks.

Important: It is necessary to find the origin of all the leaks before making any repairs. Random repairs may stop the leak only temporarily and may make future repairs more difficult. Continue localized testing in the general area in order to ensure that all leaks are found.

Generalized Testing

1. Set up the watertest stands.

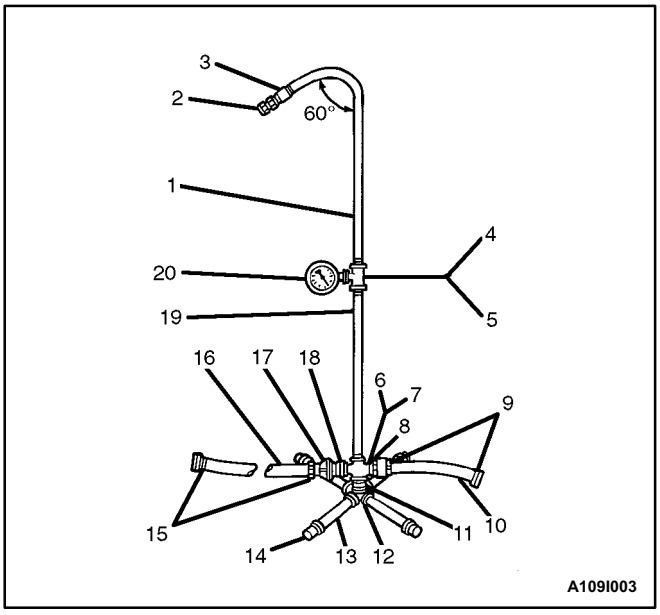

1 1/2-inch by 36-inch Pipe
2 Full-jet Spray Nozzle #1/2 GG-25 or Equivalent Nozzle Height at 1,600 mm to the Floor
3 1/2-inch Coupling
4 1/2-inch by 1/2-inch by 1/4-inch Reducing T (Right Only)
5 1/2-inch Coupling (Left Only)
6 1/2-inch Cross (Right Only)
7 1/2-inch Tee (Left Only)
8 1/2-inch Pipe-to-Hose Nipple (Right Only)
9 5/8-inch Female Hose Coupling
10 5/8-inch Input Hose (2 Feet Long, Right Only)
11 1/2-inch Close Nipple
12 1/2-inch Cross with Weld-on 1/2-inch Cap
13 1/2-inch by 12-inch Nipple
14 1/2-inch Cap
15 5/8-inch Female Hose Coupling
16 5/8-inch Cross Hose (12 Feet Long)
17 5/8-inch Hose Quick Connect
18 1/2-inch Pipe-to-Hose Nipple
19 1/2-inch by 30-inch Pipe (Straight)
20 1/4-inch Water Pressure Gauge (Right Only)

2. Set up the watertest stand leak test.

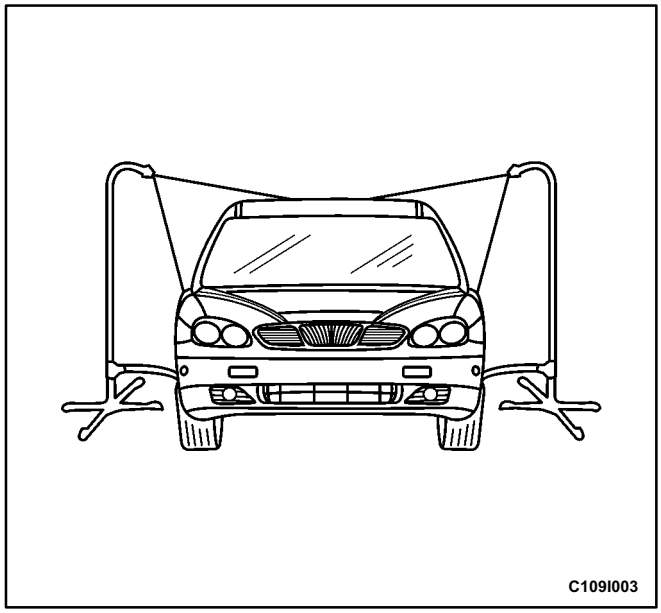

3. Perform the watertest stand leak test. Refer to "Watertest Stand Specifications" in this section.
4. If the local water pressure does not allow the required water pressure of 155 kPa (22.5 psi), move both stands closer to the vehicle so that the water spray overlaps.

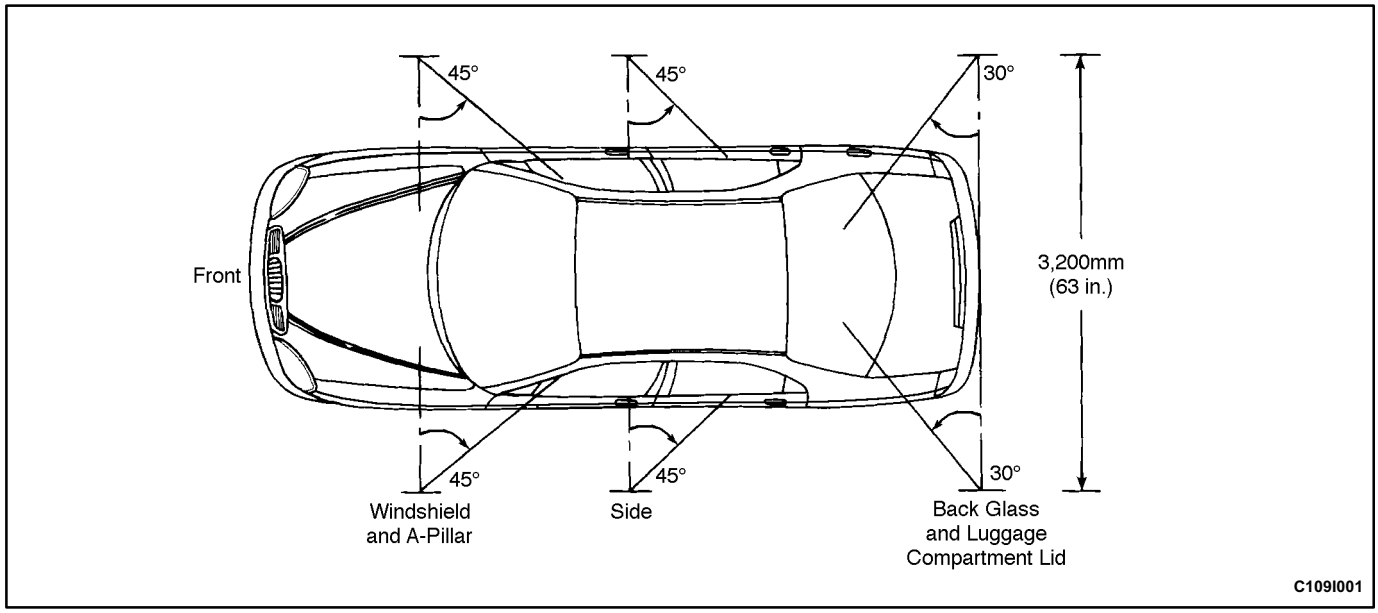

Localized Testing (Spot Test)

1. Do localized testing with a water hose or an air hose.
2. Begin testing by spraying the air or the water at the base of the suspected leak area. Continue spraying the air or the water upward until the leak is found.

Water Hose Test

1. Place another person inside the vehicle in order to detect the location of the leak.
2. Use a water hose without a nozzle.

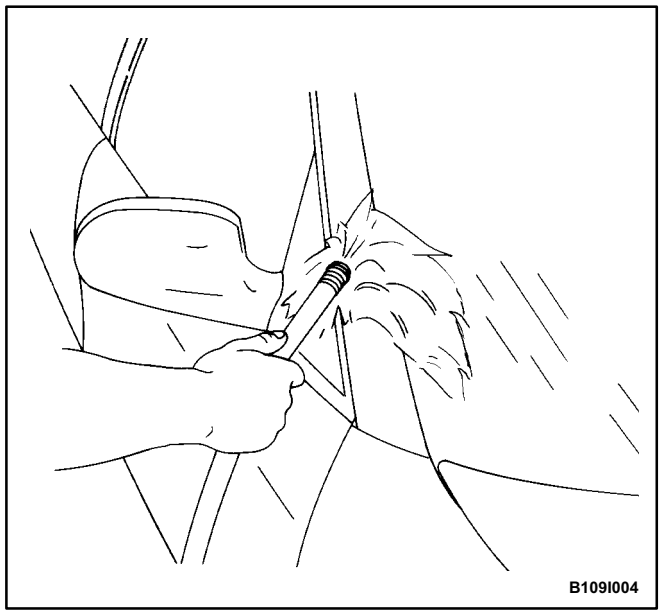

3. Begin spraying the water at the base of the suspected leak area. Continue spraying the water upward until the leak is found.

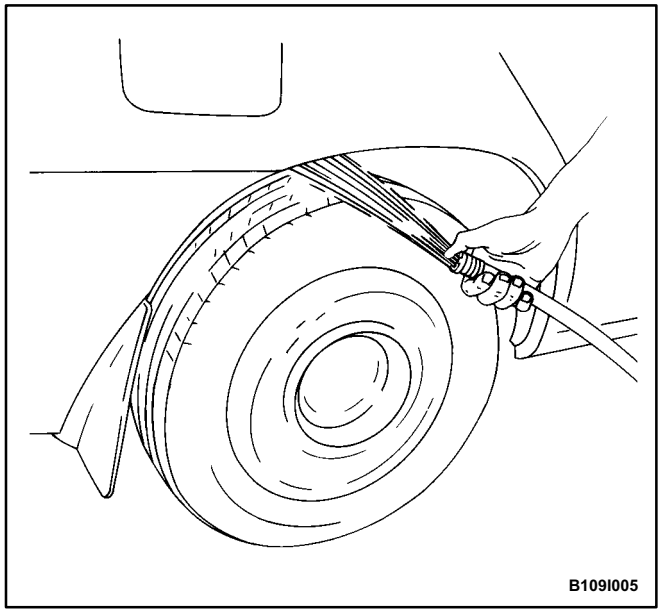

Air Hose Test

1. Apply soapy water to the outside of the vehicle in the suspected leak area.
2. Blow air from inside the vehicle. The air pressure should not exceed 205 kPa (29.7 psi).
3. Determine the location of the leaks from the bubbles formed in the soapy water.

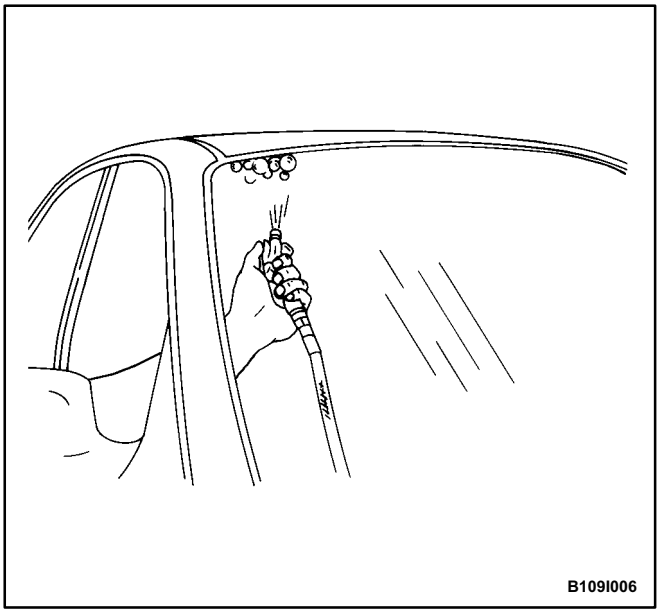

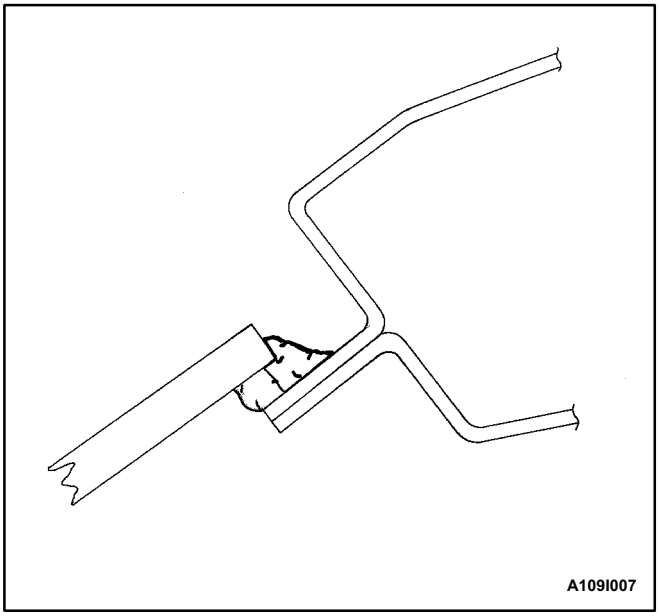

MAINTENANCE AND REPAIR

ON-VEHICLE SERVICE

WATERLEAK REPAIR

Some waterleaks around the glass can be repaired without removing the glass.

Important: This type of repair may be used only for urethane-installed glass.

1. Remove the reveal molding in the area of the leak. It may be necessary to remove the garnish molding or the trim strip lace in order to locate the leak.
2. While spraying water over the leak area, carefully push the glass outward in order to determine the size of the leak.
3. Mark the location of the leak.
4. Use water to clean any dirt from the area. Dry the area with an air hose.
5. Using a sharp knife, trim off the uneven edges of the adhesive caulking material around the leak for a distance of 75 to 100 mm (3 to 4 inches) on both sides of the leak.

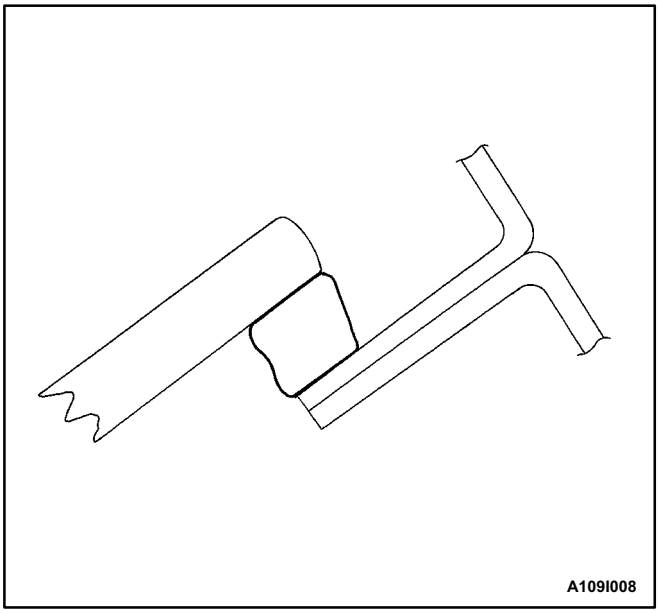

6. Using a sharp knife, trim off the uneven edges of the adhesive material around the leak 75 to 100 mm (3-to-4 inches) on both sides of the leak.

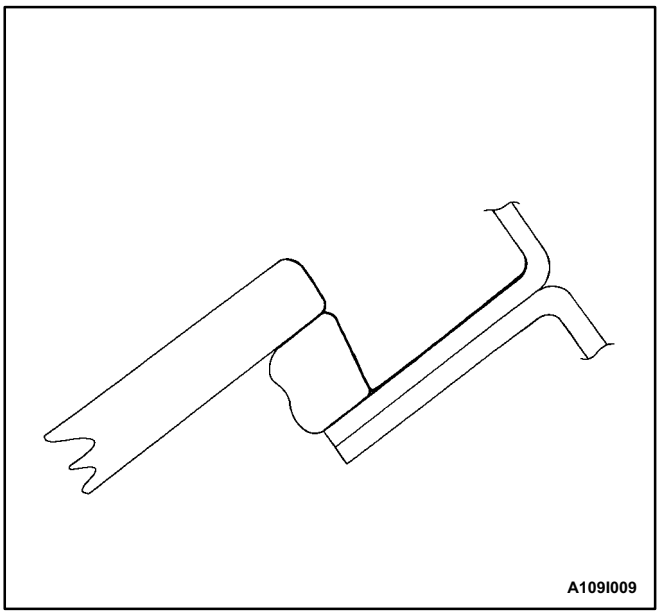

7. Prime the trimmed area with the primer.

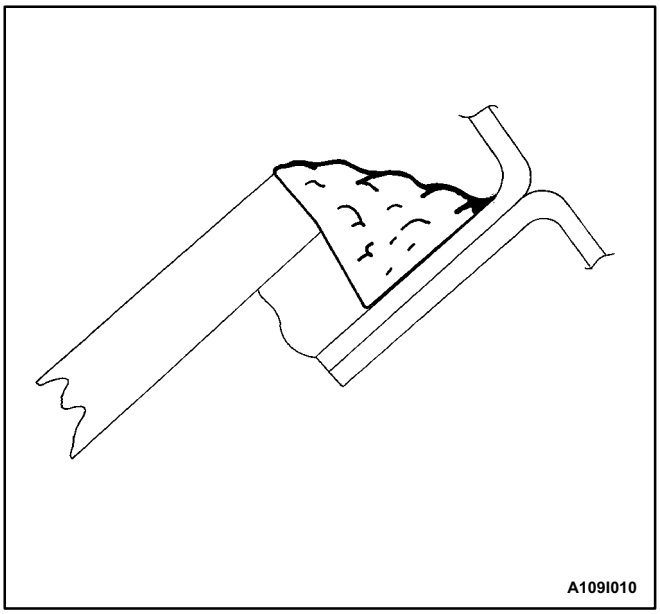

8. Allow the primer to dry for 5 minutes.
9. Apply the adhesive over the leak and for a distance of 75 to 100 mm (3 to 4 inches) on both sides of the leak.

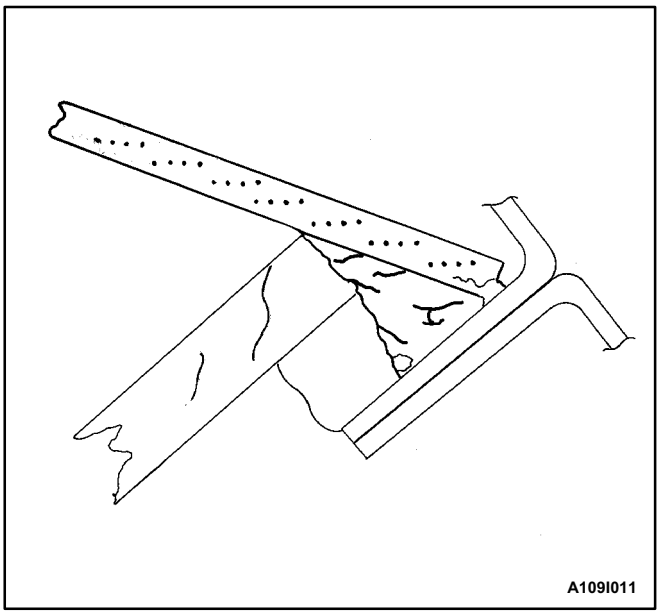

10. Immediately after applying the adhesive, use a flat stick or a similar tool to work the adhesive into the leak area and into the joint between the original material and the vehicle body in order to ensure a watertight seal.
11. Spray warm or hot water over the repaired area in order to determine if the leak was repaired. Do not run a heavy stream of water directly on the freshly-applied adhesive.
12. Install the trim strip lace if it was removed.
13. Install the garnish molding if it was removed.
14. Install the reveal molding.

Important: After the completion of any waterleak repair, re-test the area using the watertest stands. Do not use-localized testing procedures on the newly-repaired areas, as the repair material may dislodge under abnormal pressure.

SECTION 9J

WINDNOISE

TABLE OF CONTENTS

Diagnosis **9J-1**
Windnoise Diagnosis 9J-1
Maintenance and Repair **9J-2**
On-Vehicle Service 9J-2
Windnoise Repair 9J-2

DIAGNOSIS

WINDNOISE DIAGNOSIS

Caution: An assistant should drive the vehicle while the technician checks for the location of the windnoise, in order to prevent personal injury or vehicle damage.

A test drive in the vehicle is necessary to accurately determine the location of the windnoise. Often there is a primary leak and secondary leaks. Failure to repair all leaks will only reduce the windnoise, not eliminate it.

During the test drive the technician should bring the following items to aid in determining the location of the windnoise.

- A mechanics stethoscope or vacuum hose
- Masking tape
- Strip caulk
- A china marking pencil
- A screwdriver

Perform the following steps in order to conduct the road test:

1. Choose a route that includes smooth straight streets that run in all four directions (north, south, east, and west).
2. Choose streets with little traffic or noise that would interfere with the test.
3. Drive the vehicle at the speeds at which the noise was noticed by the customer or until the noise is produced. Do not exceed legal speed limits.
4. The windnoise is external if any of the following conditions occur:
   - The windnoise is caused by the wind.
   - The windnoise can be heard with the door glass lowered and while the vehicle is being driven.
   - The windnoise is eliminated when tape is placed over various moldings and gaps.
5. Internal windnoise is air leaving the vehicle and should be repaired in the following manner.
   - In order to locate the leak, tape off the body lock pillar pressure relief valves. This will cause air pressure to build up inside the vehicle and enhance the windnoise.
   - Use a stethoscope or a vacuum hose to locate the leak.
   - Temporarily repair the leak with masking tape.

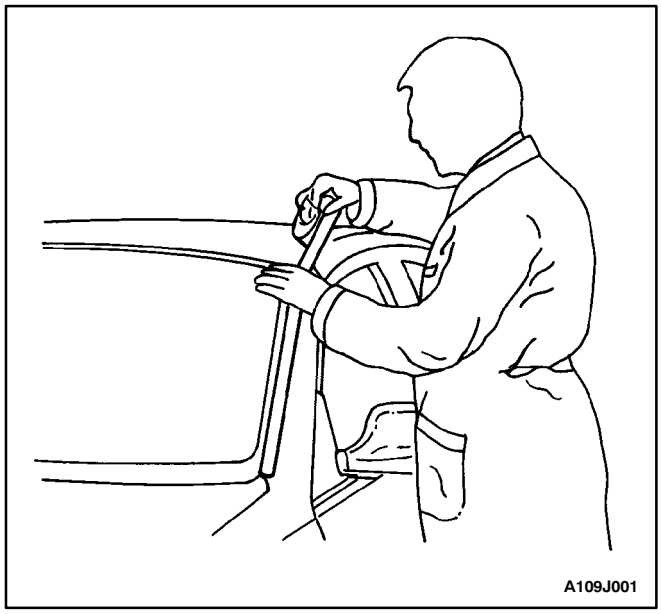

   - Continue testing in order to determine if the noise has been eliminated or if other leaks exist.
   - When all leaks have been found, return to the shop and make permanent repairs with the proper alignment techniques and sealing materials.

MAINTENANCE AND REPAIR

ON-VEHICLE SERVICE

WINDNOISE REPAIR

Windnoise leak repairs are very similar to waterleak repairs. Refer to *Section 9I, Waterleaks*. The actual procedure depends on the type of seal being repaired.

Leaks around the door opening weatherstrips do not always indicate a faulty weatherstrip. A door or window adjustment may resolve the condition. Refer to *Section 9P, Doors* or *Section 9L, Glass and Mirrors*.

SECTION 9K

SQUEAKS AND RATTLES

TABLE OF CONTENTS

Diagnosis **9K-1**
Squeak and Rattle Diagnosis 9K-1
Maintenance and Repair **9K-3**
On-Vehicle Service 9K-3
Squeak and Rattle Repair 9K-3

DIAGNOSIS

SQUEAK AND RATTLE DIAGNOSIS

Rattle Coming From the Side Rail

Checks	Action
Check the brake lines.	• Tap lightly on the brake lines and listen for a rattle. • Install plastic tie straps to secure the brake lines tightly together.

Rattle Under Vehicle at Higher RPM

Checks	Action
Check for heat shield contact with the underbody.	• Raise the vehicle and perform a visual inspection. • Bend the heat shield slightly to gain clearance from the underbody.

Squeak From the Front of the Vehicle in Cold Weather

Checks	Action
Check the front stabilizer shaft insulators.	• While the vehicle is cold, perform a test drive and achieve full front suspension travel by driving through a dip in the road. • Remove the insulators and wrap teflon tape around the stabilizer shaft. Reinstall the insulators over the tape.

Thump From Rear of Vehicle on Bumps

Checks	Action
Check for a properly secured spare tire in the rear compartment.	• Open the rear compartment and perform a visual inspection of the spare tire and the tools. • Tightly secure the spare tire and all tools. • Perform a road test to verify that the noise is eliminated.

Glass Knock Coming From the Rear of the Vehicle When Driving Over Bumps

Checks	Action
Check for an out-of-adjustment hatchback latch.	● Test drive the vehicle in order to verify this condition. ● Loosen the latch nuts and adjust the latch downward.

Rattle Coming From Door

Checks	Action
Check the door lock solenoid.	● Remove the door trim panel and check if the solenoid is loose. ● Tighten the solenoid bolts.
Check for rattling electrical connectors inside the door trim panel.	● Tap on the trim panel and listen for a rattle. ● Remove the trim panel and wrap foam padding around the connectors as required.

Squeak When Operating Doors

Checks	Action
Check for a lack of lubrication of the door hinge pins.	● Operate the doors and listen for squeaks. ● Lubricate the door hinge pins with light oil and coat with lithium grease.

Squeak Coming From Console When Shifting Manual Transaxle (Condition Occurs In Cold Weather with a Cold Engine)

Checks	Action
Check the manual transaxle control lever lower boot.	● Move the control lever between gears and listen for squeaks. ● Remove the floor console and replace the lower shift boot or apply talcum powder to the lower shift boot.

Buzz From the Left Side of Instrument Panel

Checks	Action
Check for vibration of the fuse box cover against the instrument panel side trim.	● Tap on the cover with a finger and listen for a buzz. ● Apply 6.35 mm (0.250 inch) by 25.4 mm (1.00 inch) felt pads to the side trim where the cover makes contact.

Squeak Coming From Instrument Cluster Trim Plate

Checks	Action
Check for rubbing of the cluster trim plate on the instrument panel.	● Test drive the vehicle in order to verify this condition. ● Remove the instrument cluster trim plate and install felt tape to the edges.

MAINTENANCE AND REPAIR

ON-VEHICLE SERVICE

SQUEAK AND RATTLE REPAIR

Squeaks and rattles are caused by the unwanted movement between parts of a vehicle. There are three means to prevent squeaks or rattles.

- Attach the parts securely so that there is no relative motion during the operation of the vehicle.
- Separate the parts so that there is no contact during operation.
- Insulate the parts so that no squeaks or rattles occur with the movement of the parts. Low uniform friction surfaces can be used to eliminate “stick-slip” motion.

SECTION 9L

GLASS AND MIRRORS

TABLE OF CONTENTS

Specifications 9L-1
Fastener Tightening Specifications 9L-1
Special Tools 9L-1
Special Tools Table 9L-1
Schematic and Routing Diagrams 9L-2
Rear Window and Outside Rearview Mirror Defogger 9L-2
Electric Control Outside Rearview Mirrors 9L-3
Diagnosis 9L-4
Testing Rear Window Defogger Grid Line 9L-4
Outside Mirror Defoggers 9L-4
Electric Control Outside Rearview Mirrors 9L-5
Maintenance and Repair 9L-7
On-Vehicle Service 9L-7
Windshield 9L-7
Rear Window Glass 9L-9
Rear Window Defogger Grid Line Repair 9L-11
Rear Window Defogger Braided Lead Wire Repair 9L-12
Front Door Glass 9L-13
Rear Door Glass 9L-13
Rear Door Quarter Window 9L-14
Rearview Mirror 9L-15
Electric Control Outside Rearview Mirrors 9L-16
General Description and System Operation 9L-18
Stationary Glass 9L-18
Electric Control Heated Outside Rearview Mirrors 9L-18
Inside Rearview Mirror 9L-18

SPECIFICATIONS

FASTENER TIGHTENING SPECIFICATIONS

Application	N•m	Lb-Ft	Lb-In
Glass Screws	7	–	62
Guide Rail Bolts	7	–	62
Guide Rail Screw	4	–	35
Outside Rearview Mirror Assembly Bolts	6	–	53
Rearview Mirror Mounting Bolt	1.2	–	11

SPECIAL TOOLS

SPECIAL TOOLS TABLE

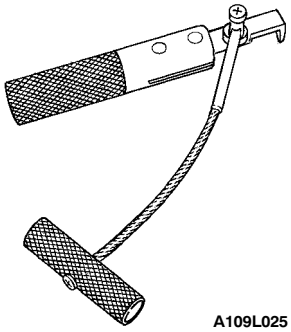 A109L025	**J-24402 Glass Sealant Remover**

SCHEMATIC AND ROUTING DIAGRAMS

REAR WINDOW AND OUTSIDE REARVIEW MIRROR DEFOGGER

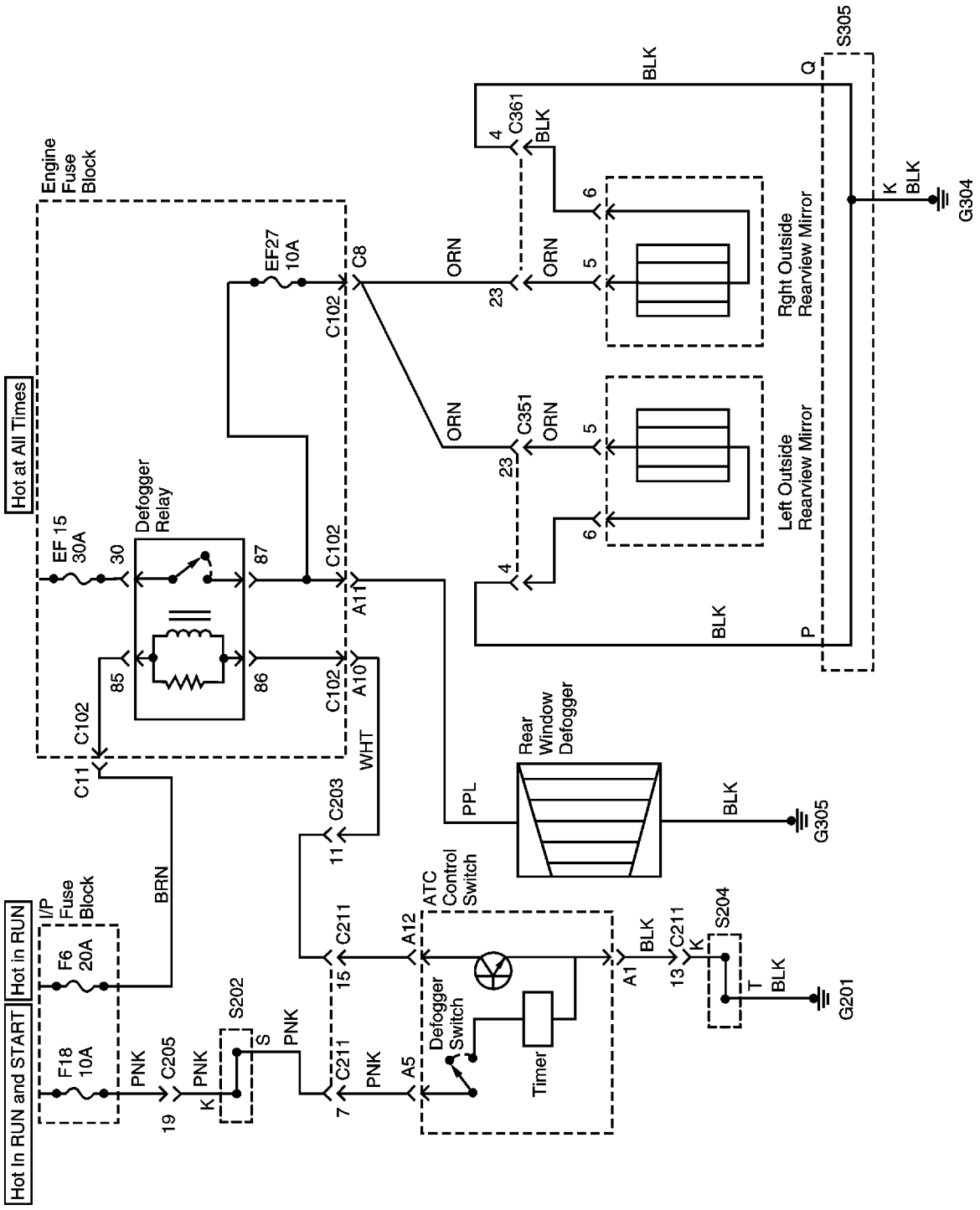

C309L010

ELECTRIC CONTROL OUTSIDE REARVIEW MIRRORS

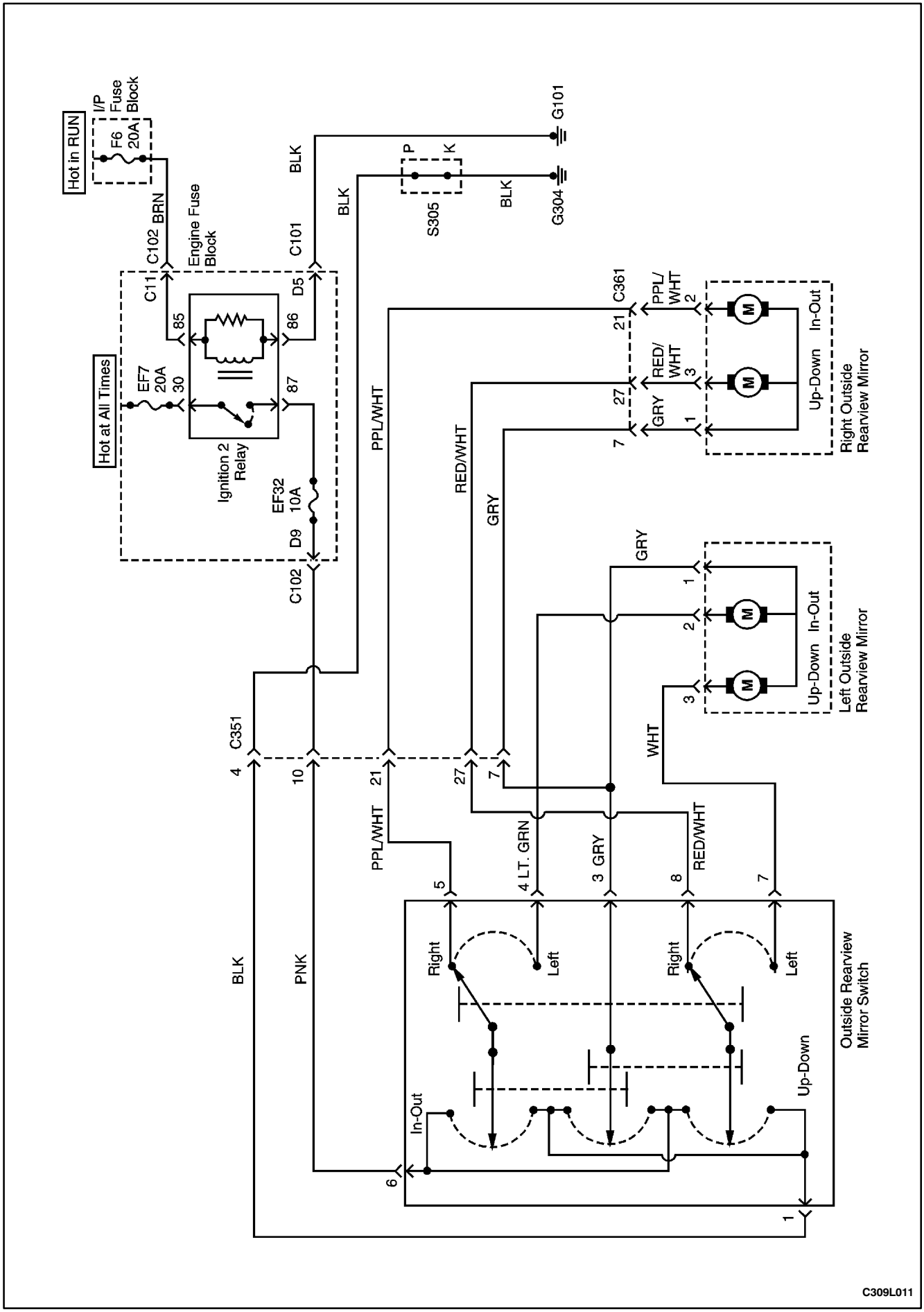

DIAGNOSIS

TESTING REAR WINDOW DEFOGGER GRID LINE

If it has been observed during use that a grid line is inoperative, the following procedure can be used to find the break. If none of the grid lines is operating, a full system diagnosis should be completed before attempting to repair the grid lines.

1. Turn the ignition ON.
2. Turn the rear window defogger ON.
3. From the inside of the vehicle, connect a voltmeter to each end of a grid line. The voltmeter will indicate battery voltage if the grid line is open.

Important: Use care when touching the voltmeter terminals to a grid line. If the terminals are roughly applied, the grid line may be scratched, resulting in an open circuit.

4. If a grid line is found to be open, move a voltmeter terminal from one side of the grid line and re-test at a point nearer to the other side of the window. Continue to re-test, each time bringing one of the voltmeter terminals closer to the opposite side of the window from where it was originally connected. The break in the grid line is at the point where the voltmeter begins reading 0 volts instead of battery voltage.
5. Use a marking crayon to lightly mark the break point on the rear window. Mark the glass instead of marking directly on the grid line, and make the mark far enough from the grid line so that it can easily be removed without disturbing the repair.
6. Use a grid line repair kit to fix the break in the grid line. Refer to “Rear Window Defogger Grid Line Repair” in this section.

OUTSIDE MIRROR DEFOGGERS

Step	Action	Value(s)	Yes	No
1	Check the rear window defogger. Does the rear window defogger work?	–	Go to *Step 4*	Go to *Step 2*
2	Repair the rear window defogger before proceeding with the outside mirror diagnosis. Is the repair complete?	–	Go to *Step 3*	–
3	Test the outside mirror defoggers. Does the repair of the rear window defogger system also fix the problem with the outside mirror defoggers?	–	System OK	Go to *Step 4*
4	Check fuse EF27. Is fuse EF27 blown?	–	Go to *Step 5*	Go to *Step 6*
5	1. Check for a short circuit and repair it if necessary. 2. Replace the fuse. Is the repair complete?	–	System OK	–
6	1. On the side of the vehicle which has the malfunctioning mirror defogger, remove the black plastic escutcheon from the trim panel side of the door. 2. Disconnect the outside mirror electrical connector. 3. Turn the ignition ON. 4. Turn on the defogger. 5. Use a voltmeter to backprobe terminal 5 (ORN) at the mirror electrical connector. Does the voltmeter indicate the specified value?	11-14 V	Go to *Step 8*	Go to *Step 7*
7	Repair the open circuit between fuse EF27 and the mirror connector. Is the repair complete?	–	System OK	–

Outside Mirror Defoggers (Cont'd)

Step	Action	Value(s)	Yes	No
8	1. Turn the ignition OFF. 2. Disconnect the outside mirror electrical connector. 3. Use an ohmmeter to measure the resistance between terminal 6 (BLK) of the mirror connector and ground. Does the ohmmeter indicate the specified value?	≈0 Ω	Go to *Step 10*	Go to *Step 9*
9	Repair the open ground circuit for the outside rearview mirror. Is the repair complete?	–	System OK	–
10	Replace the defective outside rearview mirror. Is the repair complete?	–	System OK	–

ELECTRIC CONTROL OUTSIDE REARVIEW MIRRORS

Outside Rearview Mirrors Do Not Adjust

Step	Action	Value(s)	Yes	No
1	Check fuse EF32. Is fuse EF32 blown?	–	Go to *Step 2*	Go to *Step 3*
2	1. Check for a short circuit and repair it if necessary. 2. Replace fuse EF32. Is the repair complete?	–	System OK	–
3	Turn the ignition ON. Check the voltage at fuse EF32. Is the voltage at EF32 equal to the specified value?	11-14 V	Go to *Step 5*	Go to *Step 4*
4	Repair the open power supply circuit for fuse EF32. Is the repair complete?	–	System OK	–
5	Check the power mirrors. Are both power mirrors inoperative?	–	Go to *Step 6*	Go to *Step 13*
6	1. Remove the retaining screw for the power door mirror and power window switch assembly. 2. Lift the switch assembly so that the connectors on the underside are visible. Is the connector secured to the power mirror switch?	–	Go to *Step 8*	Go to *Step 7*
7	Connect the connector to the power mirror switch. Is the repair complete?	–	System OK	–
8	Use an ohmmeter to check the continuity between terminal 1 (BLK) of the mirror switch connector and ground. Does the ohmmeter indicate the specified value?	≈0 Ω	Go to *Step 10*	Go to *Step 9*
9	Repair the open ground circuit for the mirror switch. Is the repair complete?	–	System OK	–
10	1. Turn the ignition ON. 2. Check the voltage at terminal 6 (PNK) of the mirror switch connector. Is the voltage equal to the specified value?	11-14 V	Go to *Step 12*	Go to *Step 11*
11	Repair the open power supply circuit for the mirror switch. Is the repair complete?	–	System OK	–

Outside Rearview Mirrors Do Not Adjust (Cont'd)

Step	Action	Value(s)	Yes	No
12	Replace the outside rearview mirror switch. Is the repair complete?	–	System OK	–
13	1. On the side which has the inoperative mirror, remove the black plastic escutcheon from the trim panel side of the door. 2. Disconnect the outside mirror electrical connector. 3. Turn the ignition ON. 4. At the outside mirror connector, connect a voltmeter between terminal 1 (GRY) and terminal 2 (LT GRN if testing the driver side or PPL/WHT if testing the passenger side). 5. Operate the In/Out adjustment on the switch, and record the voltage indicated in each switch position. 6. Connect a voltmeter between terminal 1 (GRY) and terminal 3 (WHT if testing the left side or RED/WHT if testing the right side). 7. Operate the Up/Down adjustment on the switch, and record the voltage indicated in each switch position. Does the voltmeter indicate the specified voltage for each test, with the polarity reversing when the switch was changed from In to Out or Up to Down?	11-14 V	Go to *Step 14*	Go to *Step 15*
14	Replace the outside rearview mirror. Is the repair complete?	–	System OK	–
15	1. Remove the retaining screw for the power door mirror and power window switch assembly. 2. Lift the switch assembly so that the connectors on the underside are visible. 3. Leave the outside mirror disconnected, but do not disconnect the mirror switch connector. 4. Turn the ignition ON. 5. At the mirror switch connector, backprobe to measure the voltage between terminal 1 (GRY) and terminal 2 (LT GRN if testing the left side or PPL/WHT if testing the right side). 6. Operate the In/Out adjustment on the switch, and record the voltage indicated in each switch position. 7. Connect a voltmeter between terminal 1 (GRY) and terminal 3 (WHT if testing the left side or RED/WHT if testing the right side. 8. Operate the Up/Down adjustment on the switch, and record the voltage indicated in each switch position. Does the voltmeter indicate the specified voltage for each test, with the polarity reversing when the switch was changed from In to Out or Up to Down?	11-14 V	Go to *Step 16*	Go to *Step 12*
16	Repair the open circuit between the mirror switch and the outside rearview mirror connector. Is the repair complete?	–	System OK	–

MAINTENANCE AND REPAIR

ON-VEHICLE SERVICE

WINDSHIELD

Tools Required

J-24402 Glass Sealant Remover

Removal Procedure

1. Remove the cowl vent grille. Refer to *Section 9R, Body Front End.*
2. Remove the inside rearview mirror. Refer to “Rearview Mirror” in this section.
3. Remove the weatherstrip around the windshield.

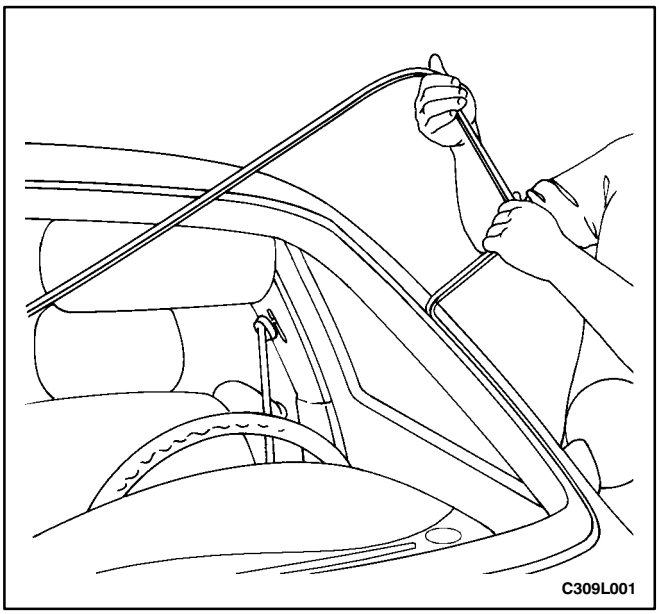

4. Using the glass sealant remover J-24402, cut the adhesive around the windshield.

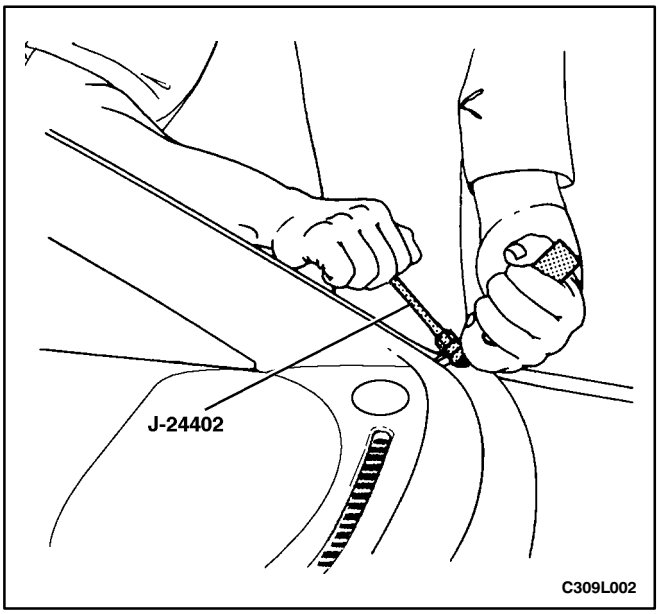

5. Remove the windshield from the vehicle.
6. Using a knife, remove the adhesive from the windshield.
7. Using a knife, remove the adhesive from the windshield frame.

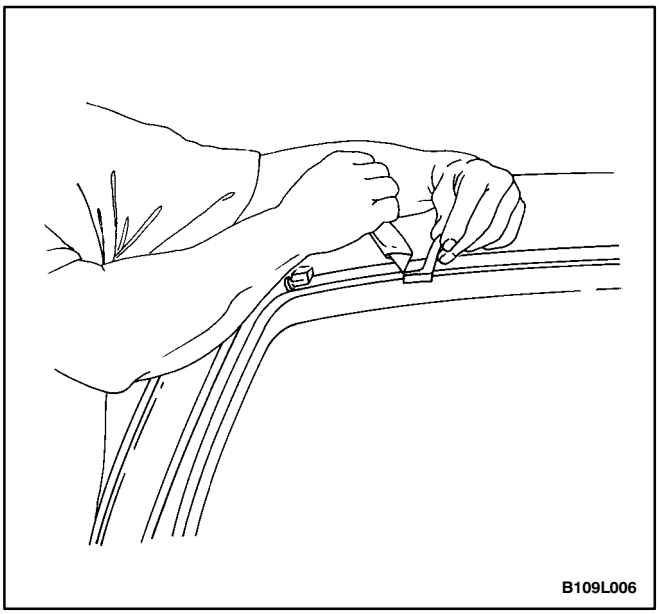

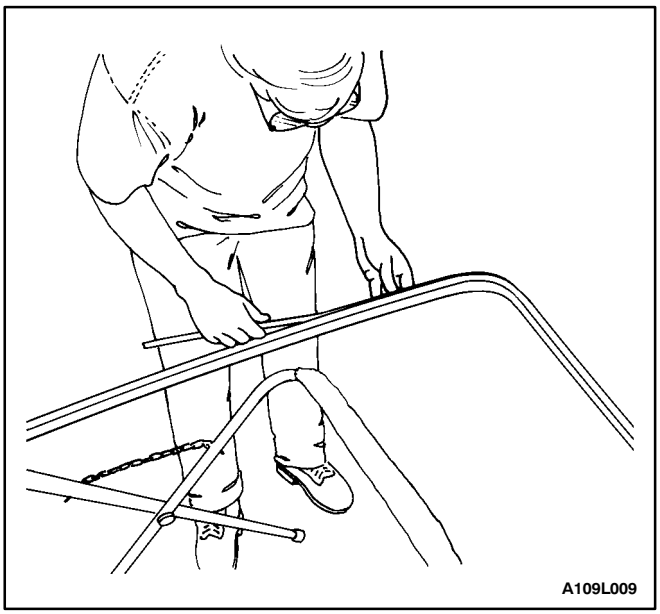

Installation Procedure

1. Install the new weatherstrip to the windshield.

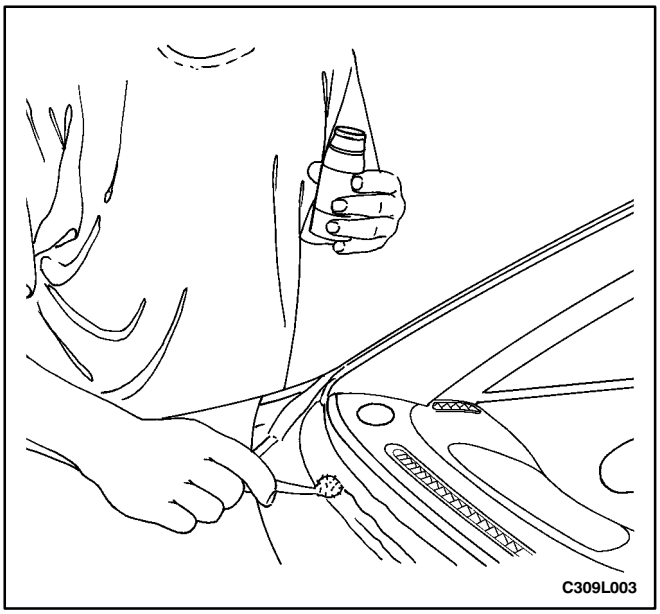

2. Apply tape to the new weatherstrip and the windshield to hold the weatherstrip in place.
3. Apply adhesive primer to the windshield frame and the perimeter of the windshield.

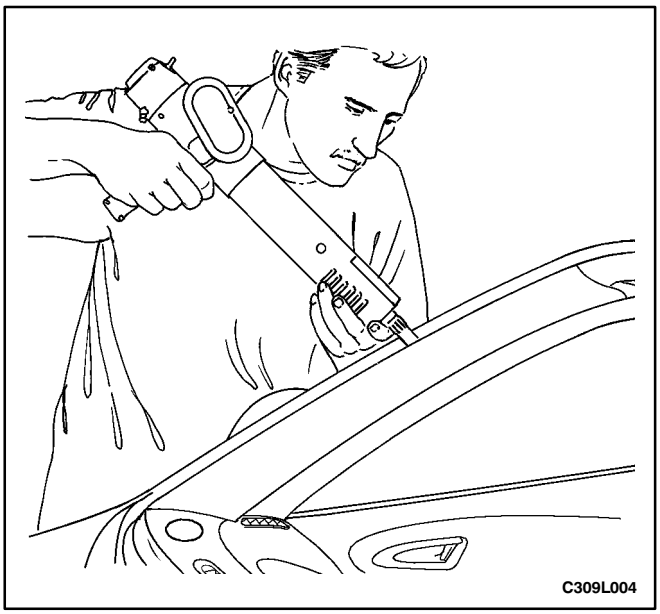

4. Apply glass adhesive to the windshield frame.
5. Install the windshield into the windshield frame.
6. Reposition the tape over the weatherstrip, the windshield, and the windshield frame to hold the windshield in place.
7. Let the adhesive dry for 24 hours.
8. Remove the tape.
9. Check for waterleaks by pouring water on the windshield. If a leak is found, dry the windshield and fill the area that leaks with adhesive. If the leak persists, remove the windshield and repeat the entire procedure.
10. Install the inside rearview mirror. Refer to “Rearview Mirror” in this section.
11. Install the cowl vent grille. Refer to *Section 9R, Body Front End.*

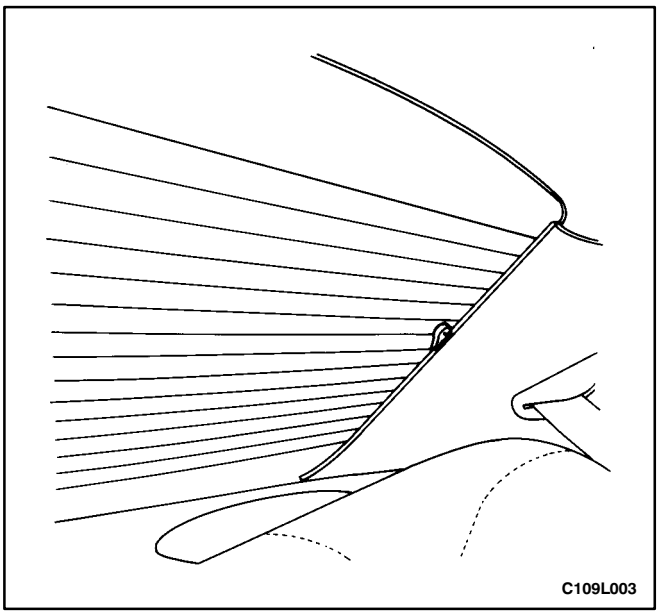

REAR WINDOW GLASS

Tools Required

J-24402 Glass Sealant Remover

Removal Procedure

1. Disconnect the negative battery cable.
2. Disconnect the rear window defogger electrical connector.

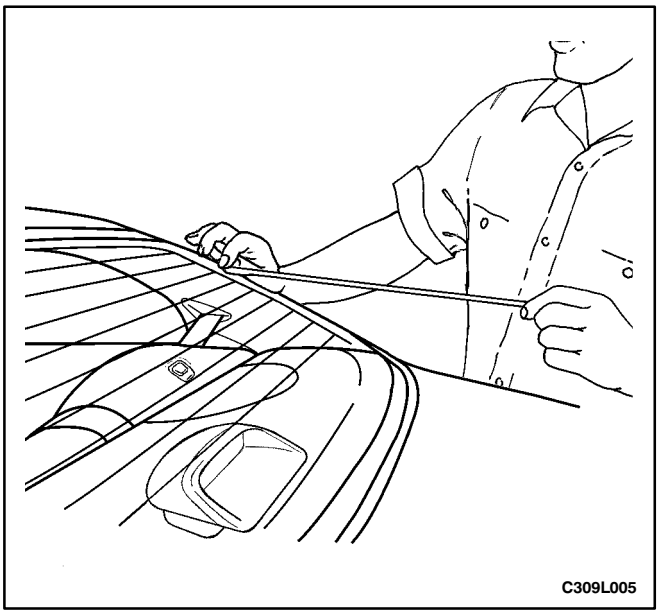

3. Remove the weatherstrip around the rear window.

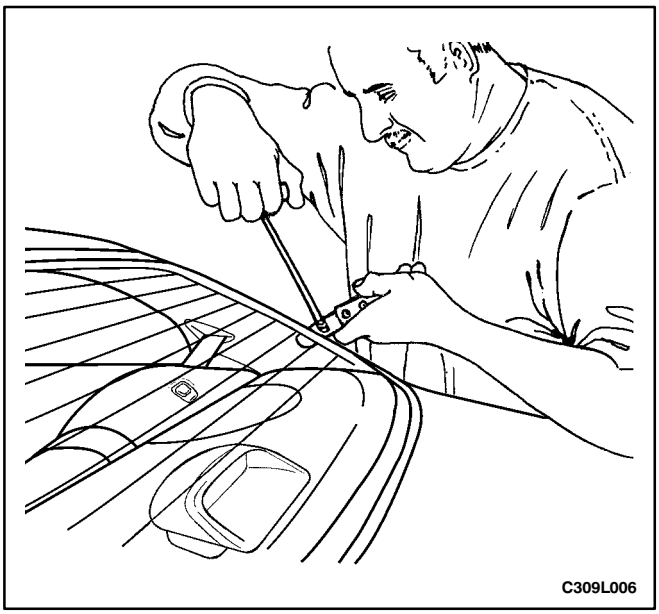

4. Using the glass sealant remover J-24402, cut the adhesive around the rear window.

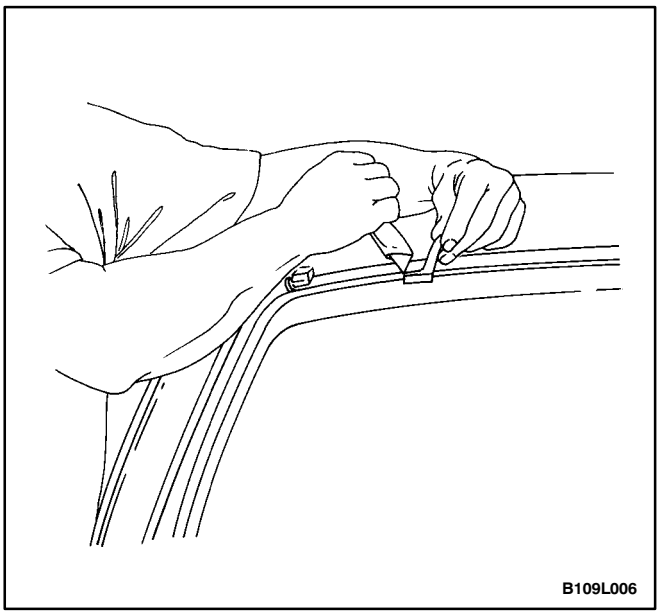

5. Remove the rear window from the vehicle.
6. Using a knife, remove the adhesive from the rear window.
7. Using a knife, remove the adhesive from the rear window frame.

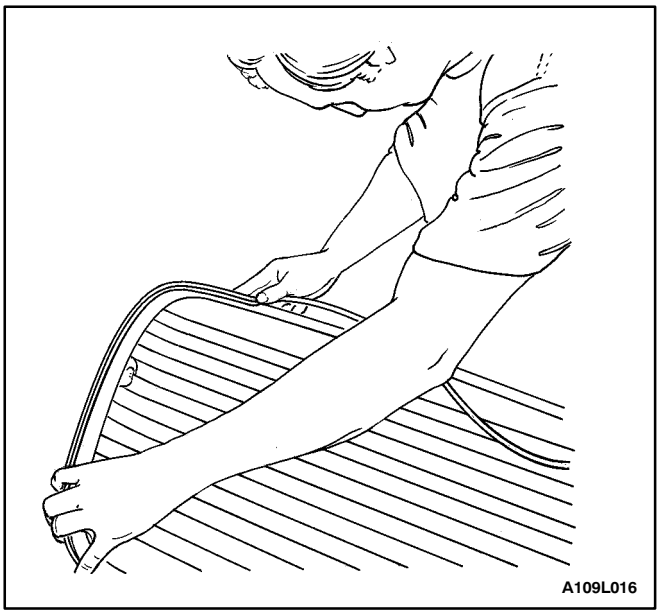

Installation Procedure

1. Install the new weatherstrip to the rear window.

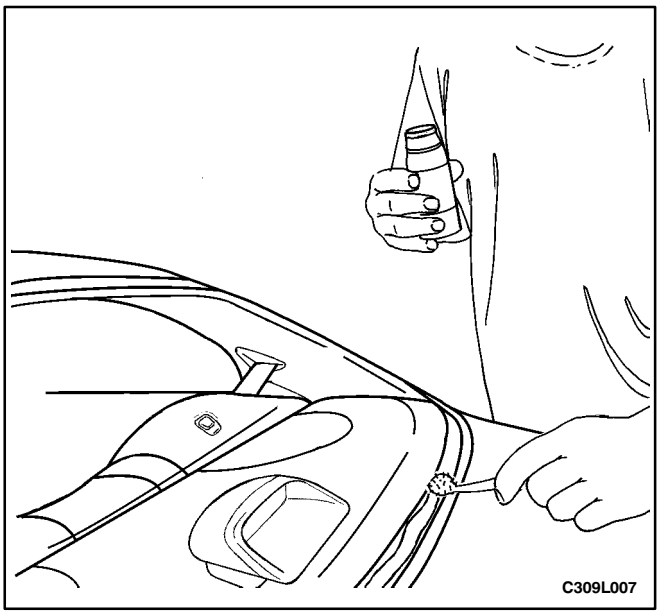

2. Apply tape to the new weatherstrip and the rear window to hold the weatherstrip in place.
3. Apply adhesive primer to the rear window frame and the perimeter of the rear window.

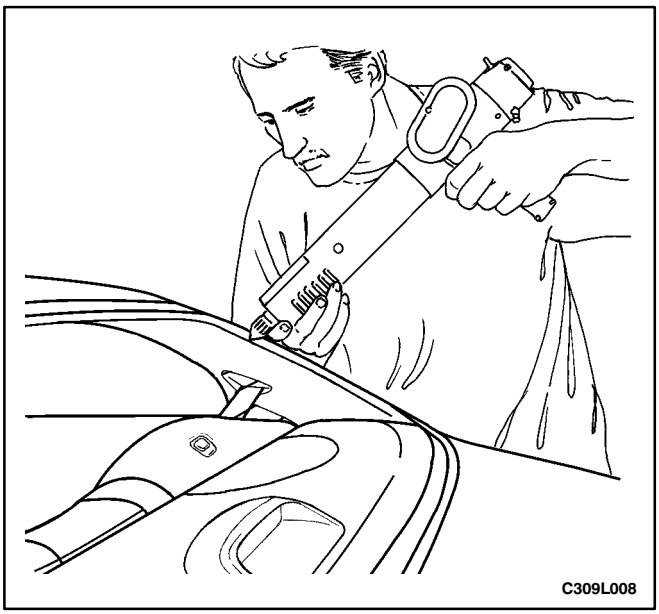

4. Apply glass adhesive to the rear window frame.

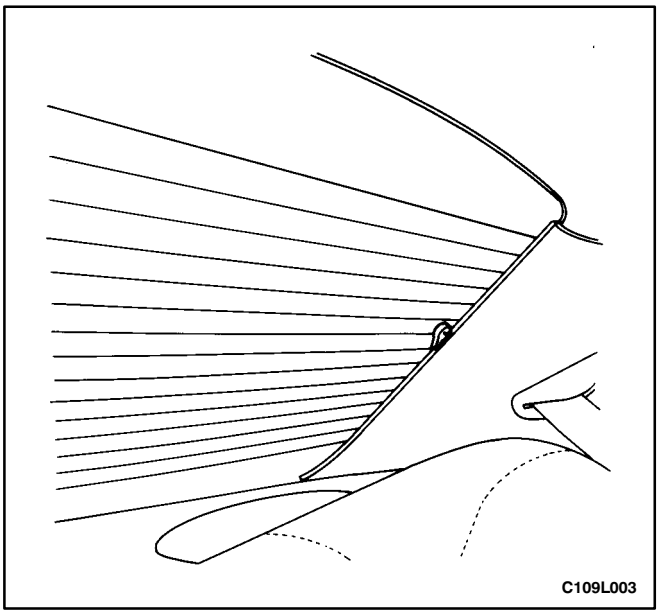

5. Install the rear window into the rear window frame.
6. Reposition the tape over the weatherstrip, the rear window, and the rear window frame to hold the rear window in place.
7. Let the adhesive dry for 24 hours.
8. Remove the tape.
9. Check for waterleaks by pouring water on the rear window. If a leak is found, dry the window and fill the area that leaks with adhesive. If the leak persists, remove the rear window and repeat the entire procedure.
10. Connect the rear window defogger electrical connector.
11. Connect the negative battery cable.

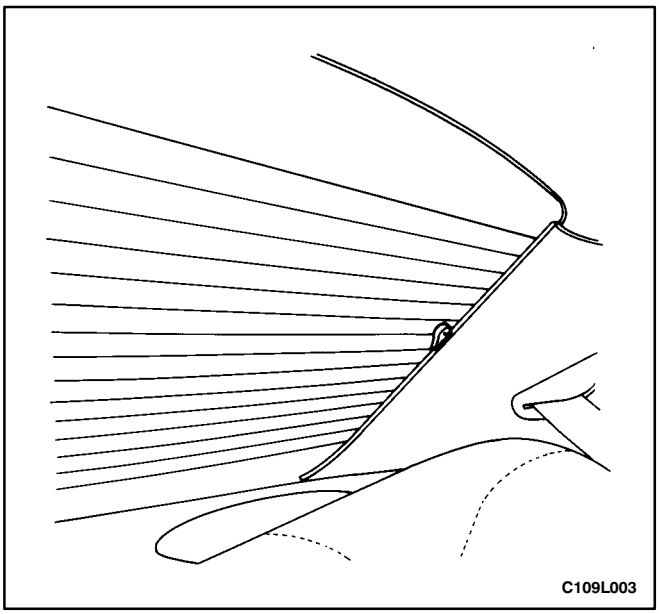

REAR WINDOW DEFOGGER GRID LINE REPAIR

1. Disconnect the negative battery cable.
2. Disconnect the rear window defogger electrical connector.
3. Inspect the rear window defogger grid lines.
4. Mark the grid line break on the outside of the glass with a wax pencil or a crayon.
5. Buff the grid lines that are to be repaired with steel wool. Wipe the lines clean using a cloth dampened with alcohol. Buff and clean about 6 mm (0.25 inch) beyond each side of the break in the grid line.

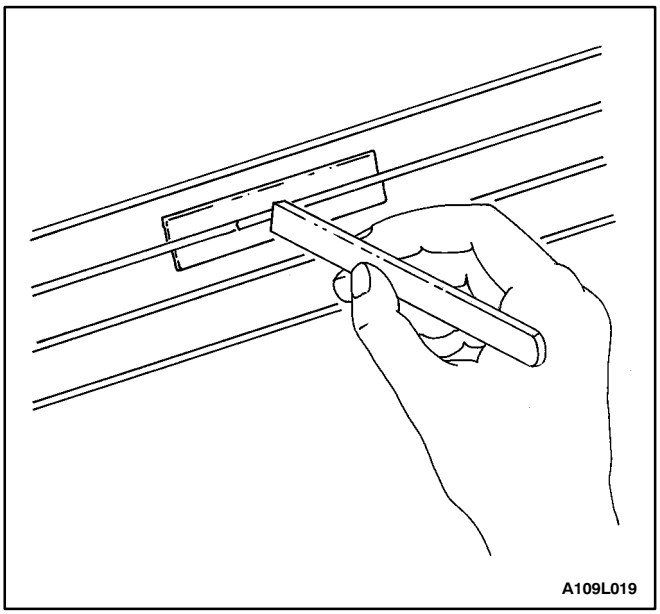

6. Attach a grid line repair decal or two strips of tape above and below the repair areas.
   - A repair decal or tape must be used in order to control the width of the repair areas.
   - If a decal is used, the die-cut metered slot must be the same width as the grid line.
7. Apply the grid repair material to the repair area using a small wooden stick or a spatula. The grid repair material should be at room temperature.
8. Carefully remove the decal or the tape.

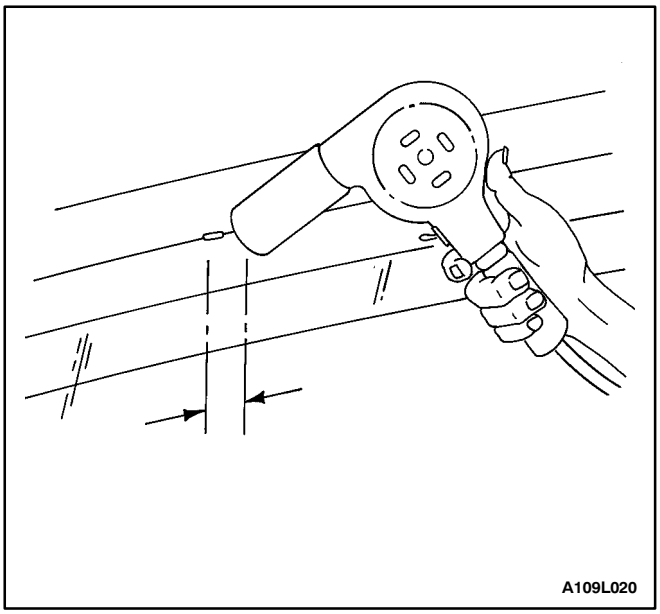

Notice: The grid line repair material must be cured with heat. In order to avoid heat damage to the interior trim, protect the trim near the repair area where heat will be applied.

9. Heat the repair area for 1 to 2 minutes.
10. Hold the heat gun nozzle 25 mm (1 inch) from the surface. A minimum temperature of 149°C (300°F) is required.
11. Inspect the grid line repair area. If the repair appears discolored, apply a coating of tincture of iodine to the area using a pipe cleaner or a line brush. Allow the iodine to dry for about 30 seconds. Carefully wipe off the excess iodine with a lint-free cloth.
12. Test the operation of the rear window defogger in order to verify that the repair was successful.

Important: At least 24 hours is required for complete curing of the repair materials. The repair area should not be physically disturbed until after that time.

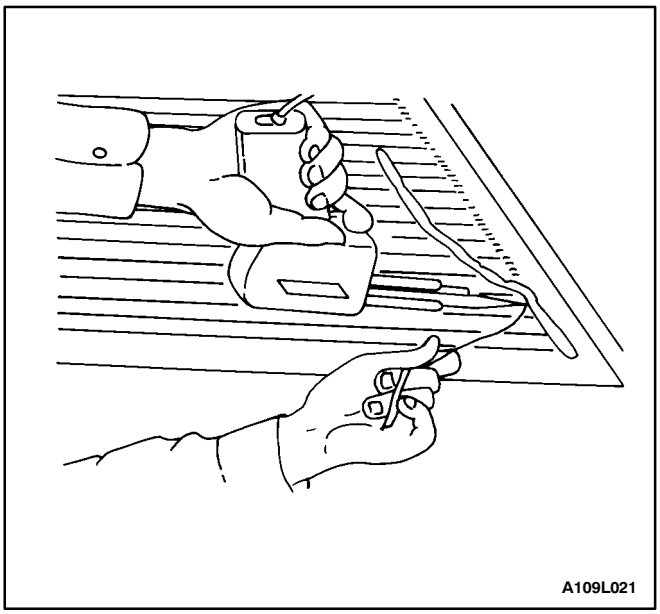

REAR WINDOW DEFOGGER BRAIDED LEAD WIRE REPAIR

The rear window defogger bus lead wire or the terminal can be reattached by resoldering. Use a solder containing 3 percent silver and a rosin flux paste.

1. The repair area should be buffed with fine steel wool before soldering the bus lead wire.
2. Apply the paste-type rosin flux in small quantities to the wire lead and the bus lead wire repair area using a brush.
3. Coat the soldering iron tip with solder. Use only enough solder to ensure a complete repair.
4. Use only enough heat to melt the solder. Do not overheat the wire when resoldering to the bus lead wire.

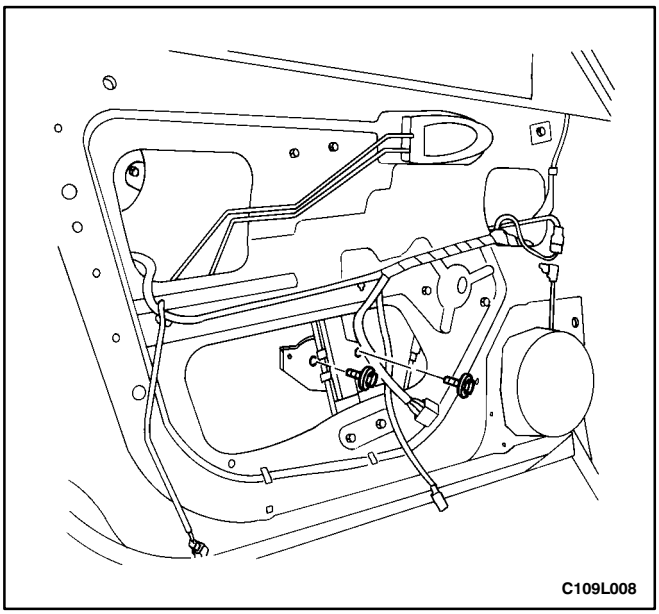

FRONT DOOR GLASS

Removal Procedure

1. Remove the door seal trim. Refer to *Section 9P, Doors*.
2. Remove the B-pillar molding. Refer to *Section 9M, Exterior Trim*.
3. Remove the screws that secure the glass to the window regulator.
4. Remove the glass from the door.

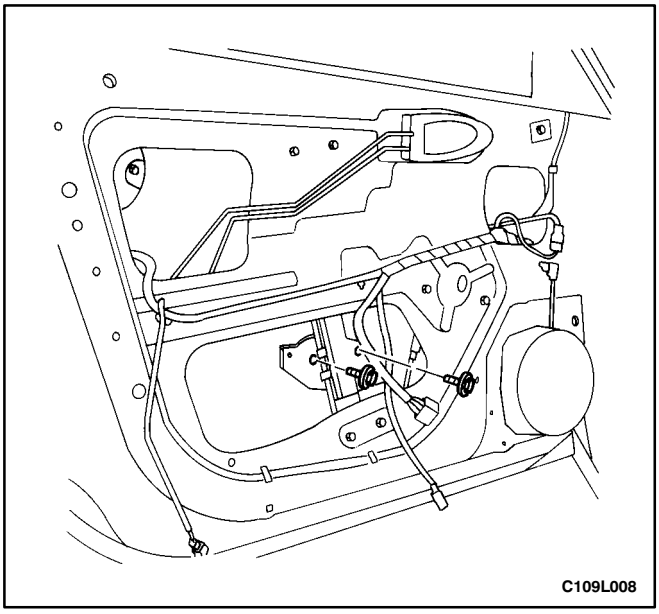

Installation Procedure

1. Install the glass in the door and position the glass within the window regulator.

Notice: Dissimilar metals in direct contact with each other may corrode rapidly. Make sure to use the correct fasteners to prevent premature corrosion.

2. Install the glass to the window regulator with the screws.

Tighten

Tighten the glass screws to 7 N•m (62 lb-in).

3. Install the B-pillar molding. Refer to *Section 9M, Exterior Trim.*
4. Install the door seal trim. Refer to *Section 9P, Doors*.

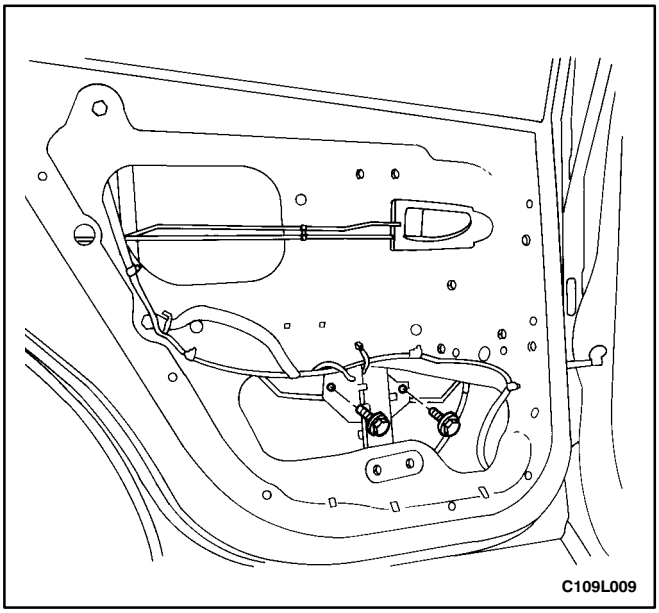

REAR DOOR GLASS

Removal Procedure

1. Remove the door seal trim. Refer to *Section 9P, Doors*.
2. Remove the exterior B-pillar molding. Refer to *Section 9M, Exterior Trim*.
3. Remove the screws that secure the glass to the window regulator.
4. Remove the glass from the door.

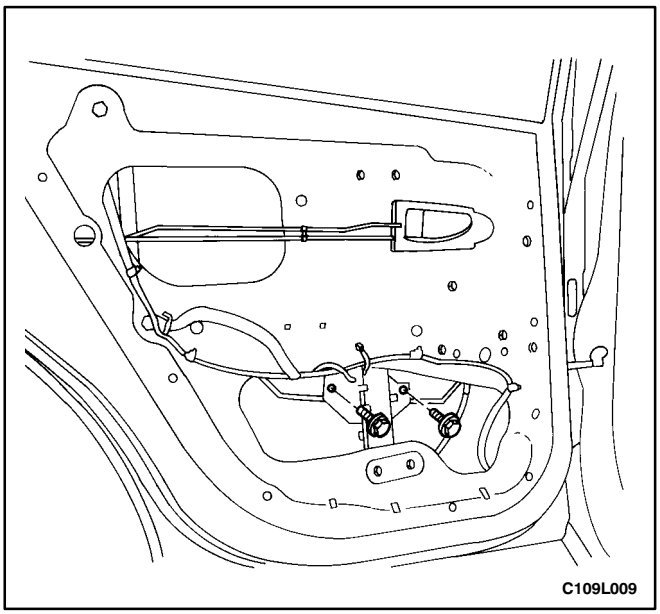

Installation Procedure

1. Install the glass in the door and position the glass within the window regulator.

Notice: Dissimilar metals in direct contact with each other may corrode rapidly. Make sure to use the correct fasteners to prevent premature corrosion.

2. Install the glass screws.

Tighten

Tighten the glass screws to 7 N•m (62 lb-in).

3. Install the exterior B-pillar molding. Refer to *Section 9M, Exterior Trim*.
4. Install the door seal trim. Refer to *Section 9P, Doors*.

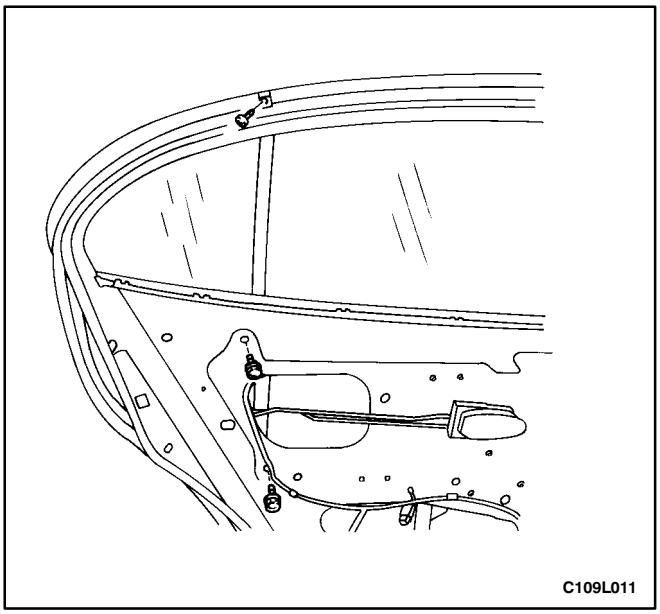

REAR DOOR QUARTER WINDOW

Removal Procedure

1. Remove the rear door glass. Refer to “Rear Door Glass” in this section.
2. Remove the bolts and the screw from the rear door quarter window guide rail.
3. Remove the guide rail and the rear door quarter window.

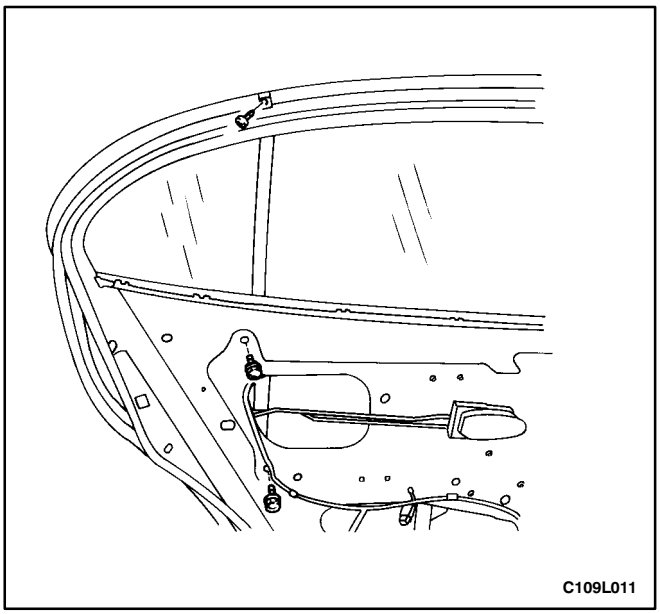

Installation Procedure

1. Install the guide rail and the rear door quarter window.

Notice: Dissimilar metals in direct contact with each other may corrode rapidly. Make sure to use the correct fasteners to prevent premature corrosion.

2. Install the rear door quarter window guide rail bolts and the screw.

Tighten

Tighten the rear door quarter window guide rail bolts to 7 N•m (62 lb-in).

Tighten the rear door quarter window guide rail screw to 4 N•m (35 lb-in).

3. Install the rear door glass. Refer to “Rear Door Glass” in this section.

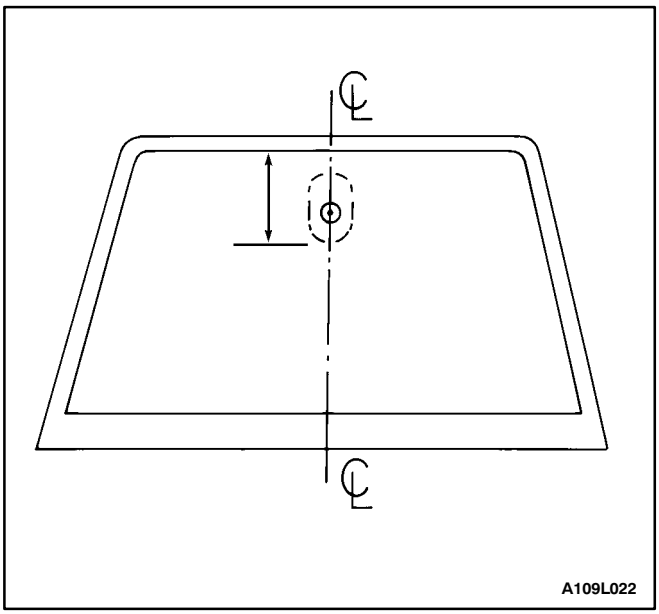

REARVIEW MIRROR

The inside rearview mirror is attached to a support which is secured to the windshield glass. The support is installed by the glass supplier using a plastic-polyvinyl butyl adhesive.

Service replacement windshield glass has the mirror support bonded to the glass assembly. In order to install a detached mirror support or to install a new part, the following items will be needed:

- Loctite® Minute-Bond Adhesive.
- Original or replacement mirror support.
- Wax marking pencil or crayon.
- Rubbing alcohol.
- Clean paper towel.
- Fine grit sandpaper (grit #320 or #360).
- 2 mm allen wrench.

Installation Procedure

1. Measure the distance from the headliner to the bottom of the location where the mirror support will be mounted on the windshield.

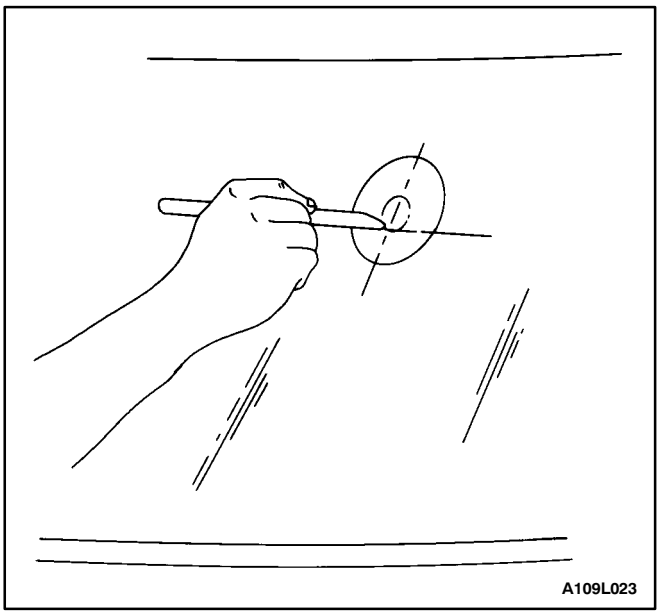

2. Mark this position on the outside of the glass with a wax pencil or crayon. Draw a large diameter circle around the mirror support location on the outside of the glass.
3. Clean the inside surface of the glass with a domestic scouring cleanser, a glass cleaning solution, or a polishing compound and paper towels. Rub the glass until the area is completely dry. When the area is dry, clean the area with an alcohol-saturated paper towel in order to remove any traces of the scouring powder or the glass cleaning solution.
4. If the mirror support is new, clean the bonding surface with fine grit sandpaper #320 or #360. If the original mirror support is being used, all traces of factory-installed adhesive must be removed prior to reinstallation.
5. Wipe the sanded mirror support with a clean paper towel saturated with rubbing alcohol. Allow the support to dry.
6. Follow the adhesive kit manufacturer's directions for adhesive application and mirror support preparation before installing the mirror support to the glass.
7. Position the mirror support to its premarked position. Use steady pressure and press the support against the glass for 30 to 60 seconds.
8. After 5 minutes, remove the excess adhesive with an alcohol-moistened towel or a glass-cleaning solution.
9. Install the inside rearview mirror to the mirror support with the mounting screw.

Tighten

Tighten the rearview mirror mounting bolt to 1.2 N•m (11 lb-in).

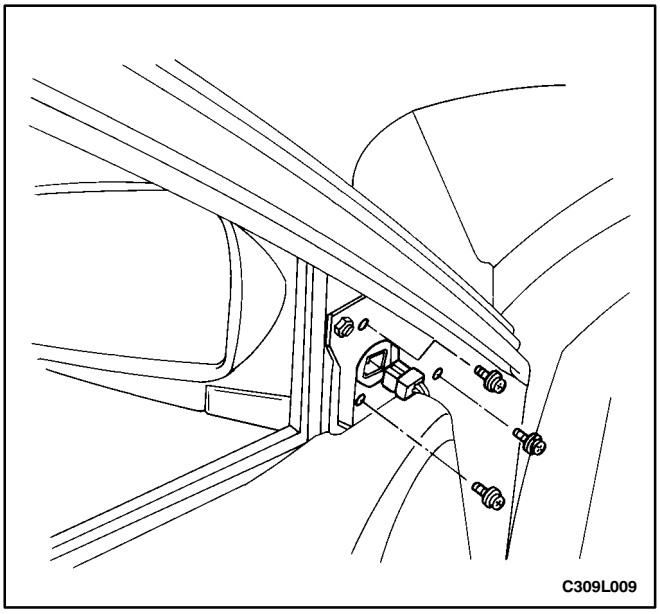

ELECTRIC CONTROL OUTSIDE REARVIEW MIRRORS

Removal Procedure

1. Remove the front door escutcheon.
2 Disconnect the mirror electrical connector.
3. Remove the bolts and the outside rearview mirror assembly from the door.

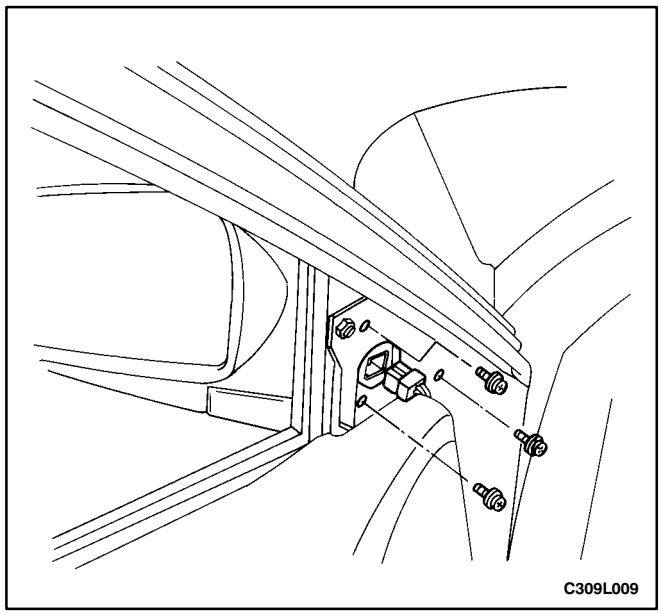

Installation Procedure

Notice: Dissimilar metals in direct contact with each other may corrode rapidly. Make sure to use the correct fasteners to prevent premature corrosion.

1. Install the outside rearview mirror assembly to the door with the screws.

   ### Tighten

   Tighten the outside rearview mirror assembly screws to 6 N•m (53 lb-in).

2. Connect the mirror electrical connector.
3. Install the front door escutcheon.

GENERAL DESCRIPTION AND SYSTEM OPERATION

STATIONARY GLASS

Stationary glass consists of all the glass on the vehicle which is immovable within its frame, such as the windshield glass, the back glass, and the inside rearview mirror.

ELECTRIC CONTROL HEATED OUTSIDE REARVIEW MIRRORS

Electric control heated outside rearview mirrors are standard. The electric control is located on the driver door. The mirror defogger is activated when the rear window defogger switch is turned on.

INSIDE REARVIEW MIRROR

The rearview mirror pivots at the ball-and-socket mirror pivot and can be manually adjusted up/down and left/right.

SECTION 9M

EXTERIOR TRIM

TABLE OF CONTENTS

Specifications 9M-1
Fastener Tightening Specifications 9M-1
Maintenance and Repair 9M-2
On-Vehicle Service 9M-2
B-Pillar Molding 9M-2
Roof Molding 9M-2
Rocker Panel Molding 9M-3
Mud Guards 9M-4
General Description and System Operation 9M-5
Emblems and Lettering 9M-5
Mud Guards 9M-5

SPECIFICATIONS

FASTENER TIGHTENING SPECIFICATIONS

Application	N•m	Lb-Ft	Lb-In
B-Pillar Molding Screws	4	–	35
Mud Guard Bolts	2	–	18

MAINTENANCE AND REPAIR

ON-VEHICLE SERVICE

B-PILLAR MOLDING

Removal Procedure

1. Reposition the weatherstrip in order to access the screws.
2. Remove the screws and the B-pillar molding.

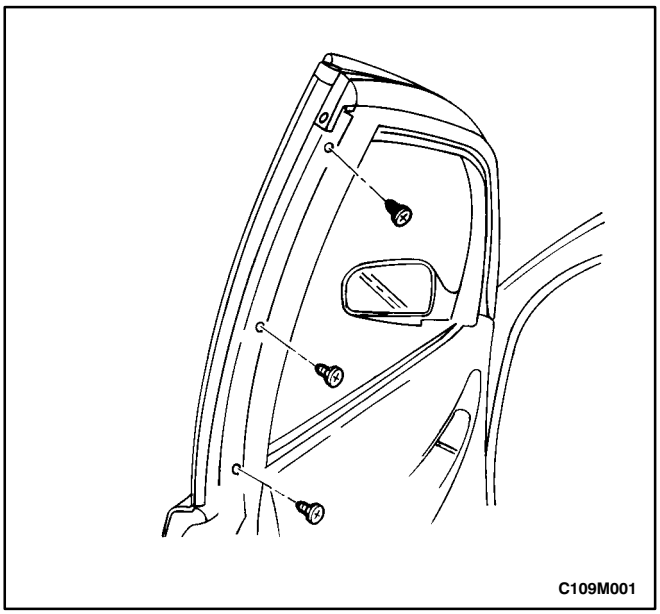

Installation Procedure

Notice: Dissimilar metals in direct contact with each other may corrode rapidly. Make sure to use the correct fasteners to prevent premature corrosion.

1. Install the screws and the B-pillar molding.

   Tighten

   Tighten the B-pillar molding screws to 4 N•m (35 lb-in).
2. Install the weatherstrip to its original position.

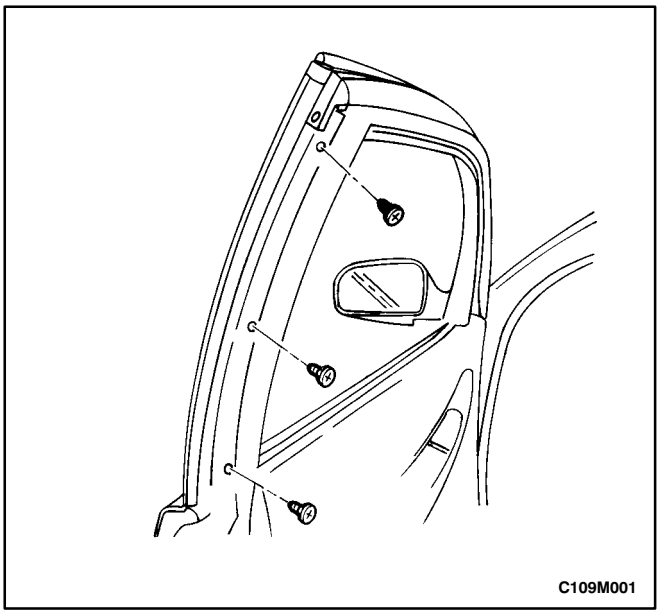

ROOF MOLDING

Removal Procedure

1. Remove the roof molding from the metal clips.

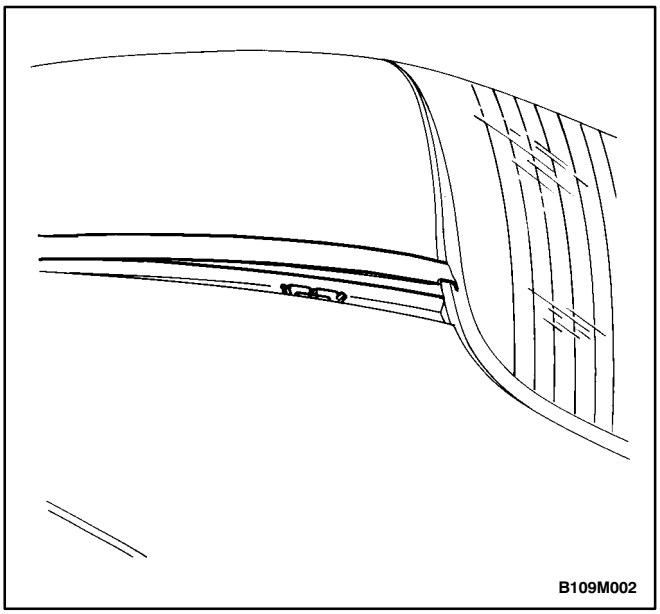

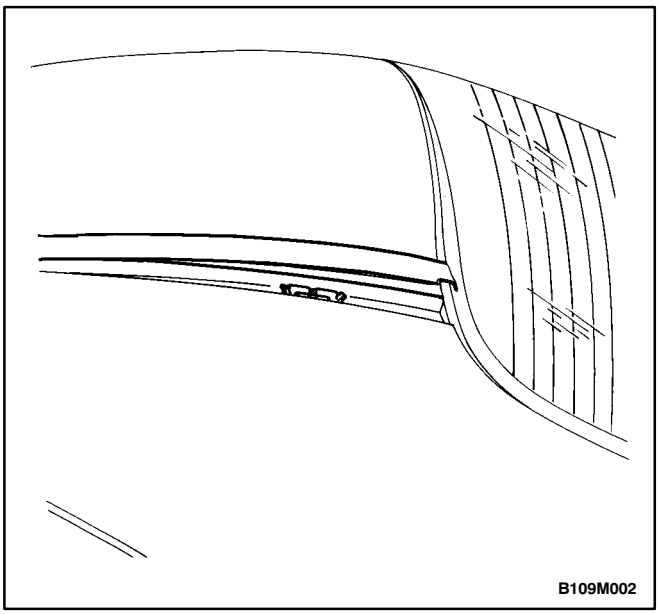

Installation Procedure

1. Press the roof molding onto the metal clips.

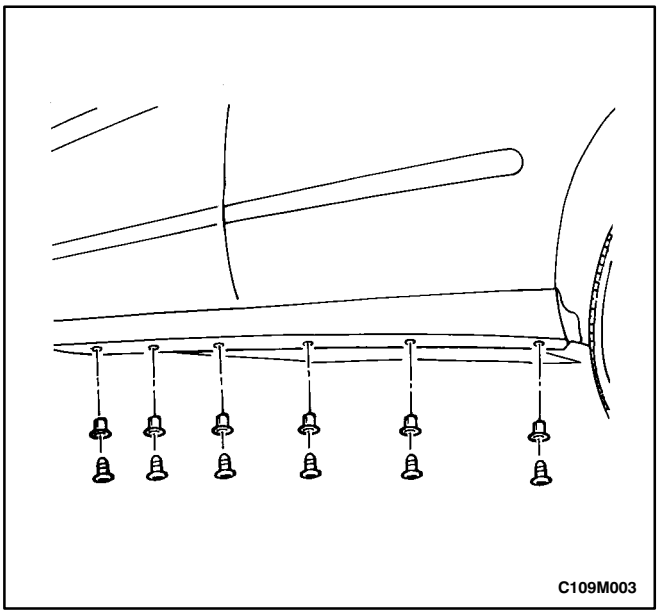

ROCKER PANEL MOLDING

Removal Procedure

1. Remove the front mud guards. Refer to “Mud Guards” in this section.
2. Remove the screws and the rocker panel molding.

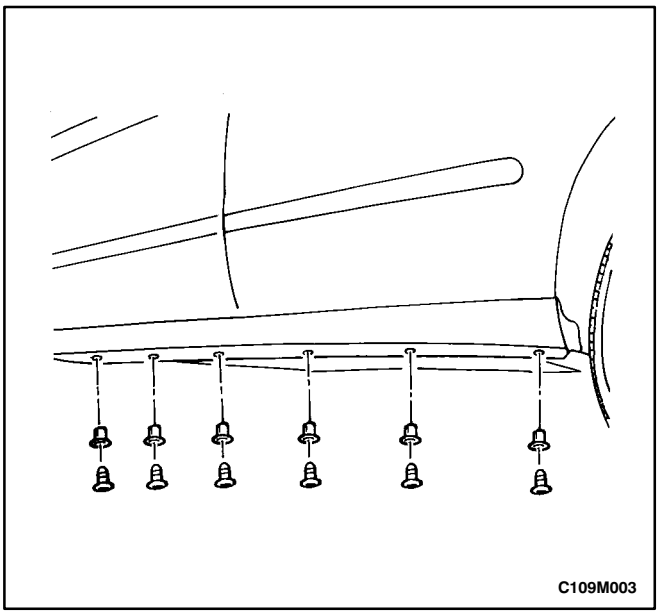

Installation Procedure

1. Install the rocker panel molding with the screws.
2. Install the front mud guards. Refer to “Mud Guards” in this section.

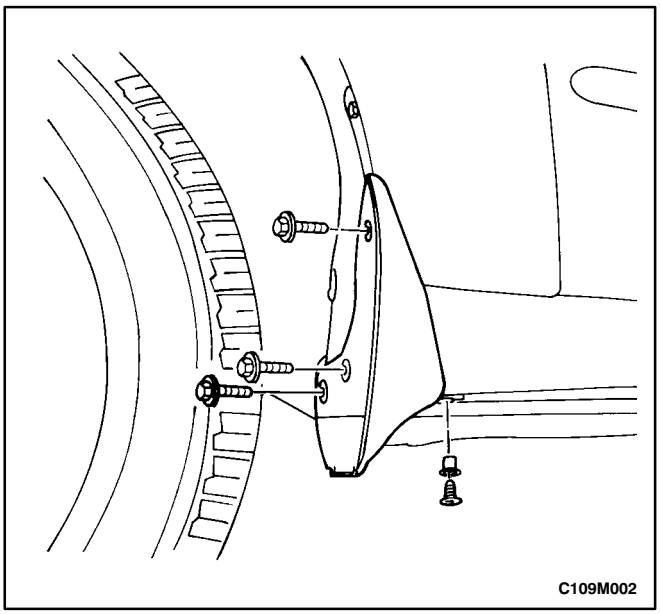

MUD GUARDS

Removal Procedure

1. Remove the screw and the bolts and the mud guard.

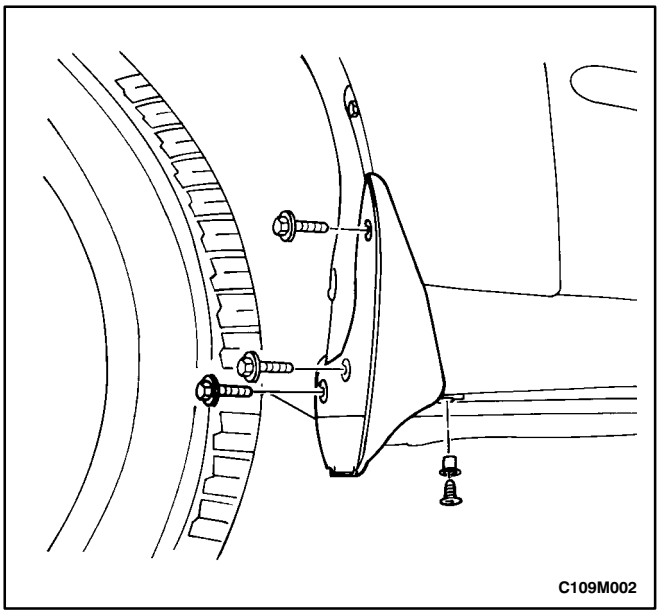

Installation Procedure

Notice: Dissimilar metals in direct contact with each other may corrode rapidly. Make sure to use the correct fasteners to prevent premature corrosion.

1. Install the mud guard with the bolts and the screw.

Tighten

Tighten the mud guard bolts to 2 N•m (18 lb-in).

GENERAL DESCRIPTION AND SYSTEM OPERATION

EMBLEMS AND LETTERING

The emblems and lettering on the vehicle are attached by adhesive. The company emblem appears on the hood. The lettering, which appears in several places on the body of the vehicle, features the model, the grade, and the company name.

MUD GUARDS

Front and rear mud guards are standard equipment on all models. Mud guards will help prevent an excessive buildup of mud on the body.

SECTION 9N

FRAME AND UNDERBODY

TABLE OF CONTENTS

Specifications 9N-1
Fastener Tightening Specifications 9N-1
Underbody Dimensions 9N-1
Maintenance and Repair 9N-3
On-Vehicle Service 9N-3
Alignment Checking 9N-3
Floor Pan Insulators 9N-3
Engine Under Covers 9N-4
Center Member 9N-4
General Description and System Operation 9N-6
General Body Construction 9N-6
Engine Under Covers 9N-6

SPECIFICATIONS

FASTENER TIGHTENING SPECIFICATIONS

Application	N•m	Lb-Ft	Lb-In
Center Member-to-Crossmember Bolt	90	66	–
Center Member-to-Radiator Bolt	90	66	–
Engine Under Cover Bolts	10	–	89
Forward Engine Mount Through-Bolt	80	59	–
Rear Engine Mount Through-Bolt	80	59	–

UNDERBODY DIMENSIONS

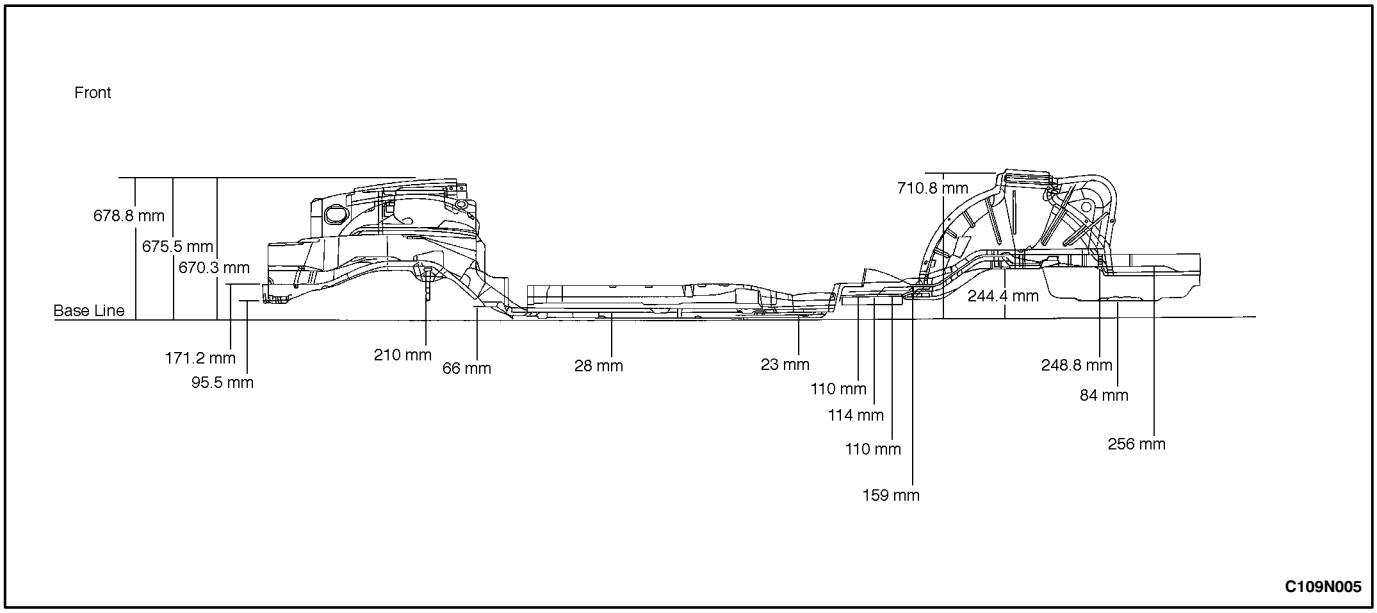

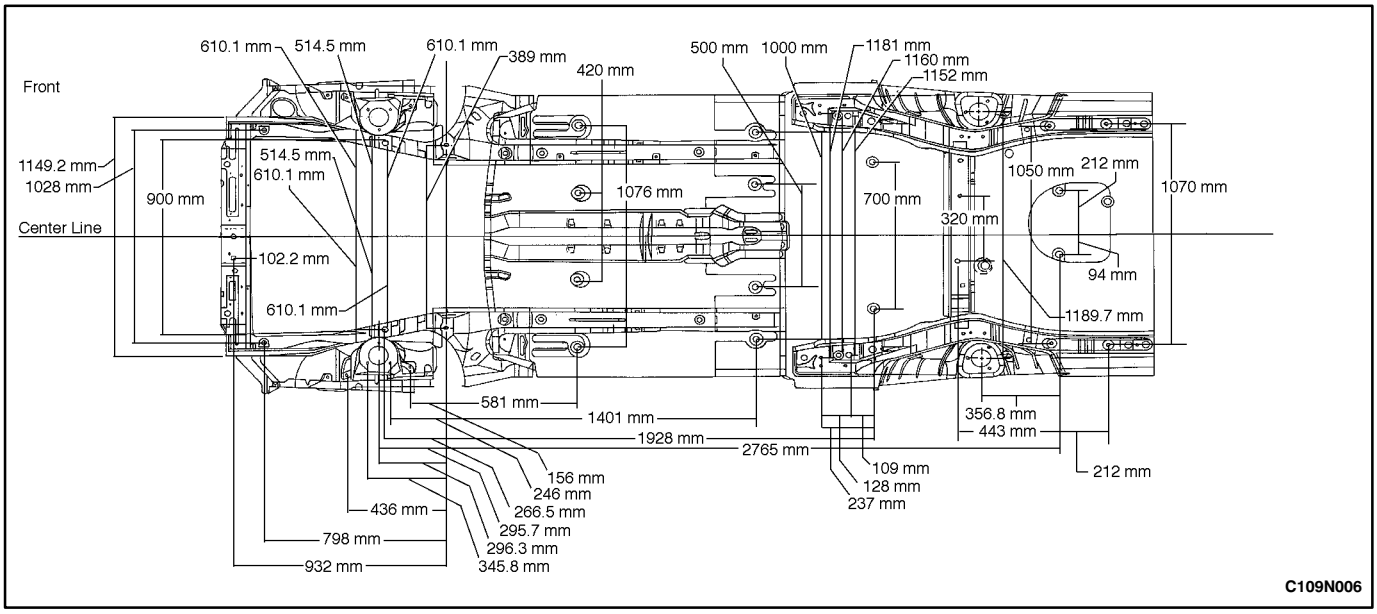
Front
610.1 mm
514.5 mm
610.1 mm
389 mm
420 mm
500 mm
1000 mm
1181 mm
1160 mm
1152 mm
1149.2 mm
1028 mm
900 mm
514.5 mm
610.1 mm
1076 mm
700 mm
1050 mm
212 mm
1070 mm
320 mm
Center Line
102.2 mm
94 mm
610.1 mm
1189.7 mm
581 mm
1401 mm
1928 mm
2765 mm
356.8 mm
443 mm
212 mm
156 mm
246 mm
266.5 mm
295.7 mm
296.3 mm
345.8 mm
436 mm
798 mm
932 mm
109 mm
128 mm
237 mm
C109N006

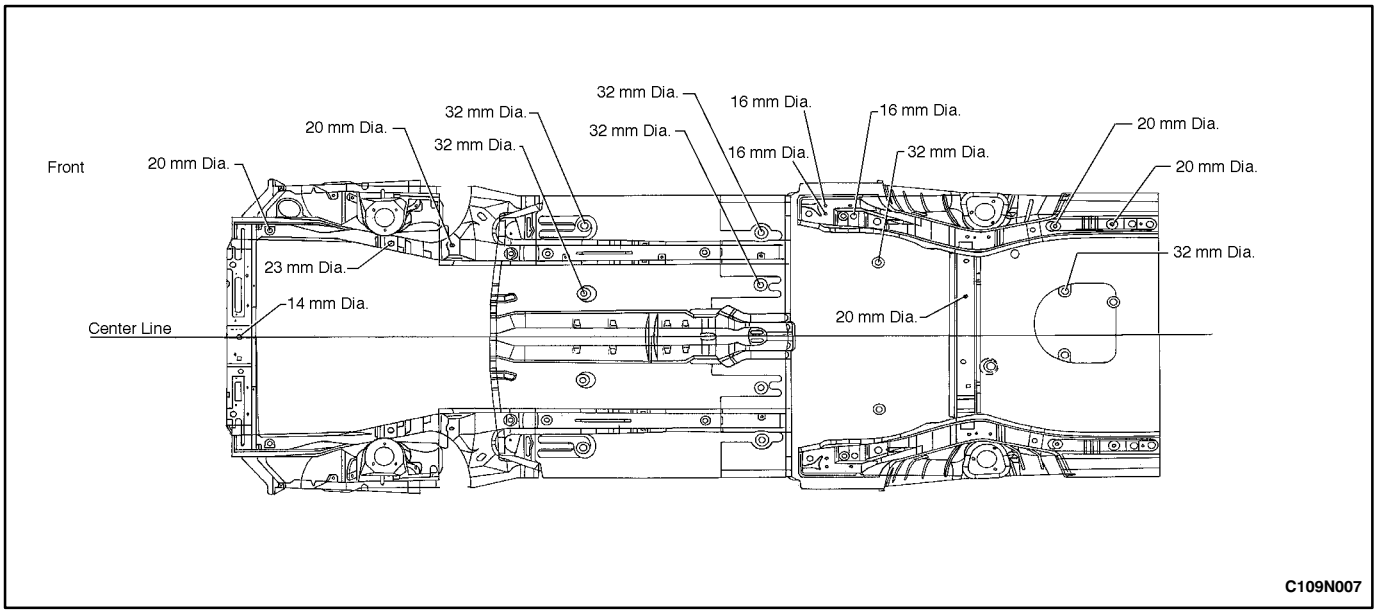
Front
20 mm Dia.
32 mm Dia.
20 mm Dia.
32 mm Dia.
32 mm Dia.
16 mm Dia.
16 mm Dia.
32 mm Dia.
16 mm Dia.
32 mm Dia.
20 mm Dia.
20 mm Dia.
23 mm Dia.
32 mm Dia.
14 mm Dia.
Center Line
20 mm Dia.
C109N007

MAINTENANCE AND REPAIR ON-VEHICLE SERVICE

ALIGNMENT CHECKING

An accurate method of determining the alignment of the underbody uses a measuring tram gauge. The tram gauge set used to perform the recommended measuring checks must include a vertical pointer able to reach 457 mm (18 inches).

Two types of measurements can be made with a tram gauge: direct point-to-point measurements and measurements calculated on a horizontal plane (datum line) parallel to the underbody. Point-to-point measurements are generally taken on steering and suspension engine compartment parts and simply require the vertical pointers to be set equally.

For horizontal plane measurements, the vertical pointers must be set as specified for each point to be measured.

Dimensions-to-gauge holes are measured to the center of the holes and flush to the adjacent surface metal unless otherwise specified. It is recommended that the diagonal dimensions to the cross-body be checked on both sides in order to verify the dimensional accuracy of the vehicle underbody.

FLOOR PAN INSULATORS

The floor pan insulators have been designed for the higher floor pan temperatures that result from the use of the catalytic converter in the exhaust system. Therefore, when servicing a vehicle, it is essential that any insulators that may have been disturbed or removed be reinstalled in the original sequence and location. Also, if an insulator needs to be replaced, use only the insulation specified for that location on the floor pan.

When servicing or replacing interior insulators, observe the following instructions.

- Install the insulators in the original position and sequence. Butt the pieces together in order to avoid gapping or overlapping.
- If it is necessary to replace an insulator, use only the specified insulation.
- Use the original part to determine the amount of replacement material required and as a template for cutting and fitting the new piece to the floor pan.
- When installing the insulator, do not enlarge any cutouts or holes that are used for the attachment of interior parts such as the instrument panel or the floor console.
- Route the cross-body harness for interior parts over the floor pan insulators. Clip it in the original location.
- Do not apply spray-on deadeners or trim adhesives to the top of the floor pan at the area directly over the catalytic converter or the muffler.

Any insulator service repair or replacement should be the same thickness, size, and location as the original installation in the vehicle.

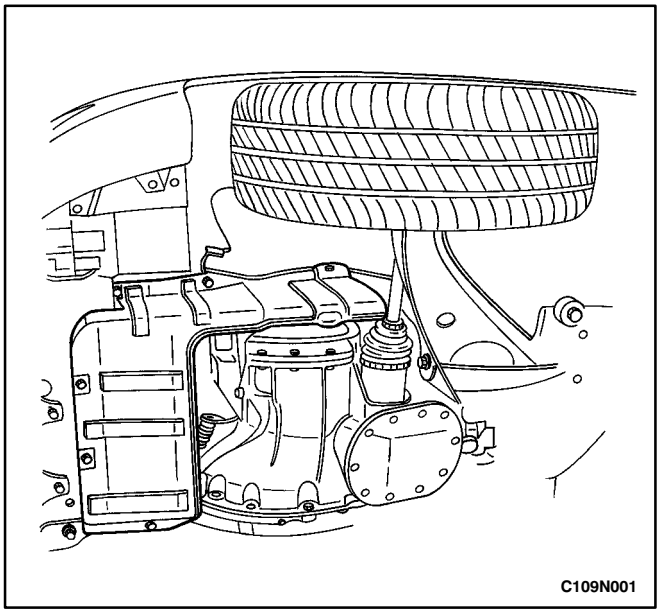

ENGINE UNDER COVERS

Removal Procedure

1. Raise and suitably support the vehicle.
2. Remove the bolts and the engine under cover.

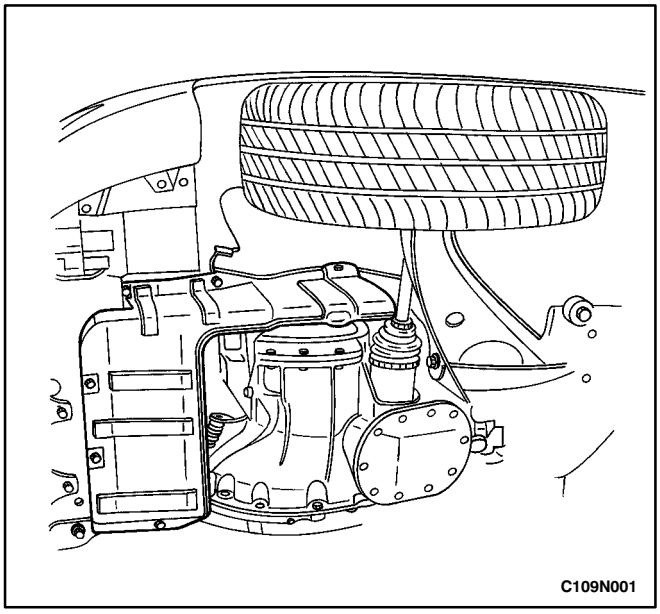

Installation Procedure

1. Install the engine under cover with the bolts.

   Tighten

   Tighten the engine under cover bolts to 10 N•m (89 lb-in).
2. Lower the vehicle.

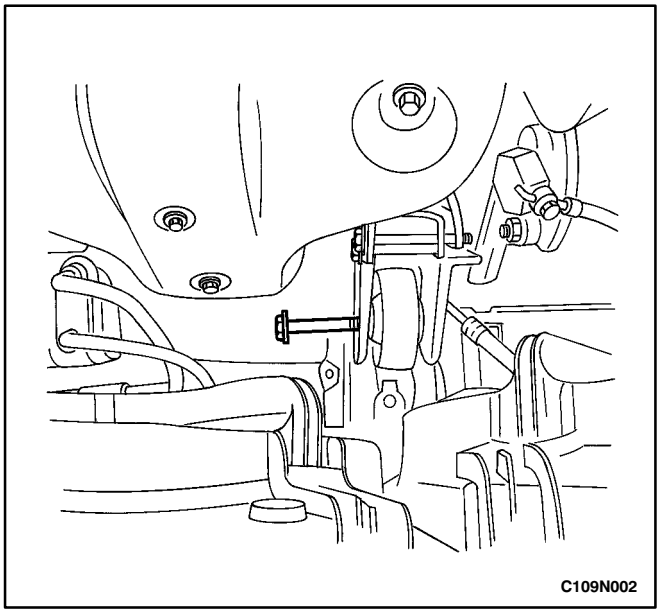

CENTER MEMBER

Removal Procedure

1. Remove the engine under covers. Refer to “Engine Under Covers” in this section.
2. Remove the screws and reposition the power steering return line.
3. Remove the forward engine mount through-bolt.

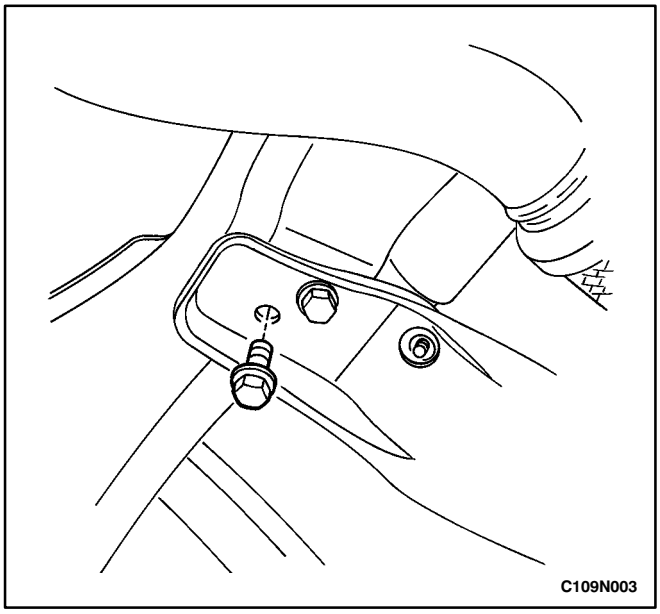

4. Remove the rear engine mount through-bolt.
5. Remove the bolts and the center member (center member-to-crossmember bolt shown).

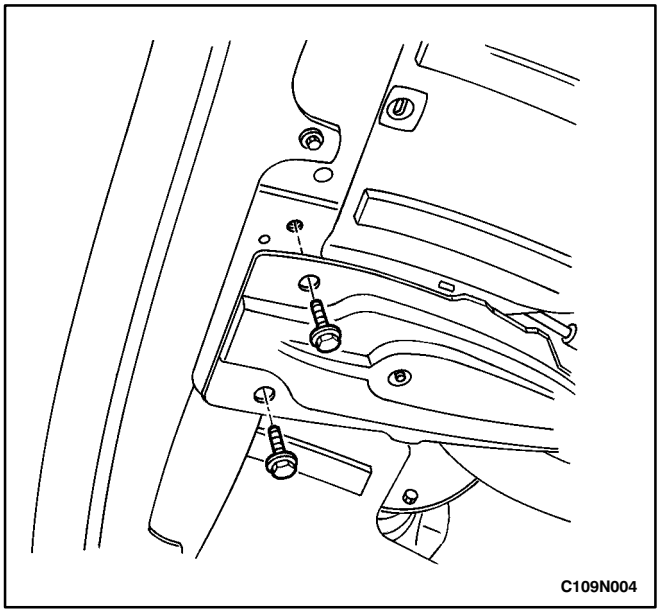

Installation Procedure

1. Install the center member with the bolts (center member-to-radiator bolt shown).

Tighten

Tighten the center member-to-crossmember bolt to 90 N•m (66 lb-ft).

Tighten the center member-to-radiator bolt to 90 N•m (66 lb-ft).

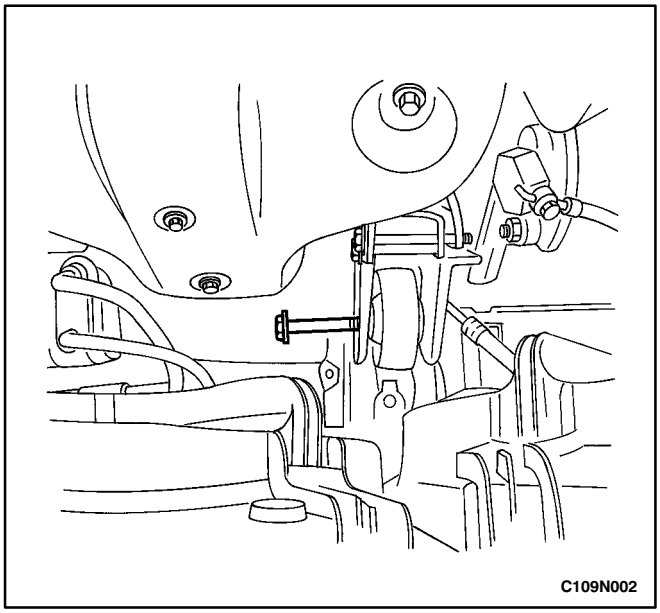

2. Install the rear engine mount through-bolt.

Tighten

Tighten the rear engine mount through-bolt to 80 N•m (59 lb-ft).

3. Install the forward engine mount through-bolt.

Tighten

Tighten the forward engine mount through-bolt to 80 N•m (59 lb-ft).

4. Install the power steering return line to its original position and install the screws.
5. Install the engine under covers. Refer to “Engine Under Covers” in this section.

GENERAL DESCRIPTION AND SYSTEM OPERATION

GENERAL BODY CONSTRUCTION

This vehicle is constructed with a unitized body which incorporates integral front and rear frame side rails.

The front suspension lower control arms are bolted to and retained by supports, one each on the right and left sides. The front suspension lower control arm supports are attached to the underbody with three bolts at two locations. The engine is bolted to the integral front side rails. The suspension strut towers must be dimensionally correct in relation to the remainder of the underbody in order to maintain specified suspension strut and caster/camber angles.

Since the individual underbody parts contribute directly to the overall strength of the body, it is essential to observe proper welding techniques during service repair operations. The underbody parts should be properly sealed and rustproofed whenever body repair operations destroy or damage the original sealing and rustproofing. When rustproofing critical underbody parts, use a good-quality type of air-dry primer, such as a corrosion-resistant chromate or an equivalent material. Combination-type primer/surfacers are not recommended.

ENGINE UNDER COVERS

The engine under covers are molded pieces of plastic that serve as shields for the underside of the engine. The covers help protect the engine from small rocks, gravel and other objects that would otherwise come into contact with the engine during normal driving conditions.

SECTION 9O

BUMPERS AND FASCIAS

CAUTION: Disconnect the negative battery cable before removing or installing any electrical unit or when a tool or equipment could easily come in contact with exposed electrical terminals. Disconnecting this cable will help prevent personal injury and damage to the vehicle. The ignition must also be in LOCK unless otherwise noted.

TABLE OF CONTENTS

Specifications 9O-1
Fastener Tightening Specifications 9O-1
Maintenance and Repair 9O-2
On-Vehicle Service 9O-2
Front Bumper Fascia 9O-2
Front Bumper Energy Absorber (5 mph Bumper Assembly) 9O-4
Front Bumper Impact Bar 9O-4
Rear Bumper Fascia 9O-5
Rear Bumper Energy Absorber (5 mph Bumper Assembly) 9O-8
Rear Bumper Impact Bar 9O-8
General Description and System Operation 9O-10
Bumpers 9O-10

SPECIFICATIONS

FASTENER TIGHTENING SPECIFICATIONS

Application	N•m	Lb-Ft	Lb-In
Fender-to-Fascia Bolts	10	–	89
Fender-to-Fascia Screws	2.5	–	22
Front Impact Bar Bolts	39	29	–
Lower Fascia Bolts	10	–	89
Luggage Compartment Fascia Bolts	2	–	18
Rear Impact Bar Nuts	9	–	80
Rear Wheel Well Fascia Bolts	2	–	18
Rear Wheel Well Splash Shield Bolts	2	–	18

MAINTENANCE AND REPAIR

ON-VEHICLE SERVICE

FRONT BUMPER FASCIA

Removal Procedure

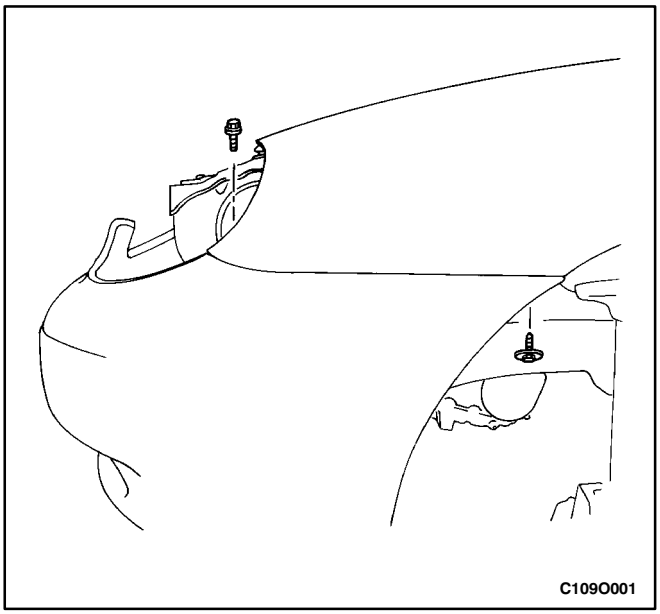

1. Disconnect the negative battery cable.
2. Remove the front wheel well splash shields. Refer to *Section 9R, Body Front End*.
3. Remove the turn signal lamps, the fog lamps, and the headlamps. Refer to *Section 9B, Lighting Systems*.
4. Remove the fender-to-fascia bolts and the screws.

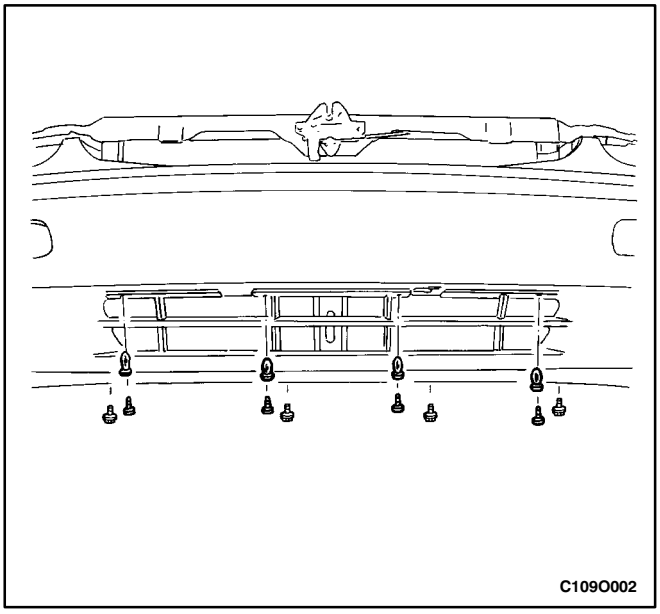

5. Remove the lower fascia screws and the bolts.

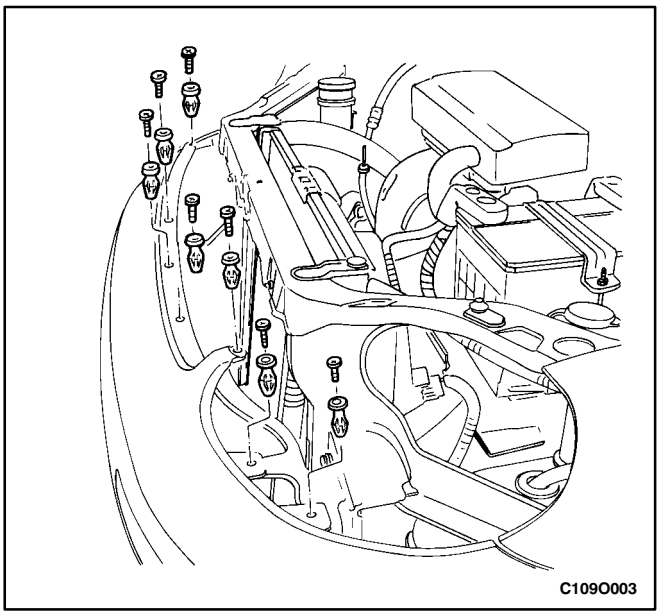

6. Remove the upper fascia screws.
7. Remove the front bumper fascia.

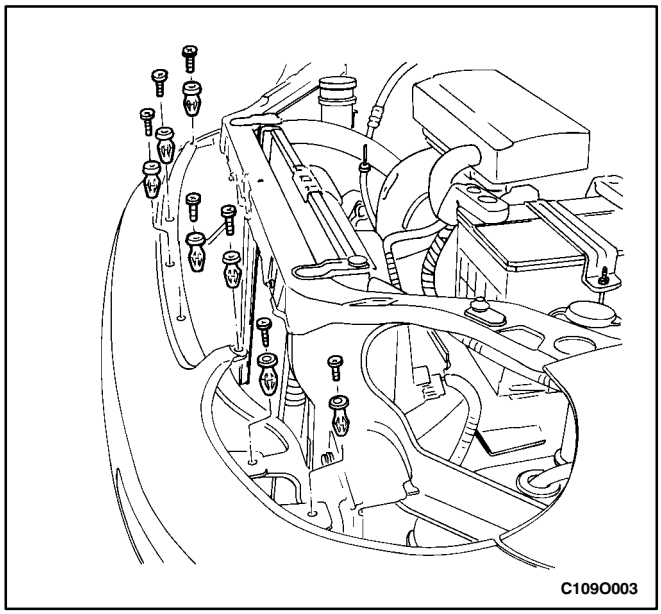

Installation Procedure

1. Install the front bumper fascia.

Notice: Dissimilar metals in direct contact with each other may corrode rapidly. Make sure to use the correct fasteners to prevent premature corrosion.

2. Install the upper fascia screws.

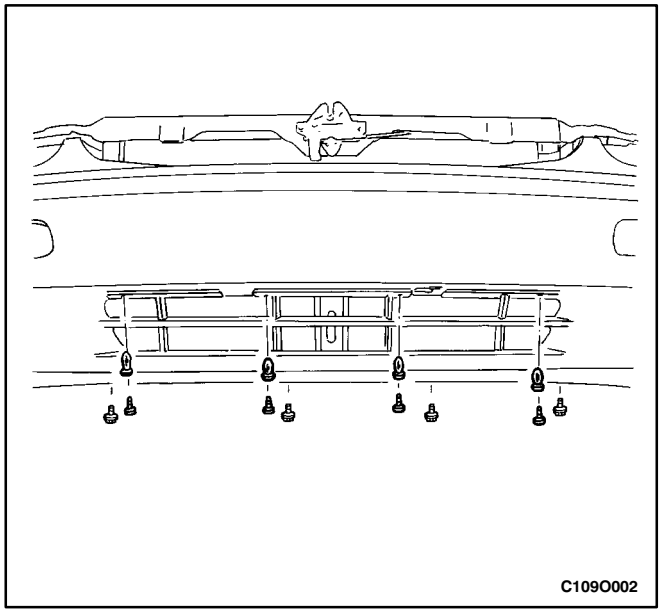

3. Install the lower fascia screws and the bolts.

Tighten

Tighten the lower fascia bolts to 10 N•m (89 lb-in).

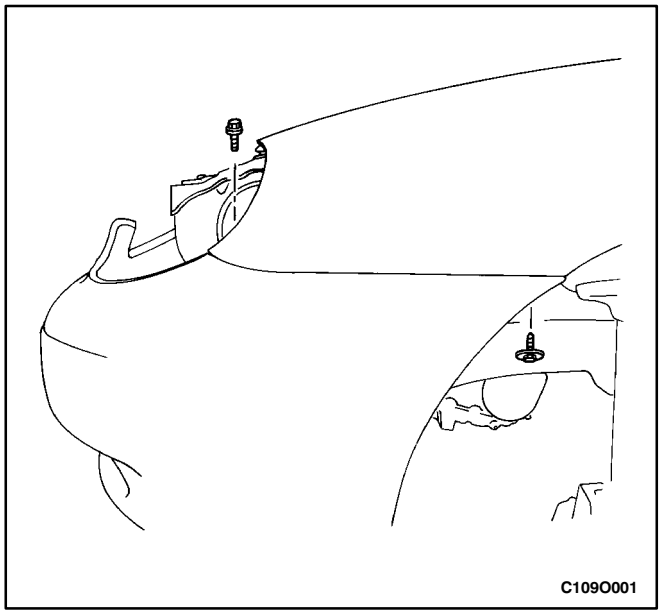

4. Install the fender-to-fascia bolts and the screws.

Tighten

Tighten the fender-to-fascia bolts to 10 N•m (89 lb-in).

Tighten the fender-to-fascia screws to 2.5 N•m (22 lb-in).

5. Install the headlamps, the fog lamps, and the turn signal lamps. Refer to *Section 9B, Lighting Systems*.
6. Install the front wheel well splash shields. Refer to *Section 9R, Body Front End*.
7. Connect the negative battery cable.

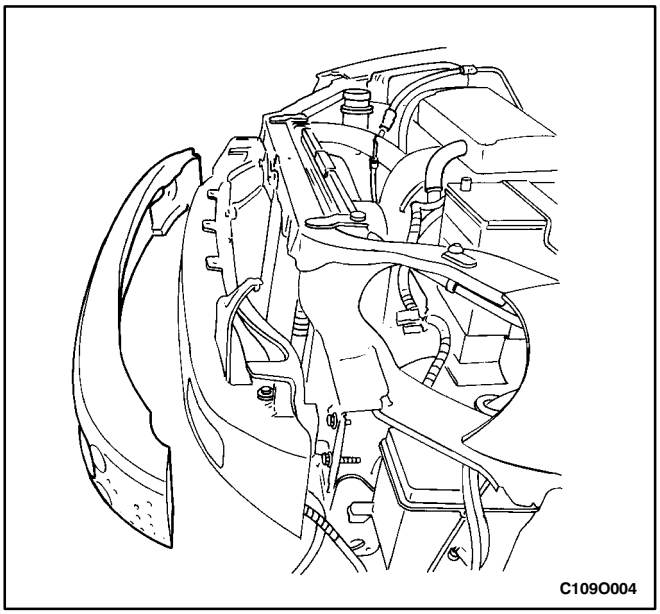

FRONT BUMPER ENERGY ABSORBER (5 MPH BUMPER ASSEMBLY)

Removal Procedure

1. Remove the front bumper fascia. Refer to “Front Bumper Fascia” in this section.
2. Remove the energy absorber.

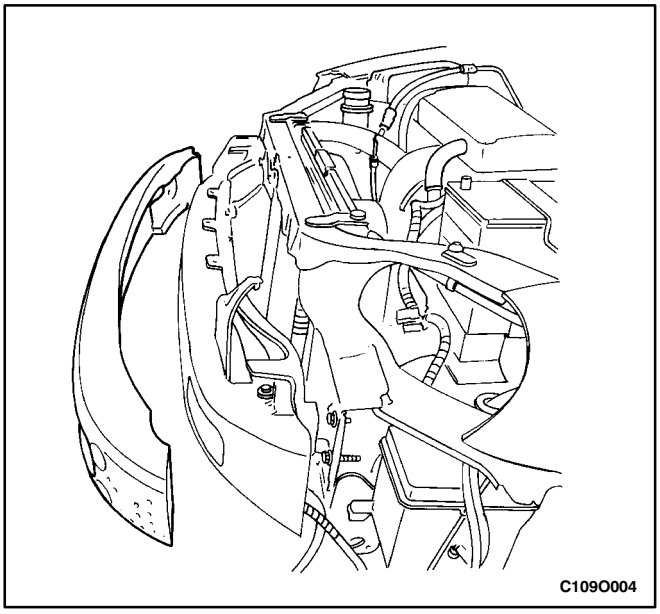

Installation Procedure

1. Install the energy absorber.
2. Install the front bumper fascia. Refer to “Front Bumper Fascia” in this section.

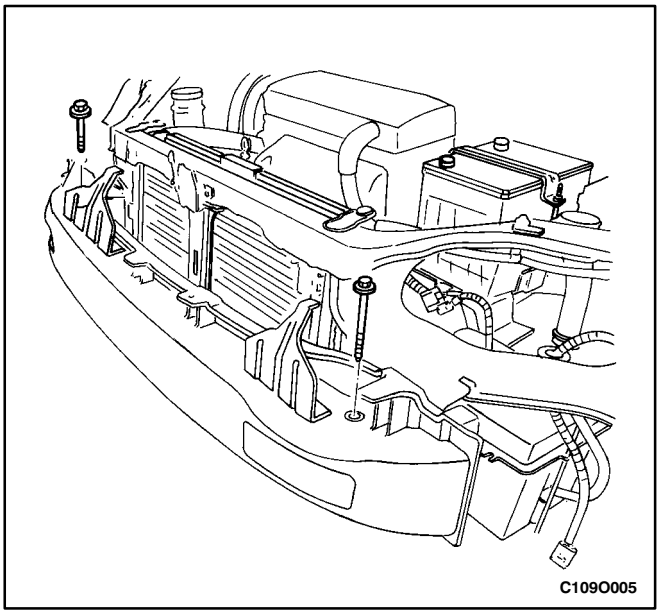

FRONT BUMPER IMPACT BAR

Removal Procedure

1. Remove the front bumper fascia. Refer to “Front Bumper Fascia” in this section.
2. Remove the front bumper energy absorber, if equipped. Refer to “Front Bumper Energy Absorber (5 mph Bumper Assembly)” in this section.
3. Disconnect the electrical connector.
4. Remove the bolts and the front bumper impact bar (5 mph bumper assembly shown, 2.5 mph bumper assembly similar).

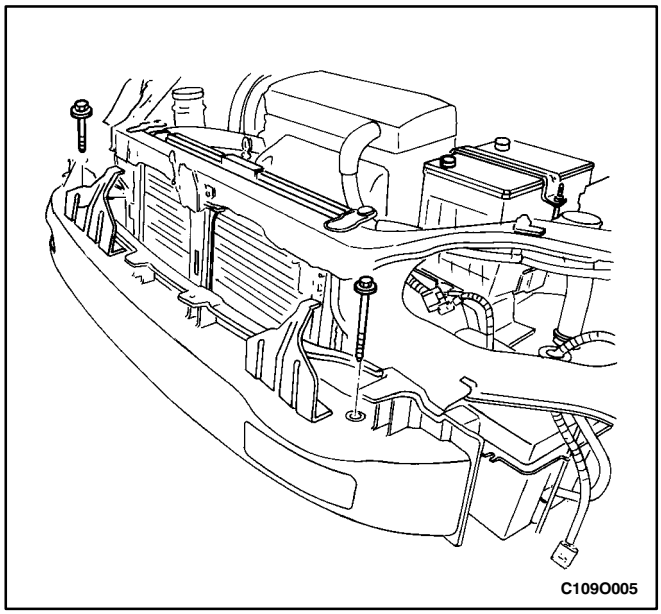

Installation Procedure

Notice: Dissimilar metals in direct contact with each other may corrode rapidly. Make sure to use the correct fasteners to prevent premature corrosion.

1. Install the front impact bar with the bolts (5 mph bumper assembly shown, 2.5 mph bumper assembly similar).

   ### Tighten

   Tighten the front impact bar bolts to 39 N•m (29 lb-ft).
2. Connect the electrical connector.
3. Install the front bumper energy absorber, if equipped. Refer to “Front Bumper Energy Absorber (5 mph Bumper Assembly)” in this section.
4. Install the front bumper fascia. Refer to “Front Bumper Fascia” in this section.

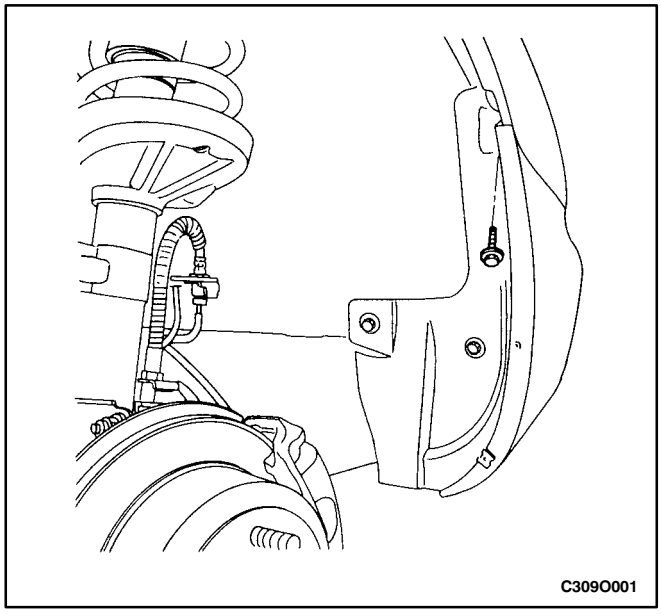

REAR BUMPER FASCIA

Removal Procedure

1. Remove the rear wheels. Refer to *Section 2E, Tires and Wheels*.
2. Remove the rear wheel mud guards. Refer to *Section 9M, Exterior Trim*.
3. Remove the fascia bolts at the top of the rear wheel wells.

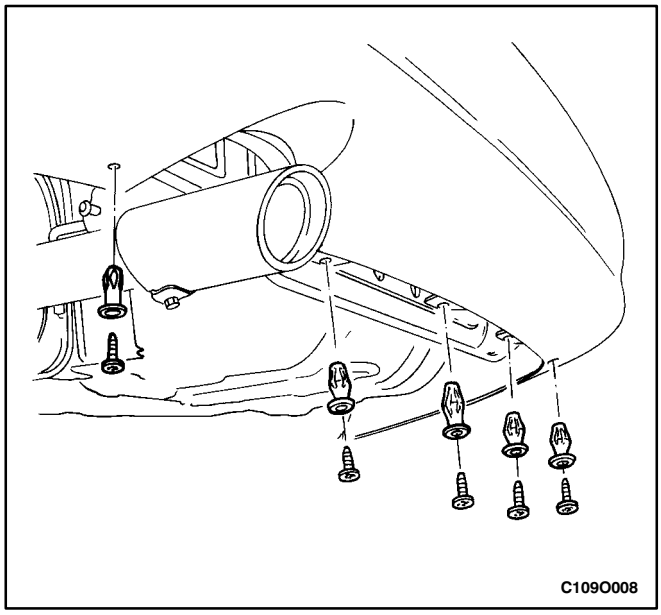

4. Remove the lower fascia screws.

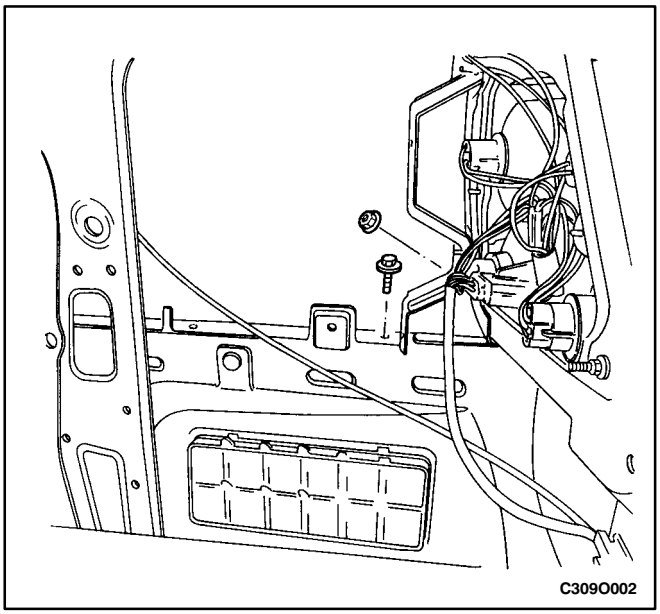

5. Remove the luggage compartment wheelhouse trim panel. Refer to *Section 9G, Interior Trim*.
6. Remove the fascia bolts in the luggage compartment.

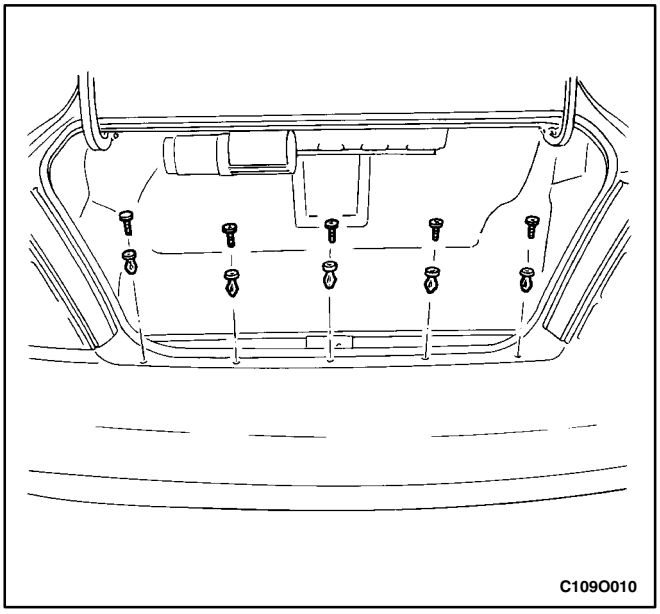

7. Remove the upper fascia screws.
8. Remove the fascia.

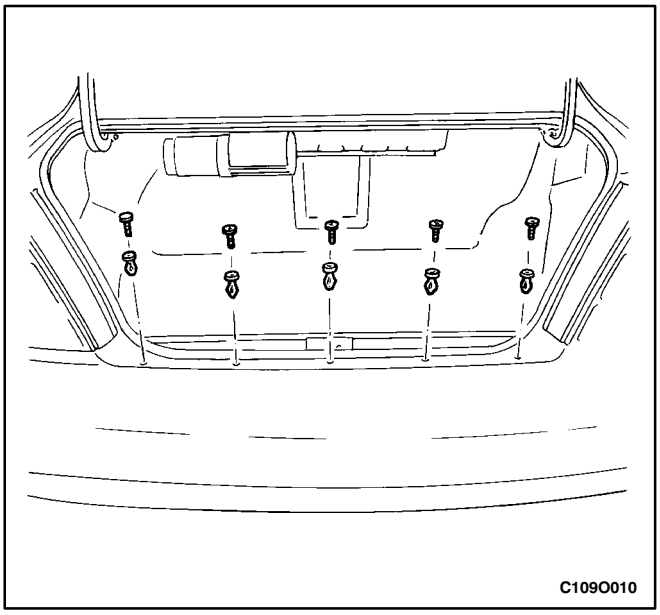

Installation Procedure

1. Install the fascia.
2. Install the upper fascia screws.

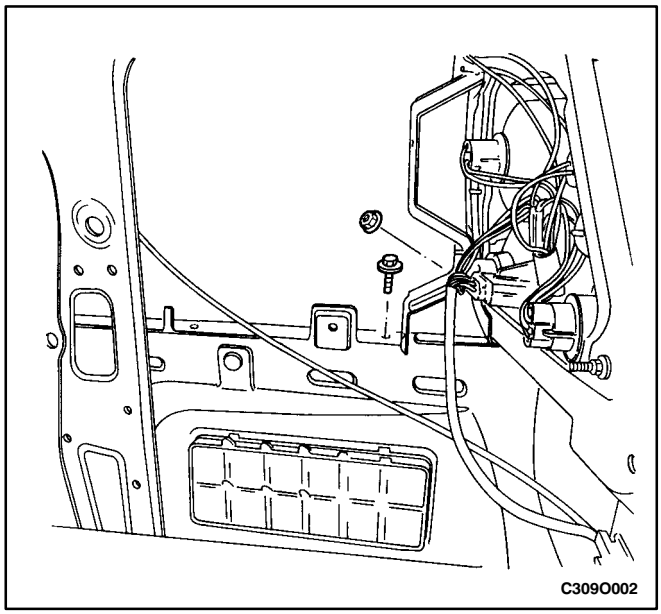

Notice: Dissimilar metals in direct contact with each other may corrode rapidly. Make sure to use the correct fasteners to prevent premature corrosion.

3. Install the luggage compartment fascia bolts.

Tighten

Tighten the luggage compartment fascia bolts to 2 N•m (18 lb-in).

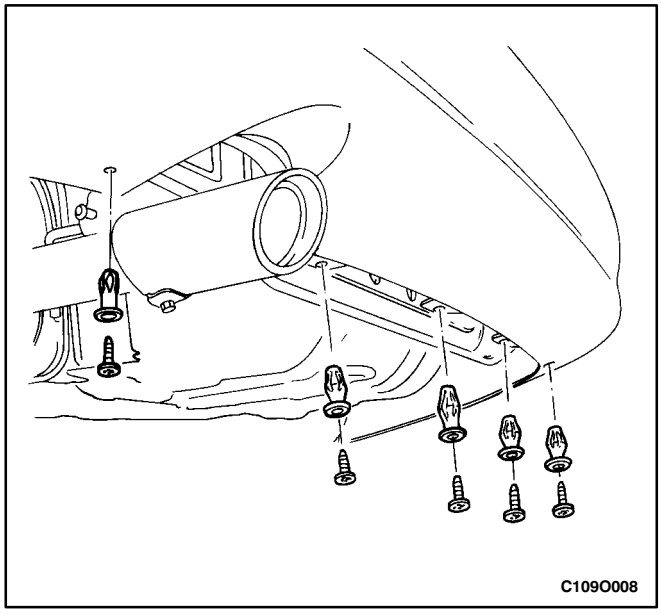

4. Install the luggage compartment wheelhouse trim panel. Refer to *Section 9G, Interior Trim*.
5. Install the lower fascia screws.

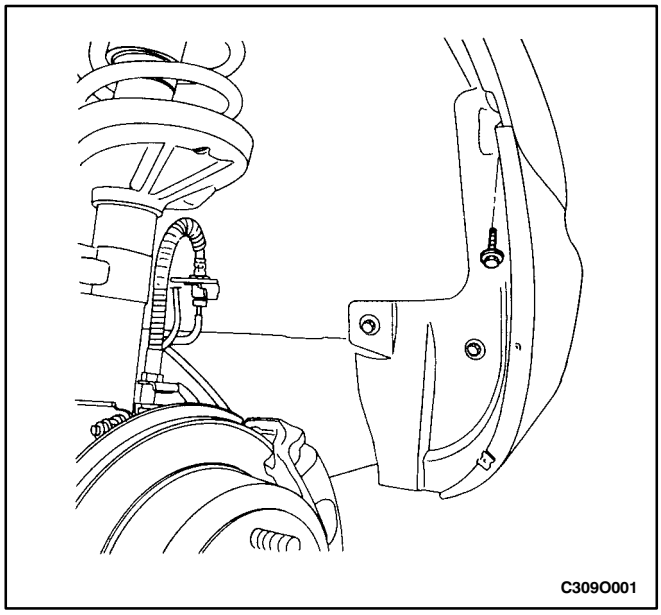

6. Install the rear wheel well fascia bolts.

Tighten

Tighten the rear wheel well fascia bolts to 2 N•m (18 lb-in).

7. Install the rear wheel mud guards. Refer to *Section 9M, Exterior Trim*.
8. Install the rear wheels. Refer to *Section 2E, Tires and Wheels.*

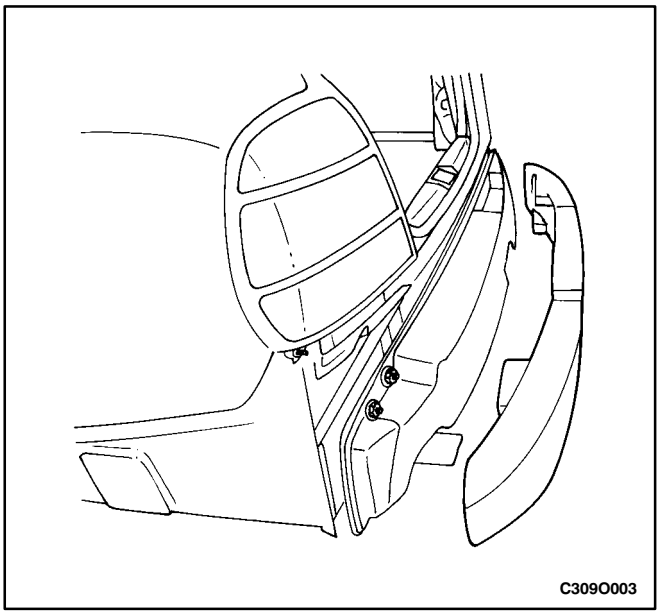

REAR BUMPER ENERGY ABSORBER (5 MPH BUMPER ASSEMBLY)

Removal Procedure

1. Remove the rear bumper fascia. Refer to “Rear Bumper Fascia” in this section.
2. Remove the energy absorber.

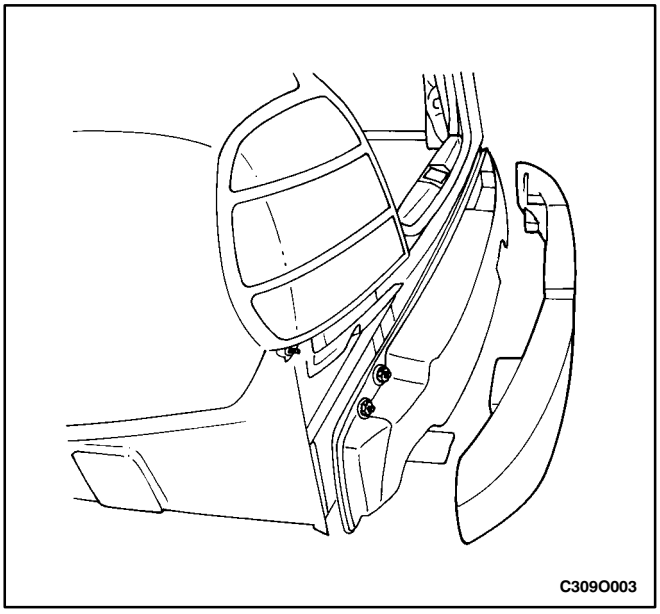

Installation Procedure

1. Install the energy absorber.
2. Install the rear bumper fascia. Refer to “Rear Bumper Fascia” in this section.

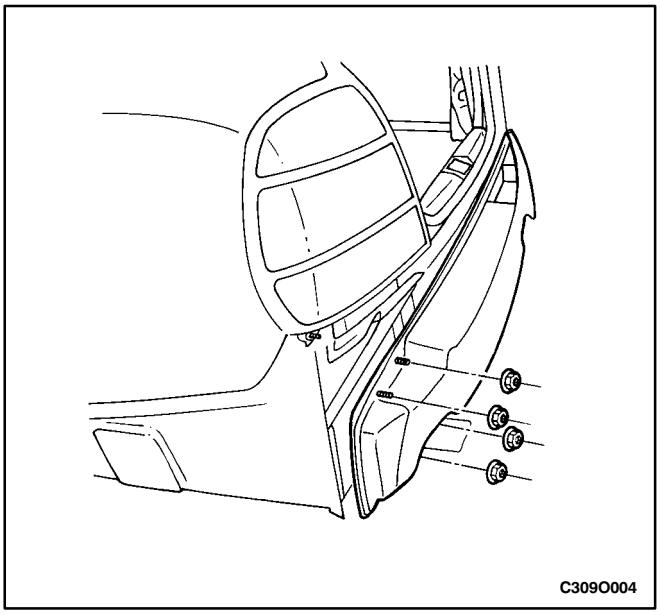

REAR BUMPER IMPACT BAR

Removal Procedure

1. Remove the rear bumper fascia. Refer to “Rear Bumper Fascia” in this section.
2. Remove the rear bumper energy absorber, if equipped. Refer to “Rear Bumper Energy Absorber (5 mph Bumper Assembly)” in this section.
3. Remove the nuts and the impact bar (5 mph bumper assembly shown, 2.5 mph bumper assembly similar).

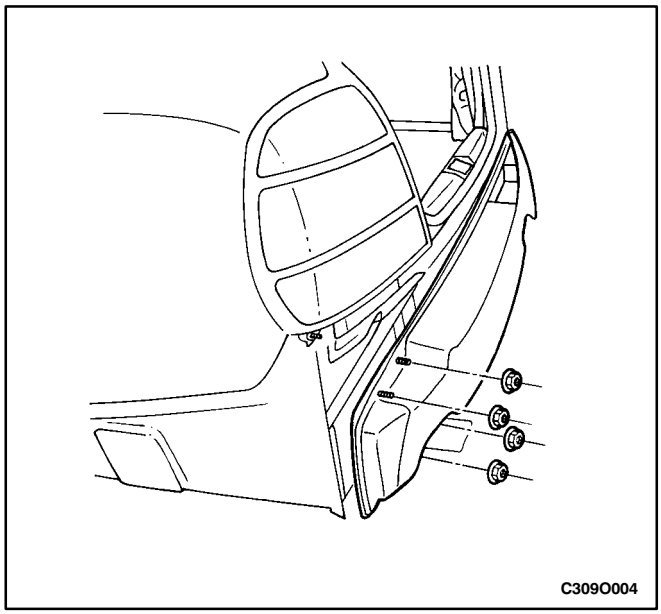

Installation Procedure

Notice: Dissimilar metals in direct contact with each other may corrode rapidly. Make sure to use the correct fasteners to prevent premature corrosion.

1. Install the impact bar with the nuts.

   ### Tighten

   Tighten the rear impact bar nuts to 9 N•m (80 lb-in).

2. Install the rear bumper energy absorber, if equipped. Refer to “Rear Bumper Energy Absorber (5 mph Bumper Assembly)” in this section.
3. Install the rear bumper fascia. Refer to “Rear Bumper Fascia” in this section (5 mph bumper assembly shown, 2.5 mph bumper assembly similar).

GENERAL DESCRIPTION AND SYSTEM OPERATION

BUMPERS

The bumper systems are designed to sustain a collision into a fixed barrier at either 8 km/h (5 mph) or 4 km/h (2.5 mph) without damage. After absorbing the energy of a collision, these bumper systems restore themselves to their original positions. The 8 km/h (5 mph) bumpers feature an internal foam energy absorber and a polymer fascia cover.

SECTION 9P

DOORS

CAUTION: Disconnect the negative battery cable before removing or installing any electrical unit or when a tool or equipment could easily come in contact with exposed electrical terminals. Disconnecting this cable will help prevent personal injury and damage to the vehicle. The ignition must also be in LOCK unless otherwise noted.

TABLE OF CONTENTS

Specifications 9P-2
Fastener Tightening Specifications 9P-2
Schematic and Routing Diagrams 9P-3
Power Door Locks 9P-3
Power Windows 9P-4
Diagnosis 9P-5
Power Door Locks 9P-5
Power Windows 9P-7
Maintenance and Repair 9P-9
On-Vehicle Service 9P-9
Outside Channel Molding 9P-9
Front Door Glass Run 9P-9
Door Weatherstrip 9P-10
Rear Door Glass Run 9P-11
Front Door Secondary Weatherstrip 9P-12
Rear Door Secondary Weatherstrip 9P-13
Front Door Opening Weatherstrip 9P-13
Rear Door Opening Weatherstrip 9P-14
Door Seal Trim 9P-15
Door Lock Striker 9P-16
Door Lock Striker Adjustment 9P-17
Front Door Lock 9P-18
Childproof Rear Door Lock 9P-18
Inside Door Handle 9P-20
Outside Door Handle 9P-20
Inside Lock Rod 9P-21
Door Lock Cylinder 9P-22
Power Window Regulator 9P-22
Manual Rear Window Regulator Handle 9P-23
Manual Rear Window Regulator 9P-24
Door Assembly 9P-24
Door Hinge 9P-26
Door Hold-Open Link 9P-26
General Description and System Operation 9P-28
Door Lock Striker 9P-28
Childproof Rear Door Lock 9P-28
Power Door Locks 9P-28
Power Windows 9P-28
Manual Rear Windows 9P-28

SPECIFICATIONS

FASTENER TIGHTENING SPECIFICATIONS

Application	N•m	Lb-Ft	Lb-In
Door Hinge-to-Body Bolts	39	29	–
Door Hinge-to-Door Bolts	20	15	–
Door Hold-Open Link-to-Body Bolt	25	18	–
Door Hold-Open Link-to-Door Bolts	7	–	62
Door Lock Striker Screws	20	15	–
Door Pull Bracket Screws	3	–	27
Front Door Lock Screws	8	–	71
Inside Door Handle Screw	3	–	27
Outside Channel Molding Screw	4	–	35
Outside Door Handle Bolts	4.5	–	40
Rear Door Guide Rail Bolts	7	–	62
Rear Door Guide Rail Screw	4	–	35
Rear Door Lock Screws	8	–	71
Window Regulator Nuts	7	–	62

SCHEMATIC AND ROUTING DIAGRAMS

POWER DOOR LOCKS

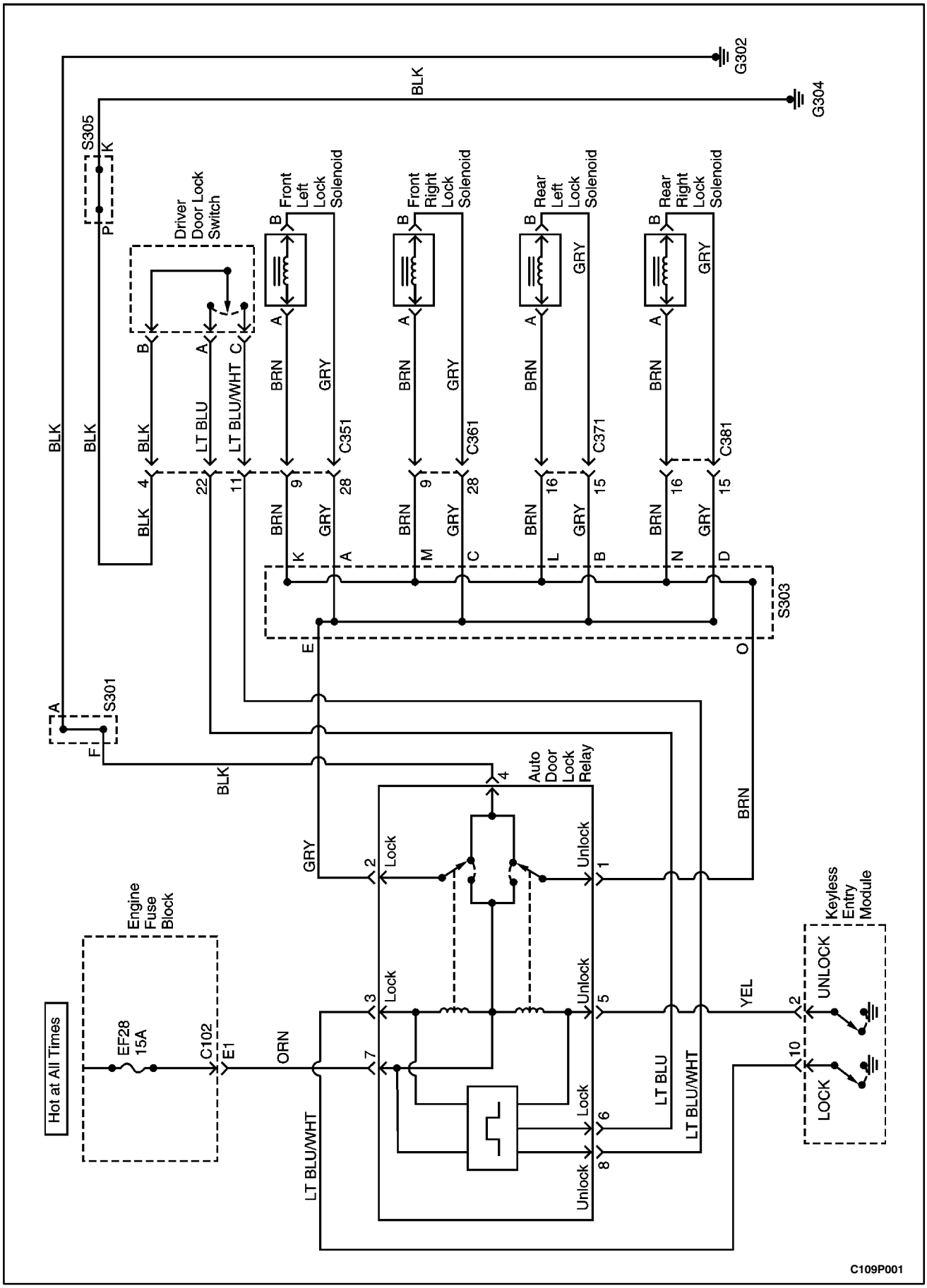

POWER WINDOWS
(Left-Hand Drive Shown, Right-Hand Drive Similar)

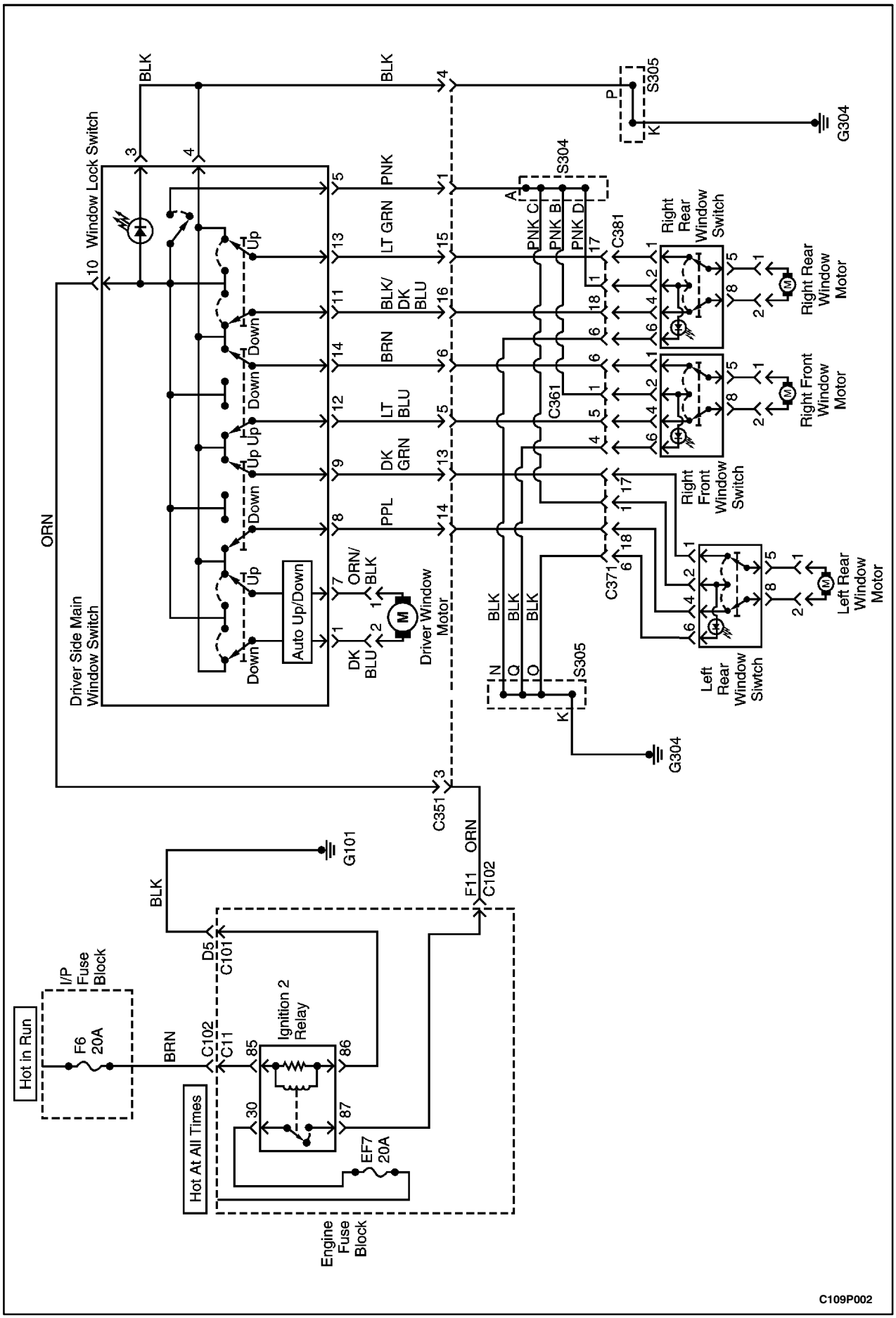

DIAGNOSIS

POWER DOOR LOCKS

Power Door Locks Do Not Operate At Any Door

Step	Action	Value	Yes	No
1	Check fuse EF28. Is fuse EF28 blown?	–	Go to *Step 2*	Go to *Step 3*
2	1. Check for a short circuit and repair it, if necessary. 2. Replace fuse EF28. Is the repair complete?	–	System OK	–
3	Check the voltage at fuse EF28. Is the voltage equal to the specified value?	11-14 V	Go to *Step 5*	Go to *Step 4*
4	Repair the power supply circuit for fuse EF28. Is the repair complete?	–	System OK	–
5	Check the voltage at terminal 5 (ORN) of the door lock relay connector. Is the voltage equal to the specified value?	11-14 V	Go to *Step 7*	Go to *Step 6*
6	Repair the open circuit between fuse EF28 and terminal 5 (ORN) of the door lock relay connector. Is the repair complete?	–	System OK	–
7	Use an ohmmeter to check continuity between terminal 8 (BLK) of the door lock relay connector and ground. Does the ohmmeter indicate the specified value?	≈ 0 Ω	Go to *Step 9*	Go to *Step 8*
8	Repair the open circuit between terminal 8 (BLK) of the door lock relay connector and ground. Is the repair complete?	–	System OK	–
9	1. Disconnect the door lock relay connector. 2. Connect a fused jumper wire to the positive battery terminal. 3. Connect another jumper wire to ground. 4. Apply the positive jumper wire to terminal 2 (GRY) of the door lock relay connector. 5. Apply the grounded jumper wire to terminal 3 (BRN) of the door lock relay connector. 6. Switch the jumper wires so that the positive jumper is connected to terminal 3 (BRN) and the grounded jumper is connected to terminal 2 (GRY). Do the doors lock and unlock when power and ground are applied to terminals 2 and 3 of the door lock relay connector?	–	Go to *Step 11*	Go to *Step 10*
10	Repair the open circuit between the door lock relay connector and S303. Is the repair complete?	–	System OK	–

Power Door Locks Do Not Operate At Any Door (Cont'd)

Step	Action	Value	Yes	No
11	1. Raise the power window in the driver's door. 2. Disconnect the door lock connector at the top of the door lock. (There are three connectors on the door lock. Use the schematic to verify the correct connector.) 3. Use an ohmmeter to check continuity between terminal B (BLK) of the door lock switch connector and ground. Does the ohmmeter indicate the specified value?	≈ 0 Ω	Go to *Step 13*	Go to *Step 12*
12	Repair the open circuit between the door lock switch connector terminal B (BLK) and ground. Is the repair complete?	–	System OK	–
13	1. Make sure that the door lock relay connector is connected. 2. Touch a grounded jumper wire to terminal A (LT BLU) of the disconnected door lock switch connector. 3. Remove the grounded jumper wire and touch it to terminal C (LT BLU/WHT) of the disconnected door lock switch connector. Do the doors lock and unlock when terminals C and A are alternately grounded?	–	Go to *Step 14*	Go to *Step 15*
14	1. Make sure all the lock rods are connected to the driver's door lock. 2. If no disconnected lock rods are located, replace the driver's door lock with the integral door lock switch. (Do not confuse the door lock with the lock cylinder. The door lock has three connectors: the lock switch, the lock solenoid, and the door contact switch. Use the schematic to verify the correct connector.) Is the repair complete?	–	System OK	–
15	Use an ohmmeter to check the continuity between terminal A (LT BLU) of the disconnected door lock switch connector and terminal 6 (LT BLU) of the door lock relay connector. Does the ohmmeter indicate the specified value?	≈ 0 Ω	Go to *Step 17*	Go to *Step 16*
16	Repair the open LT BLU wire. Is the repair complete?	–	System OK	–
17	Use an ohmmeter to check the continuity between terminal C (LT BLU/WHT) of the disconnected door lock switch connector and terminal 4 (LT BLU/WHT) of the door lock relay connector. Does the ohmmeter indicate the specified value?	≈ 0 Ω	Go to *Step 19*	Go to *Step 18*
18	Repair the open LT BLU/WHT wire. Is the repair complete?	–	System OK	–
19	Replace the door lock relay. Is the repair complete?	–	System OK	–

POWER WINDOWS

Power Windows Do Not Operate

Step	Action	Value	Yes	No
1	1. Make sure the window lock switch on the driver's door is not engaged. 2. Test each of the power windows. Does any power window operate?	–	Go to *Step 7*	Go to *Step 2*
2	1. At the driver's door, remove the power window/power mirror switch retaining screw. 2. Lift up the power window switch so that the connector is exposed. 3. Turn the ignition ON. 4. Check the voltage at terminal 10 (ORN) of the power window switch. Is the voltage equal to the specified value?	11-14 V	Go to *Step 4*	Go to *Step 3*
3	Repair the open power supply circuit to the driver's door power window switch. Is the repair complete?	–	System OK	–
4	Use an ohmmeter to check continuity between ground and terminal 4 (BLK) of the driver's door power window switch connector. Does the ohmmeter indicate the specified value?	≈ 0 Ω	Go to *Step 6*	Go to *Step 5*
5	Repair the open circuit between ground and terminal 4 (BLK) of the driver's door power window switch. Is the repair complete?	–	System OK	–
6	Replace the driver's door power window switch. Is the repair complete?	–	System OK	–
7	1. At the door with the inoperative power window, remove the door trim panel 2. Connect a fused jumper wire to the positive battery terminal. 3. Connect another jumper wire to the negative battery terminal. 4. Disconnect the two-wire connector that connects the window motor to the door harness. 5. Connect the negative jumper wire to one of the terminals of the two-wire connector. 6. Touch the positive jumper wire to the other terminal of the two-wire connector. 7. Reverse the jumper wire connections. Does the window move up when the motor is powered directly by the battery, and down when the jumper connections are reversed?	–	Go to *Step 9*	Go to *Step 8*
8	Replace the window motor. Is the repair complete?	–	System OK	–
9	Check the operation of the windows. Is the driver's window the one that is inoperative?	–	Go to *Step 10*	Go to *Step 11*
10	Replace the driver's door power window switch. Is the repair complete?	–	System OK	–

Power Windows Do Not Operate (Cont'd)

Step	Action	Value	Yes	No
11	1. Make sure the window lock switch on the driver's door is not engaged. 2. Turn the ignition ON. 3. Backprobe to check the voltage at terminal 5 (PNK) of the driver's door power window switch. Is the voltage equal to the specified value?	11-14 V	Go to *Step 12*	Go to *Step 10*
12	1. Make sure the window lock switch on the driver's door is not engaged. 2. Turn the ignition ON. 3. Check the voltage at terminal 5 (PNK) of the window switch connector for the inoperative window. Is the voltage equal to the specified value?	11-14 V	Go to *Step 14*	Go to *Step 13*
13	Repair the open (PNK) wire between the window switch and the driver's door power window switch. Is the repair complete?	–	System OK	–
14	1. At the inoperative window switch, use an ohmmeter to check continuity between ground and terminal 1. 2. At the inoperative window switch, use an ohmmeter to check continuity between ground and terminal 4. When performing both ohmmeter tests, does the ohmmeter indicate the specified value?	≈ 0 Ω	Go to *Step 15*	Go to *Step 16*
15	Replace the power window switch. Is the repair complete?	–	System OK	–
16	If one of the window switch wires tested in Step 15 does not show continuity with ground, use an ohmmeter to test the continuity of that wire between the window switch and the driver's door power window switch. Does the ohmmeter indicate the specified value?	≈ 0 Ω	Go to *Step 17*	Go to *Step 18*
17	Replace the window switch for the inoperative window. Is the repair complete?	–	System OK	–
18	Repair the open circuit between the window switch and the driver's door power window switch. Is the repair complete?	–	System OK	–

MAINTENANCE AND REPAIR

ON-VEHICLE SERVICE

OUTSIDE CHANNEL MOLDING

(Left–Hand Drive Shown, Right–Hand Drive Similar)

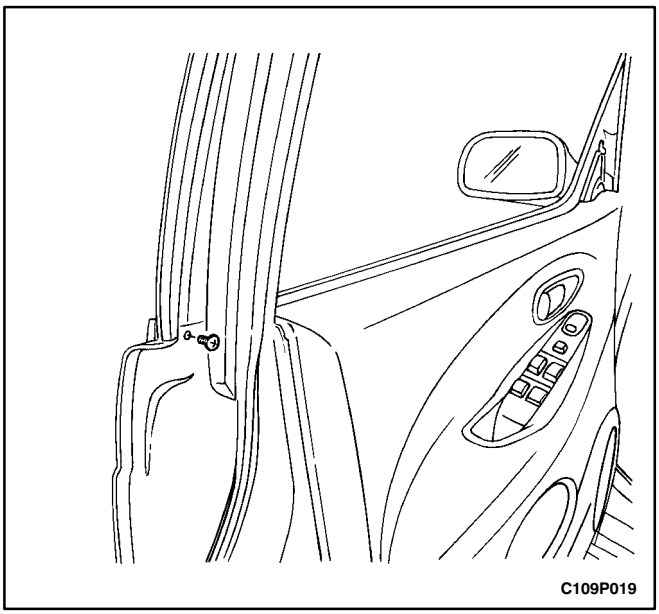

Removal Procedure

1. Lower the window completely.
2. Remove the outside channel molding screw. (Front door shown, rear door similar.)
3. Remove the outside rearview mirror. Refer to *Section 9L, Glass and Mirrors.*
4. Lift the outside channel molding off the door.

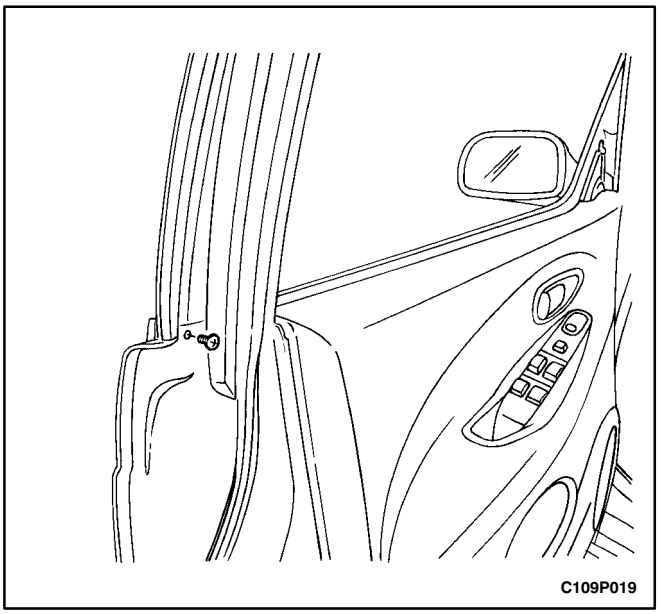

Installation Procedure

1. Press the outside channel molding onto the door.

Notice: Dissimilar metals in direct contact with each other may corrode rapidly. Make sure to use the correct fasteners to prevent premature corrosion.

2. Install the outside channel molding screw. (Front door shown, rear door similar.)

   Tighten

   Tighten the outside channel molding screw to 4 N•m (35 lb-in).
3. Install the outside rearview mirror. Refer to *Section 9L, Glass and Mirrors*.
4. Raise the window.

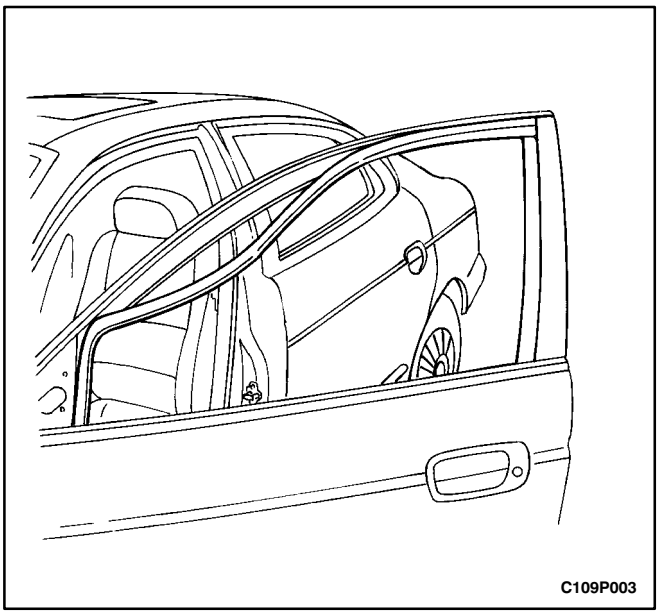

FRONT DOOR GLASS RUN

Removal Procedure

1. Remove the outside rearview mirror. Refer to *Section 9L, Glass and Mirrors*.
2. Remove the front door glass. Refer to *Section 9L, Glass and Mirrors*.
3. Remove the glass run.

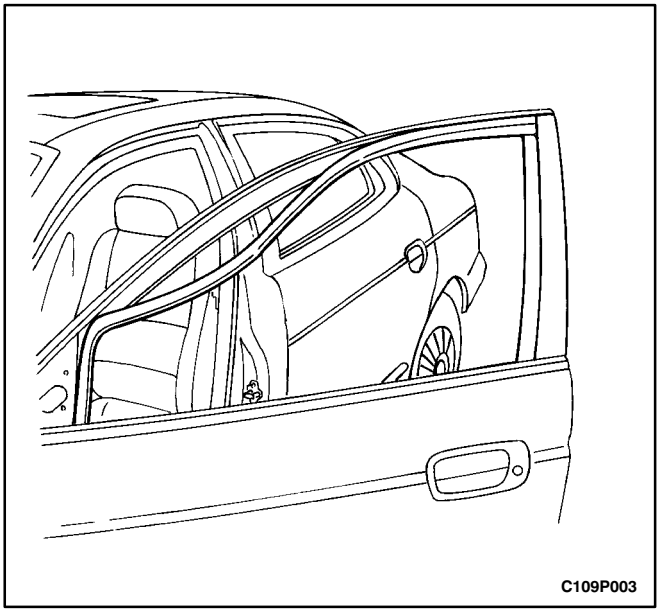

Installation Procedure

1. Install the glass run.
2. Install the front door glass. Refer to *Section 9L, Glass and Mirrors*.
3. Install the outside rearview mirror. Refer to *Section 9L, Glass and Mirrors*.

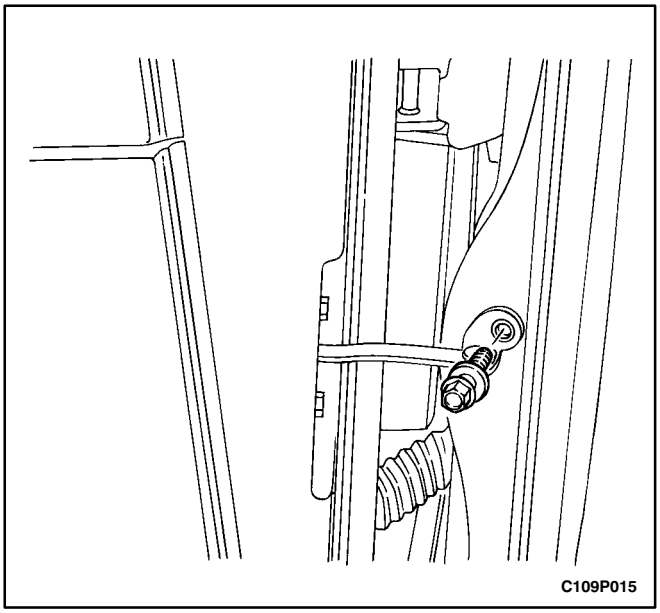

DOOR WEATHERSTRIP

(Left–Hand Drive Shown, Right–Hand Drive Similar)

Removal Procedure

1. Remove the door hold-open link-to-body bolt and the door hold-open link. (Front door shown, rear door similar.)

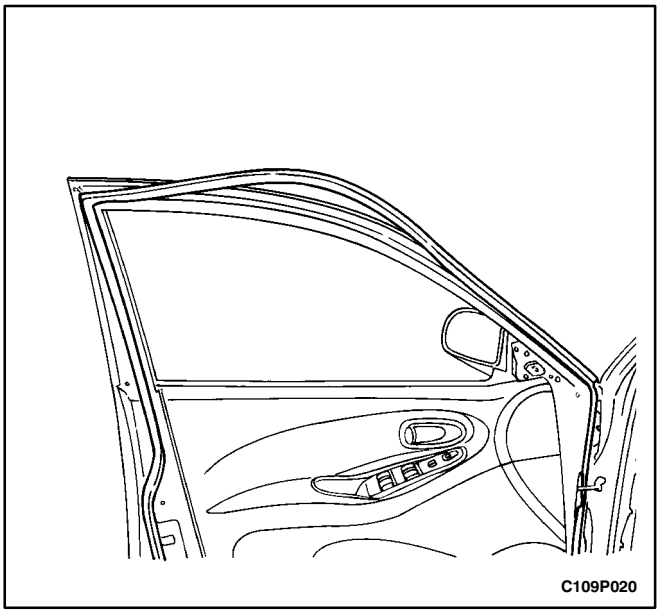

2. Remove the door weatherstrip. (Front door shown, rear door similar.)

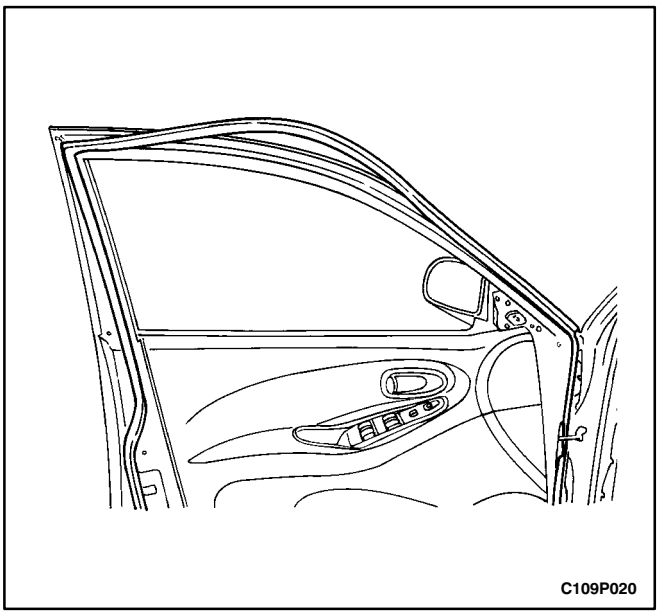

Installation Procedure

1. Install the door weatherstrip. (Front door shown, rear door similar.)

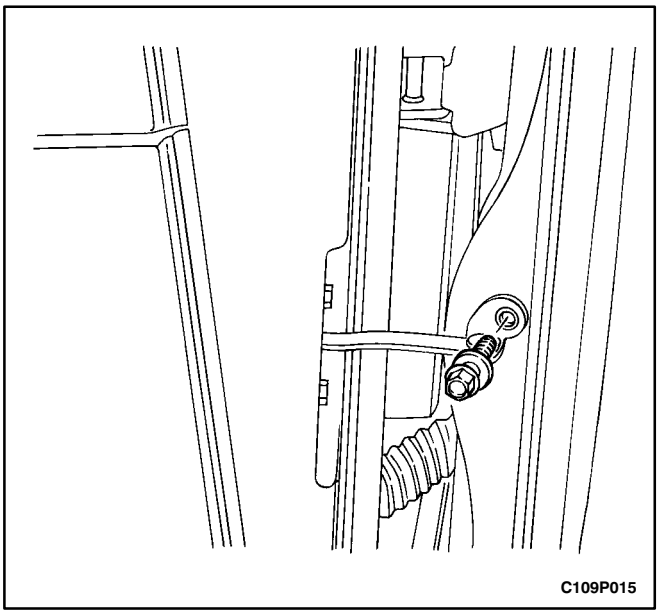

Notice: Dissimilar metals in direct contact with each other may corrode rapidly. Make sure to use the correct fasteners to prevent premature corrosion.

2. Install the door hold-open link to the body with the bolt. (Front door shown, rear door similar.)

Tighten

Tighten the door hold-open link-to-body bolt to 25 N•m (18 lb-ft).

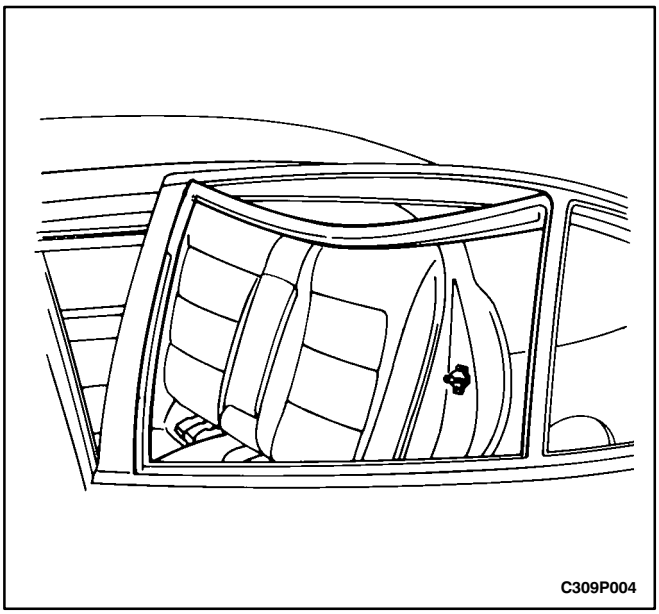

REAR DOOR GLASS RUN

Removal Procedure

1. Remove the rear door glass. Refer to *Section 9L, Glass and Mirrors*.
2. Remove the rear door glass run.

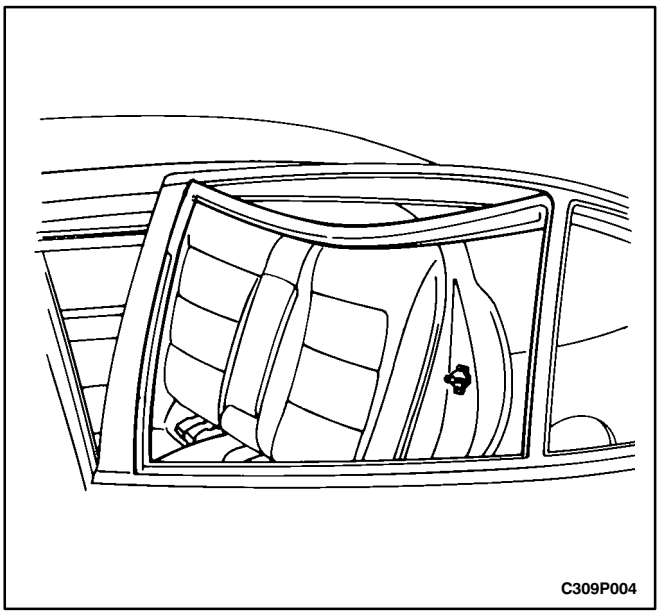

Installation Procedure

1. Install the rear door glass run.
2. Install the rear door glass. Refer to *Section 9L, Glass and Mirrors*.

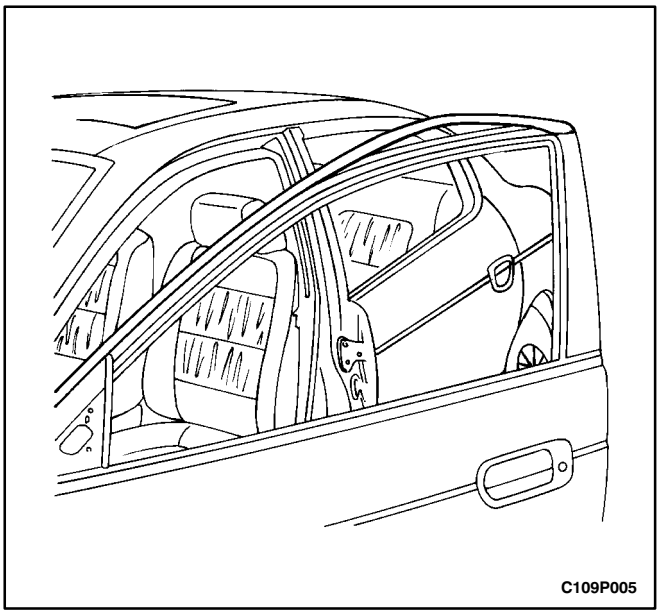

FRONT DOOR SECONDARY WEATHERSTRIP

Removal Procedure

1. Remove the outside rearview mirror. Refer to *Section 9L, Glass and Mirrors*.
2. Remove the front door secondary weatherstrip.

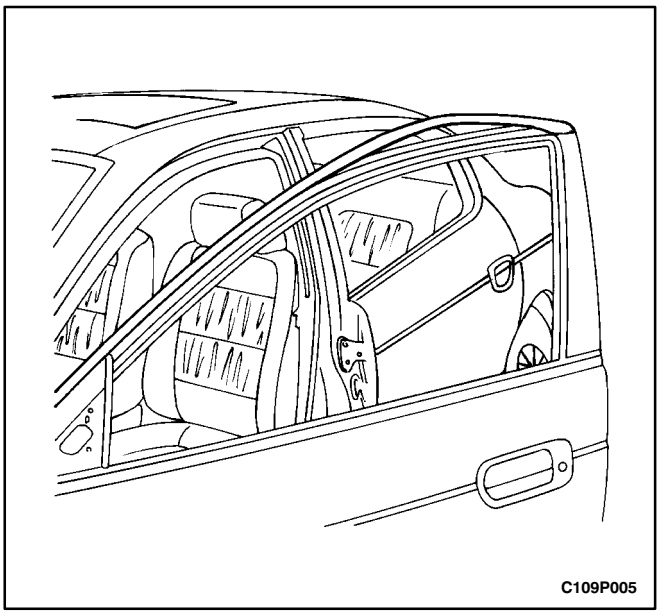

Installation Procedure

1. Install the front door secondary weatherstrip.
2. Install the outside rearview mirror. Refer to *Section 9L, Glass and Mirrors*.

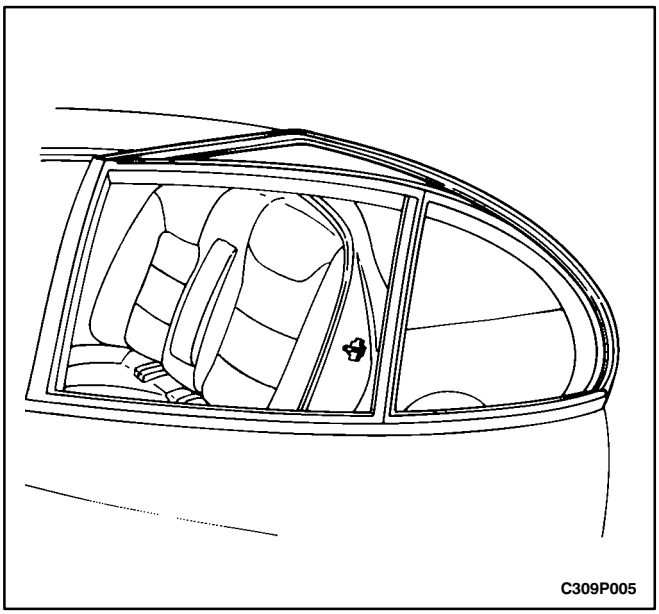

REAR DOOR SECONDARY WEATHERSTRIP

Removal Procedure

1. Remove the rear door secondary weatherstrip.

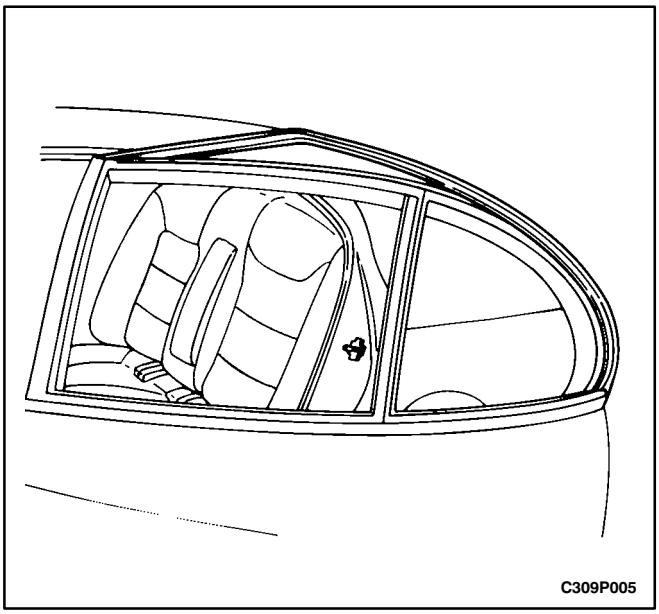

Installation Procedure

1. Install the rear door secondary weatherstrip.

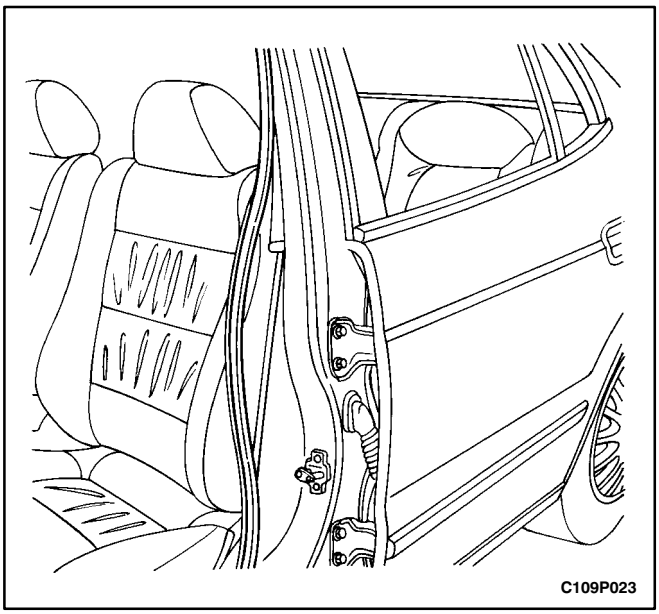

FRONT DOOR OPENING WEATHERSTRIP

Removal Procedure

1. Remove the kick panel, the front rocker panel, and the lower B-pillar trim panel. Refer to *Section 9G, Interior Trim.*
2. Remove the front door opening weatherstrip.

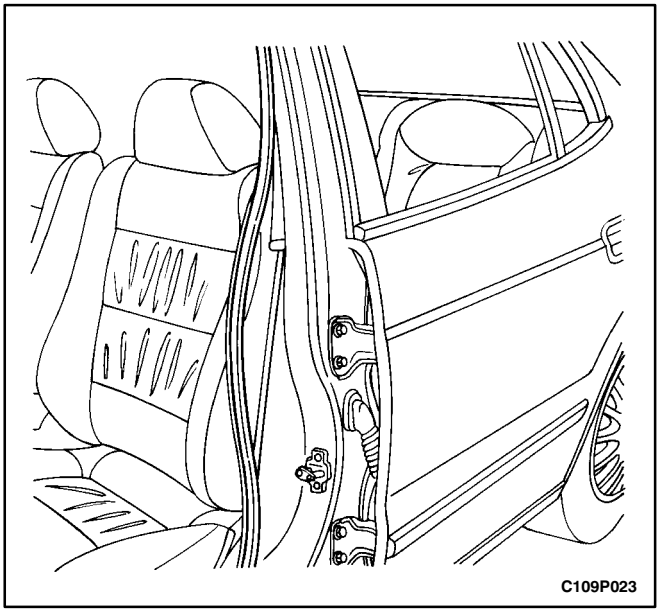

Installation Procedure

1. Install the front door opening weatherstrip.
2. Install the kick panel, the front rocker panel, and the lower B-pillar trim panel. Refer to *Section 9G, Interior Trim.*

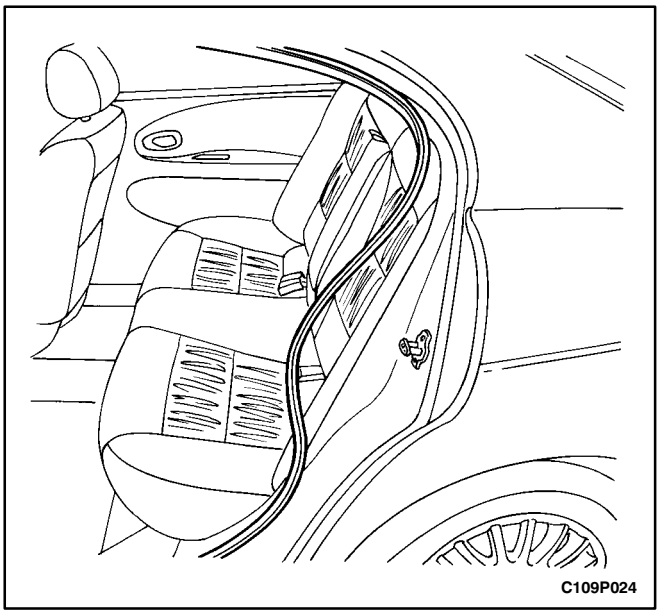

REAR DOOR OPENING WEATHERSTRIP

Removal Procedure

1. Remove the rear rocker panel and the lower B-pillar trim panel. Refer to *Section 9G, Interior Trim.*
2. Remove the rear door opening weatherstrip.

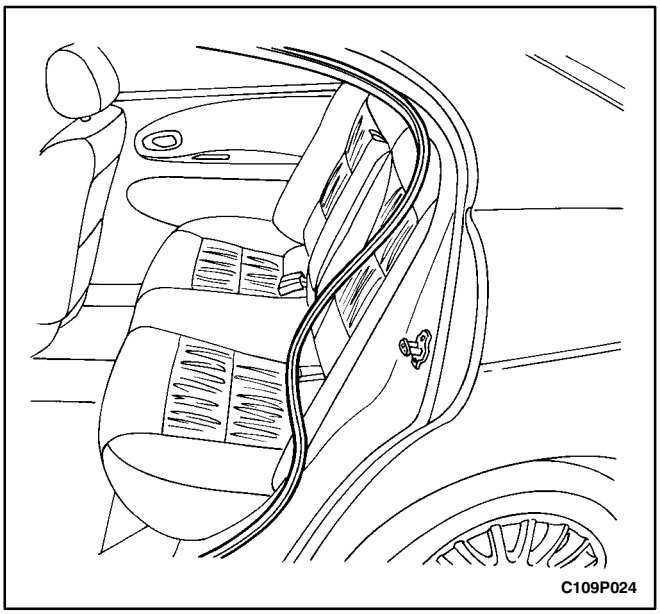

Installation Procedure

1. Install the rear door opening weatherstrip.
2. Install the rear rocker panel and the lower B-pillar trim panel. Refer to *Section 9G, Interior Trim.*

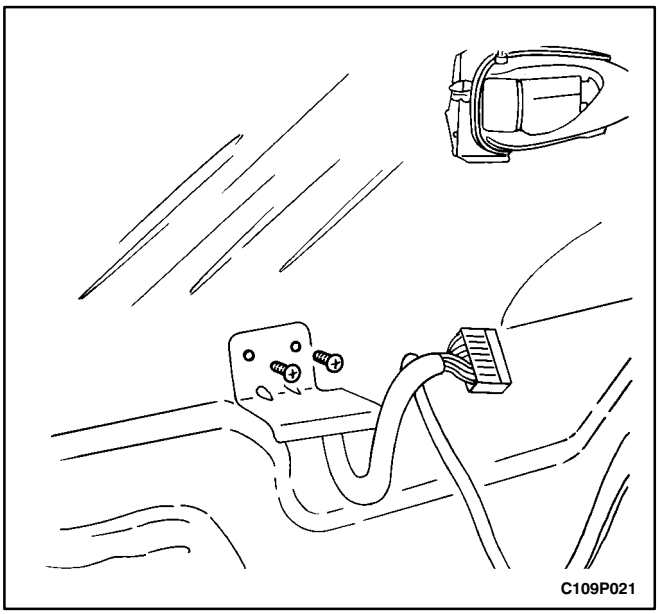

DOOR SEAL TRIM

Removal Procedure

1. Remove the door trim panel. Refer to *Section 9G, Interior Trim*.
2. Remove the screws and the door pull bracket. (Front door shown, rear door similar.)

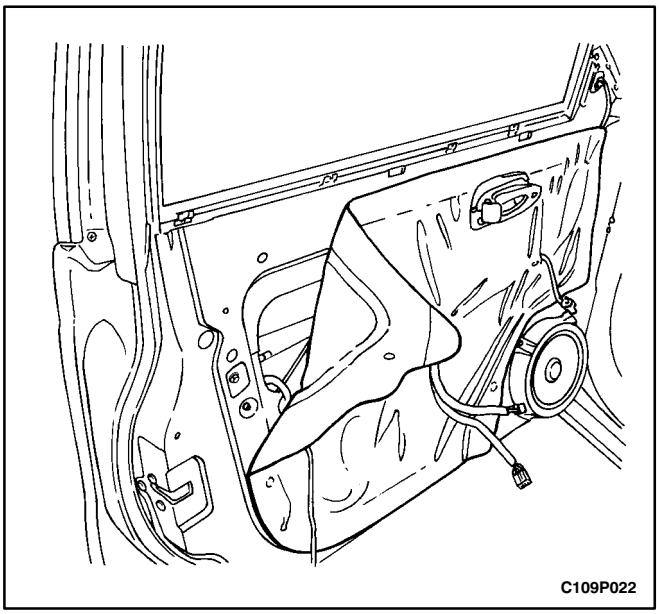

3. Remove the door seal trim. (Front door shown, rear door similar.)

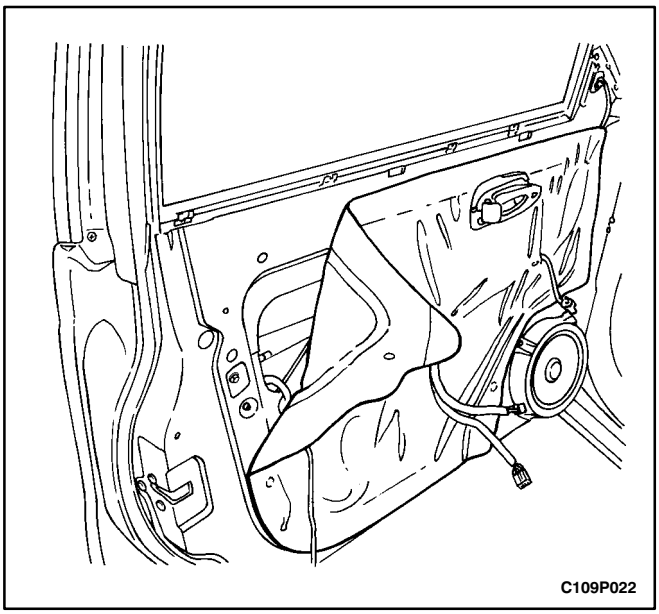

Installation Procedure

1. Install the door seal trim. (Front door shown, rear door similar.)

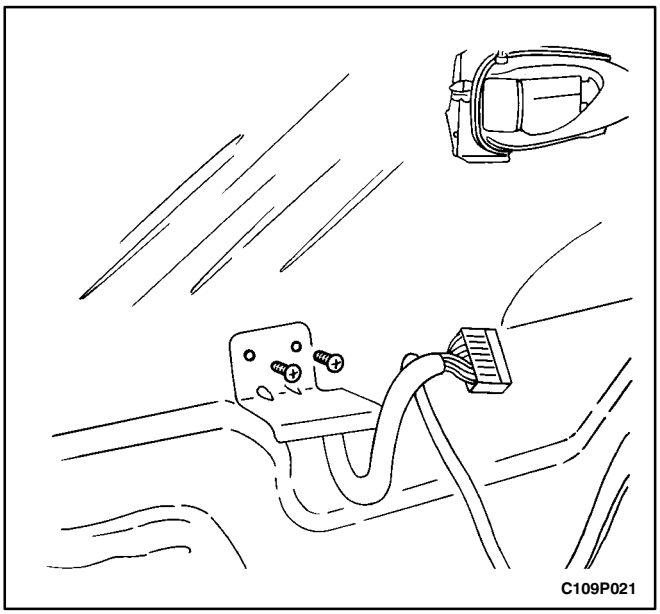

Notice: Dissimilar metals in direct contact with each other may corrode rapidly. Make sure to use the correct fasteners to prevent premature corrosion.

2. Install the door pull bracket with the screws. (Front door shown, rear door similar.)

Tighten

Tighten the door pull bracket screws to 3 N•m (27 lb-in).

3. Install the door trim panel. Refer to *Section 9G, Interior Trim*.

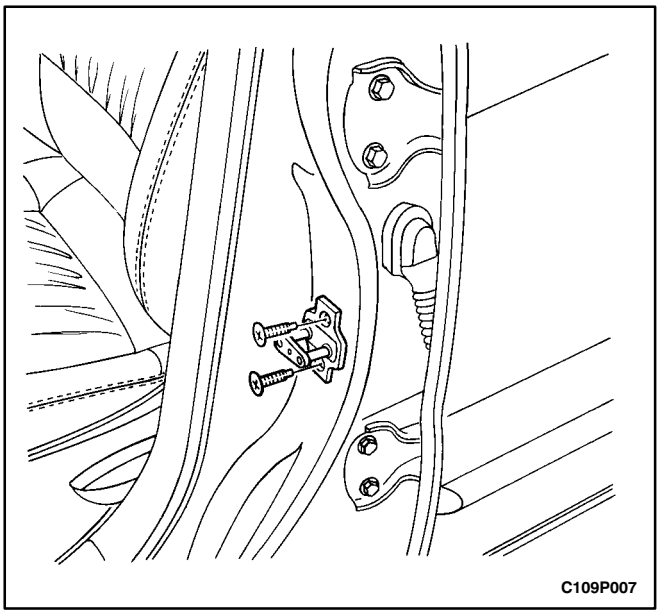

DOOR LOCK STRIKER

Removal Procedure

1. Remove the screws and the door lock striker. (Front door shown, rear door similar.)

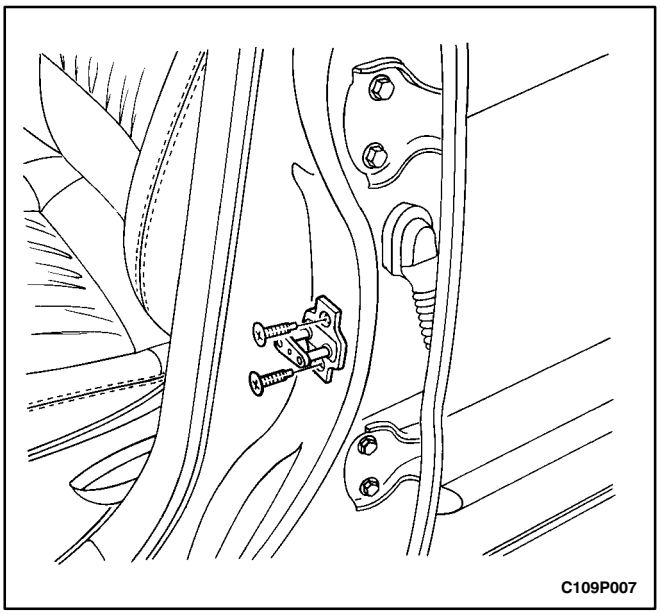

Installation Procedure

Notice: Dissimilar metals in direct contact with each other may corrode rapidly. Make sure to use the correct fasteners to prevent premature corrosion.

1. Install the screws and the door lock striker. (Front door shown, rear door similar.)

Tighten

Tighten the door lock striker screws to 20 N•m (15 lb-ft).

DOOR LOCK STRIKER ADJUSTMENT

The door lock striker consists of a striker with two screws that are threaded into a tapped, floating cage plate located in the appropriate body pillar. This floating cage plate allows the striker to be easily adjusted in and out or up and down.

The door is secured in the closed position when the door lock fork snaps over and engages the striker.

Notice: The door lock striker is an important attaching part that can affect the performance of vital components and systems. It can cause major repair expenses. If replacement becomes necessary, the door lock striker must be replaced by one with the same part number or with an equivalent. Do not use a replacement part of lesser quality or of a substitute design. The specified torque values must be used during reassembly in order to ensure the proper retention of the part.

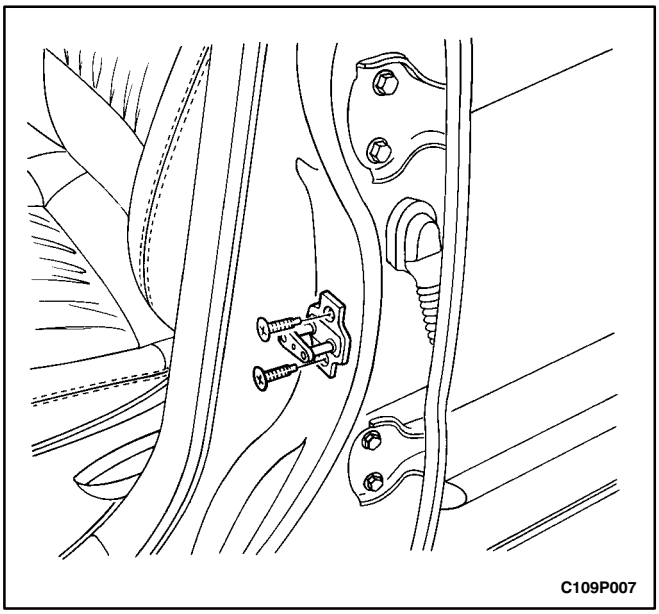

Up/Down or In/Out Adjustment

An adjustment of the striker in the up and down or in and out directions may be necessary for a number of reasons:

- Vehicle frame damage as the result of a collision.
- Installation of new door weatherstripping.
- Customer complaints of excessive windnoise.
- Difficulty in opening or closing the door.

In order to adjust the door striker in an up and down or in and out direction, perform the following procedure:

1. The door must be properly aligned.
2. Loosen the striker screws. (Front door shown, rear door similar.)
3. The floating cage plate can be moved slightly using the ends of the striker screws. Move the floating cage plate to the desired position.

Notice: It is important to use a flat-end rotary file in order not to damage the tapped floating cage plate. The striker screws and the tapped floating cage plate are important attaching parts that could affect the performance of vital components and systems.

4. If proper adjustment requires that the floating cage plate be moved more than is possible, use an electric hand drill and a 3/8-inch rotary file with a flat head in order to enlarge the body opening in the direction required.
5. Tighten the striker screws to the correct position.

Tighten

Tighten the door lock striker screws to 20 N•m (15 lb-ft).

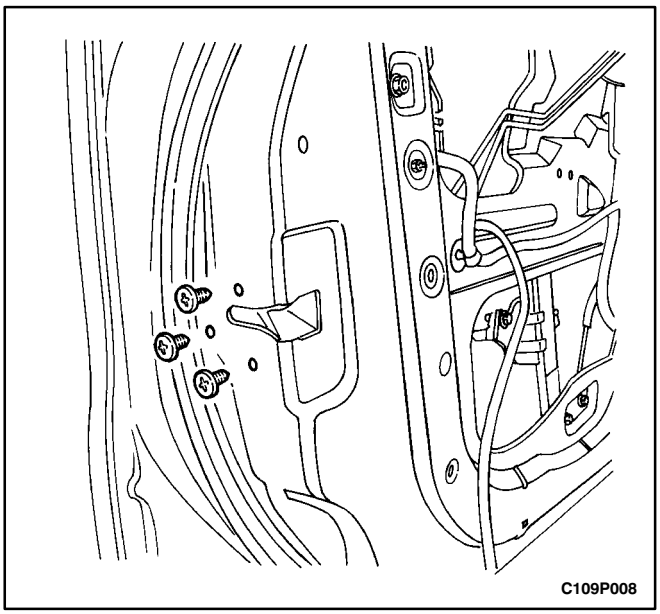

FRONT DOOR LOCK

Removal Procedure

1. Disconnect the negative battery cable.
2. Remove the seal trim. Refer to “Door Seal Trim” in this section.
3. Remove the screws and the front door lock.
4. Disconnect the lock rods.
5. Disconnect the electrical connector.

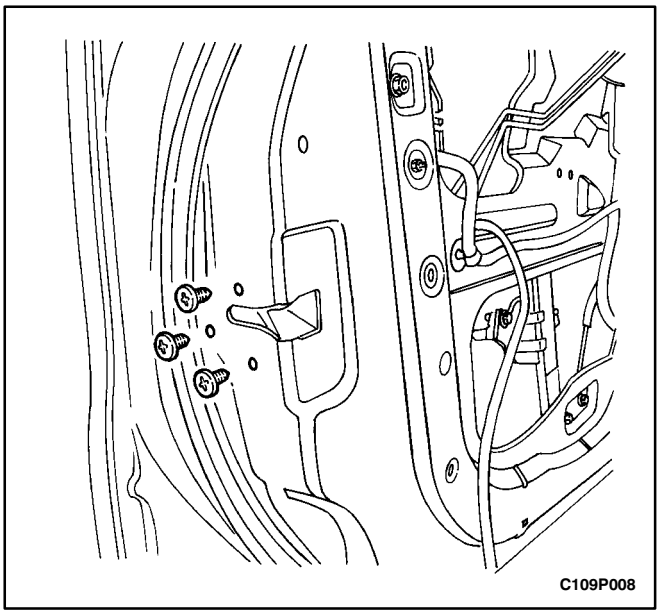

Installation Procedure

1. Connect the electrical connector.
2. Connect the lock rods.

Notice: Dissimilar metals in direct contact with each other may corrode rapidly. Make sure to use the correct fasteners to prevent premature corrosion.

3. Install the front door lock with the screws.

Tighten

Tighten the front door lock screws to 8 N•m (71 lb-in).

4. Install the seal trim. Refer to “Door Seal Trim” in this section.
5. Connect the negative battery cable.

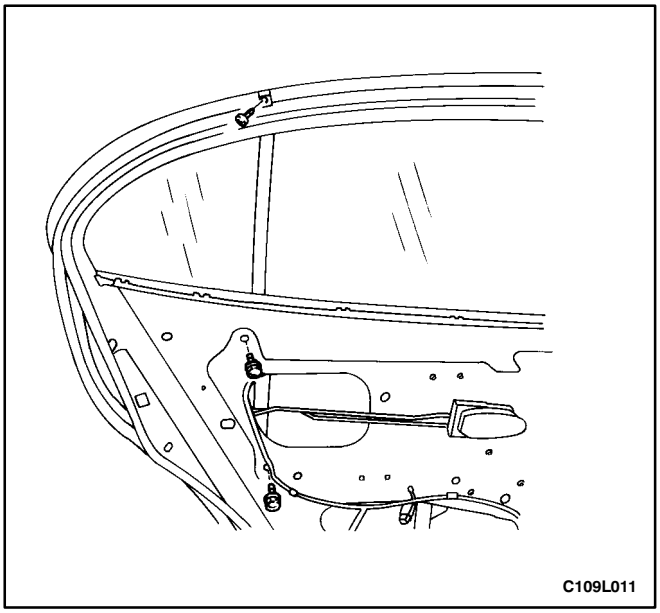

CHILDPROOF REAR DOOR LOCK

Removal Procedure

1. Disconnect the negative battery cable.
2. Remove the door seal trim. Refer to “Door Seal Trim” in this section.
3. Remove the screw and the guide rail.

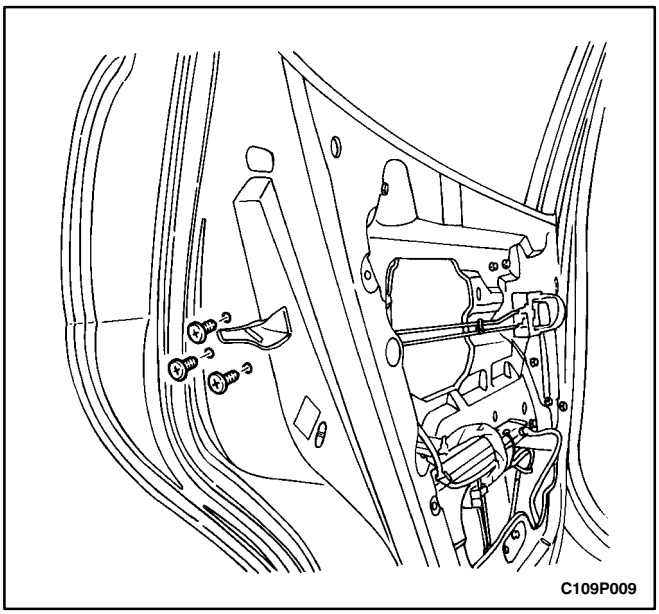

4. Remove the door lock screws.
5. Disconnect the lock rods.
6. Remove the door lock.
7. Disconnect the electrical connector.

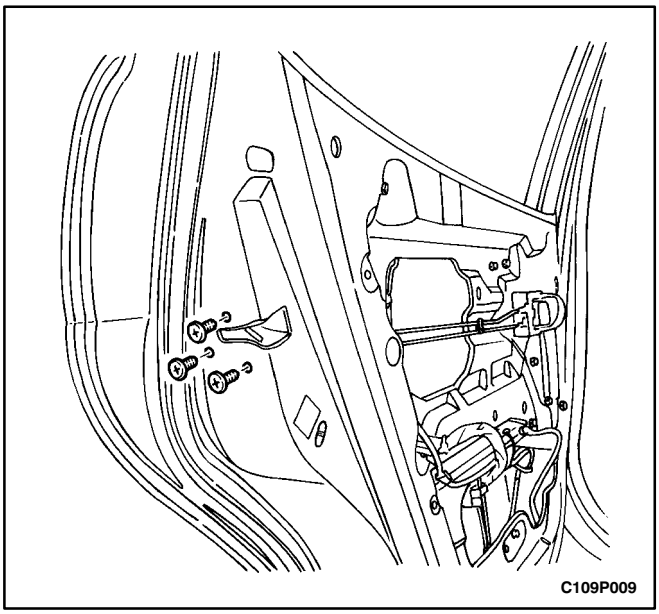

Installation Procedure

1. Connect the electrical connector.

Notice: Dissimilar metals in direct contact with each other may corrode rapidly. Make sure to use the correct fasteners to prevent premature corrosion.

2. Install the rear door lock with the screws.

Tighten

Tighten the rear door lock screws to 8 N•m (71 lb-in).

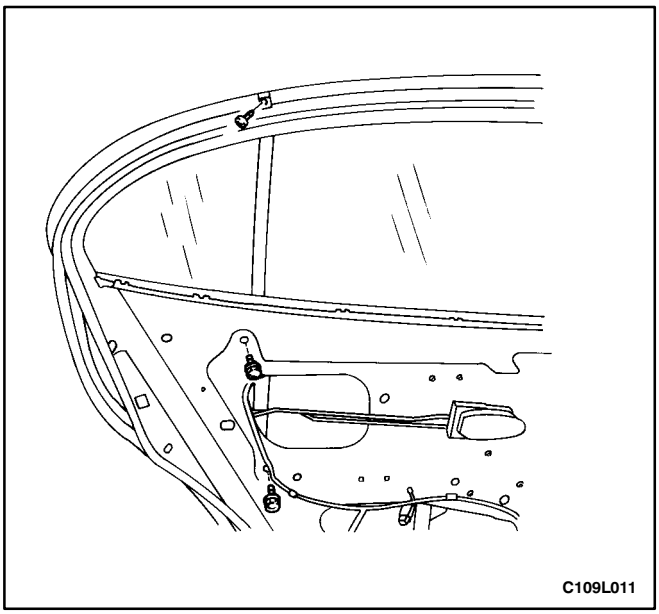

3. Install the lock rods.
4. Install the guide rail with the bolts and the screw.

Tighten

Tighten the rear door guide rail screw to 4 N•m (35 lb-in).

Tighten the rear door guide rail bolts to 7 N•m (62 lb-in).

5. Install the door seal trim. Refer to “Door Seal Trim” in this section.
6. Connect the negative battery cable.

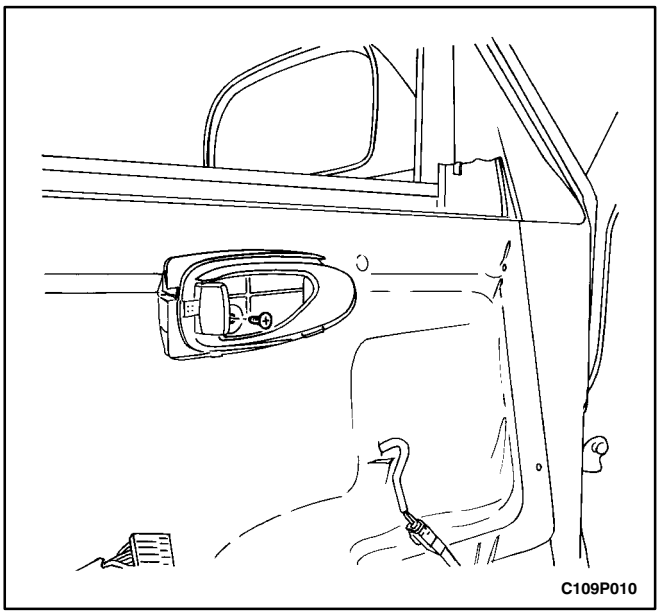

INSIDE DOOR HANDLE

Removal Procedure

1. Remove the door trim. Refer to *Section 9G, Interior Trim*.
2. Remove the screw that secures the door handle to the door.
3. Slide the door handle rearward and remove it from the door. (Front door shown, rear door similar.)
4. Disconnect the inside door handle and the lock rods.

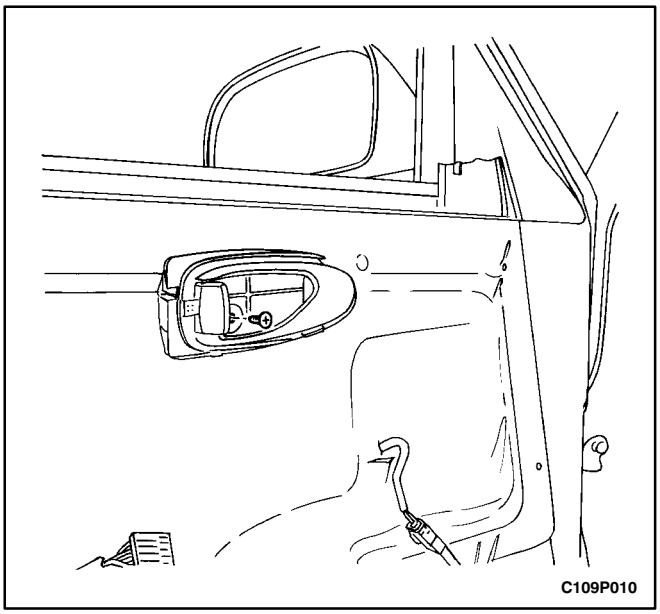

Installation Procedure

1. Connect the inside door handle and the lock rods.
2. Insert the inside door handle into the slots in the door. (Front door shown, rear door similar.)
3. Slide the door handle forward.

Notice: Dissimilar metals in direct contact with each other may corrode rapidly. Make sure to use the correct fasteners to prevent premature corrosion.

4. Install the inside door handle screw.

   ### Tighten

   Tighten the inside door handle screw to 3 N•m (27 lb-in).

5. Install the door seal trim. Refer to *Section 9G, Interior Trim*.

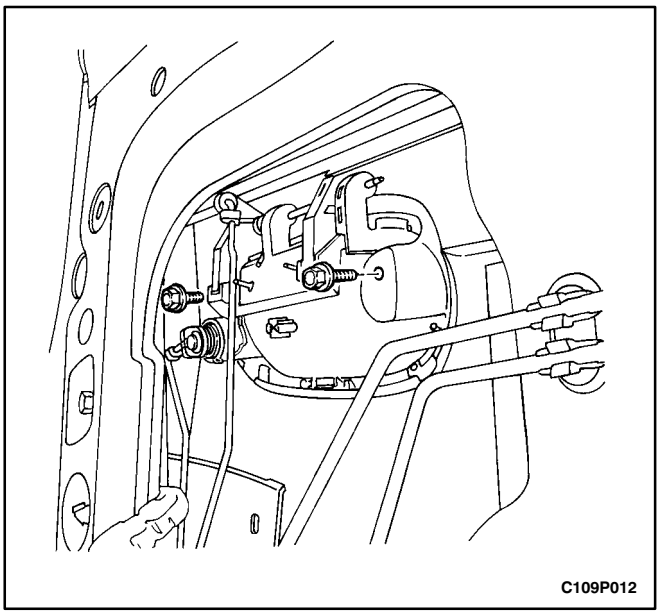

OUTSIDE DOOR HANDLE

Removal Procedure

1. Remove the door seal trim. Refer to “Door Seal Trim” in this section.
2. Disconnect the outside door handle and the lock rods.
3. Remove the bolts and the door handle. (Front door shown, rear door similar.)

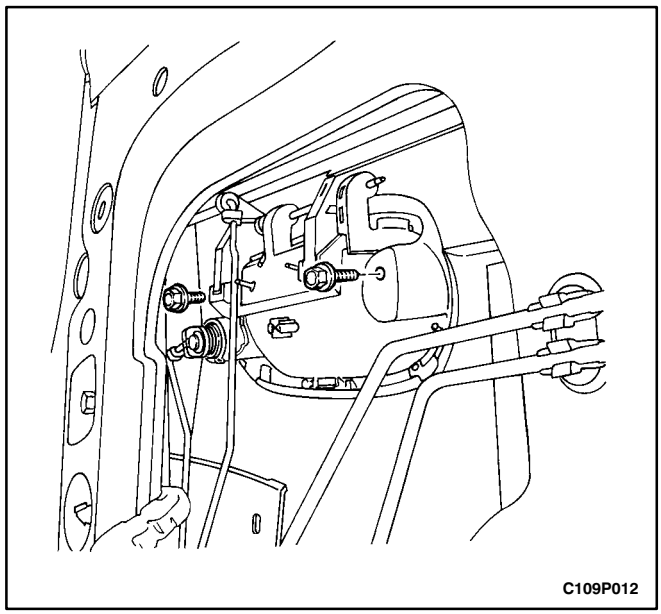

Installation Procedure

1. Connect the outside door handle and the lock rods. (Front door shown, rear door similar.)

Notice: Dissimilar metals in direct contact with each other may corrode rapidly. Make sure to use the correct fasteners to prevent premature corrosion.

2. Install the door handle with the bolts.

Tighten

Tighten the outside door handle bolts to 4.5 N•m (40 lb-in).

3. Install the door seal trim. Refer to “Door Seal Trim” in this section.

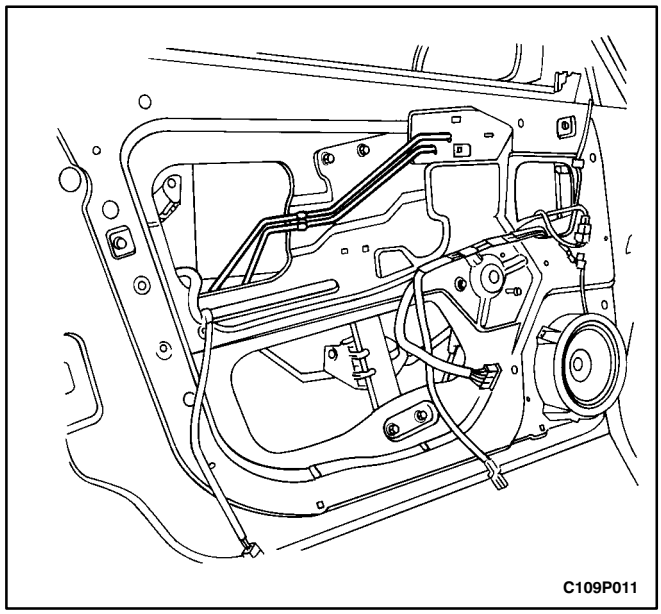

INSIDE LOCK ROD

Removal Procedure

1. Remove the door seal trim. Refer to “Door Seal Trim” in this section.
2. Remove the inside door handle. Refer to “Inside Door Handle” in this section.
3. Disconnect the inside lock rods from the lock. (Front door shown, rear door similar.)

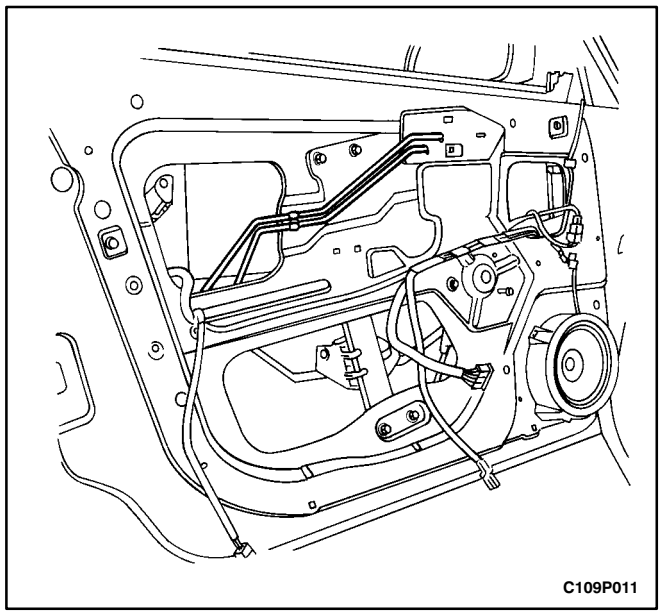

Installation Procedure

1. Connect the inside lock rods to the lock. (Front door shown, rear door similar.)
2. Install the inside door handle. Refer to “Inside Door Handle” in this section.
3. Install the door seal trim. Refer to “Door Inside Trim” in this section.

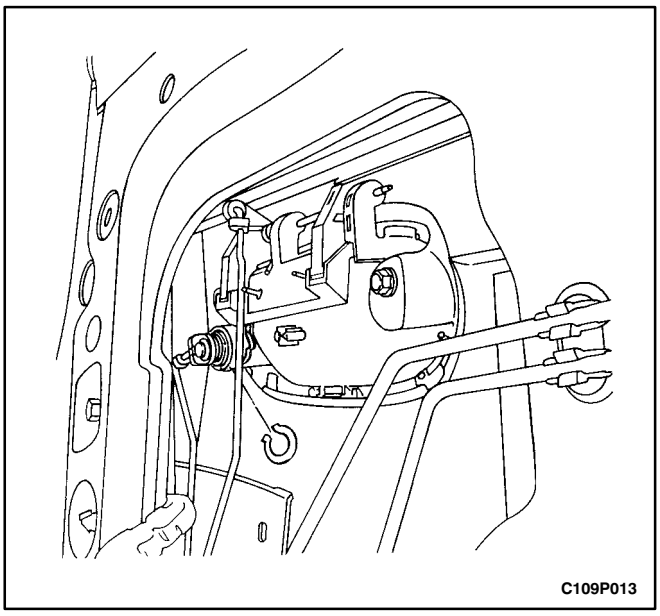

DOOR LOCK CYLINDER

Removal Procedure

1. Remove the door seal trim. Refer to “Door Seal Trim” in this section.
2. Disconnect the outside door handle lock rod.
3. Remove the retaining clip and the lock cylinder. (Front door shown, rear door similar.)

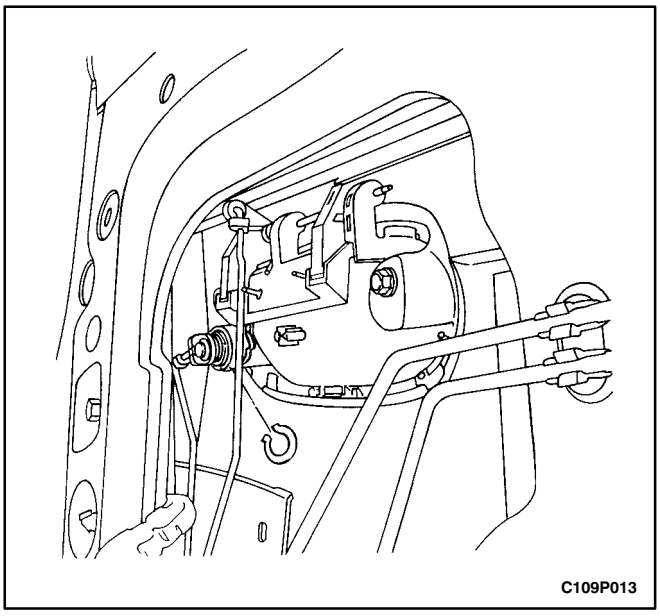

Installation Procedure

1. Install the lock cylinder with the retaining clip. (Front door shown, rear door similar.)
2. Connect the outside door handle lock rod.
3. Install the door seal trim. Refer to “Door Seal Trim” in this section.

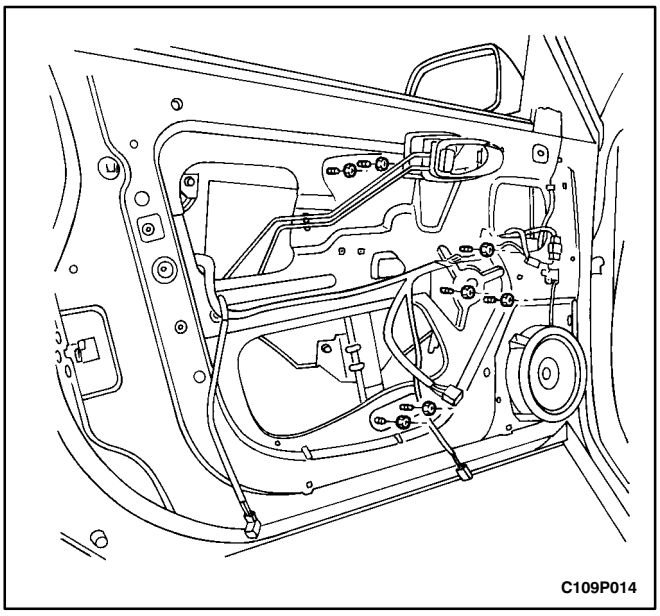

POWER WINDOW REGULATOR

Removal Procedure

1. Disconnect the negative battery cable.
2. Remove the door glass. Refer to *Section 9L, Glass and Mirrors.*
3. Disconnect the electrical connector.
4. Remove the nuts and the window regulator. (Front door shown, rear door similar.)

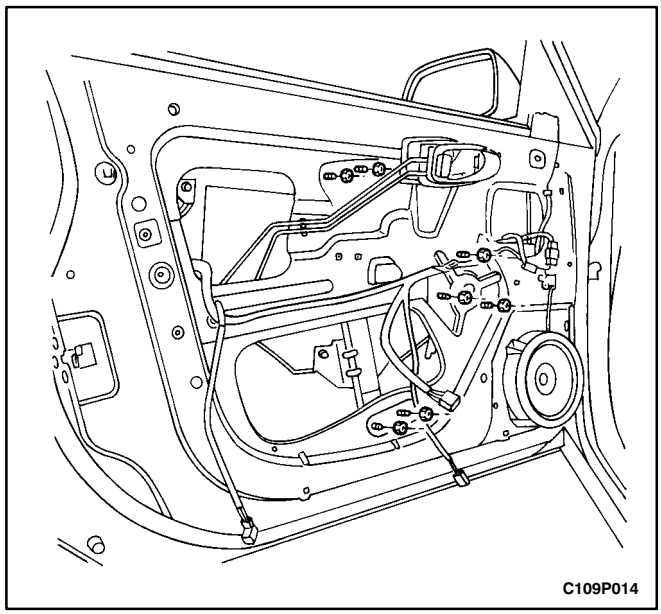

Installation Procedure

Notice: Dissimilar metals in direct contact with each other may corrode rapidly. Make sure to use the correct fasteners to prevent premature corrosion.

1. Install the window regulator with the nuts. (Front door shown, rear door similar.)

   Tighten

   Tighten the window regulator nuts to 7 N•m (62 lb-in).
2. Connect the electrical connector.
3. Install the door glass. Refer to *Section 9L, Glass and Mirrors*.
4. Connect the negative battery cable.

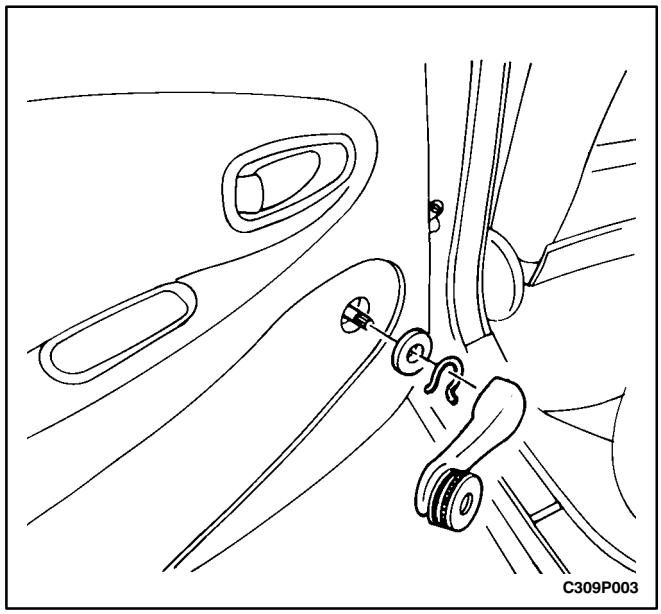

MANUAL REAR WINDOW REGULATOR HANDLE

Removal Procedure

1. Push the plastic ring behind the window regulator handle toward the door to reveal the metal clip.
2. Pry off the metal clip.
3. Remove the window regulator handle and the plastic ring.

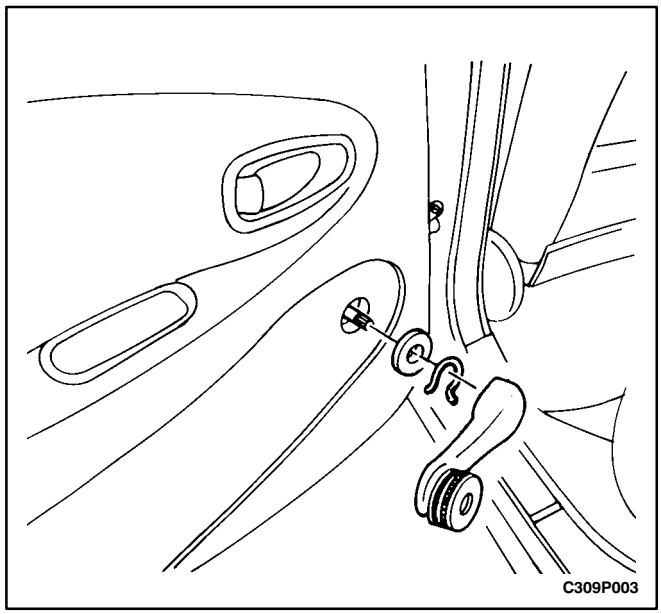

Installation Procedure

1. Install the plastic ring.
2. Install the window regulator handle.
3. Insert the metal clip.

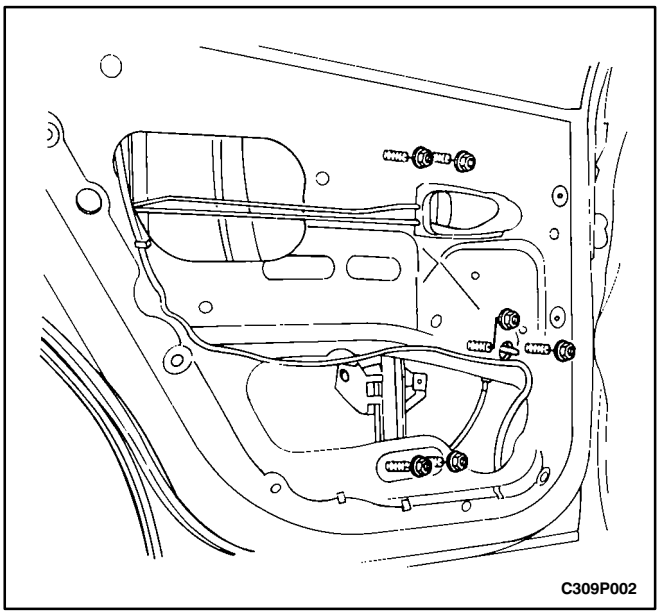

MANUAL REAR WINDOW REGULATOR

Removal Procedure

1. Remove the regulator handle. Refer to “Manual Rear Window Regulator Handle” in this section.
2. Remove the rear door glass. Refer to *Section 9L, Glass and Mirrors.*
3. Remove the nuts and the window regulator.

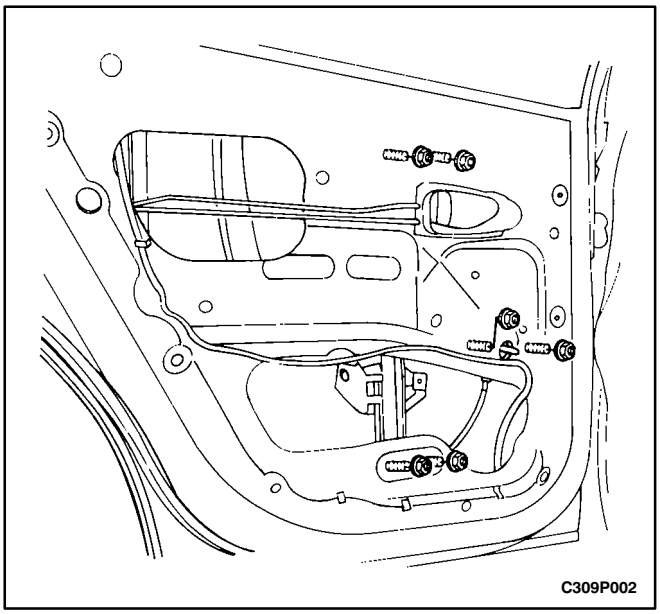

Installation Procedure

Notice: Dissimilar metals in direct contact with each other may corrode rapidly. Make sure to use the correct fasteners to prevent premature corrosion.

1. Install the window regulator with the nuts.

   Tighten

   Tighten the window regulator nuts to 7 N•m (62 lb-in).
2. Install the rear door glass. Refer to *Section 9L, Glass and Mirrors.*
3. Install the regulator handle. Refer to “Manual Rear Window Regulator Handle” in this section.

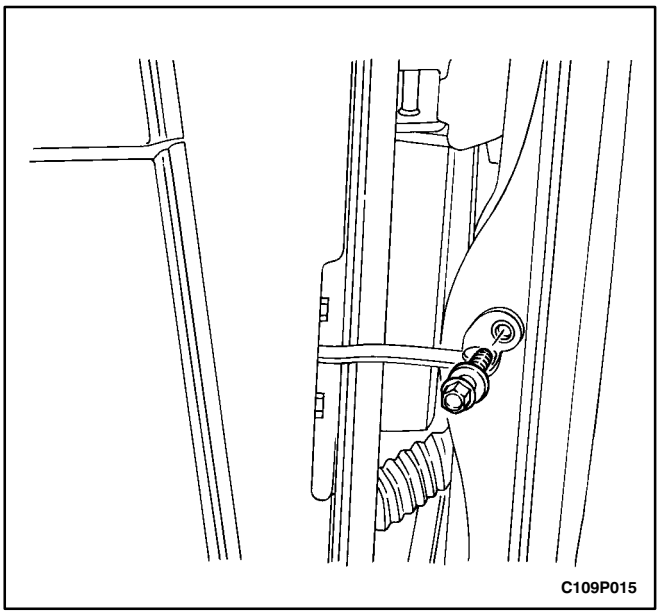

DOOR ASSEMBLY

Removal Procedure

1. Disconnect the negative battery cable.
2. Remove the bolt and the door hold-open link from the body.

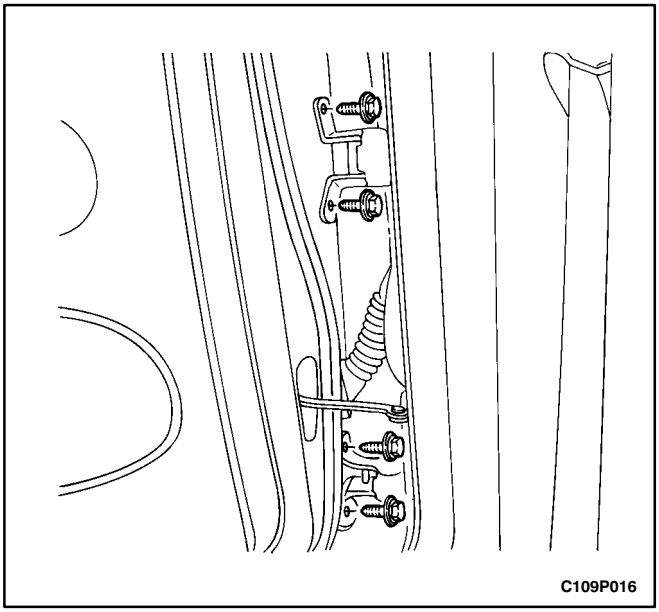

3. With the aid of another technician, remove the door hinge bolts and the front door. (Front door shown, rear door similar.)
4. Disconnect the body-to-door rubber grommet and the electrical connector.

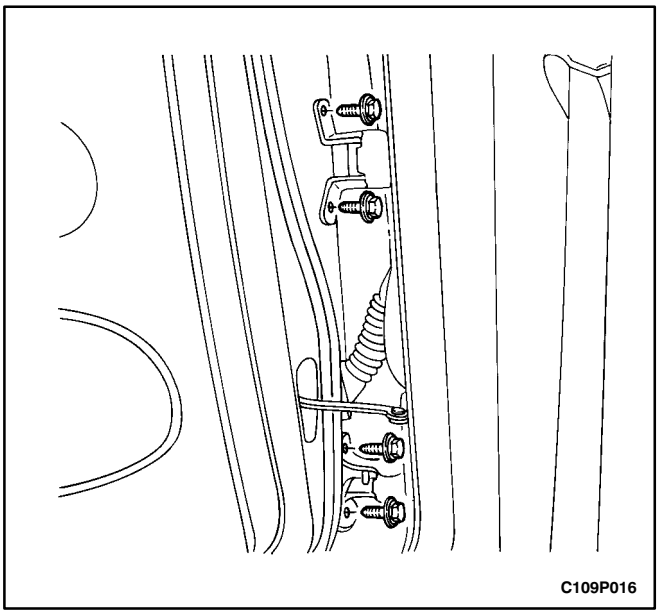

Installation Procedure

1. Connect the electrical connector and the body-to-door rubber grommet.

Notice: Dissimilar metals in direct contact with each other may corrode rapidly. Make sure to use the correct fasteners to prevent premature corrosion.

2. With the aid of another technician, lightly secure the front door with the door hinge bolts. (Front door shown, rear door similar.)
3. Adjust the door for proper fit.

Tighten

Tighten the door hinge-to-body bolts to 39 N•m (29 lb-ft).

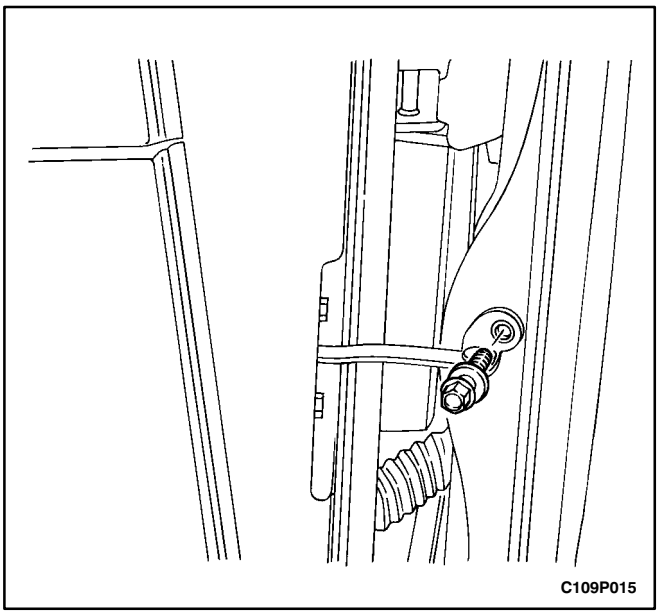

4. Install the door hold-open link to the body with the bolt.

Tighten

Tighten the door hold-open link-to-body bolt to 25 N•m (18 lb-ft).

5. Connect the negative battery cable.
6. Perform the waterleak test. Refer to *Section 9I, Waterleaks.*
7. Check for windnoise. Refer to *Section 9J, Windnoise.*

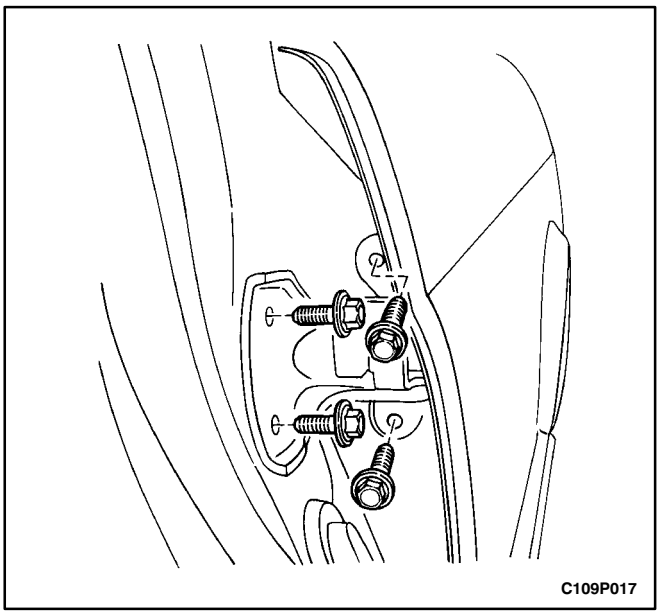

DOOR HINGE

Removal Procedure

1. With the aid of another technician, remove the bolts and the hinge from the door and the body. (Rear door shown, front door similar.)

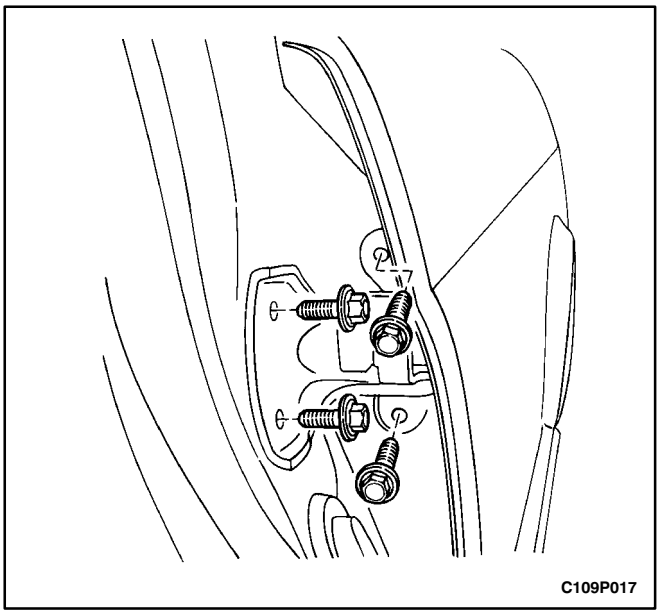

Installation Procedure

Notice: Dissimilar metals in direct contact with each other may corrode rapidly. Make sure to use the correct fasteners to prevent premature corrosion.

1. With the aid of another technician, install the hinge to the door and the body with the bolts. (Rear door shown, front door similar.)

Tighten

Tighten the door hinge-to-body bolts to 39 N•m (29 lb-ft).

Tighten the door hinge-to-door bolts to 20 N•m (15 lb-ft).

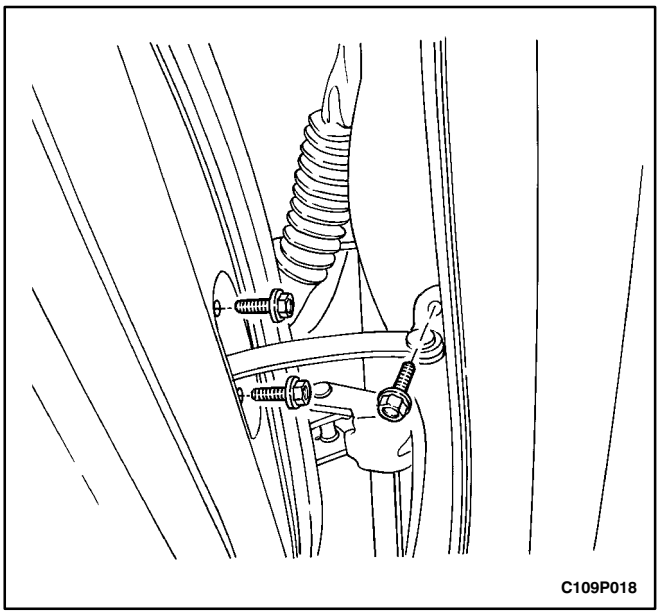

DOOR HOLD-OPEN LINK

Removal Procedure

1. Remove the door seal trim. Refer to “Door Seal Trim” in this section.
2. Remove the bolts on the door and on the body.
3. Remove the door hold-open link. (Front door shown, rear door similar.)

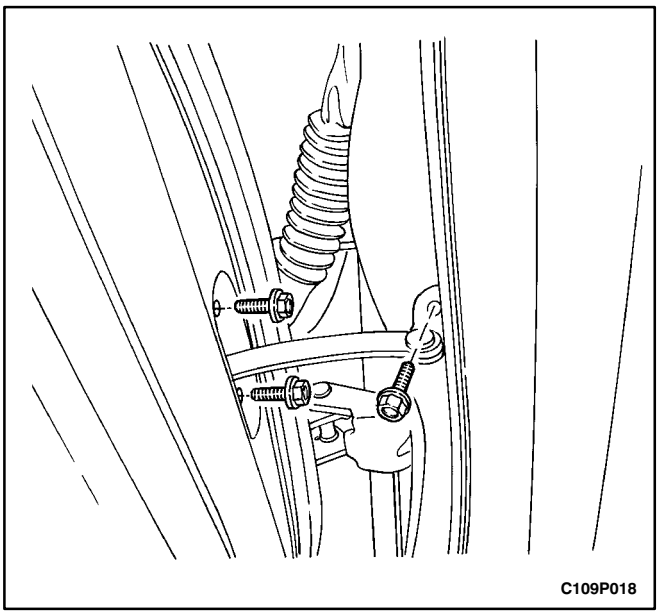

Installation Procedure

Notice: Dissimilar metals in direct contact with each other may corrode rapidly. Make sure to use the correct fasteners to prevent premature corrosion.

1. Install the door hold-open link to the door and the body with the bolts. (Front door shown, rear door similar.)

   ### Tighten

   Tighten the door hold-open link-to-body bolt to 25 N•m (18 lb-ft).

   Tighten the door hold-open link-to-door bolts to 7 N•m (62 lb-in).

2. Install the door seal trim. Refer to “Door Seal Trim” in this section.

GENERAL DESCRIPTION AND SYSTEM OPERATION

DOOR LOCK STRIKER

The front and the rear door lock strikers each consist of a striker with two screws threaded into a floating cage plate in the B-pillars and C-pillars. The door is secured in the closed position when the door lock fork snaps over and engages the striker.

CHILDPROOF REAR DOOR LOCK

The childproof rear door locks help prevent passengers, especially children, from opening the rear doors of the vehicle from the inside.

In order to activate these locks, move the levers of both rear doors to the lock position. Then, close both doors. Rear passengers will be unable to open the doors from inside of the vehicle.

In order to deactivate the childproof rear door lock, unlock the door from the inside of the vehicle and open the door from the outside. Move the lever to the unlock position. The rear door will now work normally.

POWER DOOR LOCKS

The power door locks use a solenoid that is contained in each door lock assembly. The door locks are activated by the actuator on the inside door handle or by the lock cylinder on the driver's door only. When the driver's door is locked or unlocked by the actuator or lock cylinder, all doors are locked or unlocked accordingly.

POWER WINDOWS

The power windows are controlled by electrical switches on the door panels and are operated by a motor at each window regulator. Each door has a switch to control its window, and the driver's door has four switches to control all door windows on the vehicle. The windows are lowered by pressing the switch and raised by pulling up on the switch. The window will stop movement when the switch is released or when the window is completely open or closed.

The driver's window lowers automatically. By pressing and releasing the switch, the driver's window will lower and will stop only when the switch is activated again or when the window is completely open.

The driver's door control also contains a button that, when pressed, will prevent the operation of the front passenger door or the rear door windows.

MANUAL REAR WINDOWS

Each manual rear window is controlled by rotating a handle that is located on the rear door panel. The rear window handle is connected to the window regulator, which raises and lowers the window.

SECTION 9Q

ROOF

CAUTION: Disconnect the negative battery cable before removing or installing any electrical unit or when a tool or equipment could easily come in contact with exposed electrical terminals. Disconnecting this cable will help prevent personal injury and damage to the vehicle. The ignition must also be in LOCK unless otherwise noted.

TABLE OF CONTENTS

Specifications 9Q-1
Fastener Tightening Specifications 9Q-1
Special Tools 9Q-2
Special Tools Table 9Q-2
Schematic and Routing Diagrams 9Q-3
Power Sunroof System 9Q-3
Diagnosis 9Q-4
Power Sunroof 9Q-4
Maintenance and Repair 9Q-7
On-Vehicle Service 9Q-7
Power Sunroof 9Q-7
Formed Headliner 9Q-10
Sun Visors With Vanity Mirror 9Q-12
Passenger Assist Handles 9Q-13
Power Sunroof Control Switch 9Q-14
General Description and System Operation 9Q-15
Roof 9Q-15
Power Sunroof/Sunroof Control Switch 9Q-15
Sun Visors With Vanity Mirror 9Q-15
Passenger Assist Handles 9Q-15
Coat Hooks 9Q-15

SPECIFICATIONS

FASTENER TIGHTENING SPECIFICATIONS

Application	N•m	Lb-Ft	Lb-In
Power Sunroof Control Switch Screws	2	–	18
Passenger Assist Handle Screws	3	–	27
Sun Visor Screws	4	–	35
Sun Visor Support Screw	1.5	–	13
Sunroof Housing Bolts	10	–	89
Sunroof Motor Screws	3	–	27

SPECIAL TOOLS

SPECIAL TOOLS TABLE

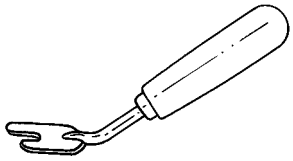 A109G029	**KM-475-B Trim Remover**

SCHEMATIC AND ROUTING DIAGRAMS

POWER SUNROOF SYSTEM

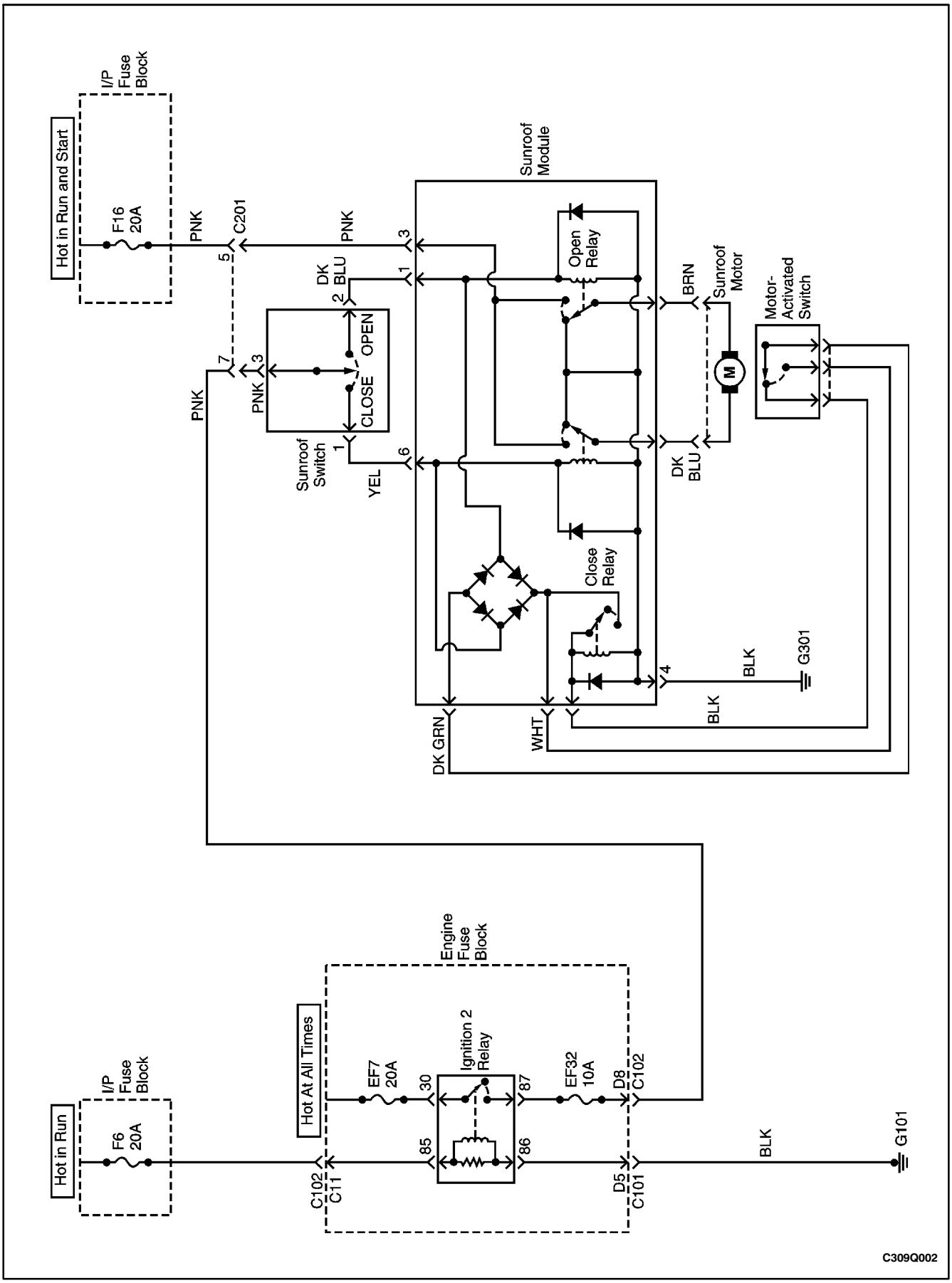

DIAGNOSIS

POWER SUNROOF

Test Description

The number(s) below refer to step(s) on the diagnostic table.

3. The terminals are not marked on the relay socket, but the terminals are marked on the underside of the relay.
20. The meter will show the same voltage at both switch positions, but one of the switch positions will show reverse polarity.

Power Sunroof Does Not Work

Step	Action	Value	Yes	No
1	Check fuses F6, EF7, and F16. Is any fuse blown?	–	Go to *Step 2*	Go to *Step 3*
2	1. Check for a short circuit and repair if necessary. 2. Replace the fuse(s). Is the repair complete?	–	System OK	–
3	1. Remove the Ignition 2 relay. 2. Turn the ignition ON. 3. Check the voltage at the Ignition 2 relay socket, terminals 30 and 85. Does the voltmeter indicate the specified value at both locations?	11-14 V	Go to *Step 5*	Go to *Step 4*
4	Repair the power supply to the Ignition 2 relay. Is the repair complete?	–	System OK	–
5	1. With the Ignition 2 relay removed, use the underside of the relay to identify the location of terminal 86 and terminal 30 of the relay socket. 2. Connect a voltmeter between terminal 30 and terminal 86 of the relay socket. Does the voltmeter indicate the specified value?	11-14 V	Go to *Step 7*	Go to *Step 6*
6	Repair the open circuit between ground and terminal 86 of the ignition 2 relay. Is the repair complete?	–	System OK	–
7	1. Temporarily substitute a known good relay for the ignition 2 relay. 2. Turn the Ignition ON. 3. Attempt to operate the sunroof. Does the sunroof operate?	–	Go to *Step 9*	Go to *Step 8*
8	1. Return the substituted relay to its original position. 2. Replace the Ignition 2 relay. Is the repair complete?	–	System OK	–
9	1. Turn the ignition ON. 2. At the lamp/sunroof switch, check the voltage terminal 3 of the switch connector. Does the voltmeter indicate the specified value?	11-14 V	Go to *Step 11*	Go to *Step 10*
10	Repair the open circuit between fuse EF32 and the sunroof switch. Is the repair complete?	–	System OK	–

Power Sunroof Does Not Work (Cont'd)

Step	Action	Value	Yes	No
11	1. Turn the ignition ON. 2. With the sunroof switch connected, turn the switch to the closed position. 3. Check the voltage at terminal 1 of the switch connector. 4. With the sunroof switch connected, turn the switch to the open position. 5. Check the voltage at terminal 2 of the switch connector. Are both voltages equal to the specified value?	11-14 V	Go to *Step 13*	Go to *Step 12*
12	Replace the sunroof switch. Is the repair complete?	–	System OK	–
13	1. Disconnect the sunroof module six-pin electrical connector. 2. Use an ohmmeter to measure the resistance between terminal 4 and ground. Is the resistance within the specified value?	≈ 0 Ω	Go to *Step 15*	Go to *Step 14*
14	Repair the open circuit between ground and terminal 4 of the sunroof module connector. Is the repair complete?	–	System OK	–
15	1. With the sunroof module still disconnected, turn the ignition ON. 2. Check the voltage at terminal 3 of the connector for the sunroof module. Does the voltmeter indicate the specified value?	11-14 V	Go to *Step 17*	Go to *Step 16*
16	Repair the open circuit between fuse F16 and terminal 3 of the sunroof module. Is the repair complete?	–	System OK	–
17	1. With the sunroof module still disconnected, turn the ignition ON. 2. Check the voltage at terminal 6 of the sunroof module with the sunroof switch in the CLOSE position. Does the voltmeter indicate the specified value?	11-14 V	Go to *Step 19*	Go to *Step 18*
18	Repair the open circuit between the sunroof switch and the sunroof module. Is the repair complete?	–	System OK	–
19	1. With the sunroof module still disconnected, turn the ignition ON. 2. Check the voltage at terminal 1 of the sunroof module with the sunroof switch in the OPEN position. Does the voltmeter indicate the specified value?	11-14 V	Go to *Step 20*	Go to *Step 18*
20	1. Reconnect the sunroof module. 2. Remove the sunroof motor, but leave the connectors attached. 3. Attempt to operate the motor in both directions by using the sunroof switch. Does the motor operate?	–	Go to *Step 21*	Go to *Step 22*
21	Repair the jammed sunroof mechanism. Is the repair complete?	–	System OK	–

Power Sunroof Does Not Work (Cont'd)

Step	Action	Value	Yes	No
22	1. Disconnect both of the one-wire connectors at the sunroof motor. 2. Connect a voltmeter between the two 1-wire connectors. 3. Turn the ignition ON. 4. Turn the sunroof switch to the CLOSE position and observe the voltmeter reading. 5. Turn the sunroof switch to the OPEN position and observe the voltmeter reading. Does the voltmeter indicate the specified value when the switch is each position (OPEN and CLOSE)?	11-14 V	Go to *Step 24*	Go to *Step 23*
23	Replace the sunroof module. Is the repair complete?	–	System OK	–
24	Replace the sunroof motor. Is the repair complete?	–	System OK	–

MAINTENANCE AND REPAIR

ON-VEHICLE SERVICE

POWER SUNROOF

Removal Procedure

1. Disconnect the negative battery cable.
2. Remove the headliner. Refer to “Formed Headliner” in this section.
3. Remove the drain hoses.

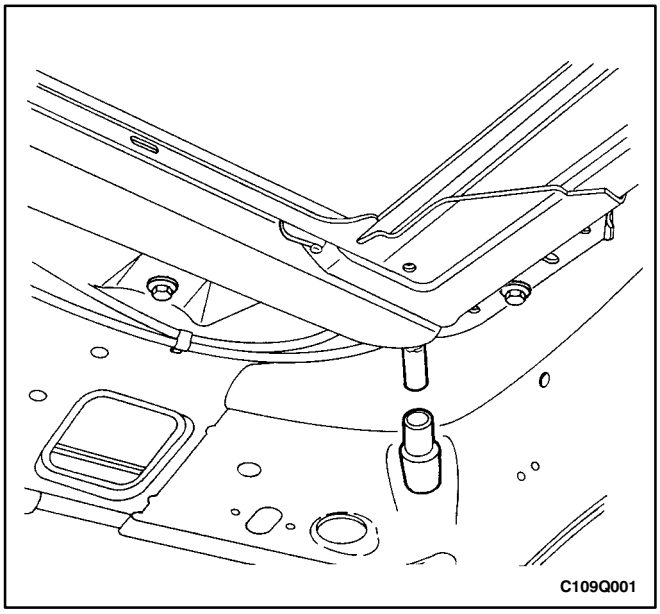

4. Disconnect the electrical connectors.
5. Remove the screws and the motor.

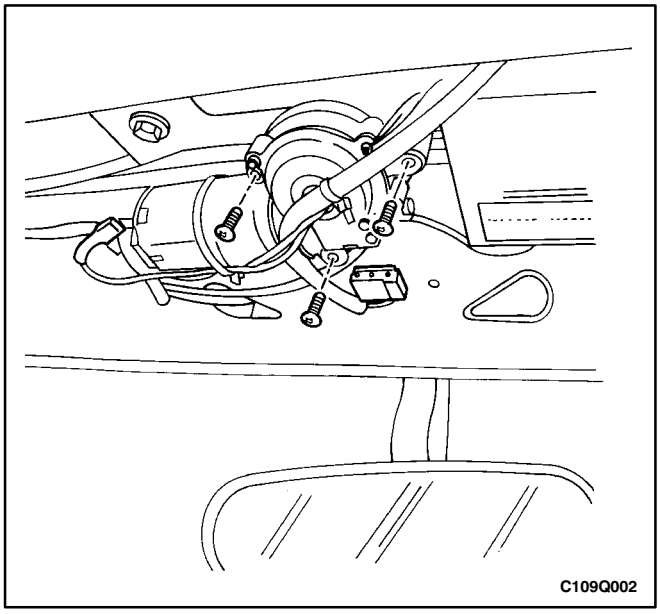

6. Remove the motor control module.
7. Remove the bolts and the housing from the vehicle.

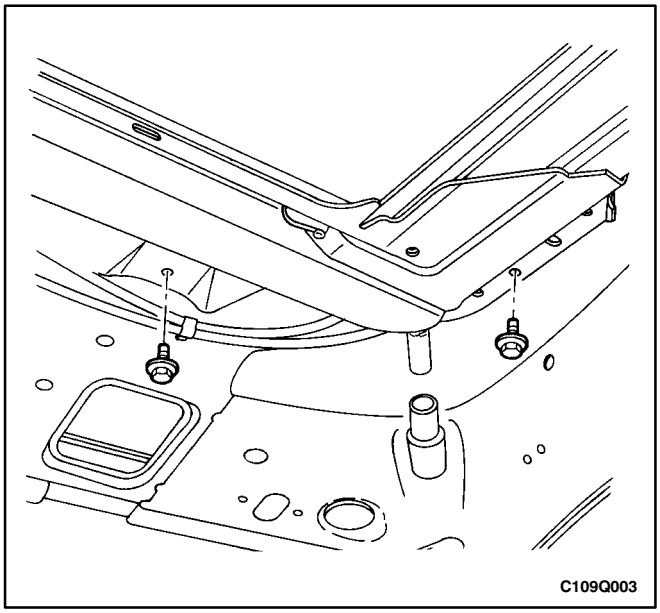

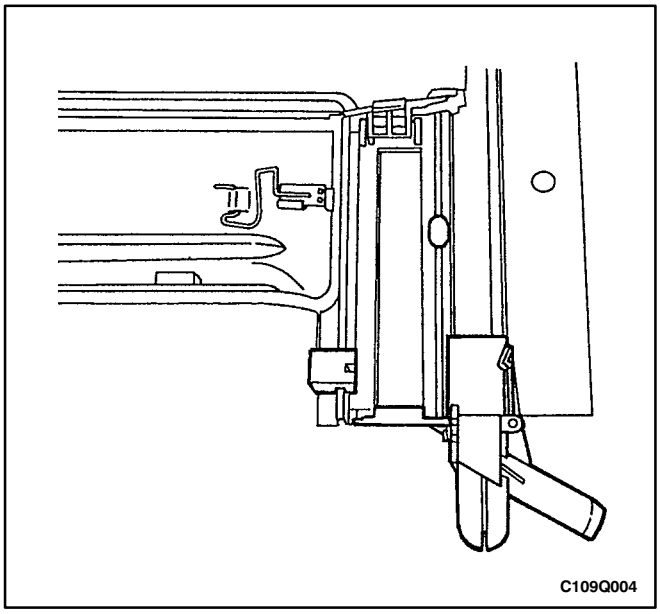

8. Remove the rubber end caps.
9. Remove the drain nozzles.
10. Remove the shade stops.
11. Remove the glass stops.

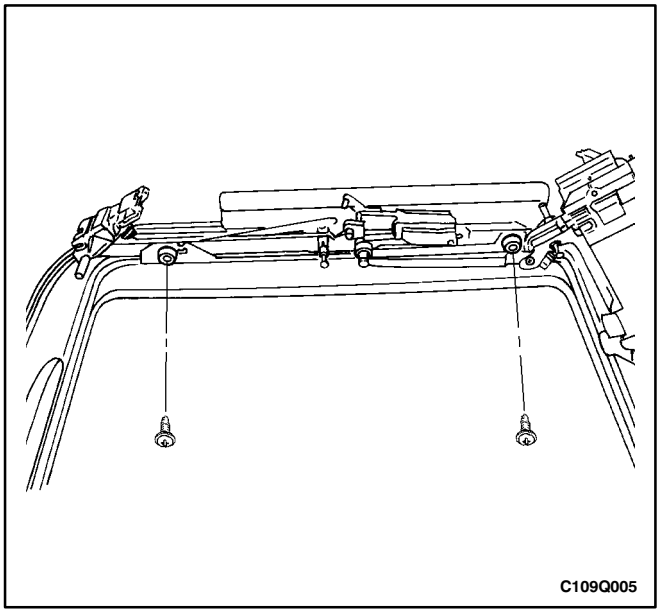

12. Remove the shade.
13. Remove the glass and the frame from the housing.
14. Remove the plastic trim.
15. Remove the screws and the glass from the frame.

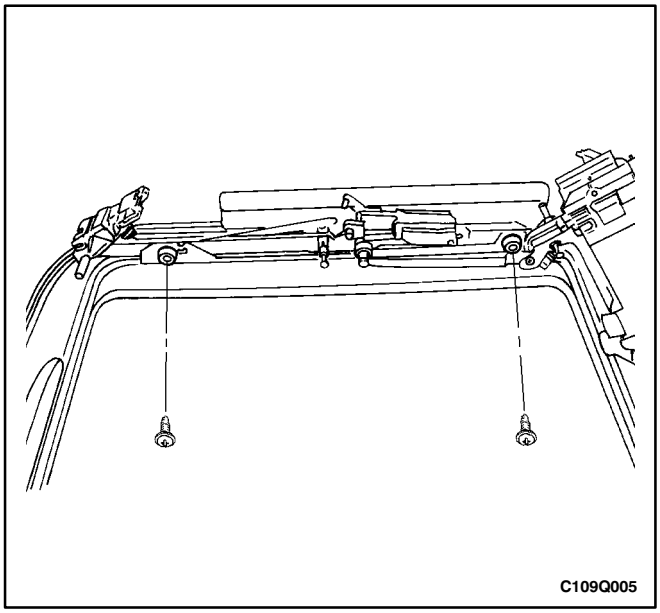

Installation Procedure

Notice: Dissimilar metals in direct contact with each other may corrode rapidly. Make sure to use the correct fasteners to prevent premature corrosion.

1. Install the glass to the frame with the screws.

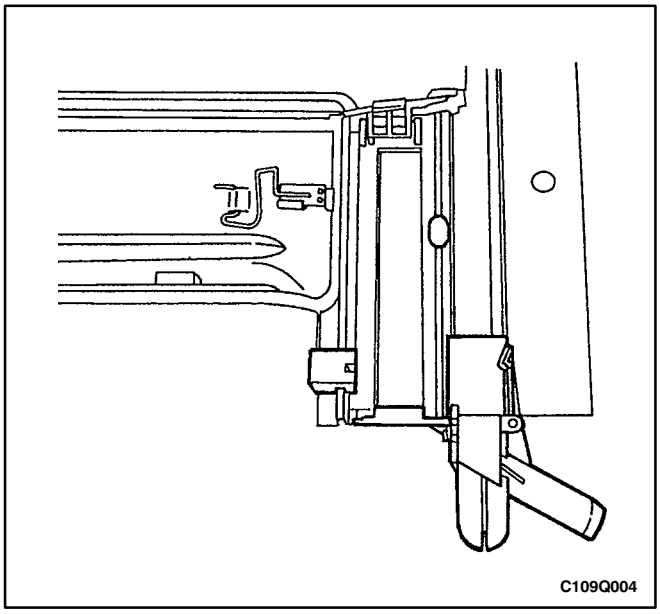

2. Install the plastic trim.
3. Install the glass and the frame to the housing.
4. Install the shade.
5. Install the glass stops.
6. Install the shade stops.
7. Install the drain nozzles.
8. Install the rubber end caps.

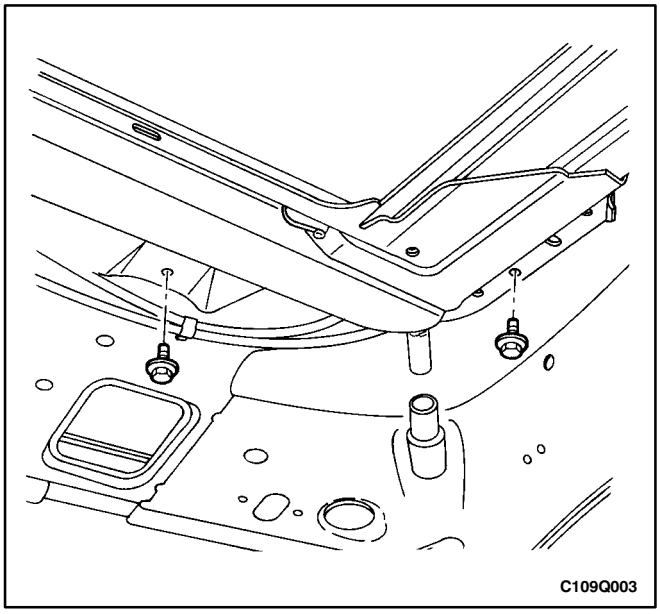

9. Install the housing to the roof of the vehicle with the bolts.

Tighten

Tighten the sunroof housing bolts to 10 N•m (89 lb-in).

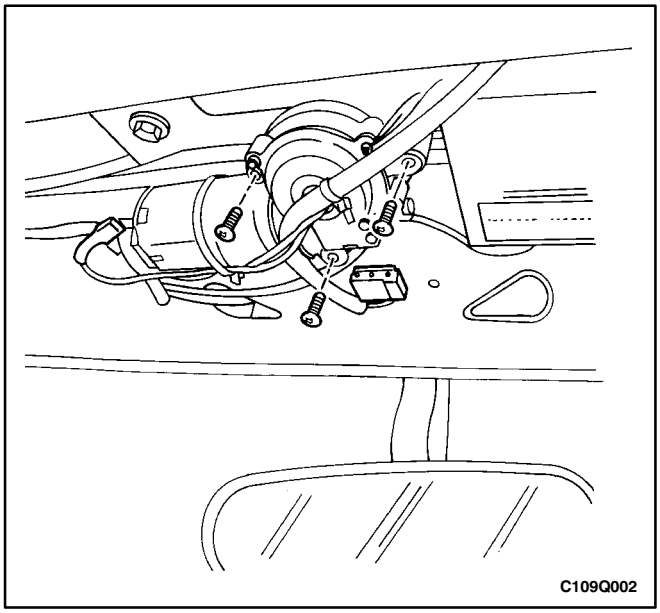

10. Install the motor control module.
11. Install the motor with the screws.

Tighten

Tighten the sunroof motor screws to 3 N•m (27 lb-in).

12. Connect the electrical connectors.

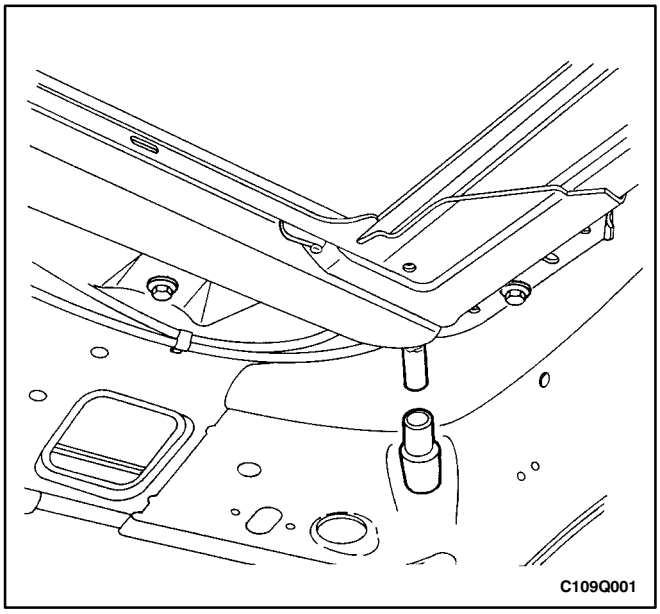

13. Install the drain hoses.
14. Install the headliner. Refer to “Formed Headliner” in this section.
15. Connect the negative battery cable.

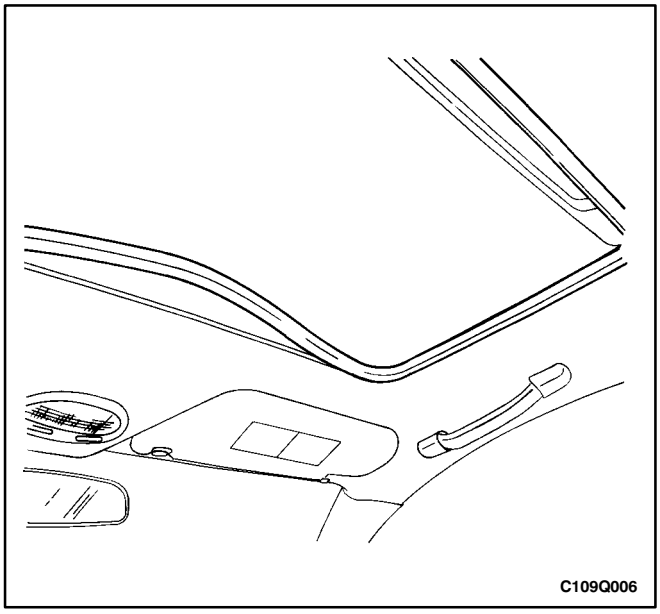

FORMED HEADLINER

Tools Required

KM-475-B Trim Remover

Removal Procedure

1. Disconnect the negative battery cable.
2. Remove the sunroof molding, if equipped.
3. Remove the passenger assist handles. Refer to “Passenger Assist Handles” in this section.
4. Remove the plastic retaining clips in the headliner on the driver’s side.
5. Remove the sun visors. Refer to “Sun Visors” in this section.
6. Remove the power sunroof control switch, if equipped. Refer to “Power Sunroof Control Switch” in this section.
7. Remove the ultrasonic sensor. Refer to *Section 9T, Remote Keyless Entry and Anti-Theft System*.
8. Remove the A-, B-, and C-pillar trim panels. Refer to *Section 9G, Interior Trim.*

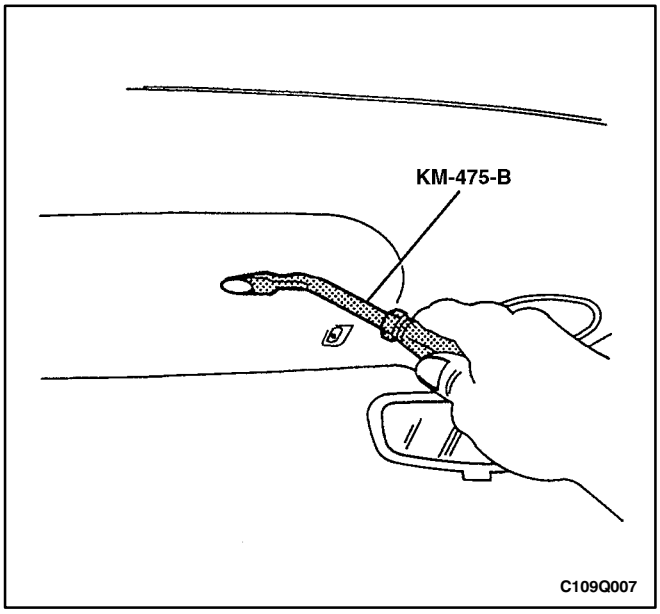

9. Remove the plastic retainers in the headliner using the trim remover KM-475-B.
10. Recline both front seats.
11. Remove the headliner through a rear door.

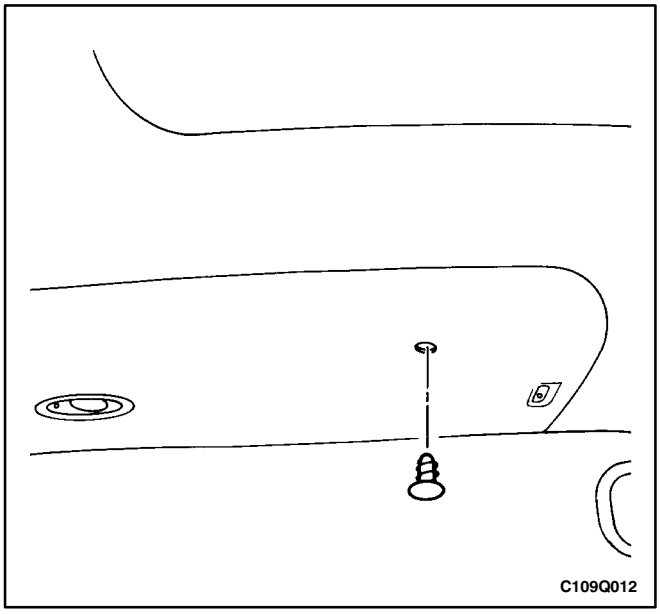

Installation Procedure

1. Recline both front seats.
2. Insert the headliner through a rear door.
3. Install the headliner behind the seals around the doors.
4. Install the plastic retainers.

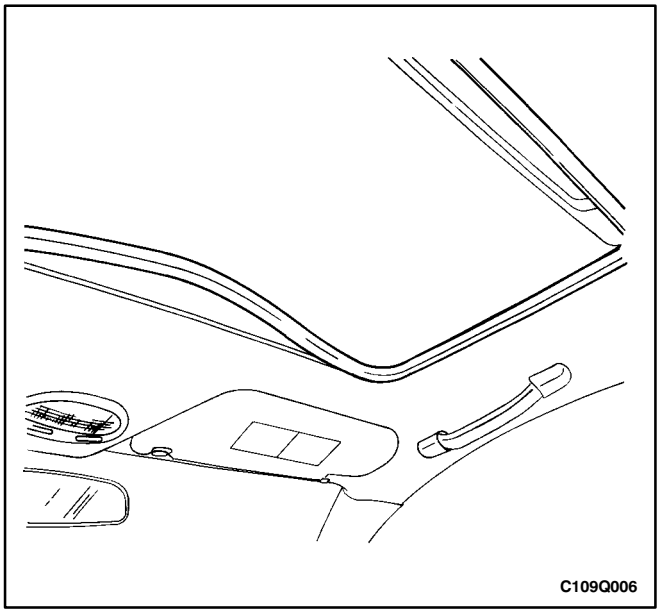

5. Install the A-, B-, and C-pillar trim panels. Refer to *Section 9G, Interior Trim.*
6. Install the power sunroof switch, if equipped. Refer to “Power Sunroof Control Switch” in this section.
7. Install the sun visors. Refer to “Sun Visors” in this section.
8. Install the plastic retainers in the headliner on the driver’s side.
9. Install the passenger assist handles. Refer to “Passenger Assist Handles” in this section.
10. Install the ultrasonic sensor. Refer to *Section 9T, Remote Keyless Entry and Anti-Theft System*.
11. Install the sunroof molding, if equipped.
12. Connect the negative battery cable.

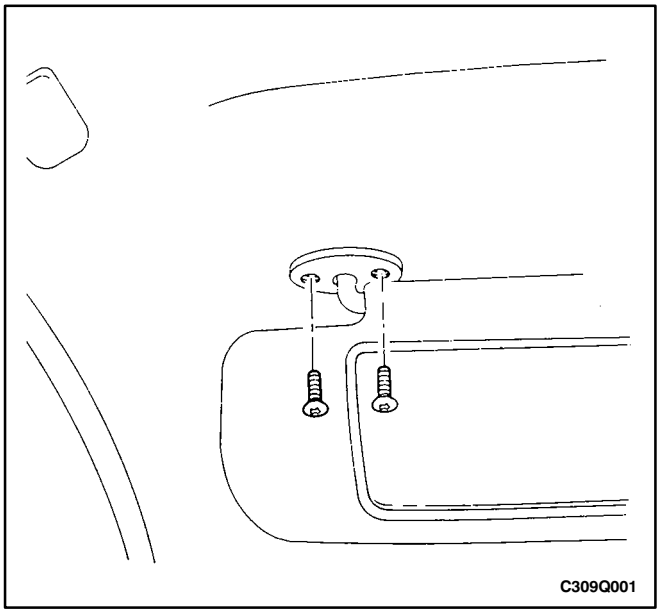

SUN VISORS WITH VANITY MIRROR

Removal Procedure

1. Remove the screws and the sun visor from the headliner.
2. Disconnect the vanity mirror electrical connector. Refer to *Section 9B, Lighting Systems.*

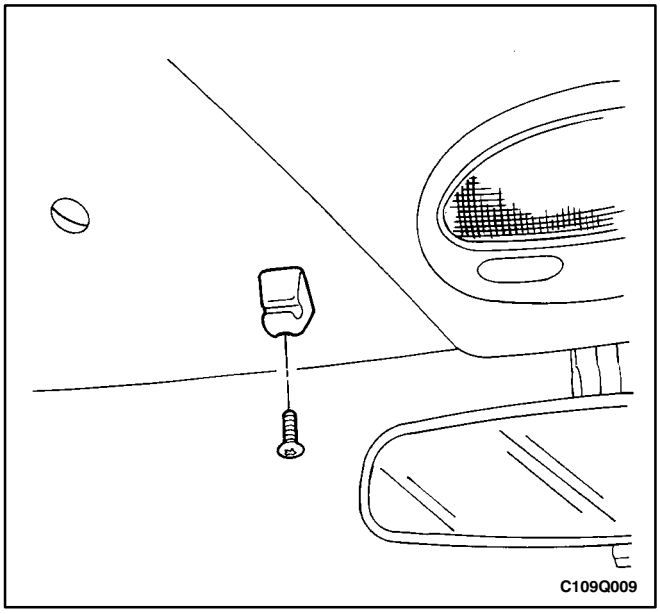

3. Remove the screw and the sun visor support from the headliner.

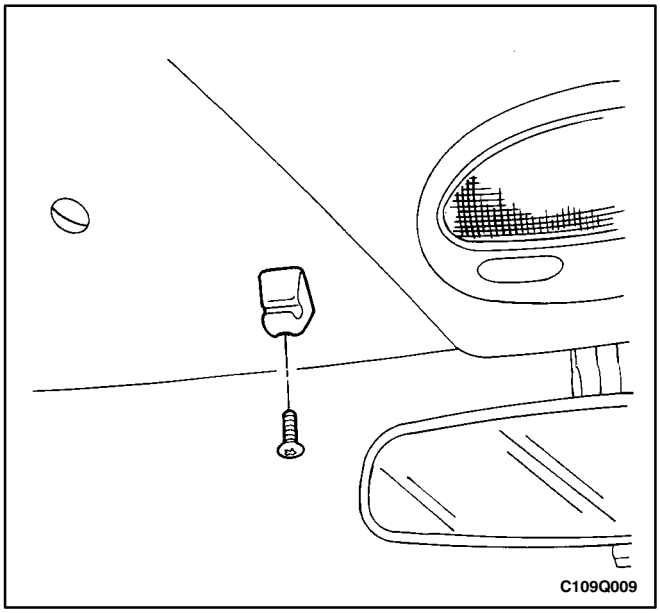

Installation Procedure

Notice: Dissimilar metals in direct contact with each other may corrode rapidly. Make sure to use the correct fasteners to prevent premature corrosion.

1. Install the sun visor support to the headliner with the screw.

Tighten

Tighten the sun visor support screw to 1.5 N•m (13 lb-in).

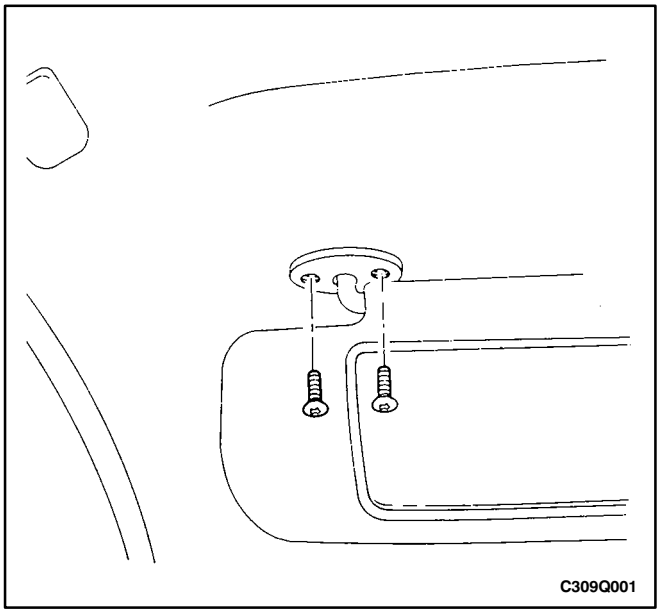

2. Connect the vanity mirror electrical connector. Refer to *Section 9B, Lighting Systems.*
3. Install the sun visor to the headliner with the screws.

Tighten

Tighten the sun visor screws to 4 N•m (35 lb-in).

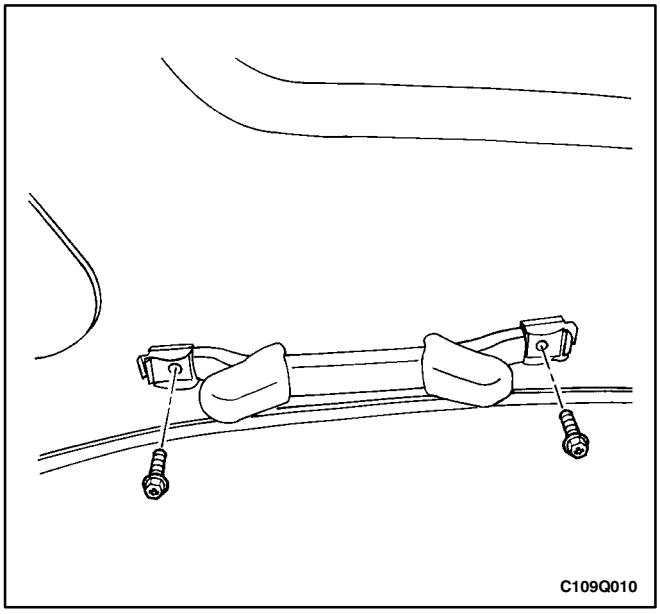

PASSENGER ASSIST HANDLES

Removal Procedure

1. Reposition the plastic caps to reveal the assist handle screws.
2. Remove the screws and the assist handle from the headliner.

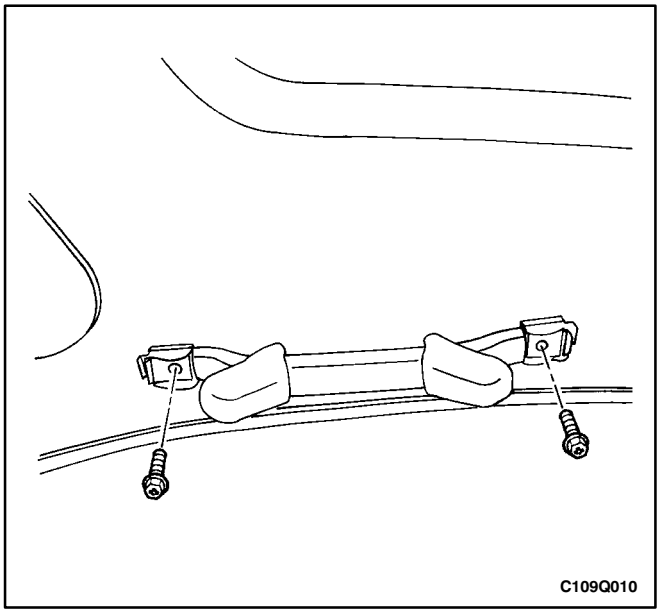

Installation Procedure

Notice: Dissimilar metals in direct contact with each other may corrode rapidly. Make sure to use the correct fasteners to prevent premature corrosion.

1. Install the assist handle to the headliner with the screws.

Tighten

Tighten the passenger assist handle screws to 3 N•m (27 lb-in).

2. Install the plastic caps over the assist handle screws.

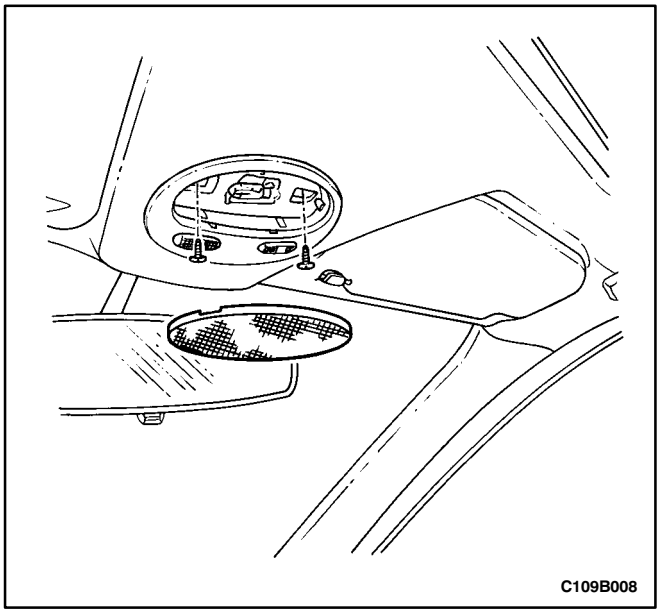

POWER SUNROOF CONTROL SWITCH

Removal Procedure

1. Disconnect the negative battery cable.
2. Pry off the interior courtesy lamp lens.
3. Remove the screws and the switch.
4. Disconnect the electrical connector.

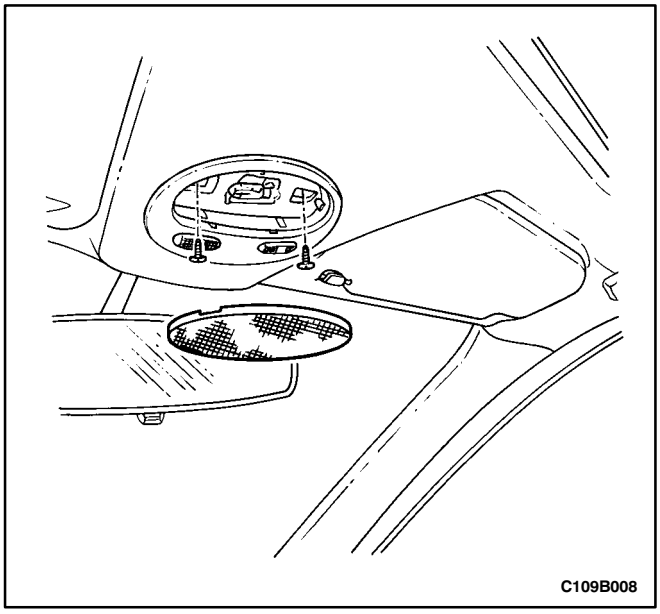

Installation Procedure

1. Connect the electrical connector.

Notice: Dissimilar metals in direct contact with each other may corrode rapidly. Make sure to use the correct fasteners to prevent premature corrosion.

2. Install the sunroof control switch with the screws.

Tighten

Tighten the power sunroof control switch screws to 2 N•m (18 lb-in).

3. Install the interior courtesy lamp lens.
4. Connect the negative battery cable.

GENERAL DESCRIPTION AND SYSTEM OPERATION

ROOF

The roof is a one-piece painted metal unit which incorporates a single solid headliner. There are two moldings, one per side on the vehicle's roof, which enclose and hide the roof rail seams. The roof moldings are serviceable as individual units.

The one-piece formed headliner consists of a molded substrate covered with a foam-backed cloth facing. The one-piece construction requires the headliner be serviced as a complete assembly.

POWER SUNROOF/SUNROOF CONTROL SWITCH

The sunroof is

- Intended to provide light and air through the roof of the vehicle.
- Built into the roof.
- Made of glass.
- Equipped with a sunshade that opens and closes manually.
- Powered by an electric motor.
- Controlled by a toggle switch built into the interior courtesy lamp assembly.

The sunroof control switch is

- A toggle button located on the right side of the interior courtesy lamp assembly.

To operate the sunroof,

- The ignition must be in the ON position.

Tilting the Sunroof, Open and Closed

To tilt open the rear end of the sunroof,

- Press and hold the forward portion of the toggle button until the sunroof tilts open.

To close the sunroof from a tilted-open position

- Press and hold the rear portion of the toggle button until the sunroof tilts closed.

Sliding the Sunroof, Open and Closed

To slide open the sunroof,

- Press the rear portion of the toggle button until the sunroof slides. If the sun shade is closed, the sunroof will pull the sunshade open when the sunroof slides open.

To close the sunroof from a slid-open position,

- Press the forward portion of the toggle button until the sunroof slides closed.

SUN VISORS WITH VANITY MIRROR

The sun visors swing down in order to block out glare. They also swing to the side when they are released from the support. To replace the vanity mirror lamp, refer to *Section 9B, Lighting Systems*.

PASSENGER ASSIST HANDLES

There is a passenger assist handle for each rear outboard seat and for the front passenger seat. Passengers can use these handles to assist in keeping their balance over rough roads or during sharp turns.

COAT HOOKS

The coat hooks are located on the left and the right rear passenger assist handles.

SECTION 9R

BODY FRONT END

TABLE OF CONTENTS

Specifications 9R-1
Fastener Tightening Specifications 9R-1
Special Tools 9R-2
Special Tools Table 9R-2
Maintenance and Repair 9R-3
On-Vehicle Service 9R-3
Lubrication 9R-3
Fasteners 9R-3
Anticorrosion Materials 9R-3
Front End Sealing 9R-3
Cowl Vent Grille 9R-3
Hood 9R-4
Hood Hinges 9R-5
Hood Strut 9R-5
Hood Secondary Latch 9R-6
Hood Latch Release Cable 9R-7
Hood Insulation 9R-7
Radiator Grille 9R-8
Front Wheel Well Splash Shield 9R-9
Fender 9R-9
Tie down Hooks 9R-13
General Description and System Operation 9R-14
Body Front End 9R-14

SPECIFICATIONS

FASTENER TIGHTENING SPECIFICATIONS

Application	N•m	Lb-Ft	Lb-In
A-Pillar Fender Bolt	10	–	89
Cowl Vent Grille Screws	3	–	27
Front Fascia-to-Fender Bolts	2.5	–	22
Front of Fender Bolts	10	–	89
Front Wheel Well Splash Shield Screws	2	–	18
Hinge Bolts	20	15	–
Hood-to-Hinge Bolts	20	15	–
Hood Latch Bolts	10	–	89
Hood Release Handle Screw	2.5	–	22
Lower Fender Bolts	10	–	89
Radiator Grille Bolts	10	–	88
Radiator Grille Nuts	4	–	35
Radiator Grille Screws	2	–	18
Resornator Bolt	9	–	80
Towing Eye Bolts	25	18	–
Upper Fender Bolts	10	–	88
Washer Reservoir Bolt	9	–	80

SPECIAL TOOLS

SPECIAL TOOLS TABLE

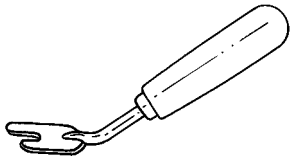 A109G029	**KM-475-B** **Trim Remover**

MAINTENANCE AND REPAIR

ON-VEHICLE SERVICE

LUBRICATION

The hood hinges and the locking mechanisms require periodic lubrication for proper operation. Refer to *Section 1, General Information* for the specific types and intervals of lubrication.

FASTENERS

Notice: Dissimilar metals in direct contact with each other may corrode rapidly. Make sure to use the correct fasteners to prevent premature corrosion.

Many aluminum components are used on current models. Aluminum in contact with steel may corrode rapidly if it is not protected by special finishes or isolators.

The fasteners used have a special finish which provides adequate protection from corrosion. These special fasteners differ in color in order to easily identify them from the standard metric fasteners, which are medium blue in color.

When replacing fasteners, avoid substituting otherwise similar fasteners in the same location.

ANTICORROSION MATERIALS

In order to provide rust resistance, anticorrosion materials have been applied to the interior surfaces of most of the metal panels. When you service these panels, properly re-coat them with a service-type anticorrosion material if any of the original material has been disturbed.

FRONT END SEALING

All locations where water leaks may occur are sealed during production with high quality, durable sealers. If it becomes necessary to reseal specific areas, use a high quality sealer of medium-bodied consistency which will retain its flexible characteristics after curing and can be painted if necessary.

COWL VENT GRILLE

Removal Procedure

1. Raise the hood.
2. Remove the wiper arms. Refer to *Section 9D, Wipers/ Washer Systems*.
3. Remove the cowl vent grille screws and the two-piece grille.

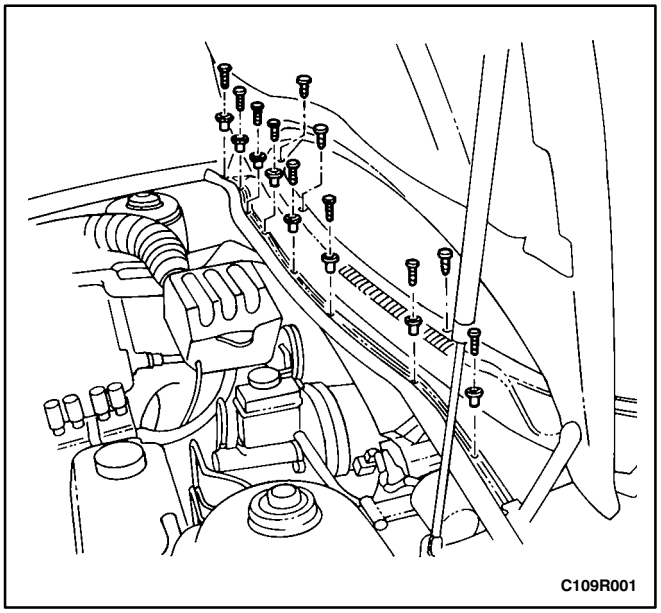

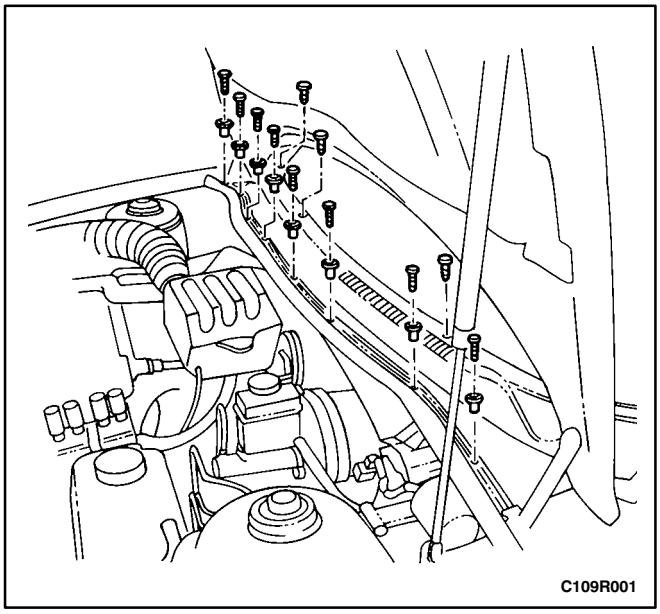

Installation Procedure

Notice: Dissimilar metals in direct contact with each other may corrode rapidly. Make sure to use the correct fasteners to prevent premature corrosion.

1. Install the two-piece grille and the cowl vent grille screws.

   Tighten

   Tighten the cowl vent grille screws to 3 N•m (26 lb-in).
2. Install the wiper arms. Refer to *Section 9D, Wipers/ Washer System.*
3. Lower the hood.

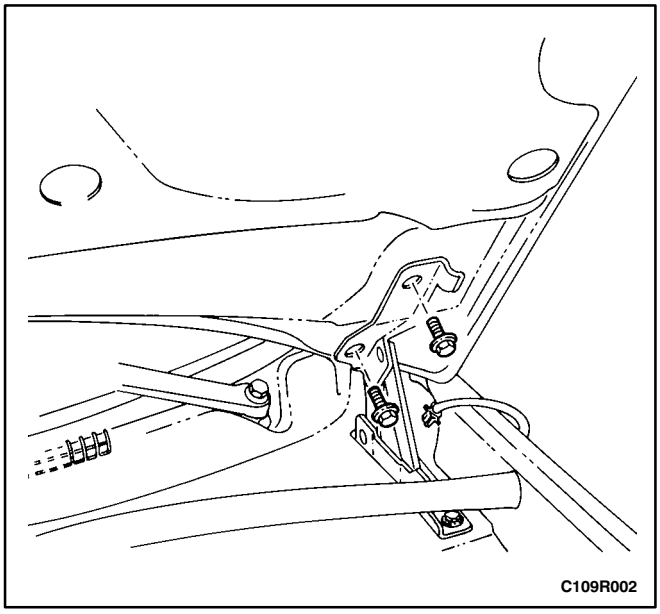

HOOD

Removal Procedure

Important: Install protective coverings over the fenders and the windshield in order to prevent damage to the paint, the glass and the moldings when you are removing and installing the hood.

1. Raise and support the hood.
2. Mark the position of the hinge to the hood in order to aid in alignment during installation.
3. Remove the washer hoses from the hood.
4. Remove the hood struts. Refer to “Hood Strut” in this section.
5. Remove the bolts retaining the hood to both hinges.
6. With the aid of another technician, remove the hood from the hinges.

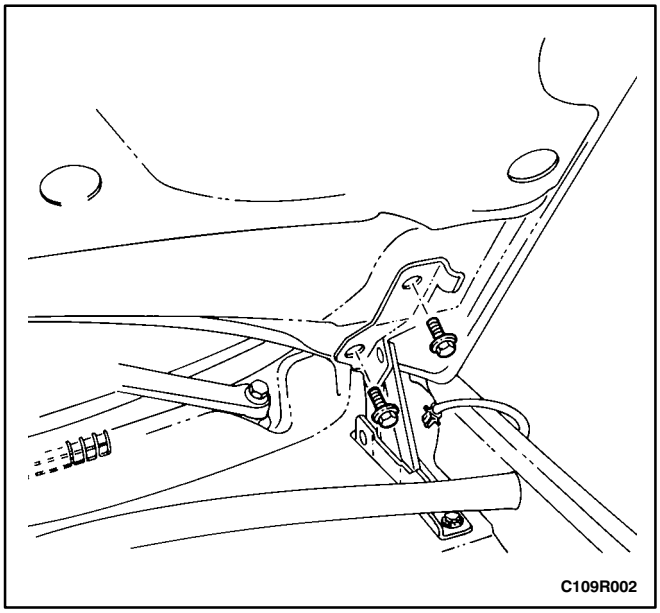

Installation Procedure

1. With the aid of another technician, position the hood in the location marked during removal.

Notice: Dissimilar metals in direct contact with each other may corrode rapidly. Make sure to use the correct fasteners to prevent premature corrosion.

2. Install the two bolts securing the hood to each hinge.

   Tighten

   Tighten the hood-to-hinge bolts to 20 N•m (15 lb-ft).
3. Install the hood struts. Refer to “Hood Strut” in this section.
4. Inspect the hood for proper alignment.
5. Install the washer hoses to the hood.

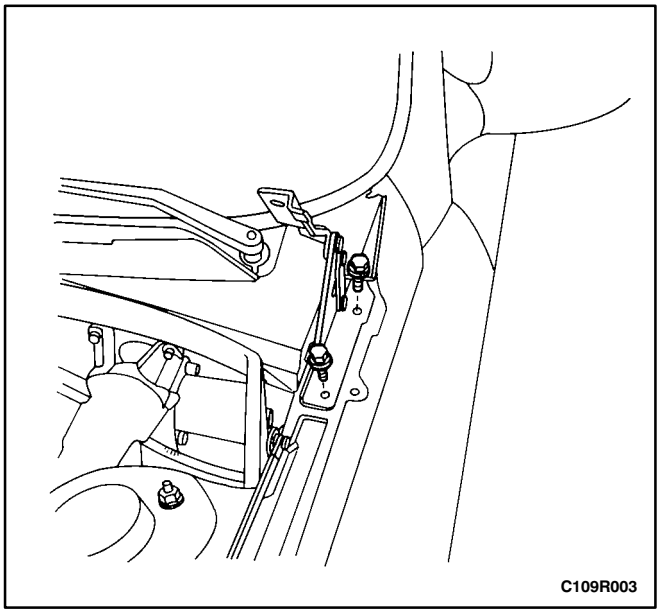

HOOD HINGES

Removal Procedure

1. Remove the hood. Refer to “Hood” in this section.
2. Reposition the cowl vent grille weather strip.
3. Remove the bolts and the hinge.

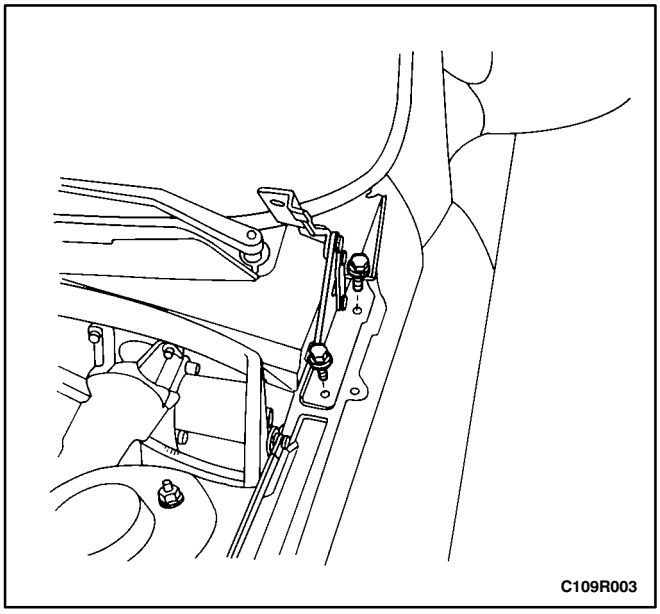

Installation Procedure

Notice: Dissimilar metals in direct contact with each other may corrode rapidly. Make sure to use the correct fasteners to prevent premature corrosion.

1. Install the hinge with the bolts.

   ### Tighten

   Tighten the hinge bolts to 20 N•m (15 lb-ft).
2. Reposition the cowl vent grille weatherstrip to its original position.
3. Install the hood. Refer to “Hood” in this section.

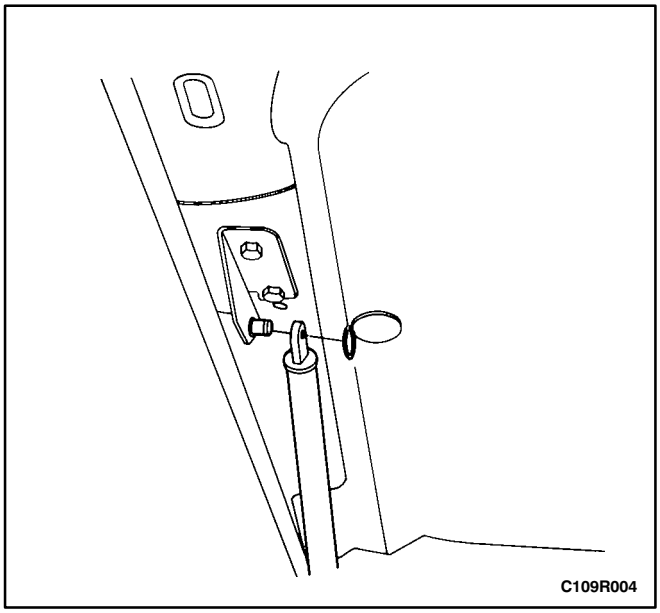

HOOD STRUT

Removal Procedure

1. Raise and support the hood.
2. Remove the retaining clips and the hood strut.

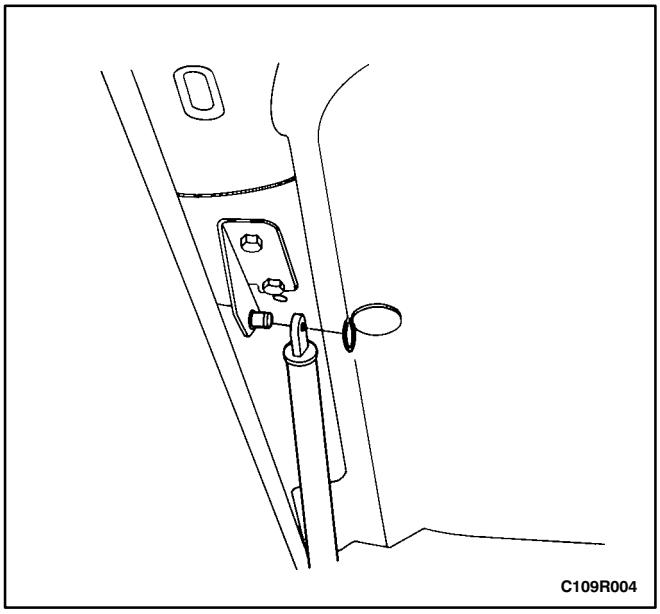

Installation Procedure

1. Install the retaining clips and the hood strut.
2. Close the hood.

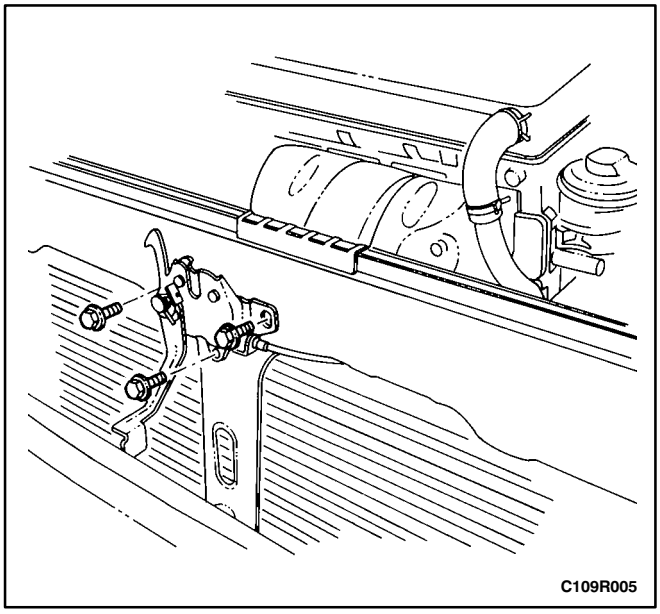

HOOD SECONDARY LATCH

Removal Procedure

1. Open the hood.
2. Mark the position of the hood latch on the radiator support in order to aid in alignment during installation.
3. Remove the bolts and the hood latch.
4. Disconnect the hood release cable.

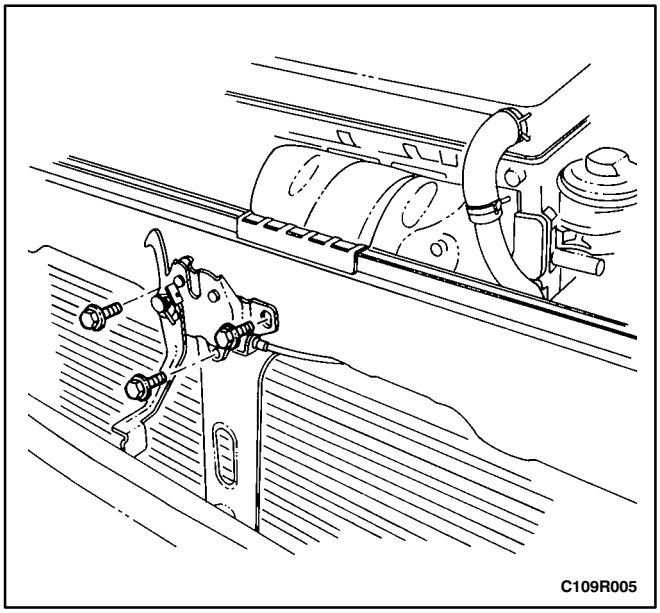

Installation Procedure

Notice: Dissimilar metals in direct contact with each other may corrode rapidly. Make sure to use the correct fasteners to prevent premature corrosion.

1. Connect the hood release cable to the latch.
2. Position the hood latch in the location marked during removal.
3. Install the hood latch with the bolts.

   Tighten

   Tighten the hood latch bolts to 10 N•m (89 lb-in).
4. Close the hood.

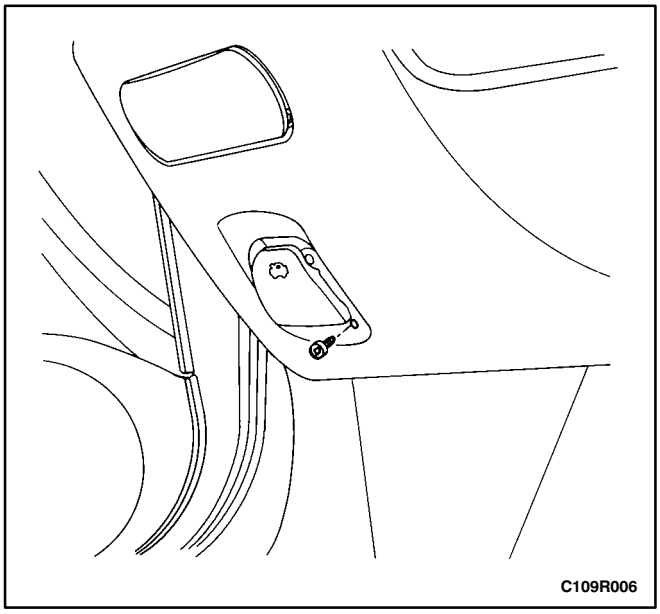

HOOD LATCH RELEASE CABLE

(Left–Hand Drive Shown, Right–Hand Drive Similar)

Removal Procedure

1. Remove the hood release handle.
2. Remove the knee bolster and the hood release handle.
3. Remove the cable from the hood release handle.
4. Remove the hood secondary latch. Refer to “Hood Secondary Latch” in this section.
5. Remove the cable from the engine compartment.

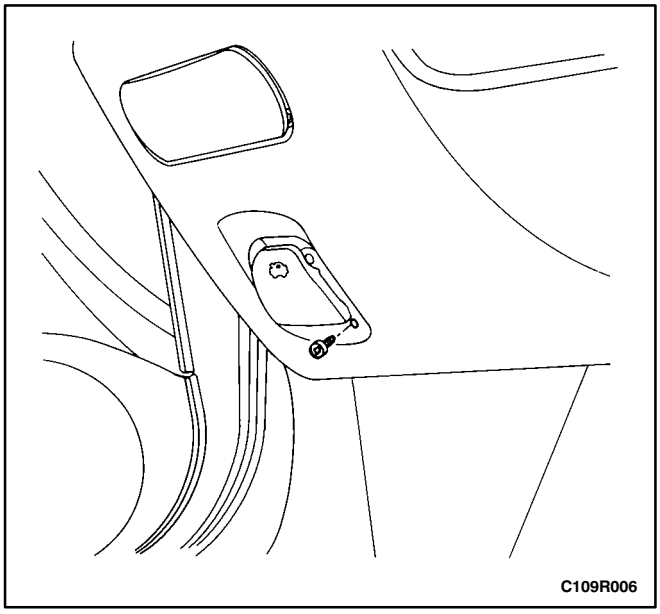

Installation Procedure

Notice: Dissimilar metals in direct contact with each other may corrode rapidly. Make sure to use the correct fasteners to prevent premature corrosion.

1. Install the cable through the engine compartment.
2. Install the hood secondary latch. Refer to “Hood Secondary Latch” in this section.
3. Install the cable to the hood release handle.
4. Install the hood release handle and the knee bolster with the screw.

   Tighten

   Tighten the hood release handle screw to 2.5 N•m (22 lb-in).

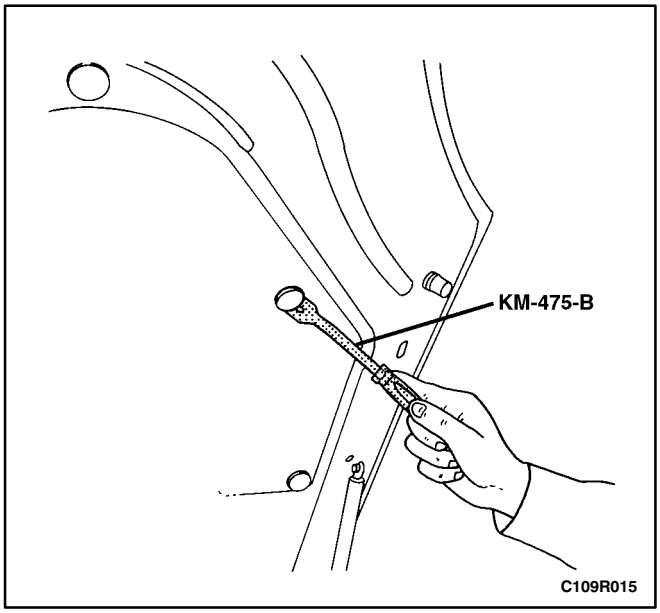

HOOD INSULATION

Tools Required

KM-475-B Trim Remover

Removal Procedure

1. Open the hood.
2. Remove the washer hose from the hood.
3. Remove the retaining clips using the trim remover KM-475-B.
4. Remove the hood insulation.

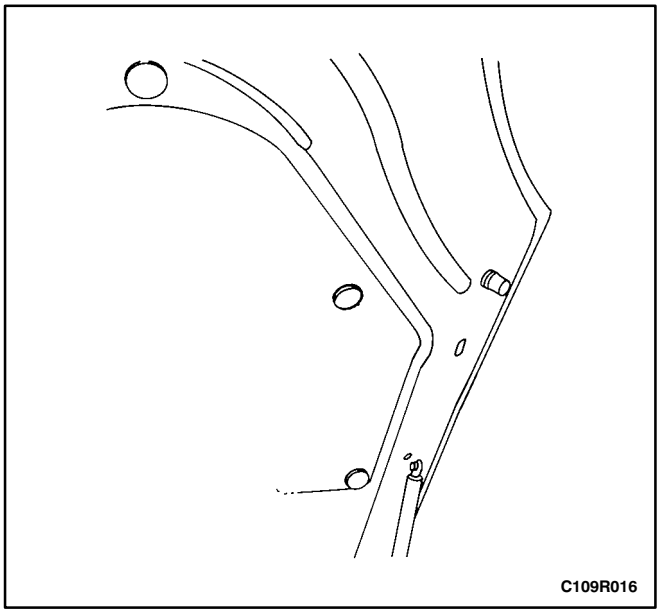

Installation Procedure

1. Install the hood insulation with the retaining clips.
2. Install the washer hose to the hood.
3. Close the hood.

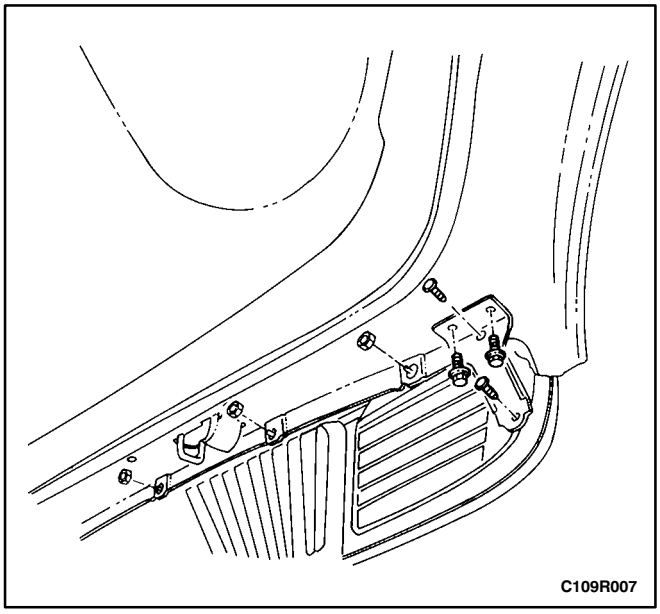

RADIATOR GRILLE

Removal Procedure

1. Open the hood.
2. Remove the screws, the bolts, and the radiator grille bracket.
3. Remove the nuts and the radiator grille.

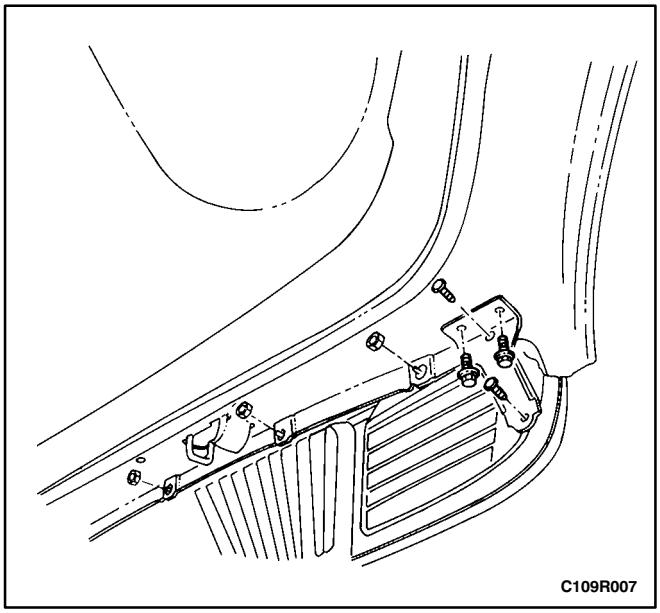

Installation Procedure

Notice: Dissimilar metals in direct contact with each other may corrode rapidly. Make sure to use the correct fasteners to prevent premature corrosion.

1. Install the radiator grille with the nuts.

   Tighten

   Tighten the radiator grille nuts to 4 N•m (35 lb-in).
2. Install the radiator grille bracket with the screws and the bolts.

   Tighten

   Tighten the radiator grille screws to 2 N•m (18 lb-in).

   Tighten

   Tighten the radiator grille bolts to 10 N•m (88 lb-in).
3. Close the hood.

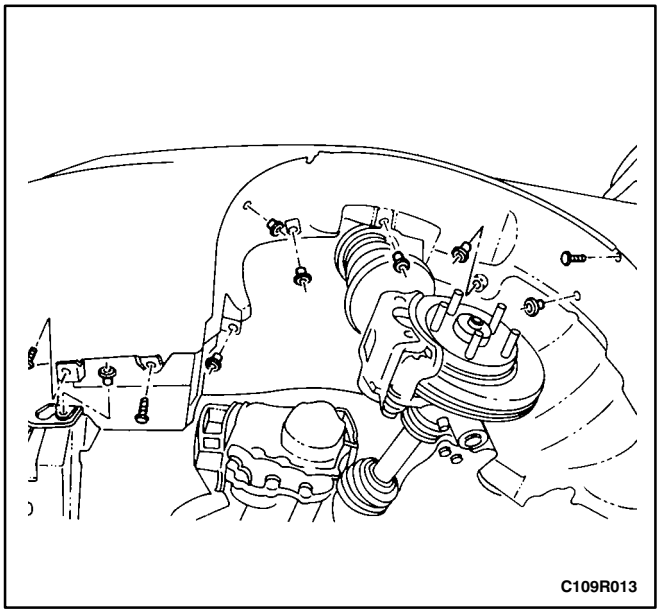

FRONT WHEEL WELL SPLASH SHIELD

Removal Procedure

1. Raise and suitably support the vehicle.
2. Remove the front wheel. Refer to *Section 2E, Tires and Wheels.*
3. Remove the front mud guard. Refer to *Section 9M, Exterior Trim.*
4. Remove the screws and the front wheel well splash shield.

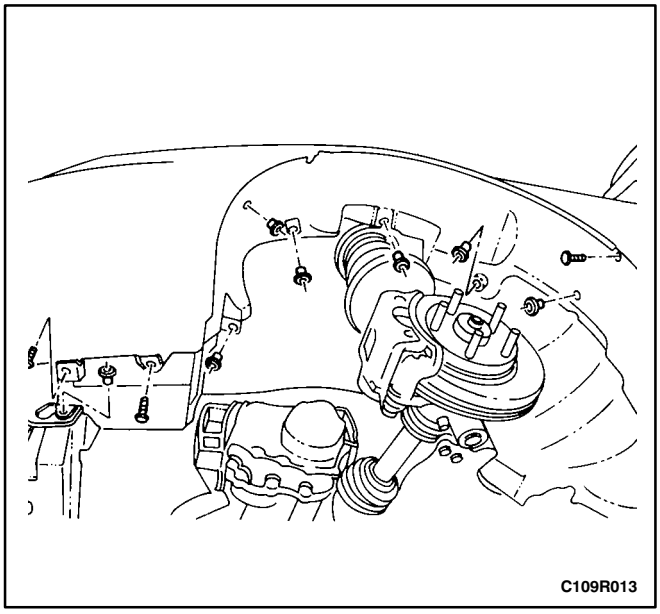

Installation Procedure

1. Install the screws and the front wheel well splash shield.

   ### Tighten

   Tighten the front wheel well splash shield screws to 2 N•m (18 lb-in).
2. Install the front mud guard. Refer to *Section 9M, Exterior Trim.*
3. Install the front wheel. Refer to *Section 2E, Tires and Wheels.*
4. Lower the vehicle.

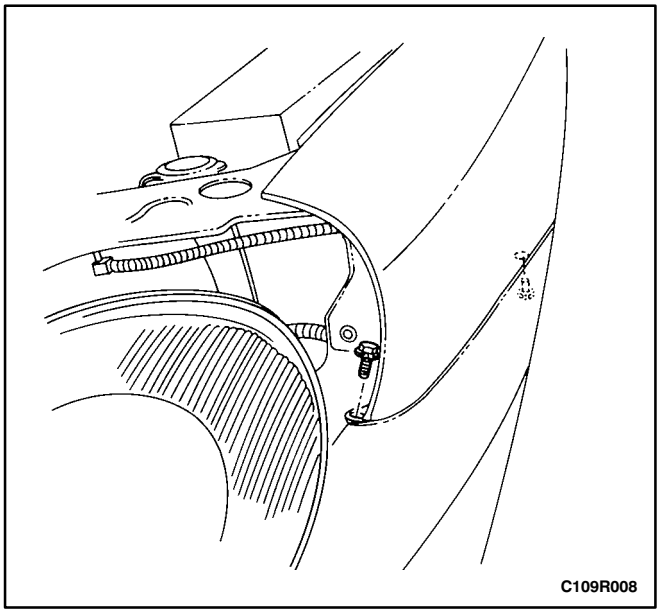

FENDER

Removal Procedure

1. Remove the front wheel well splash shield. Refer to “Front Wheel Well Splash Shield” in this section.
2. Reposition the front headlamp.
3. Remove the bolts securing the front fascia to the fender.

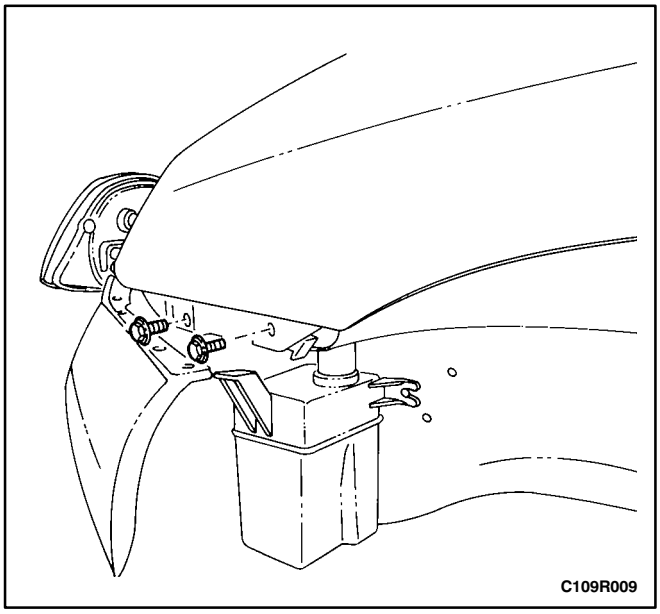

4. Reposition the front fascia.
5. Remove the fender bolts behind the front fascia.

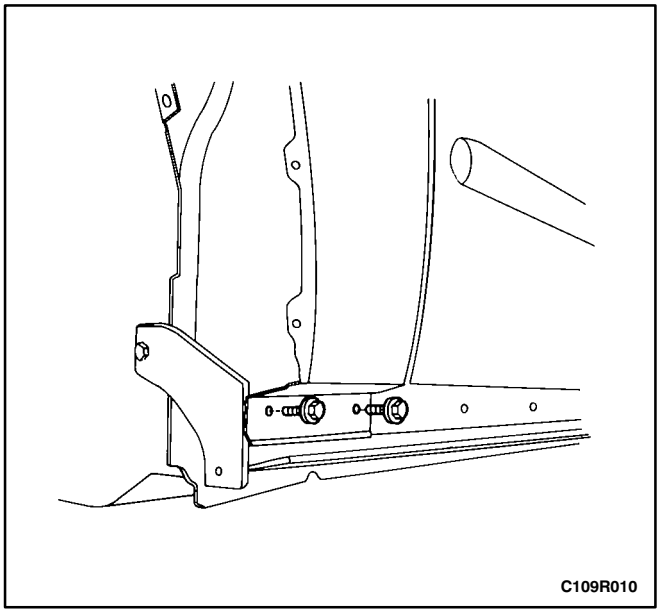

6. Remove the rocker panel molding. Refer to *Section 9M, Exterior Trim.*
7. Remove the bolts at the base of the fender.

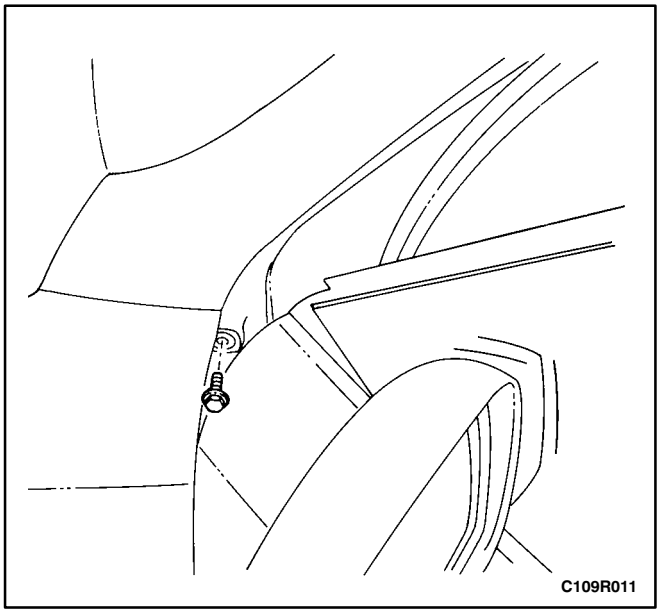

8. Remove the side turn signal lamp. Refer to *Section 9B, Lighting Systems.*
9. Open the front door and remove the bolt at the base of the A-pillar.

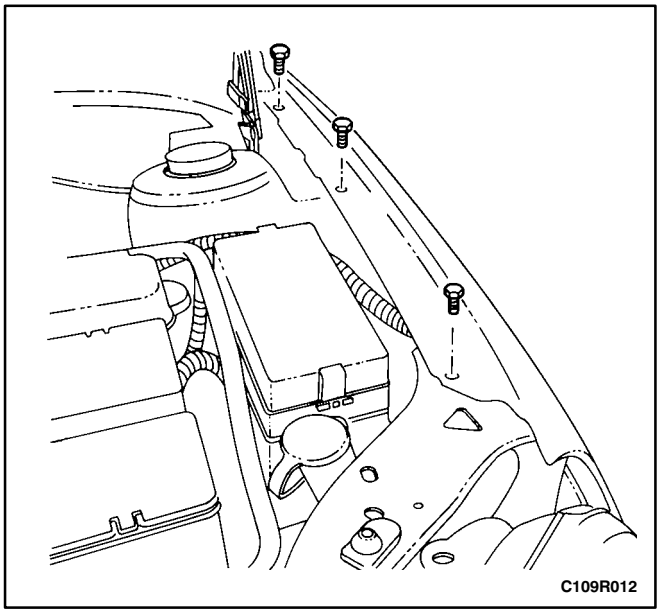

10. Reposition the cowl vent grille weatherstrip.
11. Remove the upper fender bolts and the fender.

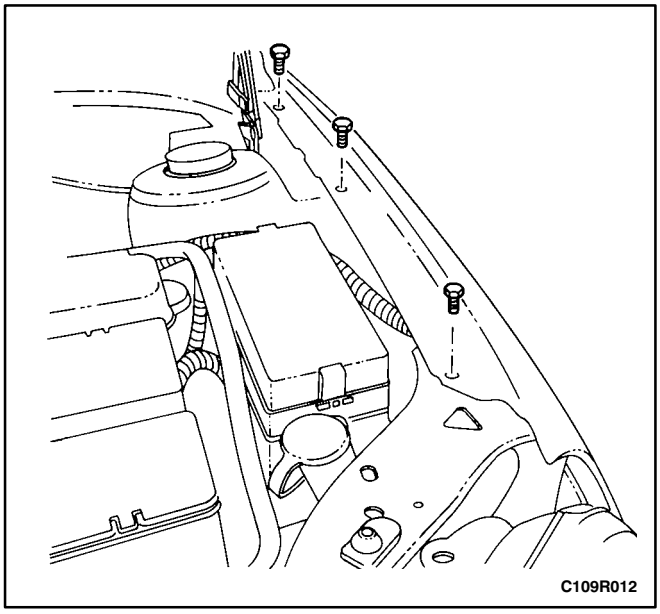

Installation Procedure

Notice: Dissimilar metals in direct contact with each other may corrode rapidly. Make sure to use the correct fasteners to prevent premature corrosion.

1. Install the fender with the upper fender bolts.

   Tighten

   Tighten the upper fender bolts to 10 N•m (89 lb-in).

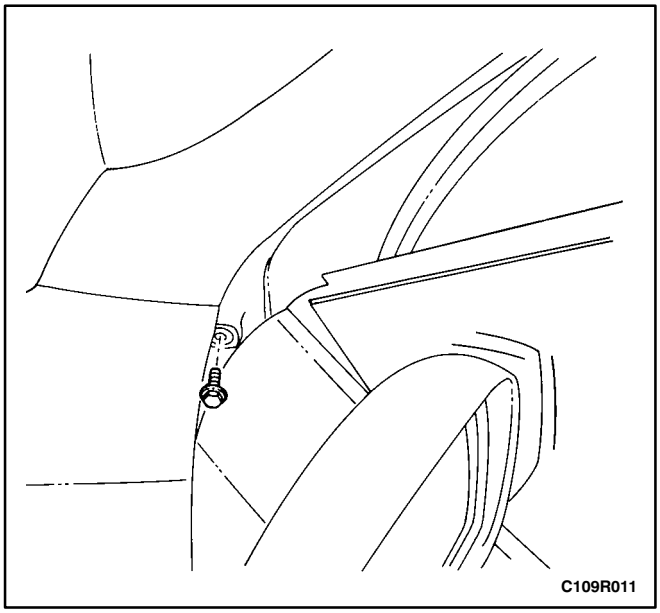

2. Reposition the cowl vent grille weatherstrip to its original position.
3. Install the bolt at the base of the A-pillar.

   Tighten

   Tighten the A-pillar fender bolt to 10 N•m (89 lb-in).

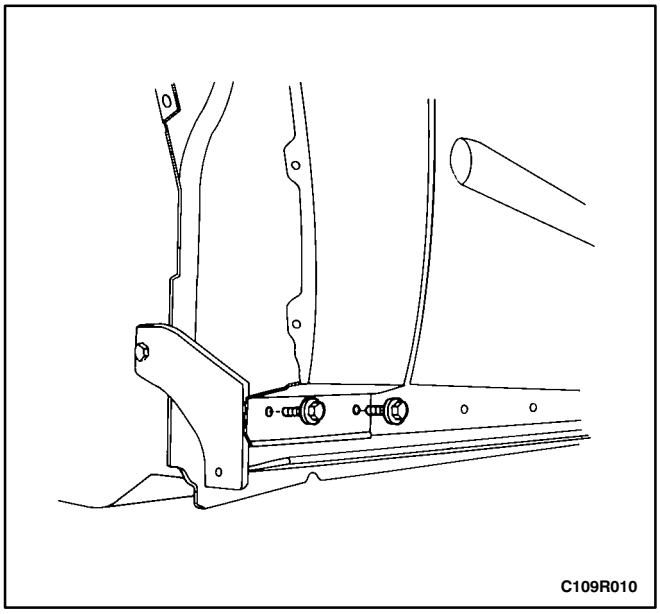

4. Install the side turn signal lamp. Refer to *Section 9B, Lighting Systems.*
5. Install the bolts at the base of the fender.

Tighten

Tighten the lower fender bolts to 10 N•m (89 lb-in).

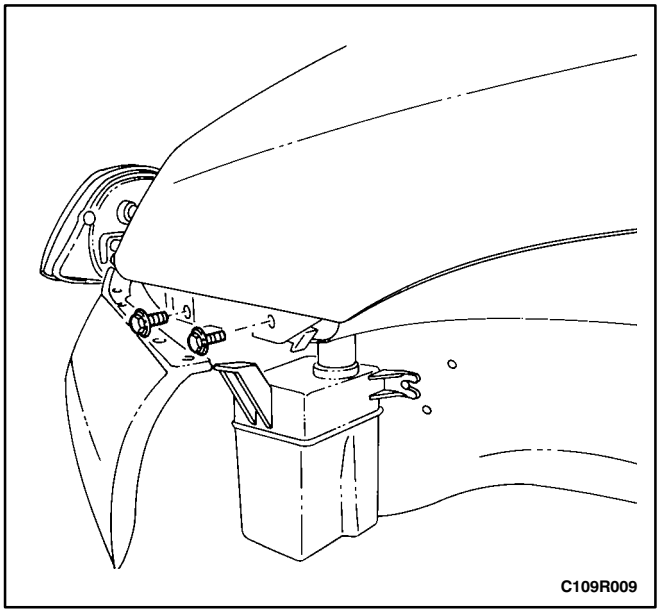

6. Install the rocker panel molding. Refer to *Section 9M, Exterior Trim.*
7. Install the front fender bolts behind the front fascia.

Tighten

Tighten the front fender bolts to 10 N•m (89 lb-in).

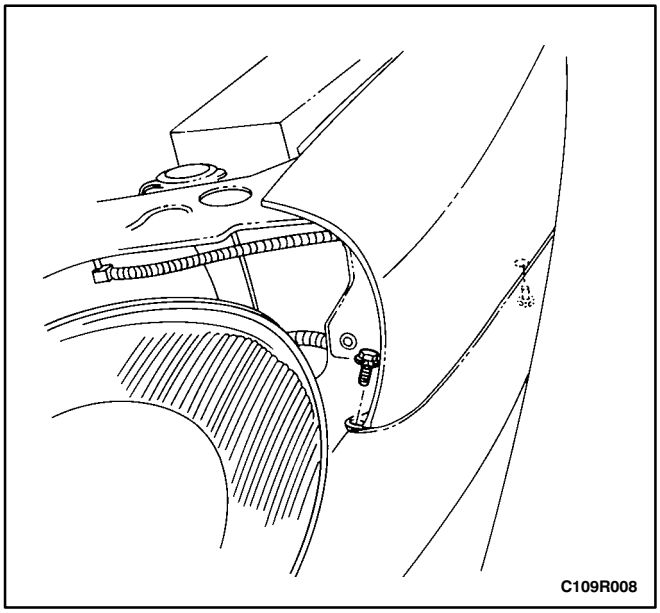

8. Install the front fascia to its original position.
9. Install the bolts securing the front fascia to the fender.

Tighten

Tighten the front fascia-to-fender bolts to 2.5 N•m (22 lb-in).

10. Install the front headlamp to its original position.
11. Install the front wheel well splash shield. Refer to “Front Wheel Well Splash Shield” in this section.

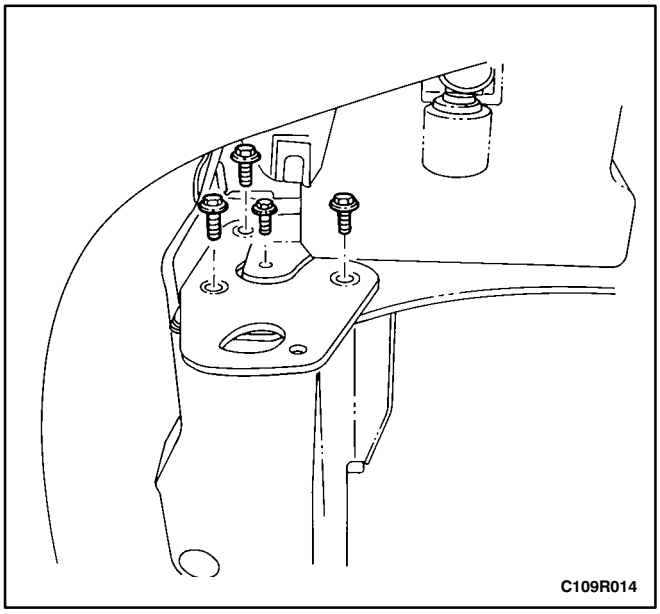

TIE DOWN HOOKS

Removal Procedure

1. Reposition the front portion of the front wheel well splash shield.
2. Remove the front washer reservoir bolt (driver side art), and the resornator bolt (passenger side).
3. Remove the bolts and the tie down hoods.

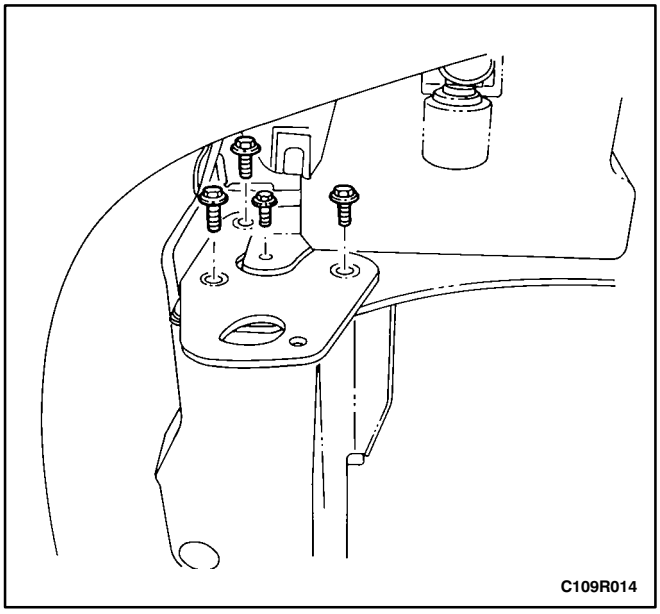

Installation Procedure

Notice: Dissimilar metals in direct contact with each other may corrode rapidly. Make sure to use the correct fasteners to prevent premature corrosion.

1. Install the tie down hook with the bolts.

   Tighten

   Tighten the tie down hook bolts to 25 N•m (18 lb-ft).
2. Install the front washer reservoir bolt (driver side art).

   Tighten

   Tighten the washer reservoir bolt to 9 N•m (80 lb-in).
3. Install the resornator bolt (passenger side).

   Tighten

   Tighten the resornator bolt to 9 N•m (80 lb-in).
4. Install the front wheel well splash shield to its original position.

GENERAL DESCRIPTION AND SYSTEM OPERATION

BODY FRONT END

This vehicle has a unitized body with a frame assembly supporting the engine and the transaxle. The fender panels and the radiator support are also integral parts of the body.

SECTION 9S

BODY REAR END

CAUTION: Disconnect the negative battery cable before removing or installing any electrical unit or when a tool or equipment could easily come in contact with exposed electrical terminals. Disconnecting this cable will help prevent personal injury and damage to the vehicle. The ignition must also be in LOCK unless otherwise noted.

TABLE OF CONTENTS

Specifications 9S-1
Fastener Tightening Specifications 9S-1
Maintenance and Repair 9S-2
On-Vehicle Service 9S-2
Fuel Filler Door 9S-2
Rear Deck Lid 9S-2
Rear Deck Lid Torque Rods 9S-3
Luggage Compartment Lock Cylinder 9S-4
Luggage Compartment Lock Striker 9S-4
Luggage Compartment Lock 9S-5
Weatherstrip 9S-6
Rear Deck Lid Remote Handle and Cable 9S-6
Fuel Filler Door Remote Handle and Cable 9S-8
Tiedown Hook 9S-10
Fire Extinguisher and Bracket 9S-11
General Description and System Operation 9S-12
Fuel Filler Door 9S-12
Rear Deck Lid 9S-12

SPECIFICATIONS

FASTENER TIGHTENING SPECIFICATIONS

Application	N•m	Lb-Ft	Lb-In
Fuel Filler Door Screws	4	–	35
Fuel Filler Door/Rear Deck Lid Remote Cable Handle Cover Screw	3	–	27
Fuel Filler Door/Rear Deck Lid Remote Cable Handle Screws	8	–	71
Lower B-Pillar Seat Belt Anchor Bolt	37	27	–
Luggage Compartment Lock Cylinder Nuts	1.5	–	13
Luggage Compartment Lock Screws	6	–	53
Luggage Compartment Lock Striker Bolts	8	–	71
Rear Deck Lid Bolts	10	–	89
Towing Eye Bolts	25	18	–

MAINTENANCE AND REPAIR

ON-VEHICLE SERVICE

FUEL FILLER DOOR

Removal Procedure

1. Remove the screws and the fuel filler door.

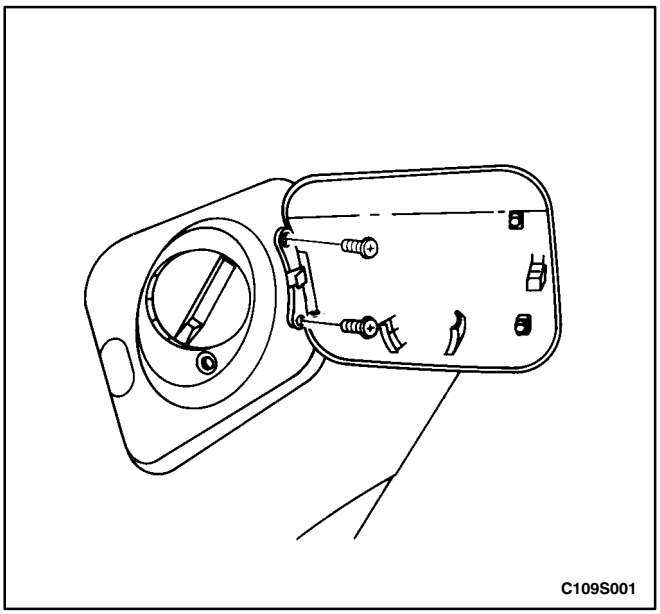

Installation Procedure

Notice: Dissimilar metals in direct contact with each other may corrode rapidly. Make sure to use the correct fasteners to prevent premature corrosion.

1. Install the fuel filler door with the screws.

   Tighten

   Tighten the fuel filler door screws to 4 N•m (35 lb-in).

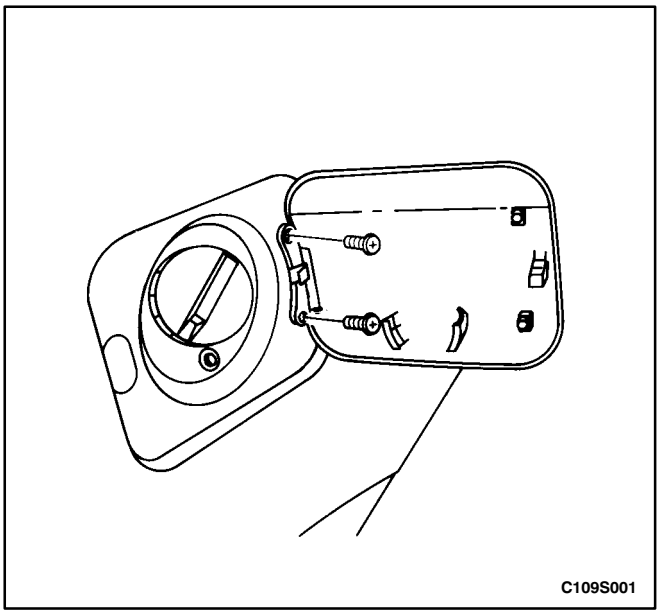

REAR DECK LID

Removal Procedure

1. Disconnect the negative battery cable.
2. Disconnect the electrical connector.
3. Remove the electrical harness from the rear deck lid hinge arm.
4. Remove the bolts and the rear deck lid.

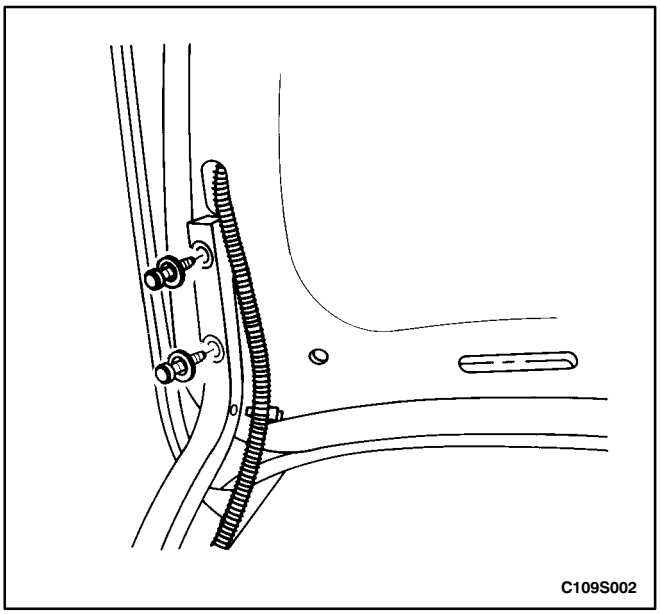

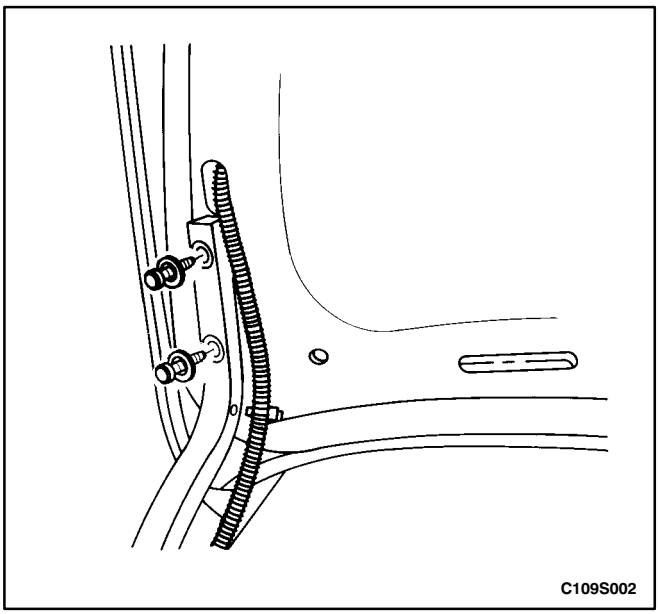

Installation Procedure

Notice: Dissimilar metals in direct contact with each other may corrode rapidly. Make sure to use the correct fasteners to prevent premature corrosion.

1. Install the rear deck lid with the bolts.

   Tighten

   Tighten the rear deck lid bolts to 10 N•m (89 lb-in).
2. Install the electrical harness to the rear deck lid hinge arm.
3. Connect the electrical connector.
4. Connect the negative battery cable.

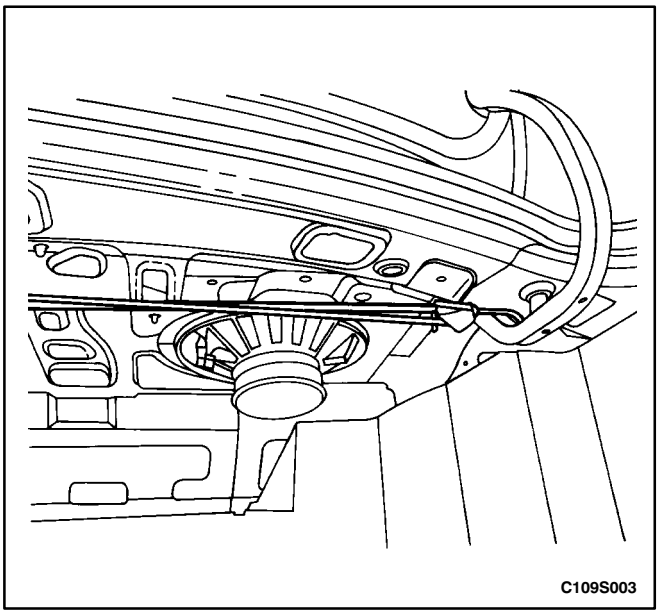

REAR DECK LID TORQUE RODS

Removal Procedure

1. Raise and support the deck lid in the open position.
2. Pull the torque rods out of the rear mount.
3. Remove the torque rods from the hinge.

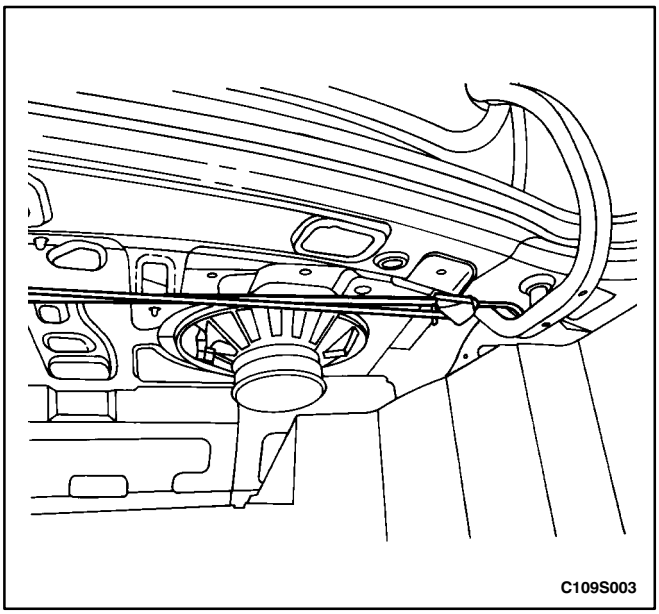

Installation Procedure

1. Install the torque rods into the hinge mount.
2. Extend the torque rods to mount them in the rear mounting hole.

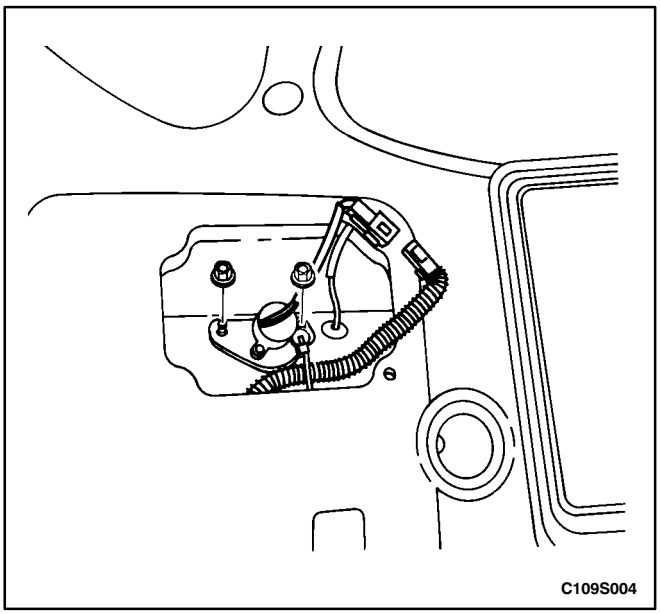

LUGGAGE COMPARTMENT LOCK CYLINDER

Removal Procedure

1. Remove the nuts securing the lock cylinder.
2. Disconnect the lock rod.
3. Disconnect the electrical connector.
4. Remove the luggage compartment lock cylinder.

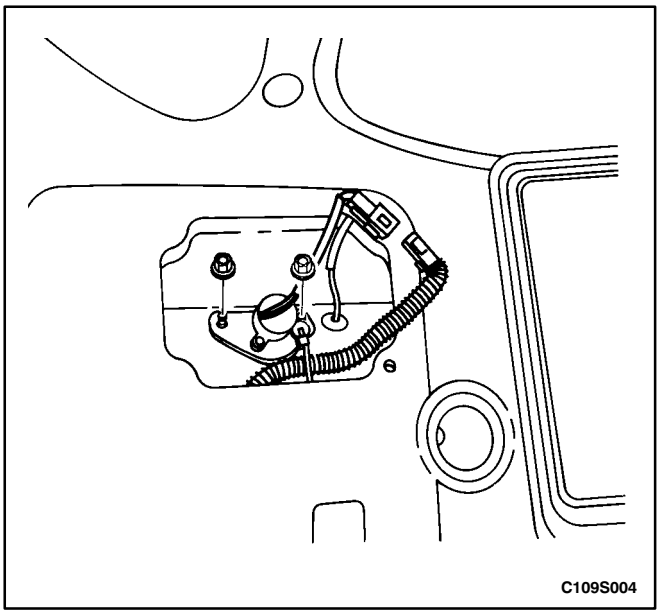

Installation Procedure

1. Install the luggage compartment lock cylinder.
2. Connect the electrical connector.
3. Connect the lock rod.

Notice: Dissimilar metals in direct contact with each other may corrode rapidly. Make sure to use the correct fasteners to prevent premature corrosion.

4. Secure the luggage compartment lock cylinder with the nuts.

   Tighten

   Tighten the luggage compartment lock cylinder nuts to 1.5 N•m (13 lb-in).

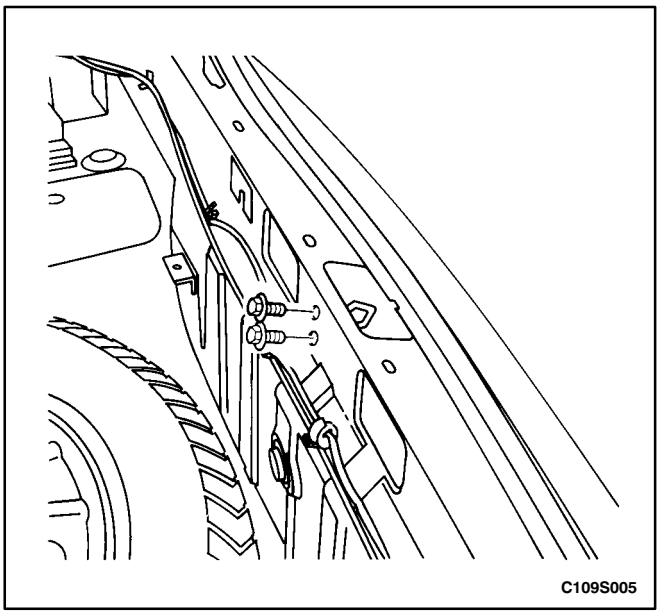

LUGGAGE COMPARTMENT LOCK STRIKER

Removal Procedure

1. Open the luggage compartment.
2. Remove the luggage compartment rear trim panel. Refer to *Section 9G, Interior Trim.*
3. Remove the bolts securing the lock striker.
4. Pull the lock striker out.
5. Disconnect the lock release cable from the lock striker.

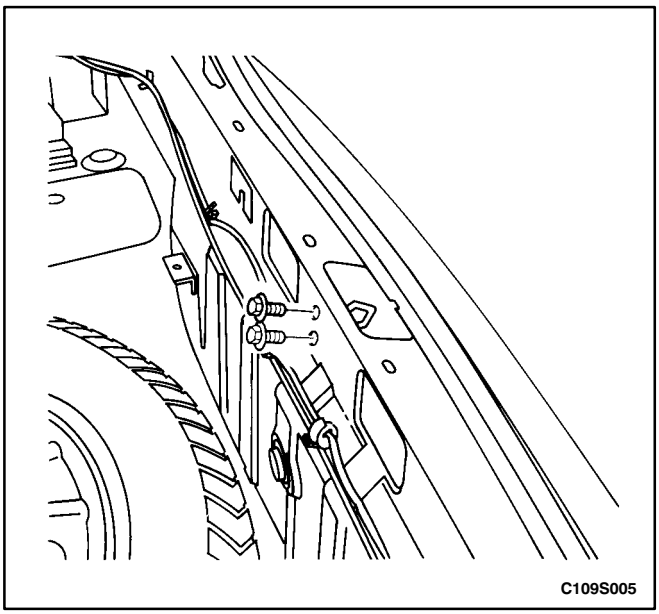

Installation Procedure

1. Connect the lock release cable.

Notice: Dissimilar metals in direct contact with each other may corrode rapidly. Make sure to use the correct fasteners to prevent premature corrosion.

2. Install the lock striker with the bolts.

   Tighten

   Tighten the luggage compartment lock striker bolts to 8 N•m (71 lb-in).

3. Install the luggage compartment rear trim panel. Refer to *Section 9G, Interior Trim.*

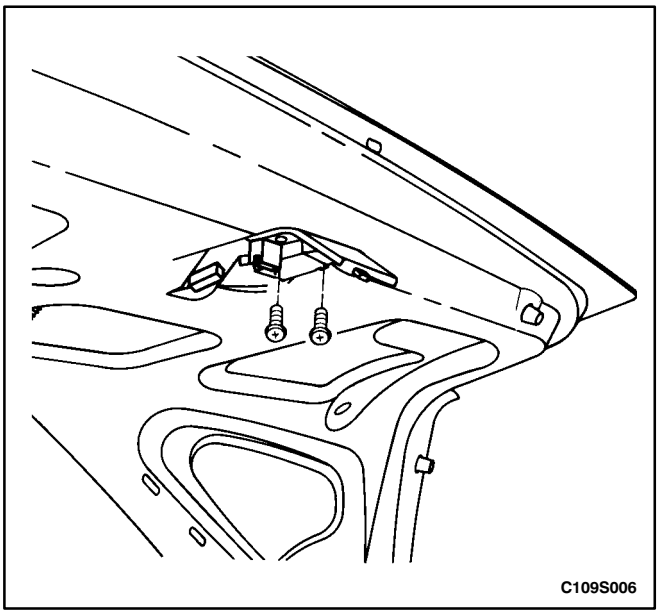

LUGGAGE COMPARTMENT LOCK

Removal Procedure

1. Disconnect the negative battery cable.
2. Remove the cover.
3. Disconnect the electrical connector.
4. Remove the screws and the luggage compartment lock.
5. Disconnect the lock rod.

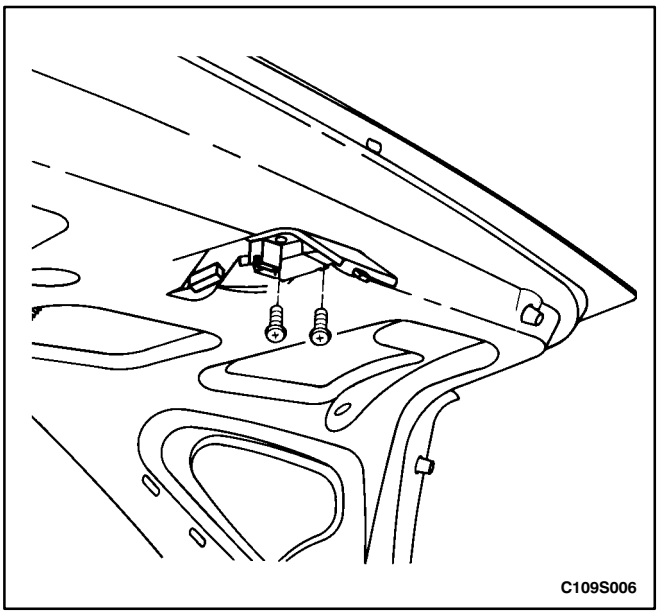

Installation Procedure

1. Connect the lock rod.

Notice: Dissimilar metals in direct contact with each other may corrode rapidly. Make sure to use the correct fasteners to prevent premature corrosion.

2. Install the luggage compartment lock with the screws.

   Tighten

   Tighten the luggage compartment lock screws to 6 N•m (53 lb-in).

3. Connect the electrical connector.
4. Install the cover.
5. Connect the negative battery cable.

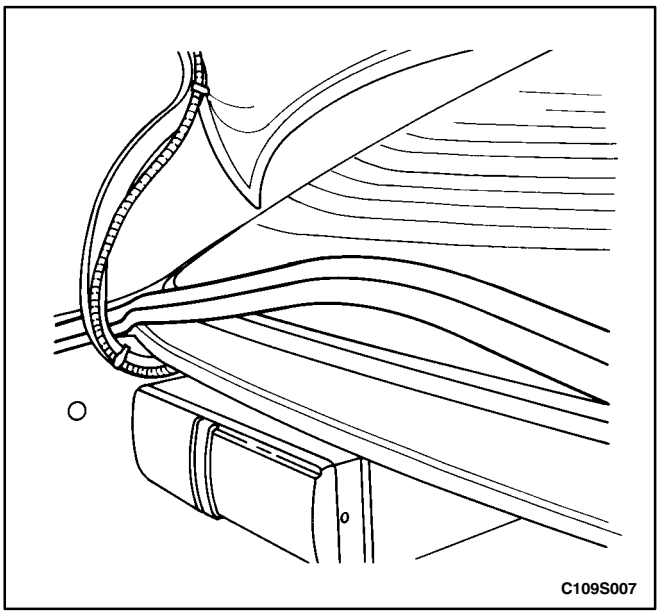

WEATHERSTRIP

Removal Procedure

1. Open the luggage compartment lid.
2. Remove the weatherstrip from around the gutter.

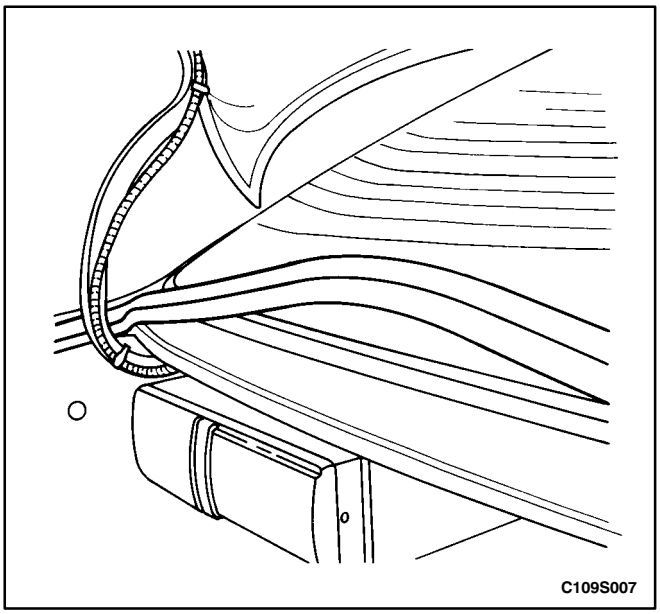

Installation Procedure

1. Install the weatherstrip onto the gutter flange.
2. Inspect the weatherstrip. Make sure that the clinch is completely seated onto the flange.
3. Using a water hose without a nozzle, test the rear deck lid to make sure that no leaks are present.
   - If there are no leaks present, no further repair is required.
   - If leaks are present, continue with the remainder of the installation procedure.
4. Remove the weatherstrip.
5. Install the new weatherstrip onto the gutter flange.

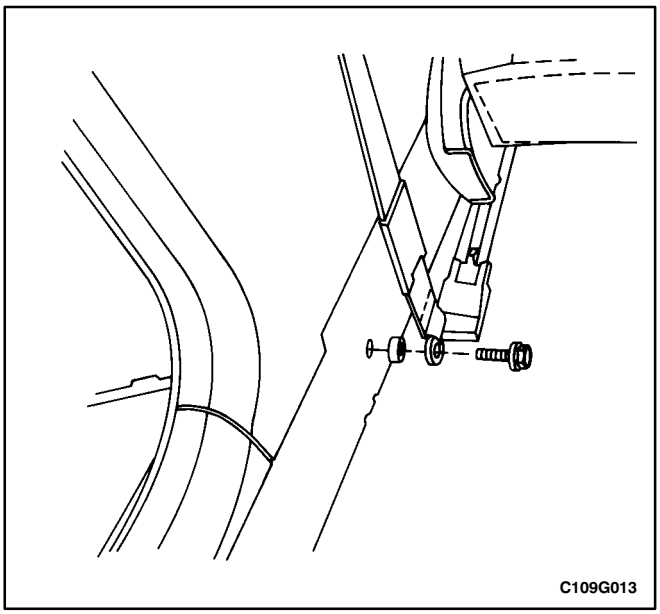

REAR DECK LID REMOTE HANDLE AND CABLE

(Left–Hand Drive Shown, Right–Hand Drive Similar)

Removal Procedure

1. Open the luggage compartment.
2. Remove the luggage compartment left side wheelhouse trim panel and the luggage compartment rear trim panel. Refer to *Section 9G, Interior Trim*.
3. Remove the lock striker. Refer to “Luggage Compartment Lock Striker” in this section.
4. Remove the lower B-pillar seat belt bolt and the anchor.

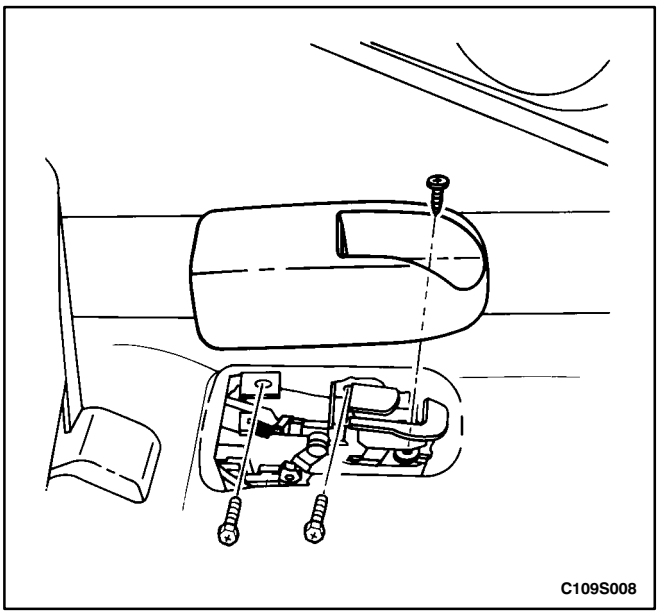

5. Remove the screw and the fuel filler door/rear deck lid remote cable handle cover.
6. Remove the screws and the fuel filler door/rear deck lid remote cable handle.
7. Disconnect the cable from the handle.
8. Remove the driver's seat and the rear seats. Refer to *Section 9H, Seats*.
9. Remove the left side front and rear rocker panels, the left side kick panel, and the left side lower B-pillar trim panel. Refer to *Section 9G, Interior Trim.*
10. Reposition the floor carpet on the left side of the vehicle.
11. Remove the cable.

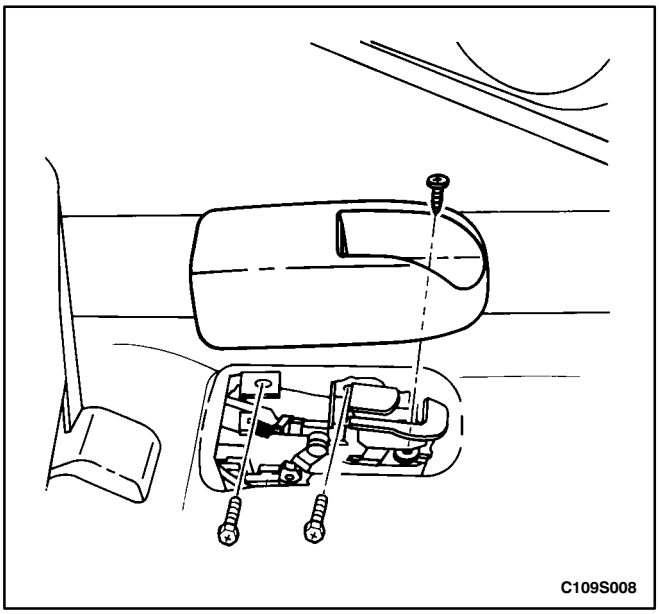

Installation Procedure

1. Feed the cable from the luggage compartment to the passenger compartment.
2. Install the floor carpet to its original position.
3. Install the left side front and rear rocker panels, the left side kick panel, and the left side lower B-pillar trim panel. Refer to *Section 9G, Interior Trim.*
4. Install the driver's seat and the rear seats. Refer to *Section 9H, Seats*.
5. Connect the cable to the handle.

Notice: Dissimilar metals in direct contact with each other may corrode rapidly. Make sure to use the correct fasteners to prevent premature corrosion.

6. Install the fuel filler door/rear deck lid remote cable handle with the screws.

Tighten

Tighten the fuel filler door/rear deck lid remote cable handle screws to 8 N•m (71 lb-in).

Notice: Dissimilar metals in direct contact with each other may corrode rapidly. Make sure to use the correct fasteners to prevent premature corrosion.

7. Install the fuel filler door/rear deck lid remote cable handle cover with the screw.

Tighten

Tighten the fuel filler door/rear deck lid remote cable handle cover screw to 3 N•m (27 lb-in).

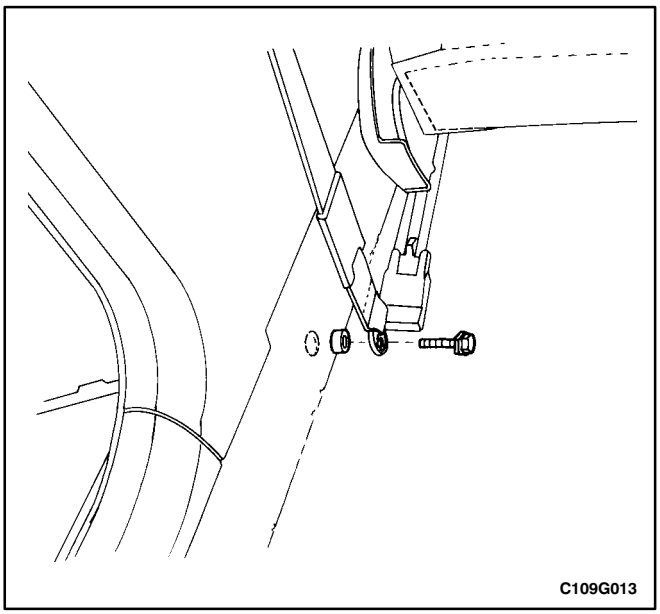

8. Install the lower B-pillar seat belt anchor with the bolt.

Tighten

Tighten the lower B-pillar seat belt bolt to 37 N•m (27 lb-ft).

9. Install the lock striker. Refer to “Luggage Compartment Lock Striker” in this section.
10. Install the luggage compartment left side wheelhouse trim panels and the luggage compartment rear trim panel. Refer to *Section 9G, Interior Trim*.
11. Close the luggage compartment.

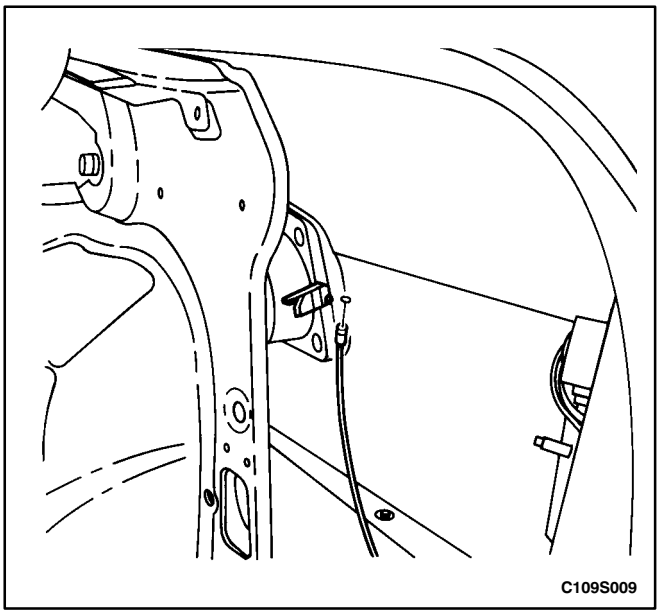

FUEL FILLER DOOR REMOTE HANDLE AND CABLE

(Left–Hand Drive Shown, Right–Hand Drive Similar)

Removal Procedure

1. Open the luggage compartment.
2. Remove the luggage compartment wheelhouse trim panels and the luggage compartment rear trim panel. Refer to *Section 9G, Interior Trim*.
3. Disconnect the cable from the fuel filler door.

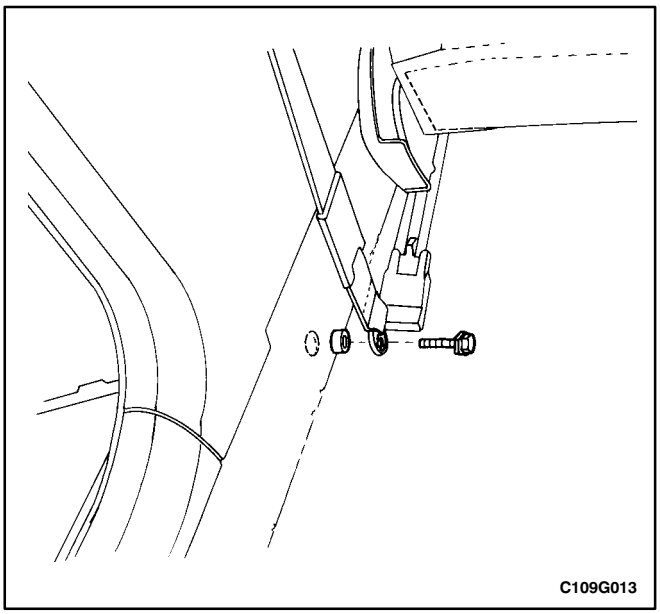

4. Remove the lower B-pillar seat belt bolt and the anchor.

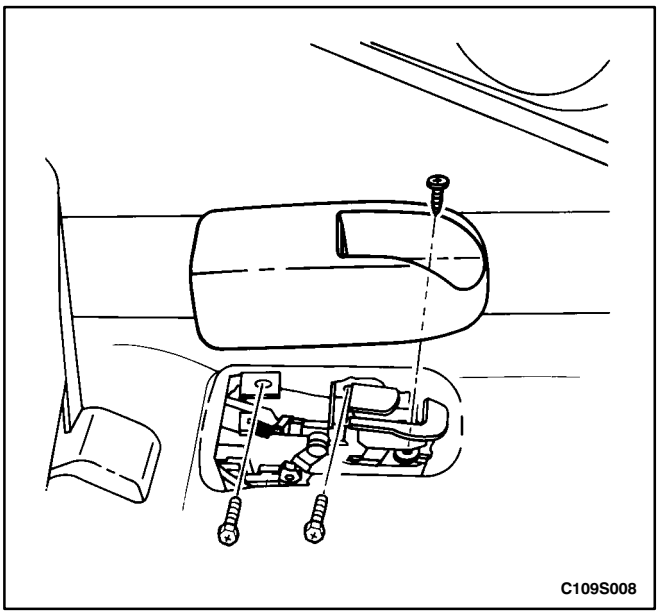

5. Remove the screw and the fuel filler door/rear deck lid remote cable handle cover.
6. Remove the screws and the fuel filler door/rear deck lid remote cable handle.
7. Disconnect the cable from the handle.
8. Remove the driver's seat and the rear seats. Refer to *Section 9H, Seats*.
9. Remove the left side front and rear rocker panels, the left side kick panel, and the left side lower B-pillar trim panel. Refer to *Section 9G, Interior Trim.*
10. Reposition the floor carpet on the left side of the vehicle.
11. Remove the cable.

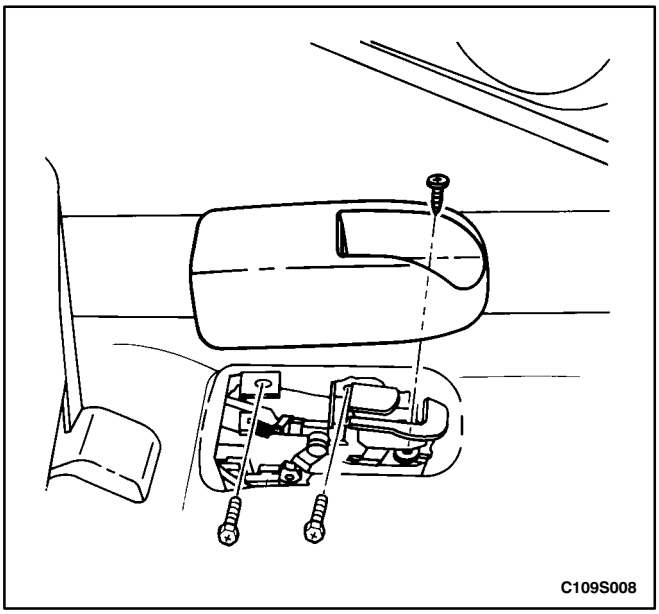

Installation Procedure

1. Feed the cable from the luggage compartment to the passenger compartment.
2. Install the floor carpet to its original position.
3. Install the left side front and rear rocker panels, the left side kick panel, and the left side lower B-pillar trim panel. Refer to *Section 9G, Interior Trim.*
4. Install the driver's seat and the rear seats. Refer to *Section 9H, Seats*.
5. Connect the cable to the handle.

Notice: Dissimilar metals in direct contact with each other may corrode rapidly. Make sure to use the correct fasteners to prevent premature corrosion.

6. Install the fuel filler door/rear deck lid remote cable handle with the screws.

Tighten

Tighten the fuel filler door/rear deck lid remote cable handle screws to 8 N•m (71 lb-in).

Notice: Dissimilar metals in direct contact with each other may corrode rapidly. Make sure to use the correct fasteners to prevent premature corrosion.

7. Install the fuel filler door/rear deck lid remote cable handle cover with the screw.

Tighten

Tighten the fuel filler door/rear deck lid remote cable handle cover screw to 3 N•m (27 lb-in).

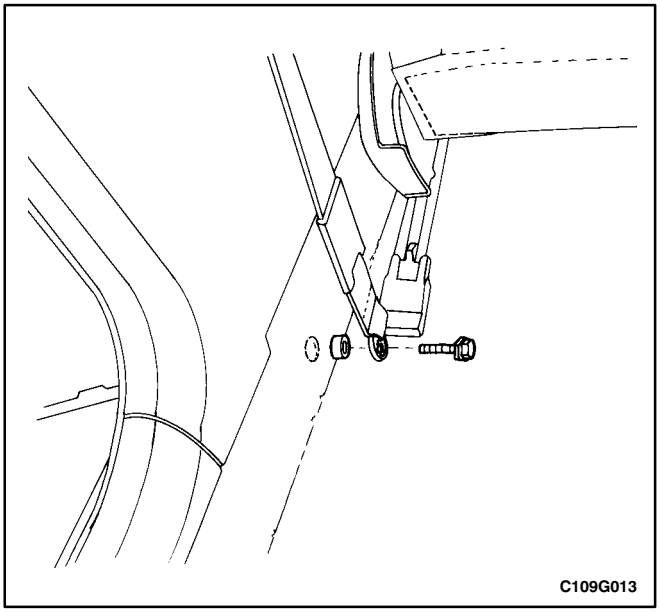

8. Install the lower B-pillar seat belt anchor with the bolt.

Tighten

Tighten the lower B-pillar seat belt anchor bolt to 37 N•m (27 lb-ft).

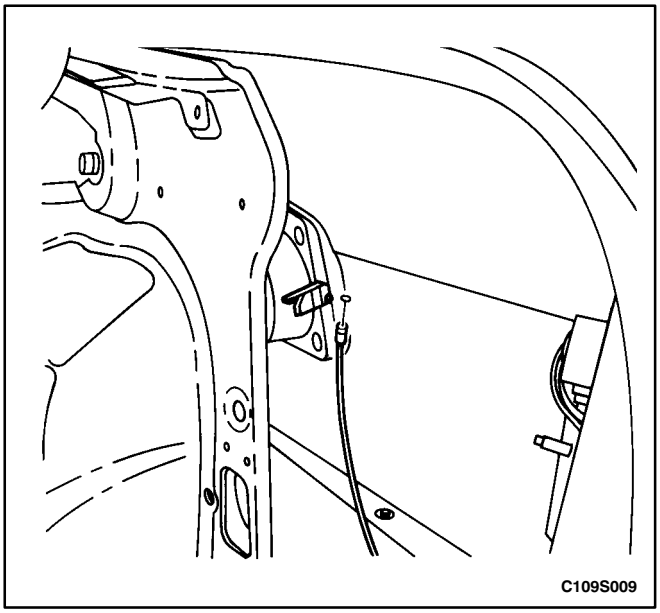

9. Connect the cable to the fuel filler door.
10. Install the luggage compartment wheelhouse trim panels and the luggage compartment rear trim panel. Refer to *Section 9G, Interior Trim*.
11. Close the luggage compartment.

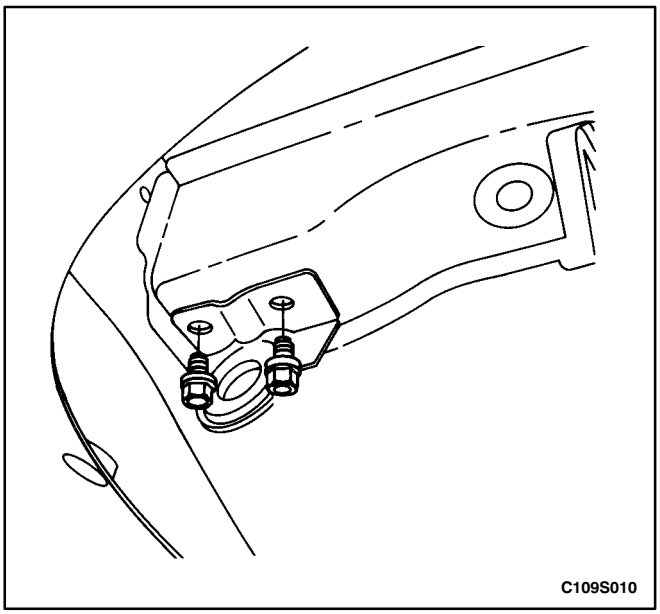

TIE DOWN HOOK

Removal Procedure

1. Remove the bolts and the tie down hook.

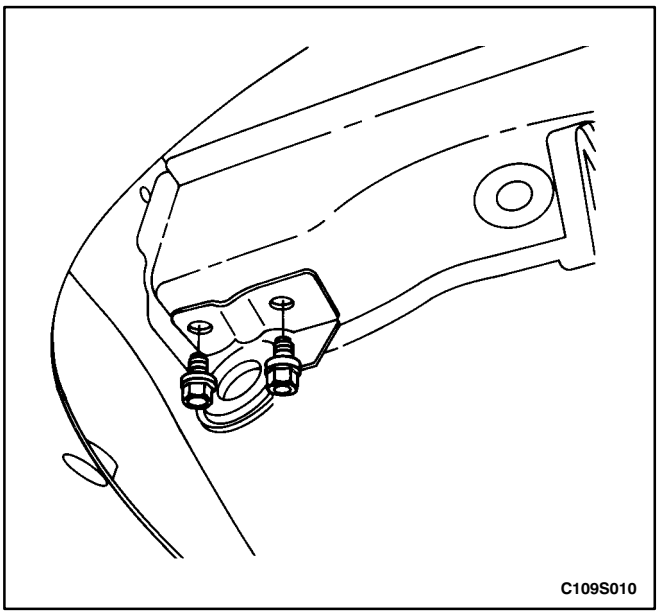

Installation Procedure

Notice: Dissimilar metals in direct contact with each other may corrode rapidly. Make sure to use the correct fasteners to prevent premature corrosion.

1. Install the tie down hook with the bolts.

   Tighten

   Tighten the tie down hook bolts to 25 N•m (18 lb-ft).

FIRE EXTINGUISHER AND BRACKET

The fire extinguisher is located on the right side of the luggage compartment or underneath the front passenger seat.

Removal Procedure

1. Remove the fire extinguisher.
2. Remove the bolts and the bracket.

Installation Procedure

1. Install the bracket with the bolts.
2. Install the fire extinguisher.

GENERAL DESCRIPTION AND SYSTEM OPERATION

FUEL FILLER DOOR

The fuel filler door attaches to the fuel tank pocket on the right side of the vehicle. The door is opened by pulling on the fuel filler door remote handle located on the floor in front of the driver's seat.

REAR DECK LID

The rear deck lid consists of an inner and outer panel that is hemmed around the perimeter and bonded together with structural adhesive. The deck lid torque rods assist in the opening of the rear deck lid and hold it in the open position.

SECTION 9T

REMOTE KEYLESS ENTRY AND ANTI-THEFT SYSTEM

REMOTE KEYLESS ENTRY AND PERIMETER/ULTRASONIC ANTI-THEFT SYSTEM

TABLE OF CONTENTS

Specifications 9T-1
Fastener Tightening Specifications 9T-1
Special Tools 9T-2
Special Tools Table 9T-2
Schematic and Routing Diagrams 9T-3
Remote Keyless Entry and Perimeter/ Ultrasonic Anti-Theft System 9T-3
Module/Receiver Connector 9T-4
Wiring Harness Connectors 9T-4
Maintenance and Repair 9T-5
On-Vehicle Service 9T-5
Module/Receiver 9T-5
Siren 9T-5
Front Door Tamper and Door Contact Switches 9T-7
Rear Deck Lid Tamper Switch 9T-7
Rear Deck Lid Open Switch 9T-7
Hood Open Switch 9T-8
Ultrasonic Sensor 9T-8
Password Programming 9T-9
General Description and System Operation 9T-10
Remote Keyless Entry and Perimeter/ Ultrasonic Anti-Theft System 9T-10
Remote Locking and Unlocking 9T-10
Security Indicator 9T-10
Intrusion Sensing 9T-10
Siren 9T-10
Vehicle Locator 9T-11
Automatic Locking (Safety Lock) 9T-11
Module/Receiver 9T-11
Fault or Alarm Indication 9T-11

IMMOBILIZER ANTI-THEFT SYSTEM

TABLE OF CONTENTS

Specifications 9T-13
Fastener Tightening Specifications 9T-13
Schematic and Routing Diagrams 9T-14
Immobilizer Anti-Theft System 9T-14
Diagnosis 9T-15
Immobilizer Anti-Theft System 9T-15
DTC 53 ECM Immobilized Error 9T-16
Key Status Errors 9T-17
Communication Between Immobilizer and Test Equipment 9T-18
Maintenance and Repair 9T-19
On-Vehicle Service 9T-19
Key Coding Procedure 9T-19
Identification Code Reprogramming 9T-19
Ignition Key Transponder 9T-20
Detection Coil 9T-20
Immobilizer Control Unit 9T-22
General Description and System Operation 9T-24
Immobilizer System 9T-24
Electronically Coded Keys 9T-24
Detection Coil 9T-24
Immobilizer Control Unit 9T-24
Serial Data Link 9T-25
Electronic Control Module (ECM) 9T-25

BLANK

SECTION 9T

REMOTE KEYLESS ENTRY AND ANTI-THEFT SYSTEM

CAUTION: Disconnect the negative battery cable before removing or installing any electrical unit or when a tool or equipment could easily come in contact with exposed electrical terminals. Disconnecting this cable will help prevent personal injury and damage to the vehicle. The ignition must also be in LOCK unless otherwise noted.

TABLE OF CONTENTS

Specifications 9T-1
Fastener Tightening Specifications 9T-1
Special Tools 9T-2
Special Tools Table 9T-2
Schematic and Routing Diagrams 9T-3
Remote Keyless Entry and Perimeter/ Ultrasonic Anti-Theft System 9T-3
Module/Receiver Connector 9T-4
Wiring Harness Connectors 9T-4
Maintenance and Repair 9T-5
On-Vehicle Service 9T-5
Module/Receiver 9T-5
Siren 9T-5
Front Door Tamper and Door Contact Switches 9T-7
Rear Deck Lid Tamper Switch 9T-7
Rear Deck Lid Open Switch 9T-7
Hood Open Switch 9T-8
Ultrasonic Sensor 9T-8
Password Programming 9T-9
General Description and System Operation 9T-10
Remote Keyless Entry and Perimeter/ Ultrasonic Anti-Theft System 9T-10
Remote Locking and Unlocking 9T-10
Security Indicator 9T-10
Intrusion Sensing 9T-10
Siren 9T-10
Vehicle Locator 9T-11
Automatic Locking (Safety Lock) 9T-11
Module/Receiver 9T-11
Fault or Alarm Indication 9T-11

SPECIFICATIONS

FASTENER TIGHTENING SPECIFICATIONS

Application	N•m	Lb-Ft	Lb-In
Hood Open Switch Mounting Bolt	4	–	35
Siren Bracket Mounting Bolt	11	–	97
Siren Mounting Screws	3	–	27

SPECIAL TOOLS

SPECIAL TOOLS TABLE

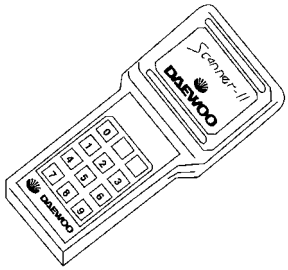 A110B003	**Scan Tool**

SCHEMATIC AND ROUTING DIAGRAMS

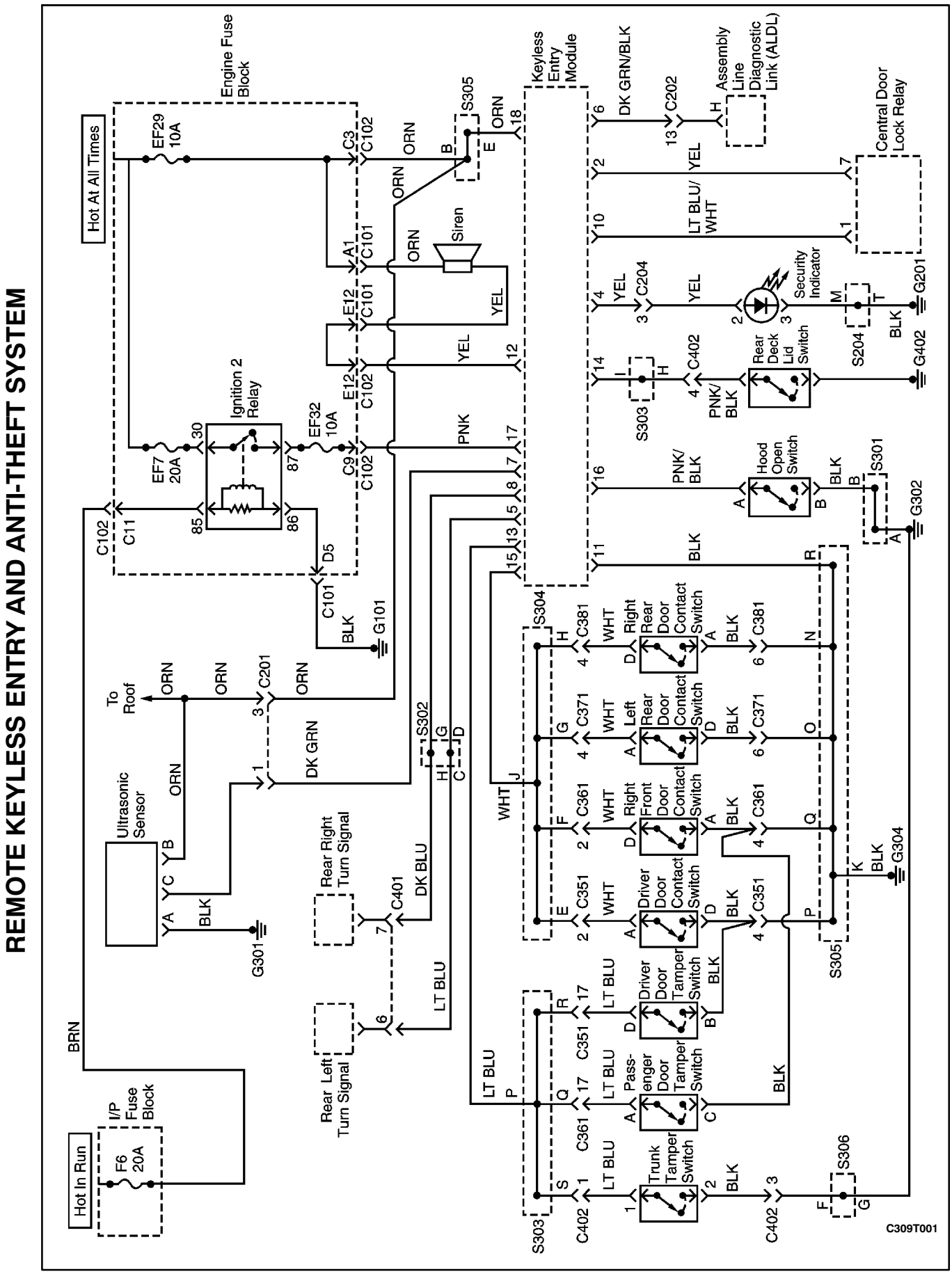

MODULE/RECEIVER CONNECTOR

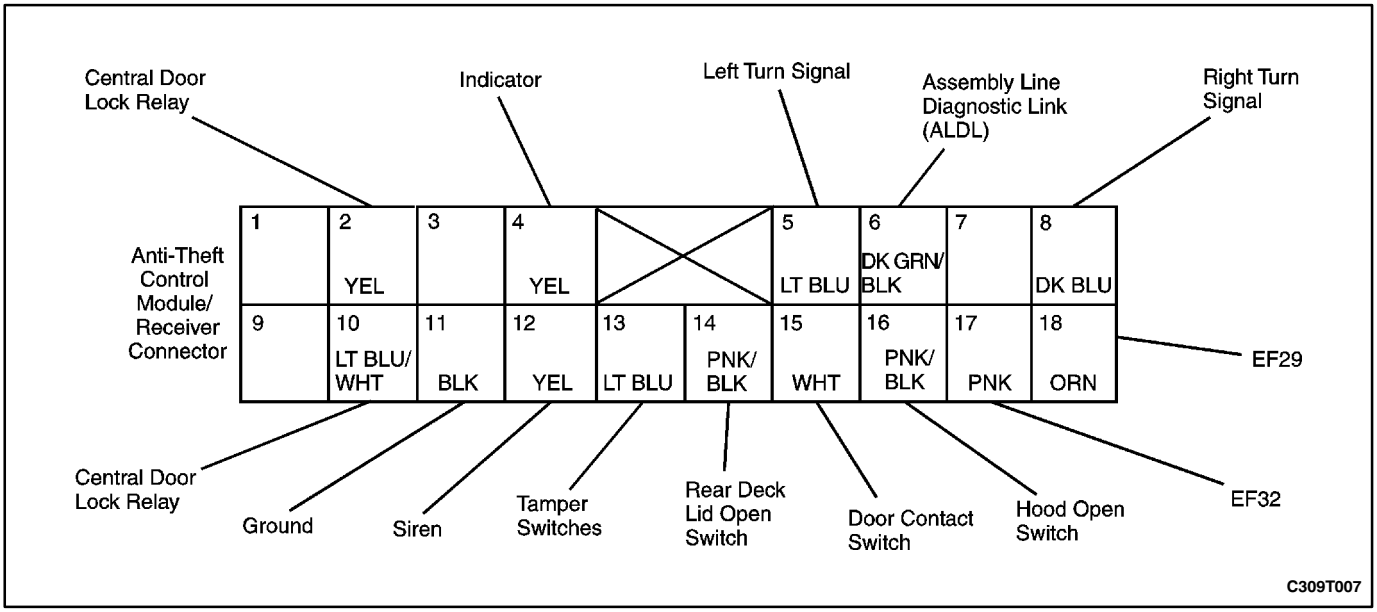

WIRING HARNESS CONNECTORS

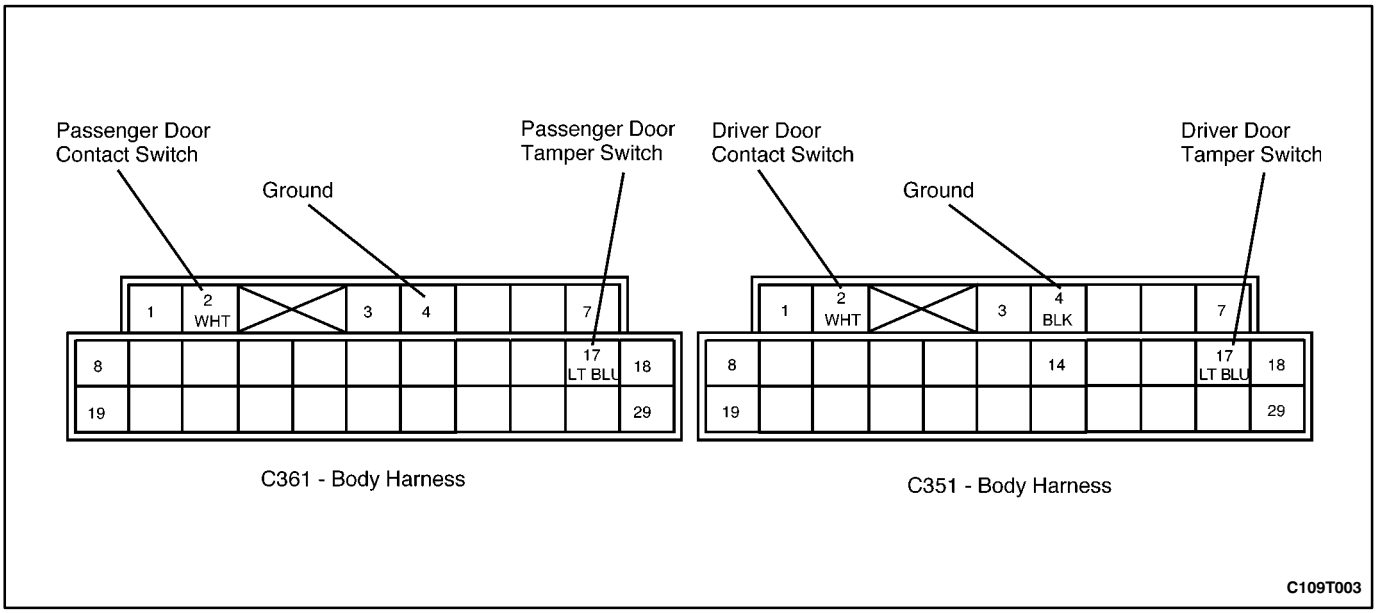

MAINTENANCE AND REPAIR

ON-VEHICLE SERVICE

MODULE/RECEIVER

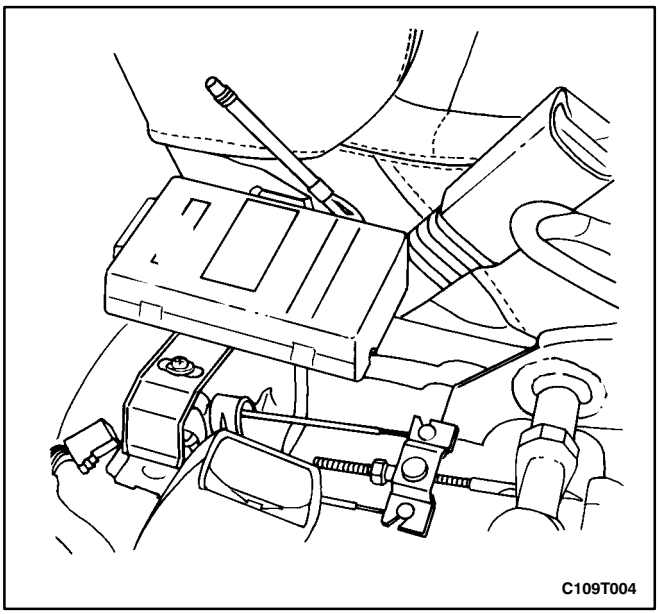

Removal Procedure

1. Disconnect the negative battery cable.
2. Remove the floor console. Refer to *Section 9G, Interior Trim*.
3. Disconnect the module/receiver electrical connector.
4. Remove the module/receiver by sliding it toward the front of the vehicle until it disengages from its mounting bracket.

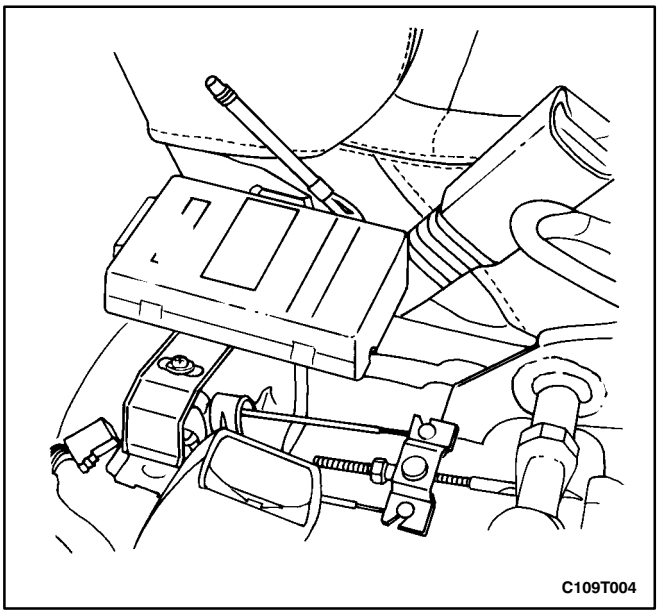

Installation Procedure

1. Install the module/receiver by sliding it on to its mounting bracket and pushing it toward the rear of the vehicle until it is secure.
2. Connect the module/receiver electrical connector.
3. Install the floor console. Refer to *Section 9G, Interior Trim*.
4. Connect the negative battery cable.

SIREN

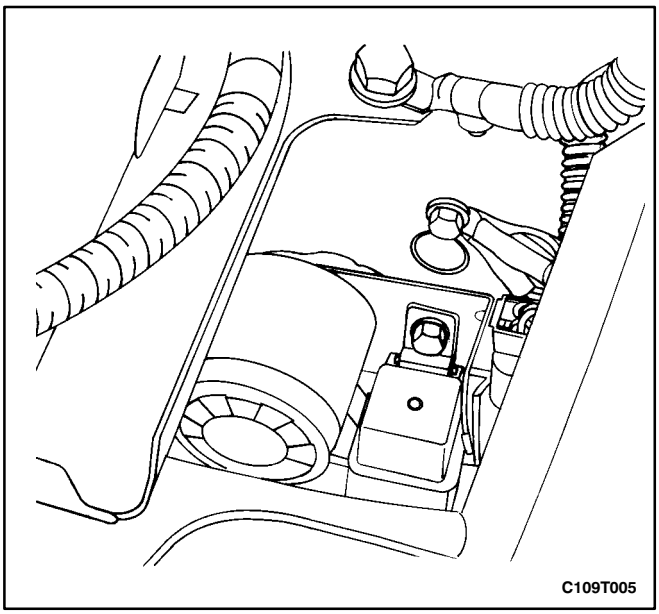

Removal Procedure

1. Disconnect the negative battery cable.
2. Disconnect the siren electrical connector.
3. Remove the siren bracket mounting bolt.

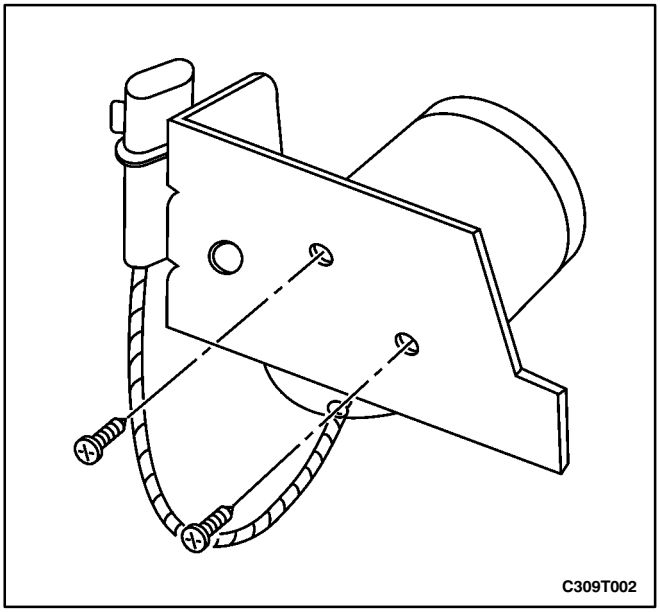

4. Remove the siren bracket.
5. Remove the siren mounting screws.
6. Remove the siren.

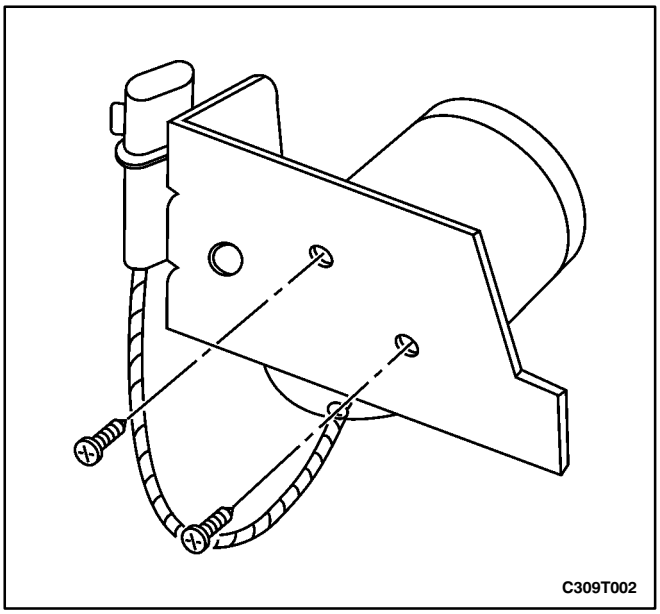

Installation Procedure

1. Install the siren on the siren bracket with the mounting screws.

   Tighten

   Tighten the siren mounting screws to 3 N•m (27 lb-in).

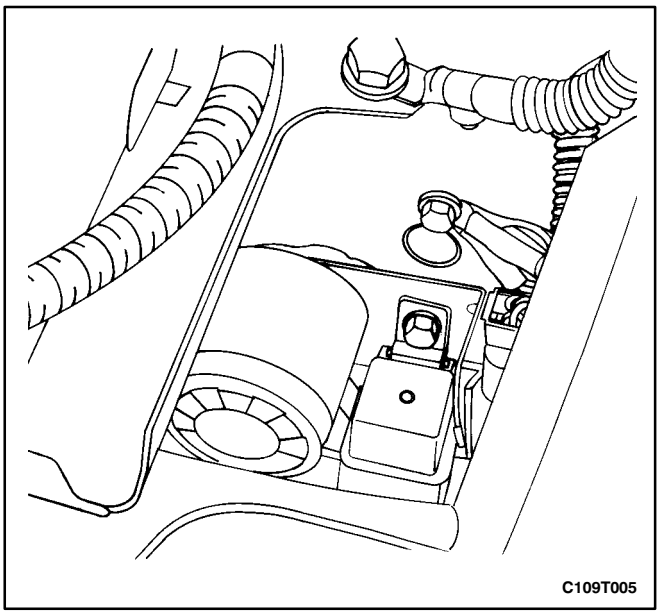

2. Install the siren bracket with the mounting bolt. Make sure that the siren bracket mounting bolt also fastens the auxiliary fan relay.

   Tighten

   Tighten the siren bracket mounting bolt to 11 N•m (97 lb-in).
3. Connect the siren electrical connector.
4. Connect the negative battery cable.

FRONT DOOR TAMPER AND DOOR CONTACT SWITCHES

Removal Procedure

1. Disconnect the negative battery cable.
2. Remove the front door trim panel. Refer to *Section 9G, Interior Trim*.
3. Remove the front door lock with the integral door tamper and door contact switches. Refer to *Section 9P, Doors*.

Installation Procedure

1. Install the front door lock with the integral door tamper and door contact switches. Refer to *Section 9P, Doors*.
2. Install the front door trim panel. Refer to *Section 9G, Interior Trim*.
3. Connect the negative battery cable.

REAR DECK LID TAMPER SWITCH

Removal Procedure

1. Disconnect the negative battery cable.
2. Remove the deck lid lock cylinder and integral rear deck lid tamper switch. Refer to *Section 9S, Body Rear End*.

Installation Procedure

1. Install the deck lid lock cylinder and integral rear deck lid tamper switch. Refer to *Section 9S, Body Rear End*.
2. Connect the negative battery cable.

REAR DECK LID OPEN SWITCH

Removal Procedure

1. Disconnect the negative battery cable.
2. Remove the rear deck lid lock and integral rear deck lid open switch. Refer to *Section 9S, Body Rear End*.

Installation Procedure

1. Install the deck lid lock and integral rear deck lid open switch. Refer to *Section 9S, Body Rear End*.
2. Connect the negative battery cable.

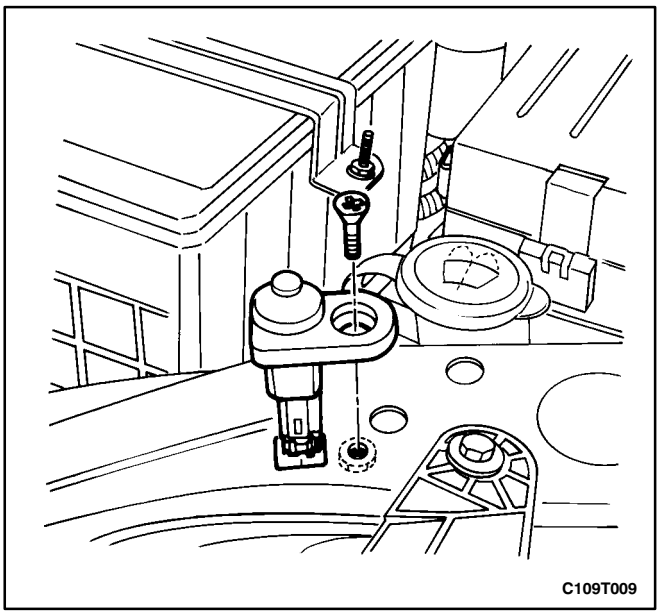

HOOD OPEN SWITCH

Removal Procedure

1. Disconnect the negative battery cable.
2. Reach underneath the hood open switch and hold the mounting nut while removing the hood open mounting bolt.
3. After the mounting bolt and nut are removed, push the hood open switch upward from below.
4. Disconnect the electrical connector from the hood open switch.
5. Remove the hood open switch.

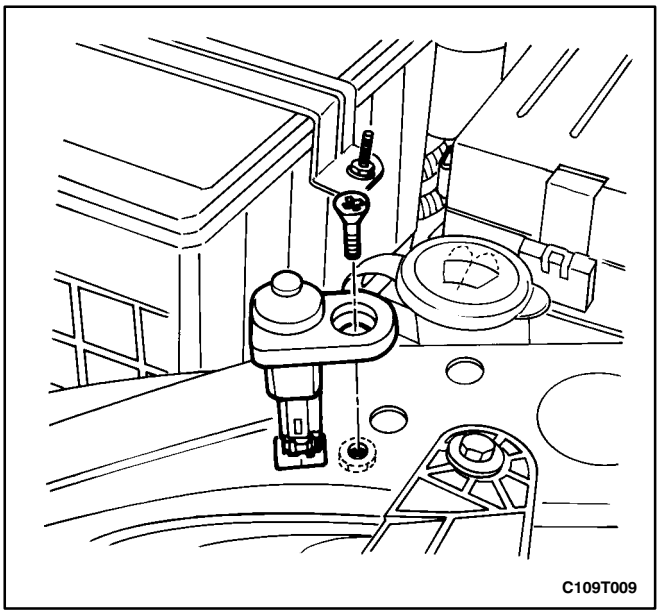

Installation Procedure

1. Install the hood open switch with the mounting bolt and nut.

   Tighten

   Tighten the hood open switch mounting bolt to 4 N•m (35 lb-in).
2. Connect the electrical connector to the hood open switch.
3. Connect the negative battery cable.

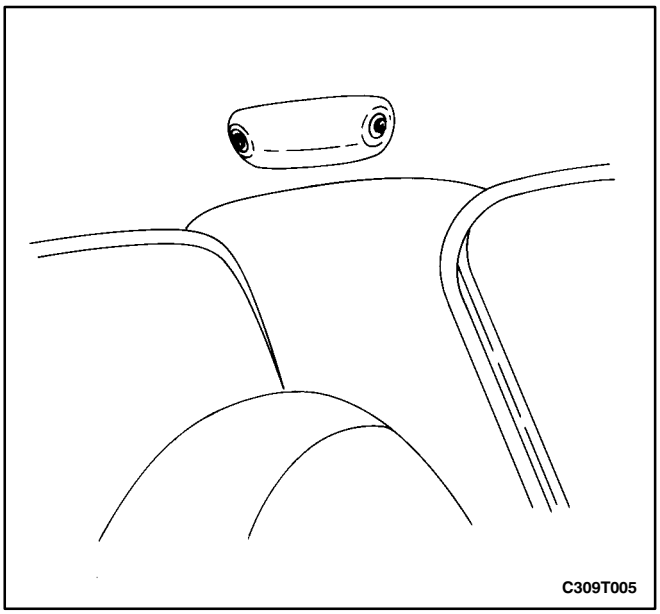

ULTRASONIC SENSOR

Removal Procedure

1. Slide the ultrasonic sensor in a sideways direction to loosen the retaining clip while simultaneously pulling the sensor away from the B-pillar.
2. Disconnect the electrical connector from the ultrasonic sensor.

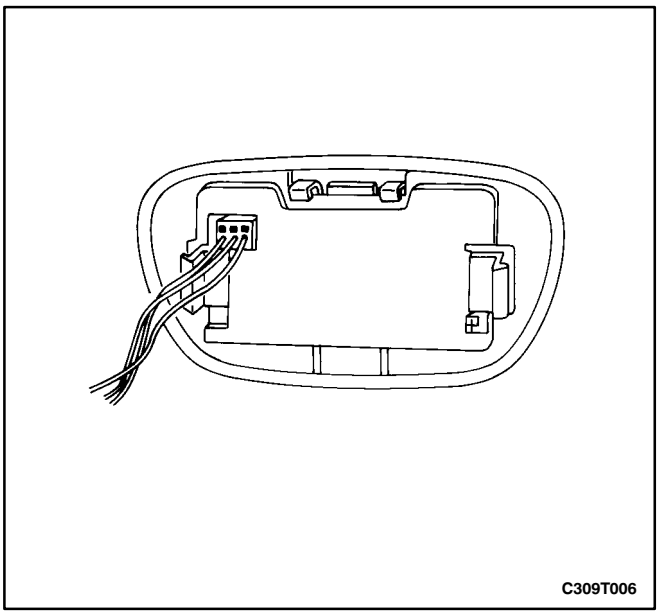

Installation Procedure

1. Connect the electrical connector to the ultrasonic sensor.
2. Install the ultrasonic sensor by pushing it into the opening in the B-pillar until the retaining clips lock into place.

PASSWORD PROGRAMMING

If a transmitter is lost or damaged, the module/receiver must be reprogrammed to communicate with a new transmitter. The passwords recorded in the module/receiver should not be deleted when power is off in the module/receiver.

Each module/receiver should be able to record five passwords. The following method is used to record new passwords in the module/receiver.

1. Connect the scan tool to the assembly line diagnostic link (ALDL) connector.
2. Turn the ignition ON.
3. Send the programming mode message to the module/receiver.
4. Press three times any button on the transmitter to generate a data code including a password which will be recorded by the module/receiver. The module/receiver sends a response message to the scan tool to indicate that the first password has been recorded.
5. Repeat step 4 until the module/receiver has responded that the second, third, fourth, and fifth passwords have been recorded.
6. Turn the ignition OFF.
7. Disconnect the scan tool.

The module/receiver will exit the programming mode and switch to the normal operating mode when either of the following conditions occurs:

- The scan tool is disconnected from the ALDL.
- Five passwords have been recorded in the module/receiver.

GENERAL DESCRIPTION AND SYSTEM OPERATION

REMOTE KEYLESS ENTRY AND PERIMETER/ULTRASONIC ANTI-THEFT SYSTEM

The remote keyless entry and anti-theft system can perform the following functions:

- Remotely lock and unlock the vehicle doors by means of a hand-held, high-frequency transmitter.
- Sense intrusion into the vehicle through the doors, the trunk, or the hood.
- Activate a warning if an intrusion is detected.
- Automatically re-lock the doors if the door or the trunk is not opened within 30 seconds after the vehicle has been unlocked by remote keyless entry.
- Help the driver find the vehicle in a parking area.
- Communicate serial data to a scan tool to help diagnose system faults.
- Sense movement inside the vehicle if it is equipped with the optional ultrasonic motion detector.

The remote keyless entry/anti-theft system consists of the following components:

- Keyless entry and anti-theft module/receiver.
- Hand-held transmitter.
- SECURITY indicator.
- Rear deck lid open switch.
- Rear deck lid tamper switch.
- Front door tamper switch.
- Door contact switch.
- Central locking unit.
- Turn signals.
- Siren.
- Hood open switch.
- Ultrasonic sensor (optional)

REMOTE LOCKING AND UNLOCKING

The hand-held transmitter locks and unlocks the vehicle doors by sending radio waves to the module/receiver in the vehicle. The effective range of the transmitter varies between 5 and 10 meters (approximately 16 to 32 feet), depending on whether or not objects such as other vehicles are blocking the path of the radio waves.

The transmitter has a LOCK button and an UNLOCK button which function only when the ignition is OFF and all openings (doors, engine hood, rear deck lid) are closed. Pressing the UNLOCK button has the following effects:

- The doors are unlocked.
- The turn signals flash twice.
- The module is disarmed.

Pressing the LOCK button has the following effects:

- The doors are locked.
- The turn signals flash once.
- The module is armed.

The transmitter has a replaceable battery. The battery is designed to last at least three years before replacement is necessary.

SECURITY INDICATOR

There is a SECURITY indicator on the instrument panel. After the LOCK button of the transmitter is pressed, the module/receiver is placed in the armed mode, and the SECURITY indicator flashes. The SECURITY indicator turns ON for 0.1 second and OFF for 0.7 second, and it flashes at that frequency until the module/receiver is disarmed.

INTRUSION SENSING

The anti-theft function is armed if the transmitter sends the LOCK message to the module/receiver when the ignition is OFF. If the hood, the door, or the rear deck lid is opened, the hood open, the door contact, or the rear deck lid open switch will change its input to the module/receiver, and the alarm will be activated unless either of the following conditions has occurred:

- An UNLOCK message was received from the transmitter.
- The front door tamper or the rear deck lid tamper switches indicate key operation.

The alarm will also be activated if the ignition input is changed to battery voltage before either of the following conditions occurs:

- An UNLOCK message was received from the transmitter.
- The front door tamper or the rear deck lid tamper switches indicate key operation.
- The alarm will also be activated if the anti-theft function has been armed and the ultrasonic sensor (optional) detects movement within the vehicle before the front door or rear deck lid tamper switches have indicated key operation.

SIREN

The remote keyless entry system is armed when the LOCK message is received from the transmitter when the ignition is OFF. When the system is armed, it will activate the siren and flash the turn signals for 28 seconds if any of the following conditions occurs:

- A door is opened without using the key before an UNLOCK signal is received from the transmitter.
- The rear deck lid is opened without using the key before an UNLOCK signal is received from the transmitter.
- The hood is opened before an UNLOCK signal is received from the transmitter and before a door or the rear deck lid is unlocked.
- The ignition switch input indicates battery voltage before either a key is used to unlock the vehicle or an UNLOCK signal is received from the transmitter.

The siren is disarmed after it begins to sound an alarm if any of the following conditions occurs:

- The door is opened with the key.
- The rear deck lid is opened with the key.
- The UNLOCK or LOCK button on the remote transmitter is pressed.

VEHICLE LOCATOR

The remote keyless entry system assists the driver in locating the vehicle. When the vehicle is unlocked with the remote control, the turn signals flash twice to indicate the location of the vehicle. The duration of the flashes and the length of time between flashes is used to indicate certain vehicle conditions. Refer to “Fault or Alarm Indication” in this section.

AUTOMATIC LOCKING (SAFETY LOCK)

The remote keyless entry system has an automatic locking feature. If the doors are unlocked with the remote transmitter while the control module/receiver is armed, the doors are automatically re-locked after 30 seconds unless any of the following events occurs:

- The door is opened.
- The ignition switch is turned ON.
- The rear deck lid is opened.
- The hood is opened.

MODULE/RECEIVER

The remote keyless entry module/receiver is contained in the floor console. The module/receiver processes signals from the remote transmitter and the intrusion sensors, and it activates the alarm if an invasion is detected. The module/receiver also has a self-diagnostic function which will display trouble codes. In order to display trouble codes, a scan tool must be connected to the assembly line diagnostic link (ALDL) connector.

The module/receiver will not communicate with transmitters from other vehicles because there are over four billion possible electronic password combinations. The module/receiver has an attached antenna to detect signals from the transmitter.

FAULT OR ALARM INDICATION

When the UNLOCK button on the remote transmitter is pressed, the module/receiver will flash the parking lights to indicate information about the remote keyless entry and anti-theft system.

Normal Condition: If there has not been an intrusion and no fault has been detected, the module/receiver will signal a normal condition when the UNLOCK button is pressed. The parking lights will flash twice for 0.5-second, with a 0.5-second pause between flashes.

USS Fault Indication: If there is a fault in the ultra sonic sensor, the module/receiver will signal the fault when the UNLOCK button is pressed. The parking lights will flash twice for 1 second with a 0.5-second pause between flashes.

Alarm Indication: If there has been an intrusion since the last time the LOCK button was pressed, the module/receiver will signal that there has been an intrusion when the UNLOCK button is pressed. The parking lights will flash twice for 0.5-second, and there will be a 1.5-second pause between flashes.

Alarm and fault information in the module/receiver will be erased the next time the module/receiver enters the armed condition after receiving a LOCK message from the transmitter.

BLANK

SECTION 9T

IMMOBILIZER ANTI-THEFT SYSTEM

CAUTION: Disconnect the negative battery cable before removing or installing any electrical unit or when a tool or equipment could easily come in contact with exposed electrical terminals. Disconnecting this cable will help prevent personal injury and damage to the vehicle. The ignition must also be in LOCK unless otherwise noted.

TABLE OF CONTENTS

Specifications 9T-13
Fastener Tightening Specifications 9T-13
Schematic and Routing Diagrams 9T-14
Immobilizer Anti-Theft System 9T-14
Diagnosis 9T-15
Immobilizer Anti-Theft System 9T-15
DTC 53 ECM Immobilized Error 9T-16
Key Status Errors 9T-17
Communication Between Immobilizer and Test Equipment 9T-18
Maintenance and Repair 9T-19
On-Vehicle Service 9T-19
Key Coding Procedure 9T-19
Identification Code Reprogramming 9T-19
Ignition Key Transponder 9T-20
Detection Coil 9T-20
Immobilizer Control Unit 9T-22
General Description and System Operation 9T-24
Immobilizer System 9T-24
Electronically Coded Keys 9T-24
Detection Coil 9T-24
Immobilizer Control Unit 9T-24
Serial Data Link 9T-25
Electronic Control Module (ECM) 9T-25

SPECIFICATIONS

FASTENER TIGHTENING SPECIFICATIONS

Application	N•m	Lb-Ft	Lb-In
Hood Release Handle Screw	2.5	–	22
Immobilizer Control Unit	4	–	35

SCHEMATIC AND ROUTING DIAGRAMS

IMMOBILIZER ANTI-THEFT SYSTEM

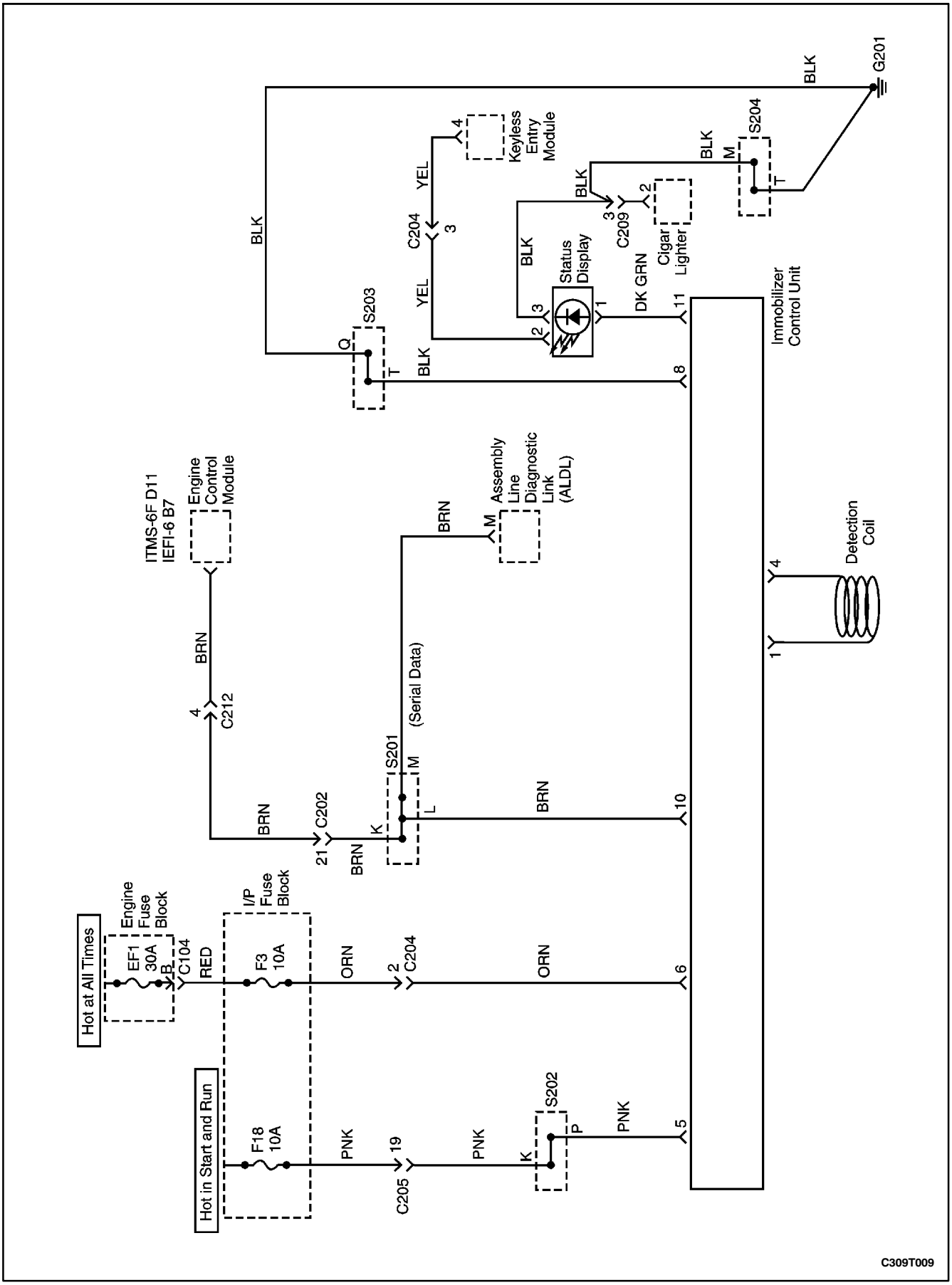

DIAGNOSIS

ANTI-THEFT IMMOBILIZER SYSTEM

The anti-theft immobilizer system requires diagnosis when it is not possible to start the engine. If the no-start condition occurs because of the immobilizer system, a diagnostic trouble code (DTC) 53 should be set. The immobilizer control unit monitors the detection and reading of the ignition key. The self-test capability is limited to those functions. Faults are communicated to a scan tool during diagnosis, but they are not stored in the immobilizer control unit's memory. Unauthorized use of a scan tool could be a method of defeating the anti-theft immobilizer system, so certain scan tool procedures require the use of a password. The following functions are password protected:

- Coding of an additional key.
- Deleting all key codes.
- Deletion of the immobilizer identification (ID) Code.
- Deletion of the electronic control module (ECM) identification (ID) code.

The following functions do not require a password:

- Reading an ignition key to determine if the transponder is working or if a key is authorized.
- Reading the immobilizer ID-code to verify that it matches the ECM ID-code.

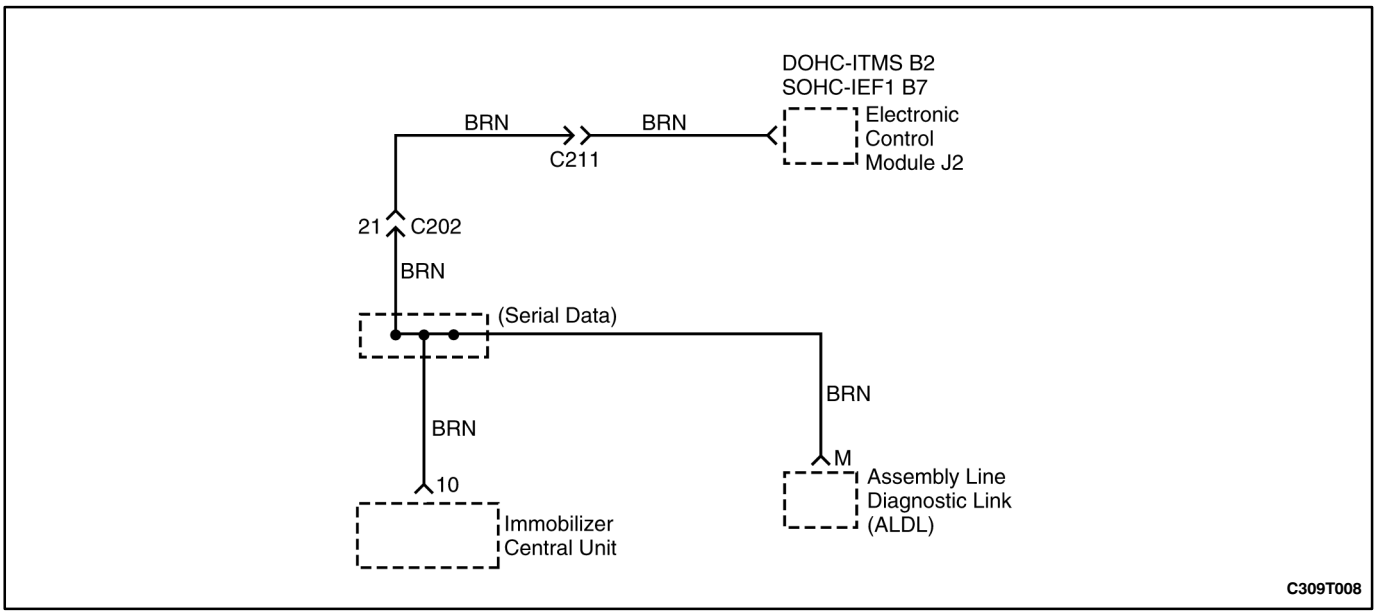

DIAGNOSTIC TROUBLE CODE (DTC) 53 ECM IMMOBILIZED ERROR

Circuit Description

When the ignition is turned ON, the key is tested by the immobilizer anti-theft system. While the key code is being read by the immobilizer control unit, the engine can start and run with any key that will turn the lock cylinder. The key code is read and compared with key codes that have been stored in the memory of the immobilizer control unit. If a valid key is detected, the immobilizer control unit sends a serial data release message to the electronic control module (ECM). Included in the release message is an identification (ID) code which assures that neither the immobilizer control unit nor the ECM have been substituted to defeat the system. If the ECM receives an invalid release message, the ECM performs the following actions:

- Disables the fuel injector circuit.
- Disables the fuel pump circuit.
- Disables the ignition coil.

DTC 53 Will Set When

- The ECM does not receive the signal from the immobilizer control module within 0.562 seconds when the vehicle is stationary or within 1.5 seconds when the vehicle is moving.
- The ECM receives an incorrect release message from the immobilizer control unit over 5 times.
- The above conditions are maintained until the ignition switch is turned OFF.

DTC 53 Will Clear When

The ignition switch is turned OFF or the scan tool CLEAR CODES command is issued.

DTC 53 – ECM Immobilized Error

Step	Action	Value	Yes	No
1	Connect the scan tool using the following procedure: 1. Insert the immobilizer data cartridge into the scan tool. 2. Turn the ignition switch to the OFF position. 3. Connect the scan tool to the assembly line diagnostic link (ALDL). 4. Connect the scan tool's power cord to the cigar lighter socket. 5. Turn the ignition ON, but do not start the engine. Is communication established between the scan tool and the immobilizer control unit?	–	Go to *Step 2*	Go to "Communicatio n Between Immobilizer and Test Equipment".
2	Select SYSTEM DIAGNOSIS from the scan tool menu. Does the KEY STATUS message indicate position number (POS NR) 00?	–	Go to "Key Status Errors".	Go to *Step 3*
3	Read the IMMO & ECM ID-CODE message that was displayed after requesting SYSTEM DIAGNOSIS. Does the message ID-CODE DIFFERENT appear?	–	Go to "Identification (ID) Code Reprogramming"	Go to *Step 4*
4	Check for an open circuit between the immobilizer control unit and the ECM. Is the circuit open?	–	Go to *Step 5*	Go to *Step 6*
5	Repair the open circuit between the ECM and the immobilizer control unit. Is the repair complete?	–	System OK	–
6	1. Replace the ECM. *2.* Reprogram the ID code. Is the repair complete?	–	System OK	–

KEY STATUS ERRORS

The following KEY STATUS messages may be shown on the scan tool after commanding SYSTEM DIAGNOSIS :

- IGNITION OFF STATUS. This message informs the technician that the ignition is off during the key coding process. Turn the ignition ON during key coding, but do not start the engine.
- KEY IS OCCUPIED. Only five keys may be coded. If a new key is desired, the previous key codes must be deleted. Up to five keys may then be authorized.
- ALREADY AUTHORIZED. Key coding is being attempted with a key that is already authorized.
- ERROR NO. 001, 002, 003. There is no communication between the transponder in the ignition key and the detection coil. Follow the steps below to diagnose the problem:
  1. Try a different key. If a different key works, the problem was in the original key.
  2. If trying a different key resulted in the same error message, replace the detection coil.
- INVALID KEY. The communication between the immobilizer control unit and the key transponder has not validated the key. Follow the steps below to diagnose the problem:
  1. Code the key. Refer to "Key Coding Procedure" in this section.
  2. If the same message is received after key coding, check the connection of the detection coil.
  3. If the detection coil is OK, replace the immobilizer. Refer to "Immobilizer Control Unit" in this section.
- NO TRANSPONDER DETECTED. The fault may be in the ignition key transponder, the detection coil, or the immobilizer. Follow the steps below to diagnose the problem:
  1. Try a different key. If a different key works, the problem was in the original key.
  2. If trying a different key resulted in the same error message, check the connection of the detection coil.
  3. If the connection of the detection coil is OK, disconnect the detection coil and use an ohmmeter to check for an open detection coil.

4. If the detection coil was not open, replace the immobilizer control unit. Refer to “Immobilizer Control Unit” in this section.

COMMUNICATION BETWEEN IMMOBILIZER CONTROL UNIT AND TEST EQUIPMENT

1. Connect the test equipment as described in the *Scan Tool Equipment Manual*.
2. If communication between the scan tool and the test equipment was unsuccessful, wait 30 seconds and try again.
3. If communication was not successful on the second try, turn the ignition OFF and check the wire and connectors between the immobilizer control unit terminal 10 and the assembly line diagnostic link (ALDL) terminal M.
4. If the wire and the connectors between the ALDL and the immobilizer control unit are OK, replace the immobilizer control unit. Refer to “Immobilizer Control Unit” in this section.

MAINTENANCE AND REPAIR

ON-VEHICLE SERVICE

KEY CODING PROCEDURE

1. Install the immobilizer control unit cartridge in the scan tool.
2. Turn the ignition OFF.
3. Connect the scan tool.
4. Turn the ignition ON with the key to be coded.
5. Enter the four-digit password that enables service personnel to use the scan tool for coding keys.
6. A lost key can be deleted only by deleting all keys and reauthorizing the remaining keys as new keys. If a key was lost, go to Step 7. If no keys have been lost, but an additional key is desired, go to Step 8.
7. Use the scan tool command DELETE ALL KEY CODES.
8. Use the scan tool command AUTHORIZE ONE ADDITIONAL KEY.
9. Repeat Steps 4, 5, and 6 until the immobilizer control unit has recorded all of the new keys or reauthorized all of the remaining keys after a deletion. The immobilizer control unit can record a maximum of five keys.
10. Return the system to the normal mode.
11. Turn OFF the ignition.
12. Turn ON the ignition.
13. Verify that the key coding was successful by starting the engine with each of the authorized keys.

IDENTIFICATION CODE REPROGRAMMING

Reprogram the ID code in the following situations:

- An immobilizer control unit is replaced.
- An electronic control module (ECM) is replaced.

If a valid key has been lost, refer to “Key Coding Procedure” in this section.

Reprogramming Procedure:

1. Turn the ignition OFF. Reprogramming is not allowed while the engine is running.
2. Insert the immobilizer control unit cartridge into the scan tool.
3. Do not start the vehicle, but turn the ignition ON.
4. Enter the four-digit password that enables service personnel to use the scan tool for ID code reprogramming.
5. Use the scan tool to command RESET ID CODE.

6. Turn the ignition OFF and ON again, but do not crank or start the engine. The ECM will reset the ECM ID code to match the new ID code that was calculated and sent by the immobilizer control unit when the ignition was first turned ON after the reset command.
7. Return the system to the normal mode.
8. Turn OFF the ignition.
9. Turn ON the ignition.
10. Start the engine.

After reprogramming the ID code, the scan tool SYSTEM DIAGNOSIS command can verify that the ECM ID code matches the immobilizer control unit ID code.

If the reprogramming procedure does not result in matching ID codes, check the electrical connectors for the serial data wire between the immobilizer control unit and the ECM.

IGNITION KEY TRANSPONDER

If a transponder is faulty, the ignition key must be replaced. It is not possible to install a new transponder into a key.

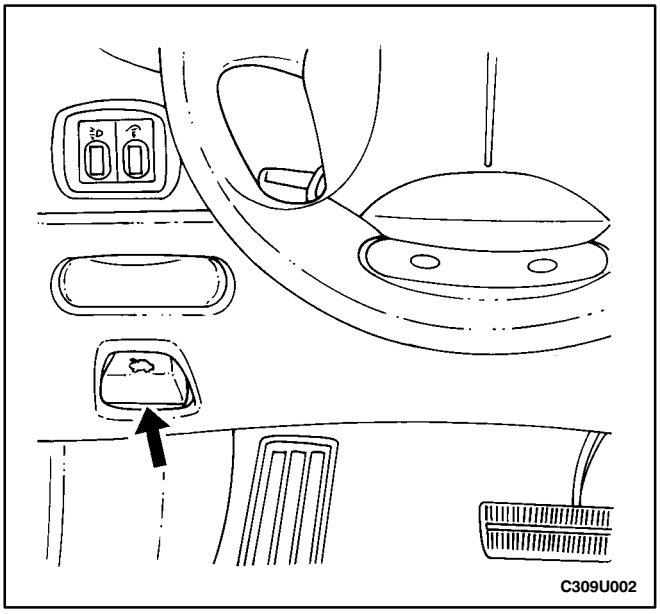

DETECTION COIL

Removal Procedure

1. Remove the screw that attaches the hood release handle.

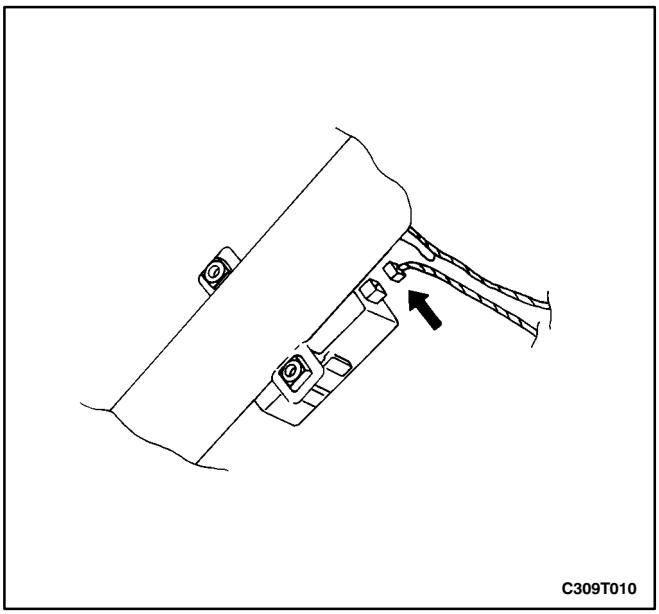

2. Carefully remove the instrument panel lower cover by pulling until the retaining clips are free from the slots in the instrument panel.
3. Remove the steering column lower cover. Refer to *Section 6E, Steering Wheel and Column*.
4. Disconnect the two-pin connector from the immobilizer.

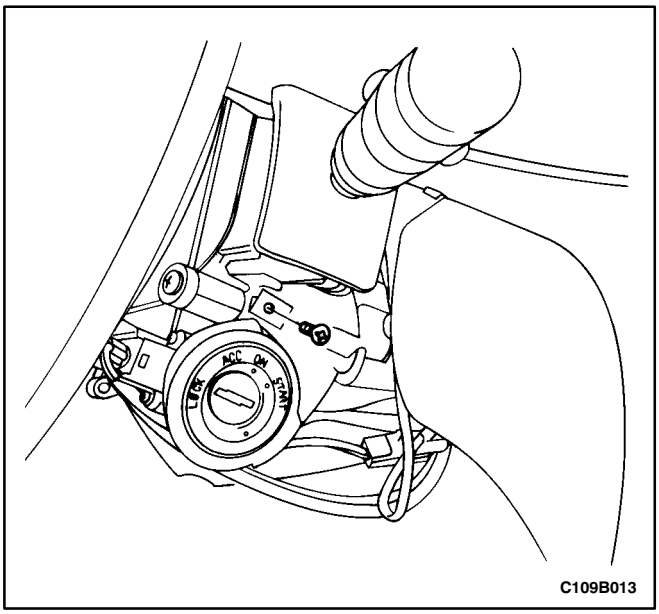

5. Remove the ignition switch keyhole lamp retaining screw and the lamp.

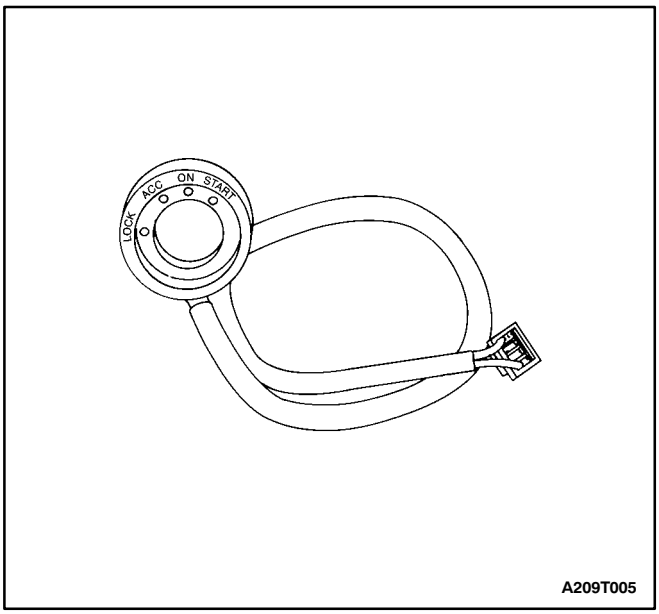

6. Pry the detection coil away from the lock cylinder. If the detection coil will be replaced with a new one, it does not matter if the key position trim ring is damaged during removal. A new trim ring is part of the new detection coil.

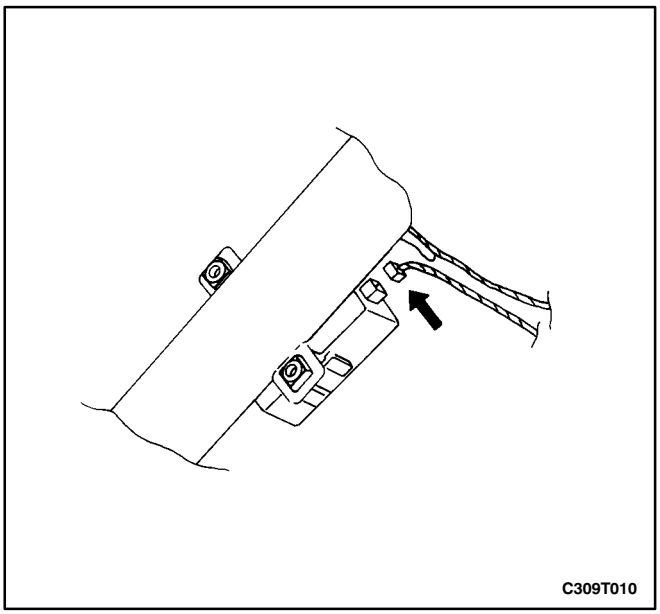

Installation Procedure

1. Install the detection coil by pressing it onto the lock cylinder until it snaps in place.
2. Install the ignition switch keyhole lamp with the retaining screw.
3. Connect the two-pin connector to the immobilizer.

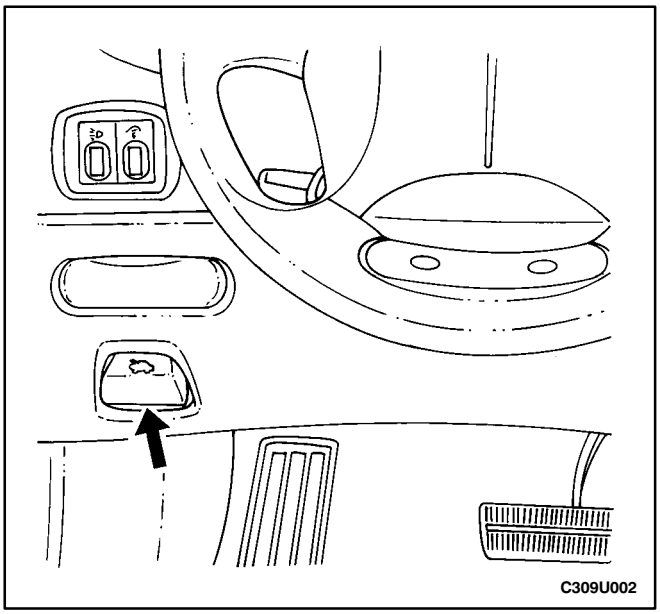

4. Install the steering column lower cover. Refer to *Section 6E, Steering Wheel and Column.*
5. Install the instrument panel lower cover.
6. Install the screw that attaches the hood release handle.

Tighten

Tighten the hood release handle screw to 2.5 N•m (22 lb-in).

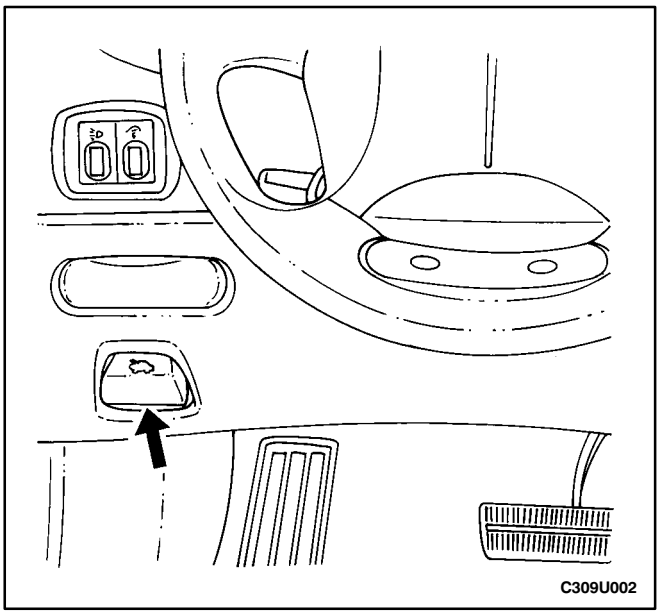

IMMOBILIZER CONTROL UNIT

Removal Procedure

1. Remove the screw that attaches the hood release handle.

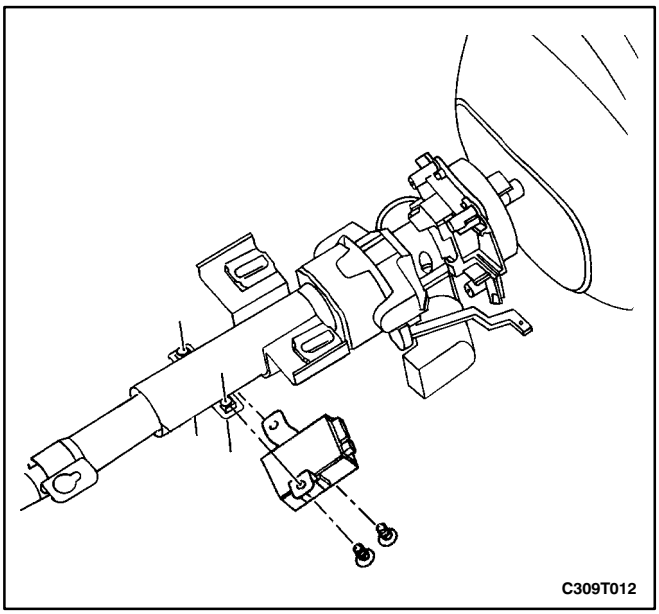

2. Carefully remove the instrument panel lower cover by pulling until the retaining clips are free from the slots in the instrument panel.
3. Remove the steering column lower cover. Refer to *Section 6E, Steering Wheel and Column*.
4. Disconnect the two electrical connectors from the immobilizer control unit.
5. Remove the immobilizer control unit.

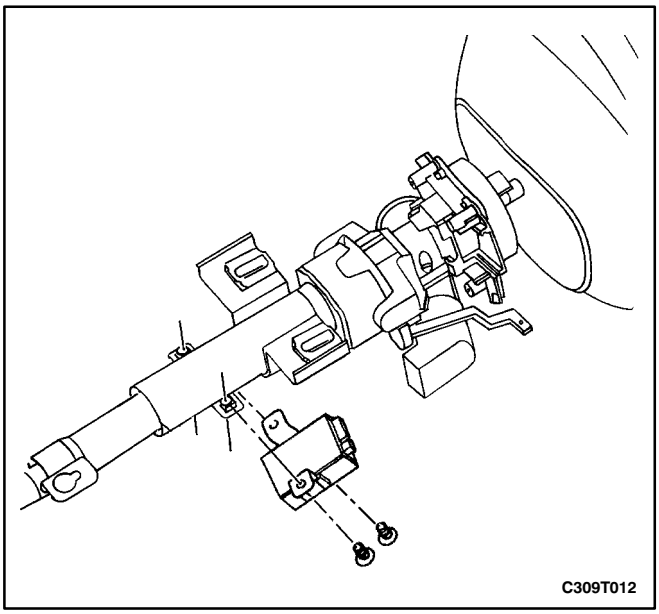

Installation Procedure

Important: After replacing the immobilizer, the ignition keys must be re-authorized using the key coding procedure. Refer to “Key Coding Procedure” in this section. Also, the electronic control module (ECM) identification (ID) code must be reset. Refer to “Identification Code Reprogramming” in this section.

1. Install the immobilizer control unit.

Tighten

Tighten the immobilizer control unit mounting bolts to 4 N•m (35 lb-in).

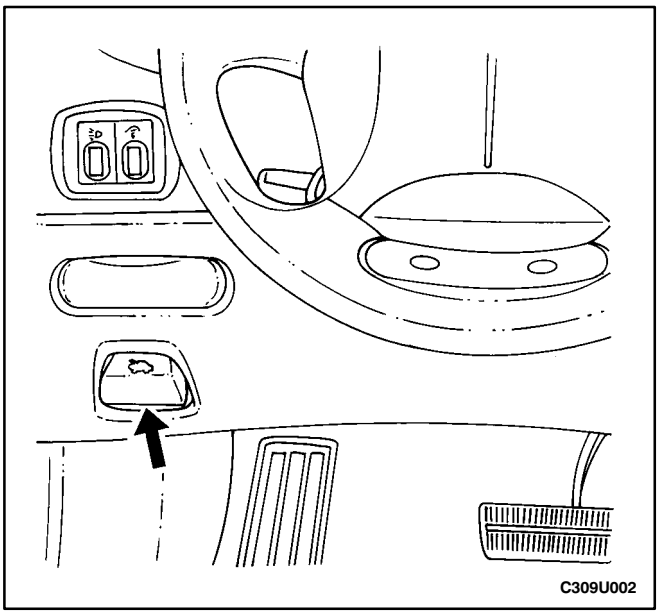

2. Connect the electrical connectors to the immobilizer control unit.
3. Install the steering column lower cover. Refer to *Section 6E, Steering Wheel and Column.*
4. Install the instrument panel lower cover.
5. Install the screw that attaches the hood release handle.

Tighten

Tighten the hood release handle screw to 2.5 N•m (22 lb-in).

GENERAL DESCRIPTION AND SYSTEM OPERATION

IMMOBILIZER SYSTEM

The purpose of the immobilizer system is to prevent the vehicle from being stolen or driven by unauthorized users.

Authorization is accomplished by the use of an electronically coded key. When the ignition is turned ON, the key is tested by the immobilizer system. While the key code is being read by the immobilizer control unit the engine can start and run with any key that will turn the lock cylinder. The key code is read and compared with key codes that have been stored in the immobilizer control unit's memory. If a valid key is detected, the immobilizer control unit sends a serial data release message to the electronic control module (ECM). Included in the release message is an identification (ID) code which assures that neither the immobilizer control unit nor the ECM have been substituted to defeat the system. If the ECM does not receive a release message within a specified time, or if the ID-codes do not match, the ECM performs the following actions:

- Disables the fuel injector circuit.
- Disables the fuel pump circuit.
- Disables the ignition coil.
- Sets Diagnostic Trouble Code (DTC) 53.

The above conditions are maintained until the ignition is turned OFF.

The immobilizer control unit system consists of the following components:

- Electronically coded keys.
- Detection coil.
- Immobilizer control unit.
- ECM.
- Instrument cluster indicator.
- Assembly line diagnostic link (ALDL) connector to provide serial data access for a scan tool.

An ECM for a vehicle without an immobilizer control unit cannot be interchanged for an ECM that is used with an immobilizer control unit system. The immobilizer control unit and ECM must have a matching ID code. ID coding and key coding are accomplished by using a scan tool.

ELECTRONICALLY CODED KEYS

Each valid ignition key has an internal transponder which transmits a unique code. When a key is inserted into the ignition lock, the transponder is inductively coupled to the detection coil. The transponder interacts with the detection coil to generate an amplitude modulated signal which is conducted from the detection coil to the immobilizer control unit. The immobilizer control unit reads the radio frequency signal and a release message is sent to the electronic control module if the key is authorized.

New keys are coded by using a scan tool. Refer to "Key Coding Procedure" in this section.

DETECTION COIL

A detection coil is mounted at the ignition lock as an integral part of the key position trim ring. The wires to and from the detection coil are connected to the immobilizer. When the ignition is turned ON, the immobilizer energizes the detection coil and the coil is coupled inductively to the transponder in the ignition key. The immobilizer sends a modulated signal to the detection coil and the signal is changed by interaction with the internal transponder in the ignition key. The immobilizer reads the signal from the detection coil and determines whether or not the key is authorized.

IMMOBILIZER CONTROL UNIT

The immobilizer control unit is an electronic module in the instrument panel which verifies the validity of an ignition key when the ignition is turned ON. To accomplish its purpose, the immobilizer control unit performs the following actions:

- Learns and stores the codes of valid keys.
- Reads the radio frequency input from the ignition key.
- Compares the received code with the codes of the valid keys.
- Sends a release message to the electronic control module (ECM) if a valid key has been inserted.
- Calculates and transmits identification (ID) codes within each release message.
- Controls the status indicator in the instrument cluster.
- Monitors system faults.
- Supports system test functions.

Normal Operation

When the ignition is turned ON, the immobilizer control unit reads the key code transmitted by the transponder in the ignition key. If a valid key is detected, the immobilizer control unit sends a release message to the ECM, and the immobilizer control unit switches to the inactive mode. The release message contains an ID code. Immobilization will be performed by the ECM if no release message is received, or if the ID code in the ECM does not match the immobilizer control unit ID code. If a non-valid key is detected, the release message is not sent to the ECM.

Assembly Line Diagnostic Link (ALDL) Mode

When the ignition is on, a scan tool can switch the immobilizer control unit to the assembly line diagnostic link (ALDL) mode for the purpose of diagnostics, key coding, or ID coding.

ID-Code Handling

One of 65,535 possible ID codes is stored in the immobilizer control unit's memory. The ID code can be erased by using the scan tool's RESET ID CODE command. When the immobilizer control unit calculates a new ID code, the ECM ID code must be reset to match the immobilizer control unit ID code. To reset the ID code refer to "Identification Code Reprogramming." During diagnostic procedures, the ID code can be read for

comparison with the ECM ID code by using the scan tool's READ IMMOBILIZER CONTROL UNIT ID-CODE command.

SERIAL DATA LINK

Serial data can be exchanged between a scan tool, electronic control module (ECM), and the immobilizer control unit. The scan tool connection is the assembly line diagnostic link (ALDL).

ELECTRONIC CONTROL MODULE (ECM)

When the electronic control module (ECM) detects that the ignition is being turned ON, the ECM waits for a release message from the immobilizer control unit. If a release message is not received within a specified time, the ECM disables the engine. The engine is also disabled if the identification (ID) code transmitted by the immobilizer control unit does not match the code stored in the ECM's memory. Immobilization remains in effect until the ignition is turned OFF or battery power is removed.

To prevent the vehicle from being driven, the ECM applies the following strategy:

- The ignition module is put in a bypass mode.
- The ECM will not create an electronic spark timing (EST) output, so no spark will be generated by the ignition coil.
- The ECM will not enable the fuel pump.
- The ECM will not enable the fuel injectors.
- The ECM sets Diagnostic Trouble Code (DTC) 53.

Serial data communication is transmitted on a single wire between the immobilizer control unit and the ECM. During diagnostic procedures or ID code changing, a scan tool is added to the communication system.

An ECM with an immobilizer control unit is not exchangeable with the ECM without an immobilizer control unit.

SECTION 9U

CRUISE CONTROL SYSTEM

CAUTION: Disconnect the negative battery cable before removing or installing any electrical unit or when a tool or equipment could easily come in contact with exposed electrical terminals. Disconnecting this cable will help prevent personal injury and damage to the vehicle. The ignition must also be in LOCK unless otherwise noted.

TABLE OF CONTENTS

Specifications 9U-1
Fastener Tightening Specifications 9U-1
Schematic and Routing Diagram 9U-2
Cruise Control System 9U-2
Diagnosis 9U-3
Cruise Control Diagnosis 9U-3
Maintenance and Repair 9U-8
On-Vehicle Service 9U-8
Cruise Control Actuator 9U-8
Actuator Control Cable 9U-11
Lever Switch 9U-15
General Description and System Operation 9U-17
Cruise Control System Operation 9U-17
Cruise Control Actuator 9U-17
Lever Switch 9U-17

SPECIFICATIONS

FASTENER TIGHTENING SPECIFICATIONS

Application	N•m	Lb-Ft	Lb-In
Actuator Mounting Bolts	6	–	53
Hood Release Handle Screw	2.5	–	22
Steering Column Cover Retaining Screws	3	–	27

SCHEMATIC AND ROUTING DIAGRAM

CRUISE CONTROL SYSTEM

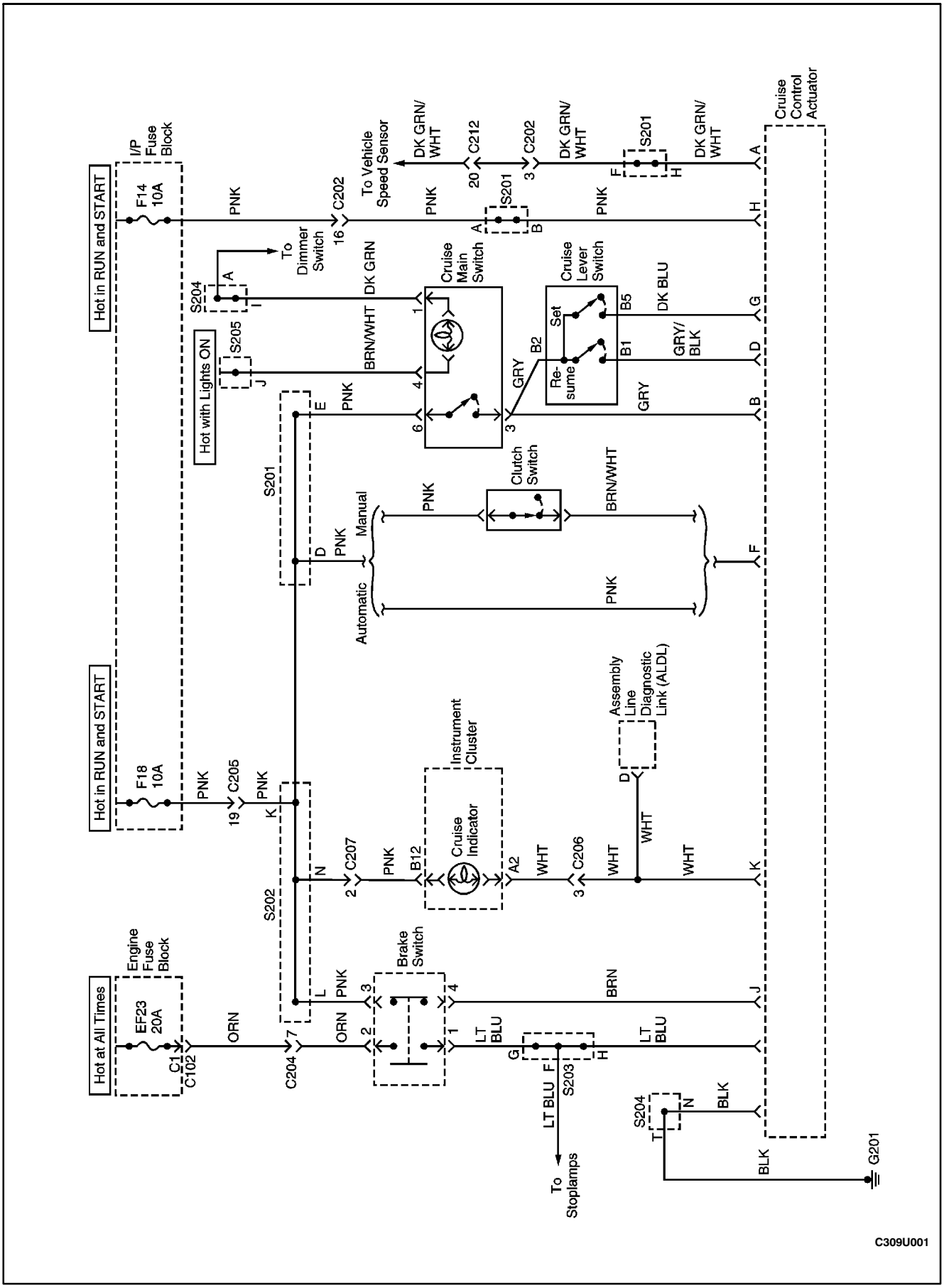

DIAGNOSIS

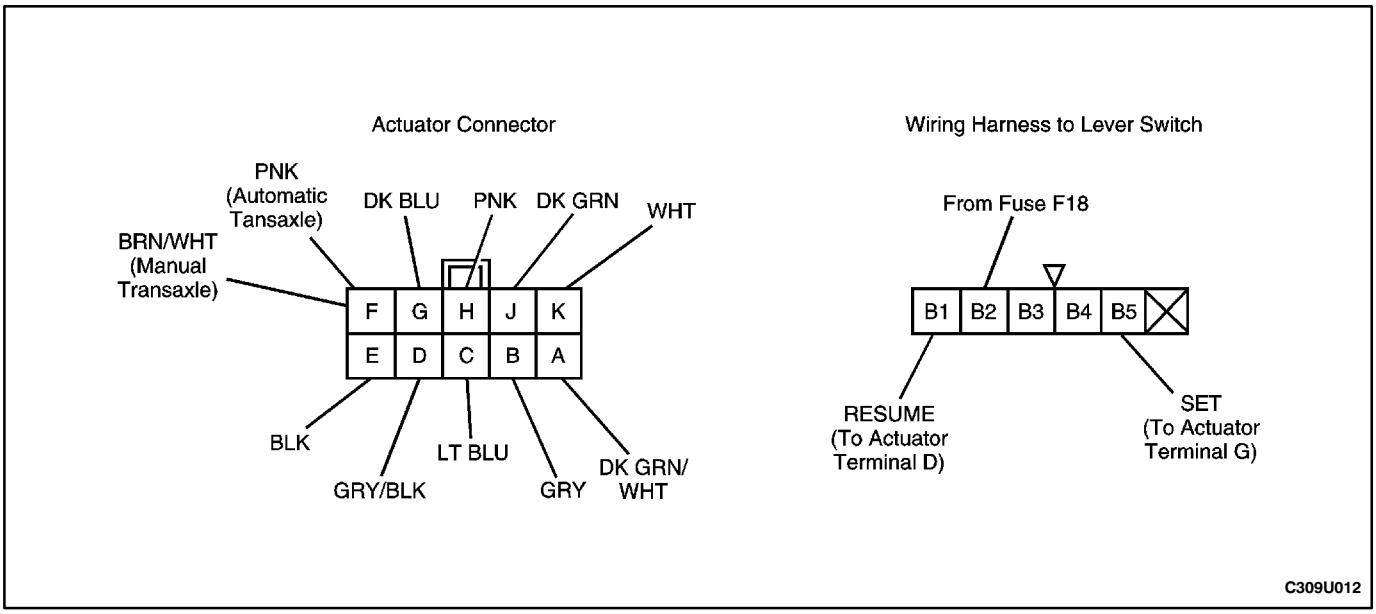

CRUISE CONTROL

Test Description

The number(s) below refer to step(s) on the diagnostic table.

5. The electromagnetic clutch in the cruise control actuator is grounded through the brake lamps.

Cruise Control Does Not Operate

Step	Action	Value(s)	Yes	No
1	Visually inspect the cruise control system and verify the following conditions: ● The electrical connector is correctly attached to the cruise control actuator. ● The actuator and the bracket are not loose. ● The cable is not bent or kinked. ● The cable adjuster is correctly attached to its bracket. ● The cable and bushing are correctly attached to the accelerator assembly. ● The cable is properly adjusted. Have all of the above conditions been verified?	–	Go to *Step 3*	Go to *Step 2*
2	Make repairs to the components of the cruise control system that were observed to be faulty in Step 1. Is the repair complete?	–	System OK	–
3	1. Connect a scan tool to the Assembly Line Diagnostic Link (ALDL) and to a power source. 2. Check for engine control diagnostic trouble codes (DTCs). Is a vehicle speed sensor DTC present?	–	Go to *Step 5*	Go to *Step 4*

Cruise Control Does Not Operate (Cont'd)

Step	Action	Value(s)	Yes	No
4	Diagnose the vehicle speed sensor DTC before continuing with this diagnostic table. After the vehicle speed sensor system has been repaired, is the cruise control still inoperative?	–	Go to *Step 5*	System OK
5	Observe the brake lamps when the brakes are being applied. Do the brake lamps turn ON when the brakes are applied and turn OFF when the brakes are not applied?	–	Go to *Step 7*	Go to *Step 6*
6	Repair the brake lamp system. Does the cruise control operate after the brake lamp system has been repaired?	–	System OK	Go to *Step 7*
7	Check fuses F14 and F18. Is a fuse blown?	–	Go to *Step 8*	Go to *Step 9*
8	1. Check for a short circuit and repair if necessary. 2. Replace the blown fuse(s). Is the repair complete?	–	System OK	–
9	1. Turn the ignition ON. 2. Check the voltage at fuses F14 and F18. Is the specified voltage available at fuses F14 and F18?	11-14 V	Go to *Step 11*	Go to *Step 10*
10	Repair the power supply to the fuse(s). Is the repair complete?	–	System OK	–
11	1. Disconnect the electrical connector from the cruise control actuator. 2. Turn the ignition ON. 3. Check the voltage at terminal H of the connector. Is the voltage equal to the specified value?	11-14 V	Go to *Step 13*	Go to *Step 12*
12	Repair the open circuit between fuse F14 and the cruise control actuator. Is the repair complete?	–	System OK	–
13	With the electrical connector still removed from the cruise control actuator, use an ohmmeter to measure the resistance between connector terminal E and ground. Does the ohmmeter indicate the specified value?	≈ 0 Ω	Go to *Step 15*	Go to *Step 14*
14	Repair the open circuit between ground and terminal E of the actuator connector. Is the repair complete?	–	System OK	–
15	With the electrical connector still removed from the cruise control actuator, use an ohmmeter to measure the resistance between connector terminal C and ground. Does the ohmmeter indicate the specified value?	≈ 0 Ω	Go to *Step 17*	Go to *Step 16*
16	Repair the open circuit between the actuator connector terminal C and the instrument S204. Is the repair complete?	–	System OK	–
17	1. Turn the ignition ON. 2. With the electrical connector still removed from the cruise control actuator, use a voltmeter to check the voltage at terminal J of the connector. Is the voltage equal to the specified value?	11-14 V	Go to *Step 19*	Go to *Step 18*

Cruise Control Does Not Operate (Cont'd)

Step	Action	Value(s)	Yes	No
18	Repair the open circuit between fuse F18 and terminal J of the cruise control actuator. Is the repair complete?	–	System OK	–
19	1. Turn the ignition ON. 2. With the electrical connector still removed from the cruise control actuator, use a voltmeter to check the voltage at terminal F of the connector. Is the voltage equal to the specified value?	11-14 V	Go to *Step 21*	Go to *Step 20*
20	Repair the open circuit between fuse F18 and terminal F of the cruise control actuator. Is the repair complete?	–	System OK	–
21	1. Turn the ignition ON. 2. Make sure that the cruise main switch is OFF. 3. With the electrical connector still removed from the cruise control actuator, use a voltmeter to check the voltage at terminal B of the connector. Is the voltage equal to the specified value?	≈ 0 V	Go to *Step 23*	Go to *Step 22*
22	Repair the short to voltage between the cruise main switch and the cruise control actuator terminal B. Is the repair complete?	–	System OK	–
23	1. Turn the ignition ON. 2. Make sure that the cruise main switch is ON. 3. With the electrical connector still removed from the cruise control actuator, use a voltmeter to check the voltage at terminal B of the connector. Is the voltage equal to the specified value?	11-14 V	Go to *Step 28*	Go to *Step 24*
24	1. Remove the cruise control main switch for testing, but leave the electrical connector attached. 2. Turn the ignition ON. 3. Check the voltage at the PNK wire at the cruise main switch. Is the voltage equal to the specified value?	11-14 V	Go to *Step 26*	Go to *Step 25*
25	Repair the open circuit in the PNK wire between fuse F18 and the cruise control main switch. Is the repair complete?	–	System OK	–
26	1. With the cruise control main switch removed for testing, turn the ignition ON. 2. Turn the cruise control main switch ON. 3. Check the voltage at the GRY wire at the cruise main switch. Is the voltage equal to the specified value?	11-14 V	Go to *Step 28*	Go to *Step 27*
27	Replace the cruise control main switch. Is the repair complete?	–	System OK	–
28	1. Turn the ignition ON. 2. Turn the cruise control main switch ON. 3. With the electrical connector still removed from the cruise control actuator, check the voltage at terminals D and G of the connector. Is the voltage equal to the specified value?	≈ 0 V	Go to *Step 32*	Go to *Step 29*

Cruise Control Does Not Operate (Cont'd)

Step	Action	Value(s)	Yes	No
29	1. Disconnect the 6-pin connector at the cruise control lever switch. 2. Turn the ignition ON. 3. Turn the cruise control main switch ON. 4. With the electrical connector still removed from the cruise control actuator, check the voltage at terminals D and G of the cruise control actuator. Is the voltage equal to the specified value?	0 V	Go to *Step 30*	Go to *Step 31*
30	Replace the cruise control lever switch. Is the repair complete?	–	System OK	–
31	Repair the short to voltage between the cruise control lever switch and the cruise control actuator. Is the repair complete?	–	System OK	–
32	1. Turn the ignition ON. 2. Turn the cruise control main switch ON. 3. Select SET on the cruise control lever switch. 4. While holding the lever switch in the SET position, check the voltage at terminal G of the connector for the cruise control actuator. Does the voltmeter indicate the specified value?	11-14 V	Go to *Step 33*	Go to *Step 37*
33	1. Turn the ignition ON. 2. Turn the cruise control main switch ON. 3. Select RESUME on the cruise control lever switch. 4. While holding the lever switch in the RESUME position, check the voltage at terminal D of the connector for the cruise control actuator. Does the voltmeter indicate the specified value?	11-14 V	Go to *Step 34*	Go to *Step 37*
34	1. Turn the ignition OFF. 2. Disconnect the vehicle speed sensor (VSS). 3. Use an ohmmeter to check continuity between the DK GRN/WHT wire at the VSS and terminal A of the cruise control actuator connector. Does the ohmmeter indicate the specified value?	≈ 0 Ω	Go to *Step 36*	Go to *Step 35*
35	Repair the open circuit between the VSS and the cruise control actuator connector terminal A. Is the repair complete?	–	System OK	–
36	Replace the cruise control actuator. Is the repair complete?	–	System OK	–
37	1. Disconnect the 6-pin connector at the cruise control lever switch. 2. Turn the ignition ON. 3. Turn the cruise control main switch ON. 4. Refer to the illustration of "Wiring Harness to Lever Switch" and test the voltage at terminal B2 of the wiring harness connector. Is the voltage equal to the specified value?	11-14 V	Go to *Step 39*	Go to *Step 38*
38	Repair the open circuit between the cruise control main switch and the cruise control lever switch. Is the repair complete?	–	System OK	–

Cruise Control Does Not Operate (Cont'd)

Step	Action	Value(s)	Yes	No
39	1. Use an ohmmeter to check for an open circuit between terminal B1 of the wiring harness at the lever switch and terminal D of the actuator connector. 2. Also use the ohmmeter to check for an open circuit between terminal B5 of the wiring harness at the lever switch and terminal G of the actuator connector. Does the ohmmeter indicate the specified value for both measurements?	≈ 0 Ω	Go to *Step 40*	Go to *Step 41*
40	Replace the lever switch. Is the repair complete?	–	System OK	–
41	Repair the open circuit between the lever switch connector and the actuator connector. Is the repair complete?	–	System OK	–

MAINTENANCE AND REPAIR

ON-VEHICLE SERVICE

CRUISE CONTROL ACTUATOR

Removal Procedure

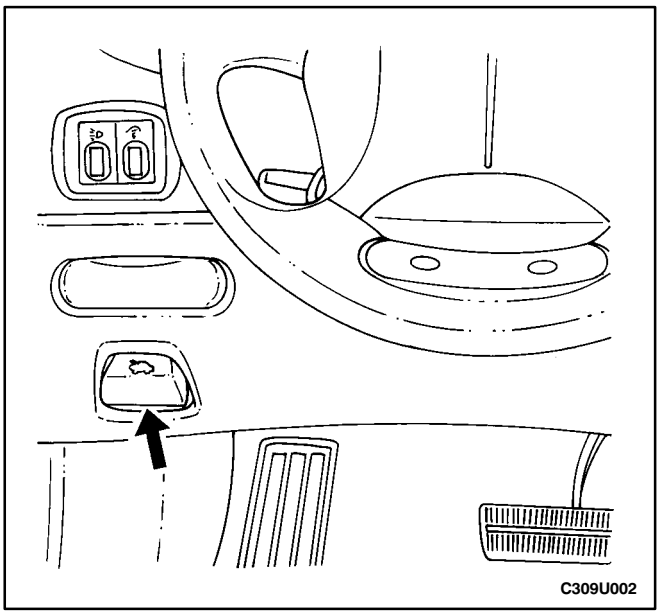

1. Remove the screw that attaches the hood release handle.

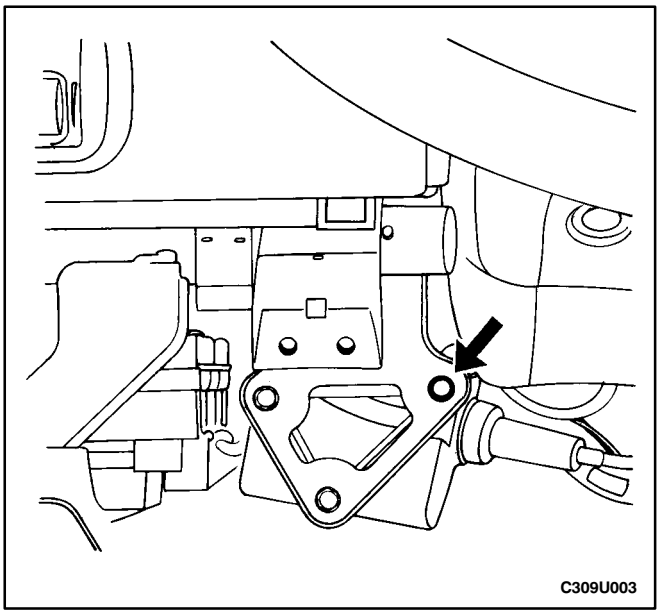

2. Carefully remove the knee bolster trim panel by pulling until the retaining clips are free from the slots in the instrument panel.
3. Disconnect the electrical connector from the cruise control actuator.
4. Remove the cruise control actuator mounting bolts.

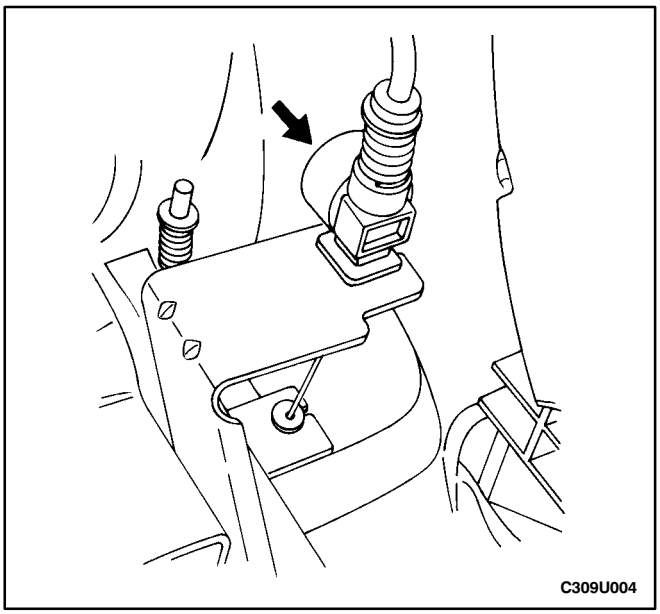

5. Press the release button on the cable adjuster and push the cable toward the adjuster until the spring is compressed.

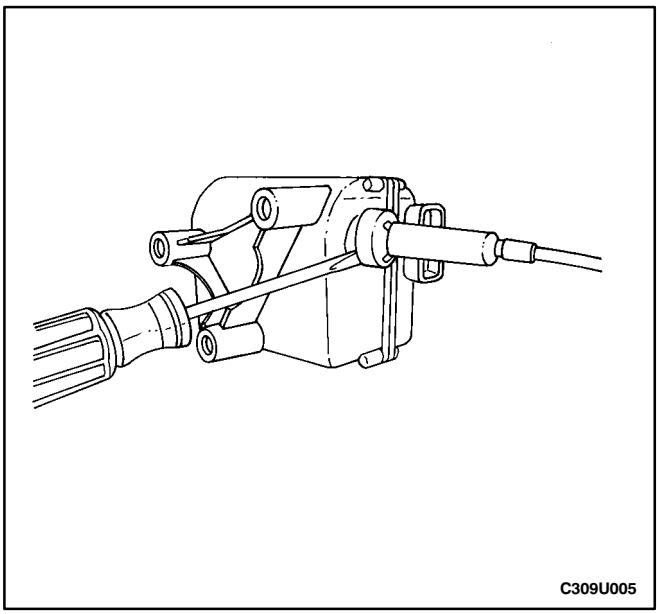

6. Tilt the cable housing and insert a flat-blade screwdriver into one of the slots in the actuator.

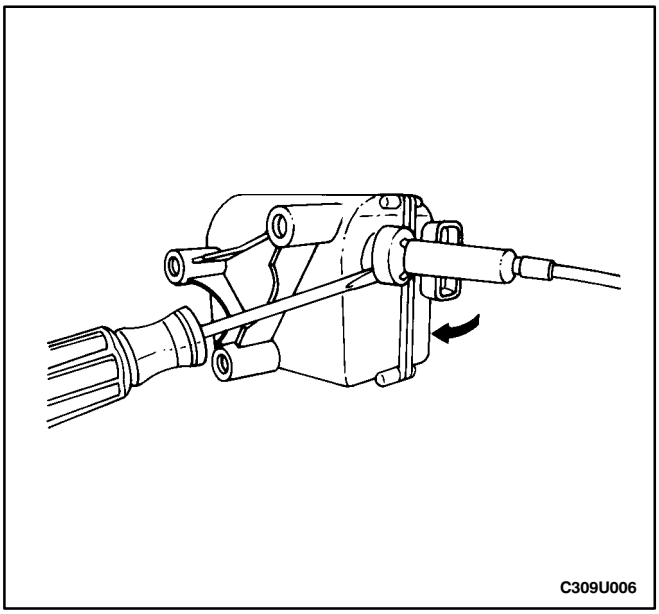

7. Tilt the cable housing toward the screwdriver. The cable housing retainers will release.

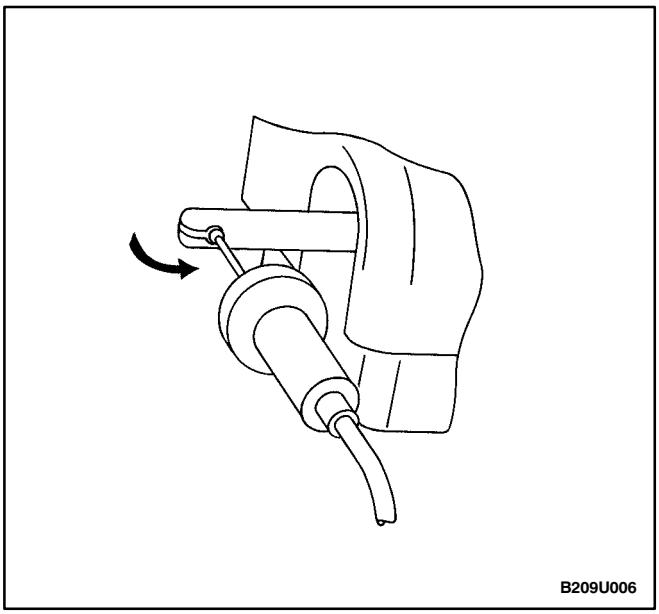

8. Pull the guide sleeve and the cable out of the actuator and turn the cable 90 degrees to the axis of the guide sleeve.

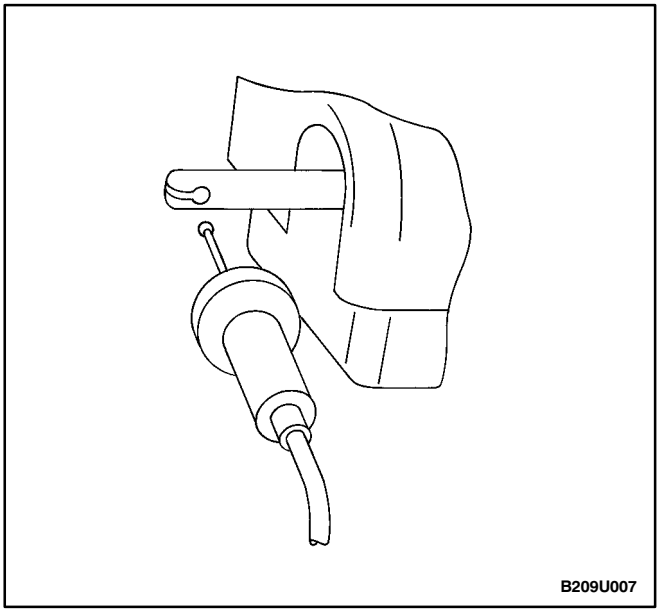

9. Remove the actuator from the cable.

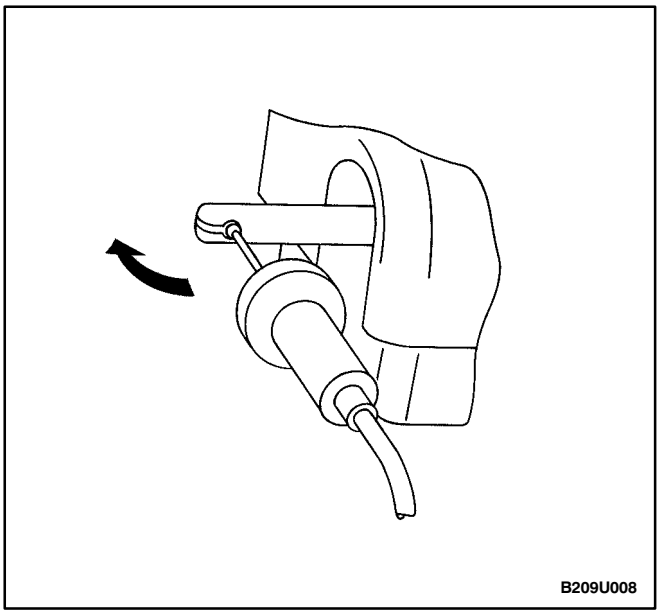

Installation Procedure

1. Insert the cable ball into the actuator cable sleeve.

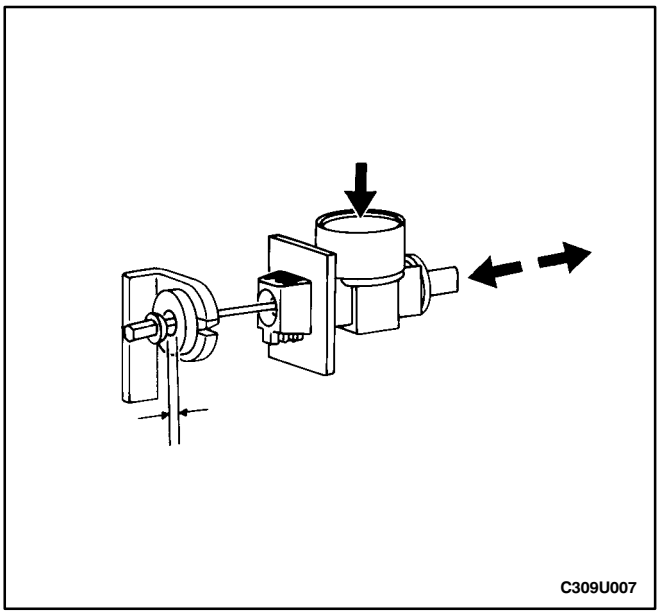

2. Push the cable housing and sleeve into the actuator until the retainers lock the cable housing in place.
3. Install the cruise control actuator mounting bolts.

   Tighten

   Tighten the cruise control actuator mounting bolts to 6 N•m (53 lb-in).
4. Press the cable adjuster button and adjust the cable so that the cable ball nipple is 0.5 mm (0.02 inch) from the bushing on the accelerator assembly.

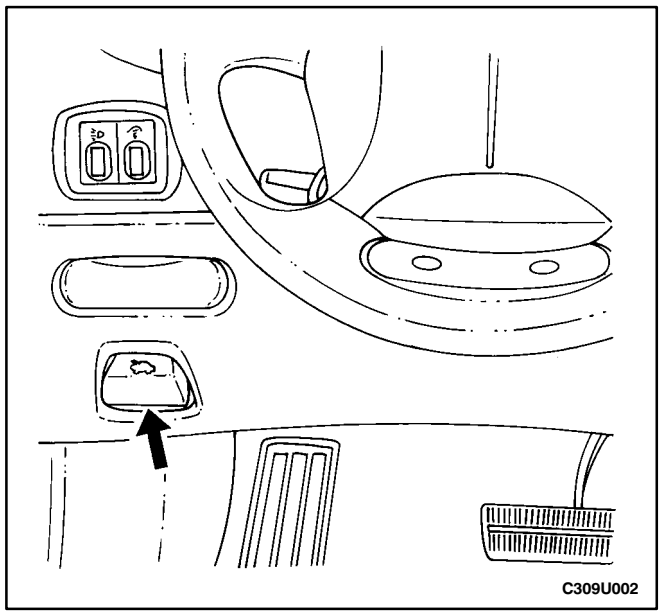

5. Connect the electrical connector to the cruise control actuator.
6. Align the knee bolster trim panel and press the retaining clips into the slots in the instrument panel.
7. Install the hood release handle screw.

Tighten

Tighten the hood release handle screw to 2.5 N•m (22 lb-in).

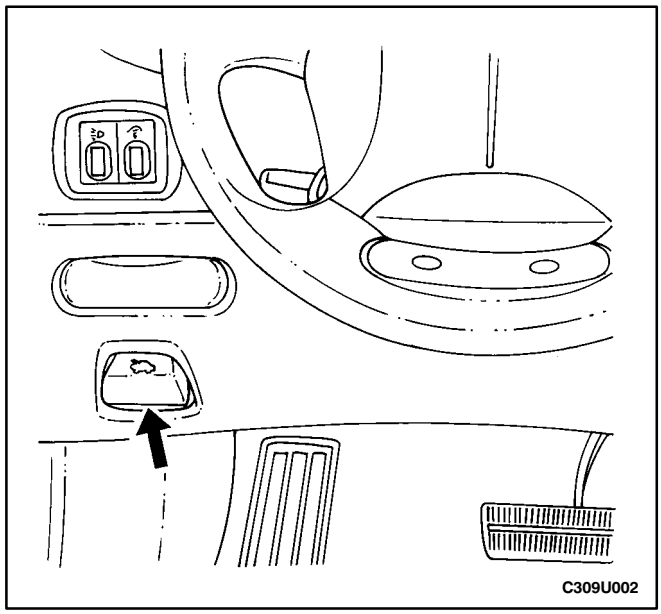

ACTUATOR CONTROL CABLE

Removal Procedure

1. Remove the screw that attaches the hood release handle.

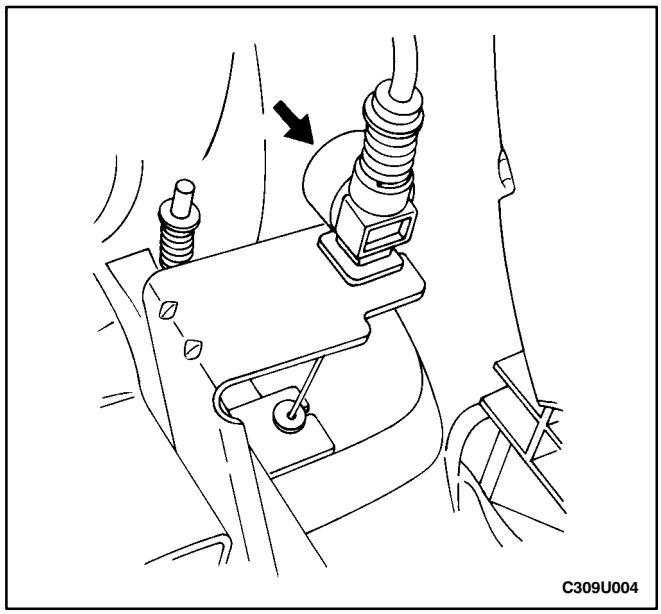

2. Carefully remove the knee bolster trim panel by pulling until the retaining clips are free from the slots in the instrument panel.
3. Press the release button on the cable adjuster and push the cable toward the adjuster until the spring is compressed.

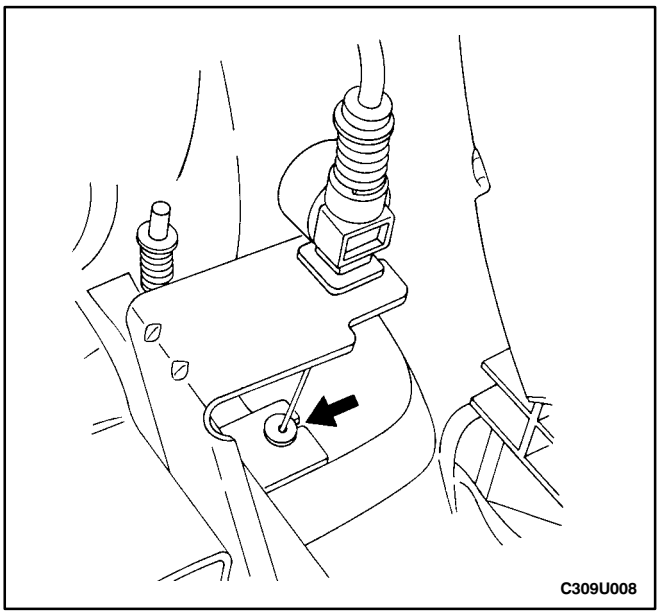

4. Remove the cable bushing from the accelerator assembly.

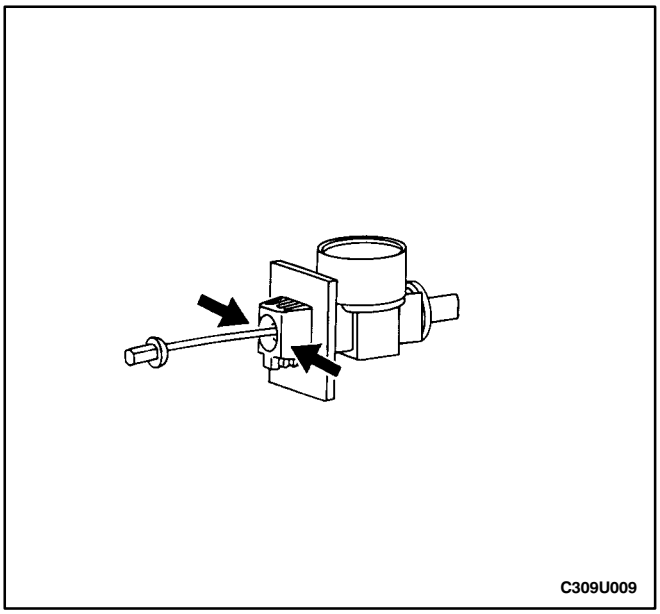

5. Depress the retaining tabs of the cable adjuster and remove the adjuster from the mounting bracket.

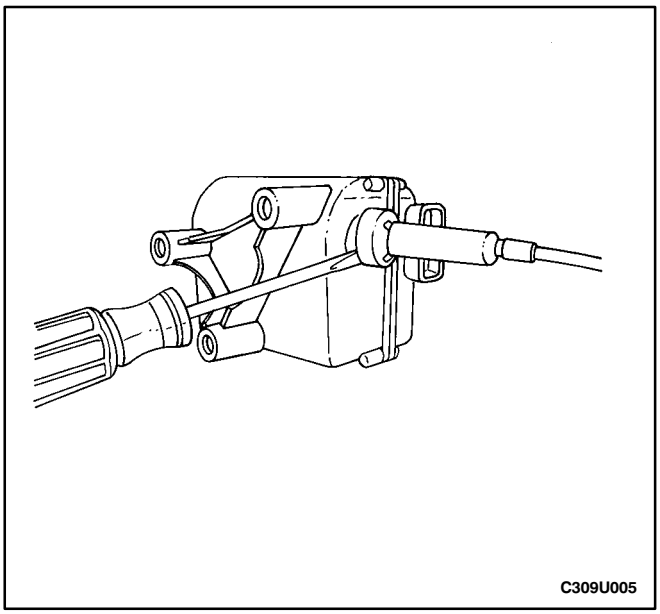

6. Tilt the cable housing and insert a flat-blade screwdriver into one of the slots in the actuator.

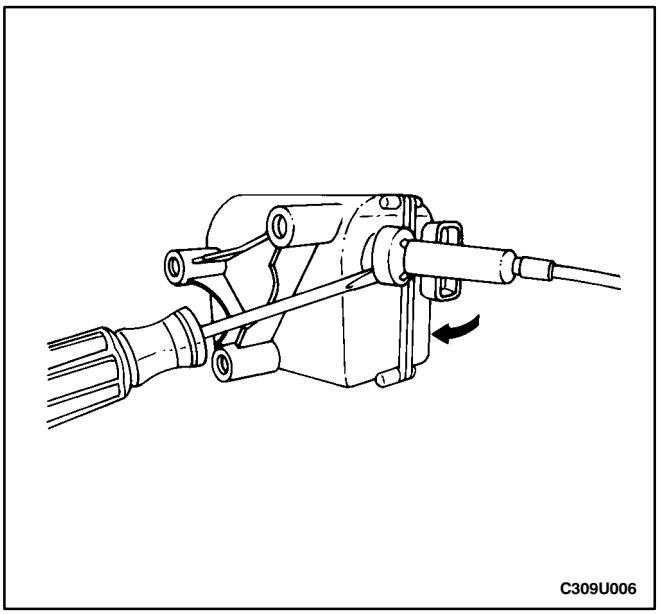

7. Tilt the cable housing toward the screwdriver. The cable housing retainers will release.

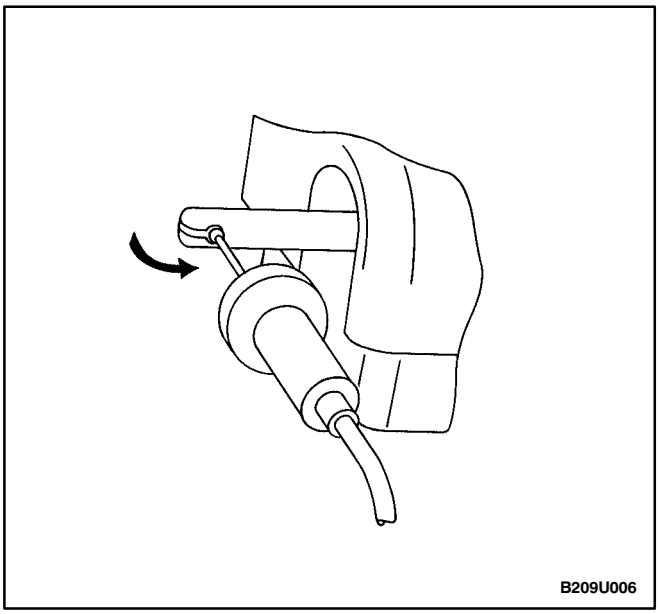

8. Pull the guide sleeve and the cable out of the actuator and turn the cable 90 degrees to the axis of the guide sleeve.

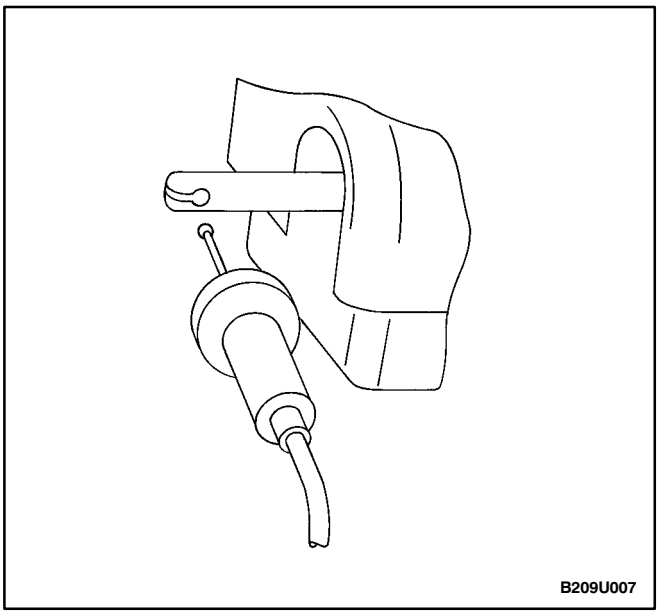

9. Remove the actuator from the cable.

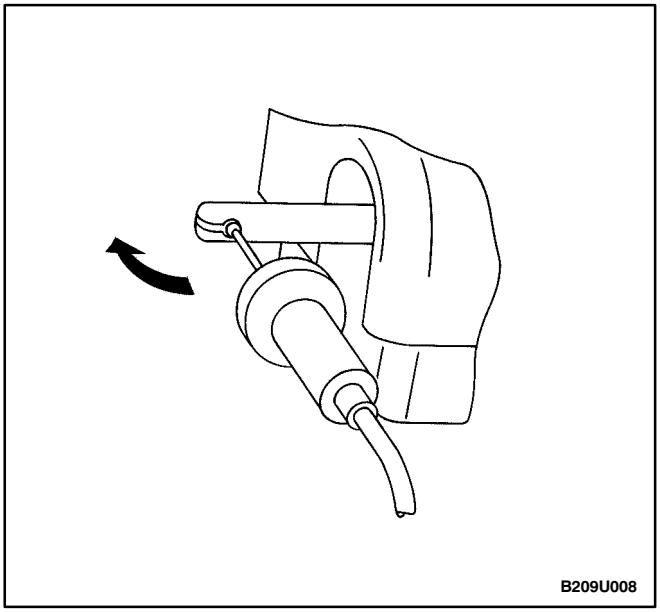

Installation Procedure

1. Insert the ball of the cable assembly into the slot in the actuator rod and then rotate the cable 90 degrees.

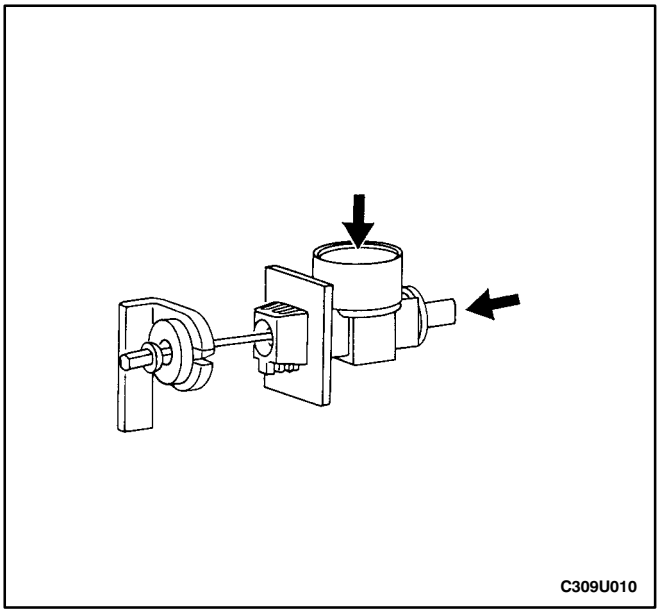

2. Push the guide sleeve onto the actuator rod and press the cable housing onto the actuator until it is locked in place by the retainers.
3. Clip the cable adjuster into the bracket of the pedal mount assembly.
4. Press the cable release button and slide the cable into the adjuster until the spring is fully compressed.

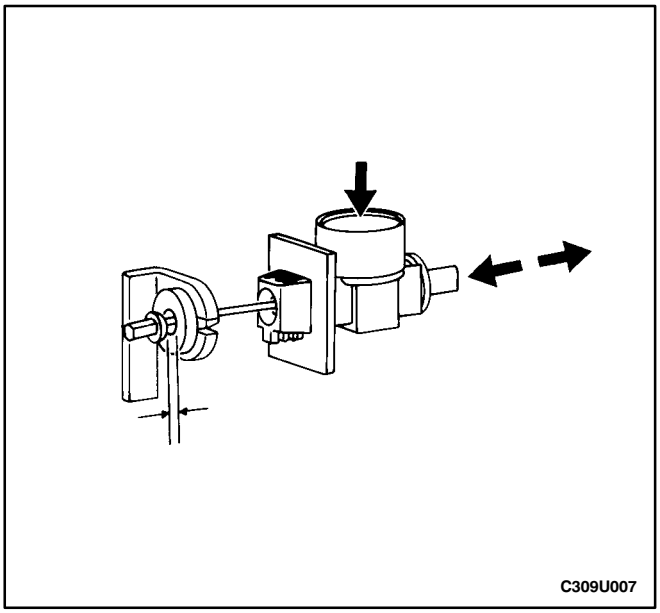

5. Install the cable bushing into the pedal assembly.
6. Press the cable release button and adjust the cable to achieve a gap of 0.5 mm (0.2 inch) between the bushing and the nipple of the ball.

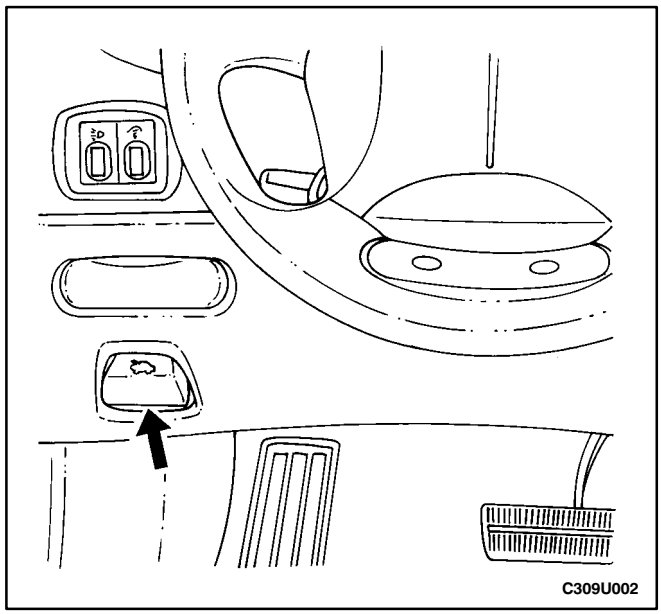

7. Align the knee bolster trim panel and press the retaining clips into the slots in the instrument panel.
8. Install the hood release handle screw.

Tighten

Tighten the hood release handle screw to 2.5 N•m (22 lb-in).

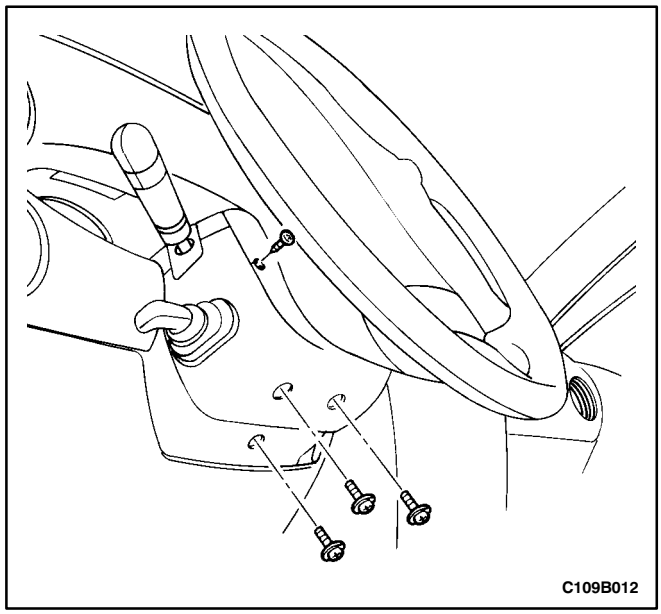

LEVER SWITCH

Removal Procedure

1. Remove the screws which retain the upper and lower steering column covers. It is not necessary to remove the steering wheel because access to the screws is possible by turning the steering wheel.

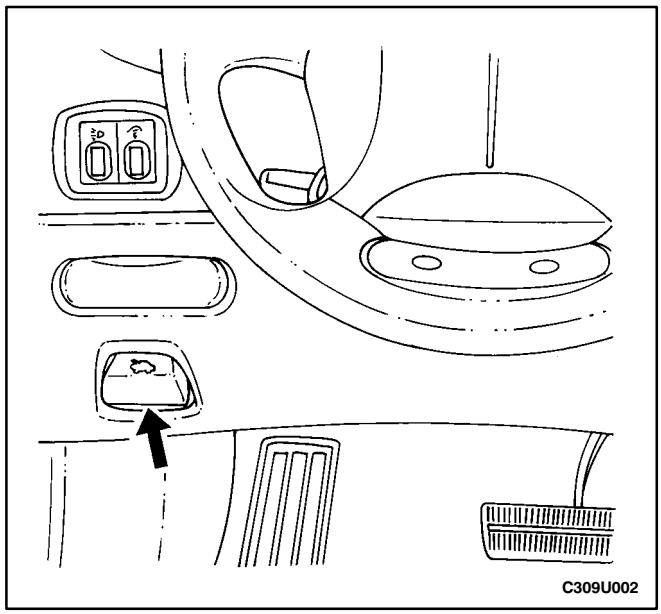

2. Remove the screw that attaches the hood release handle.

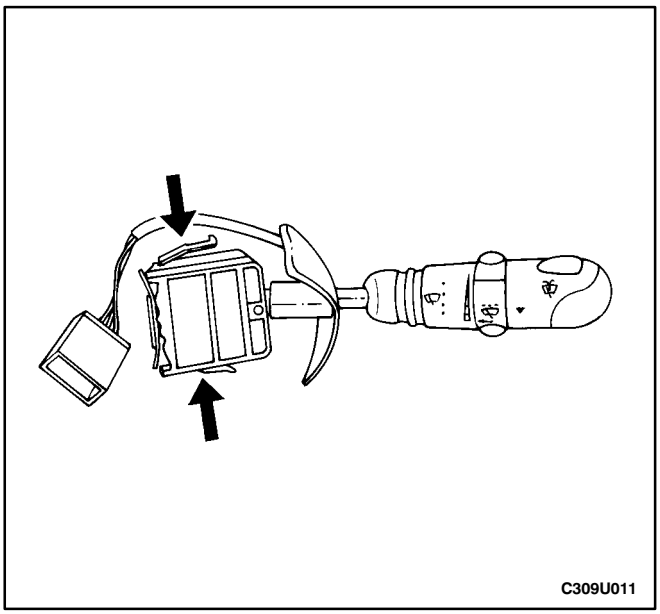

3. Carefully remove the knee bolster trim panel by pulling until the retaining clips are free from the slots in the instrument panel.
4. Remove the upper and the lower steering column covers.
5. Depress the retaining tabs of the cruise control lever switch.
6. Slide the cruise control switch away from the steering column.
7. Disconnect the electrical connectors from the cruise control lever switch.

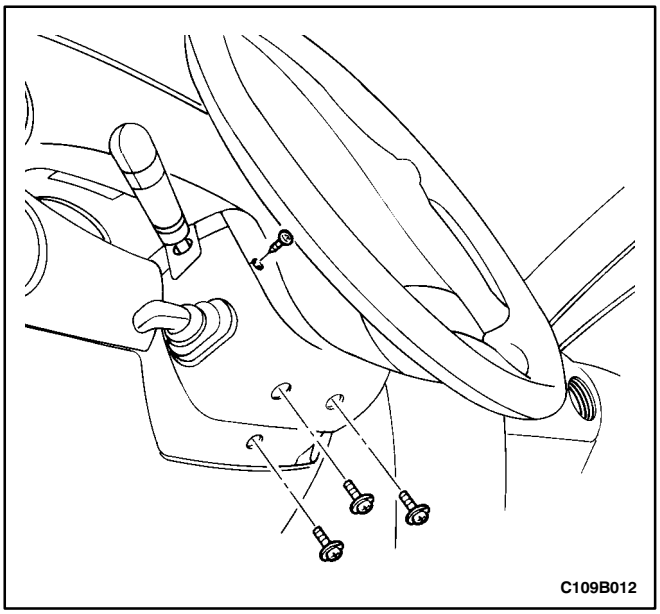

Installation Procedure

1. Align the cruise control switch and slide it toward the steering column until the retaining tabs lock.
2. Connect the electrical connectors to the cruise control lever switch.
3. Install the upper and the lower steering column covers with the screws.

Tighten

Tighten the steering column cover retaining screws to 3 N•m (27 lb-in).

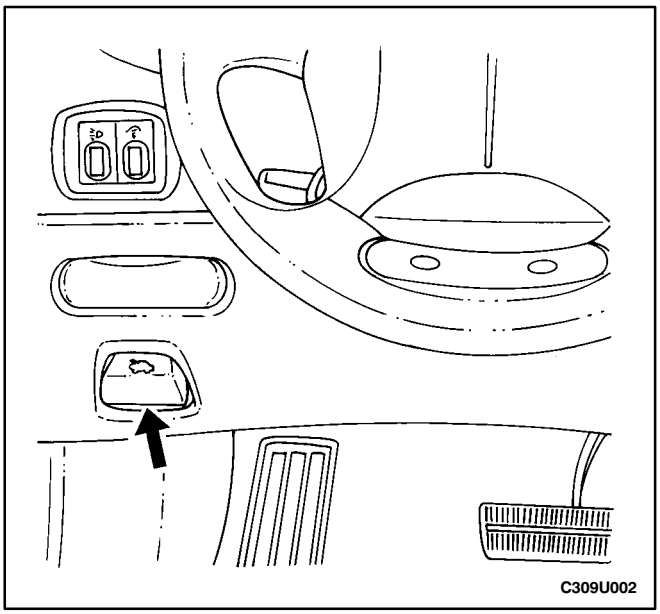

4. Align the knee bolster trim panel and press the retaining clips into the slots in the instrument panel.
5. Install the hood release handle screw.

Tighten

Tighten the hood release handle screw to 2.5 N•m (22 lb-in).

GENERAL DESCRIPTION AND SYSTEM OPERATION

CRUISE CONTROL SYSTEM OPERATION

The purpose of the cruise control system is to automatically maintain a vehicle speed set by the driver. When the cruise control is activated, speed is maintained or increased by means of an electronically controlled cable attached to the accelerator assembly. If the vehicle must be slowed to maintain the speed that was set by the driver, the cruise control system allows the throttle return spring to close the throttle.

If driving conditions require sudden acceleration after the cruise control has been set, speed can be increased in the normal manner by manually pressing the accelerator. The cruise control is disengaged if the brakes (or clutch, with manual transmission) are applied.

The minimum speed for setting the cruise control is 38.6 km/h (24 mph). When cruise control is operating, the CRUISE indicator lamp is turned on in the instrument cluster.

The cruise control system is capable of monitoring internal software and hardware faults as well as external faults in the connectors and wire harness. If a fault is detected, cruise control is stopped immediately, and the program logic and hardware logic independently prevent the cruise control from opening the throttle.

The cruise control will function in temperatures ranging from –40°C (–40°F) to 85°C (185°F). Maximum temperature could cause the regulation properties to be out of tolerance, but the safety shutdown is still operational under maximum temperature conditions. If high temperature interferes with cruise control operation, the actuator electromagnetic clutch will open, and the throttle return spring will close the throttle unless the accelerator pedal is pressed.

CRUISE CONTROL ACTUATOR

The cruise control actuator is a single component system. The electronic controls are combined in one housing with the mechanical components. The actuator is mounted in the passenger compartment.

The mechanical components of the cruise control actuator are listed below:

- Permanent field DC motor.
- Single stage belt transfer gearing.
- Spindle drive.
- Electromagnetic clutch.
- Clutch plate with cable attachment.
- End switches.
- Plastic housing with noise reduction cover.
- Damping unit for clutch plate slap.

The mechanical parts are not serviceable. The entire actuator must be replaced if it is mechanically defective.

The electronics of the cruise control system include the following items:

- A microprocessor which controls speed regulation and monitors input signals.
- A clutch activation circuit which energizes the clutch magnet in order to couple the DC motor to the control cable.
- A driver circuit which activates the DC motor in a clockwise or counterclockwise direction.
- A control unit for lamp activation.

The electronic parts are not serviceable. The entire actuator must be replaced if there is an electronic defect in one of the systems.

LEVER SWITCH

After the main switch is turned ON and the neutral position of the lever switch is detected by the cruise control actuator, the following operations can be performed by using the cruise control lever switch:

Set

If the cruise control is ON and the minimum speed is 38.6 km/h (24 mph), but not more than 155 km/h (96 mph), the target speed can be set by selecting the SET button for 10 to 300 milliseconds. If SET is selected for more than 300 milliseconds, the cruise will be activated in the (COAST) function. If the accelerator is pressed by the driver after the cruise control has been set, the previous target speed will be maintained when the accelerator is released. If the accelerator is pressed by the driver until the actual speed is more than 35 km/h (22 mph) over the target speed, or until the vehicle exceeds 160 km/h (99 mph), the cruise control will disengage.

Coast

If a target speed has been set and (COAST) is selected for at least 300 milliseconds, the throttle is allowed to return to idle, and the vehicle will coast. When the (COAST) switch is released, the current speed will be maintained as the new target speed. If the vehicle speed drops below 32.2 km/h (20 mph) while coasting, the cruise control will be disengaged. If the switch is released between 32.2 km/h (20 mph) and 38.6 km/h (24 mph), the minimum target speed of 38.6 km/h (24 mph) will be used.

Resume

If the cruise control is ON, and the system was disengaged by using the brake or clutch, exceeding the maximum speed, failing to maintain the minimum speed, or exceeding the target speed by more than 35 km/h (22 mph), the last memorized speed can be reset by selecting RESUME if the time since disengagement is not greater than 5 seconds. The RESUME function is selected by switching to RESUME for 10 to 300 milliseconds. If the actual speed is below the target speed when RESUME is selected, the vehicle will be accelerated at 3.4 km/h per second (2.1 mph/second) until the vehicle is within 10 km/h (6 mph) of the target speed, and then acceleration will be reduced in order to

achieve a smooth transition from acceleration to cruising. If the actual speed is above the target speed when RESUME is selected, the throttle will be allowed to return to idle until the target speed is achieved. RESUME can be canceled by selecting SET, and then the current speed will be maintained as the new target speed.

Accelerate

If cruise control is ON, and the (ACCEL) switch is selected for more than 300 milliseconds, the vehicle will accelerate. The acceleration is maintained at the rate of 3.4 km/h per second (2.1 mph/second) as long as vehicle performance is sufficient; otherwise, full throttle is applied. When the switch is released, the current speed will be stored and used as the new target speed. The (ACCEL) switch cannot be used for acceleration above 155 km/h (96 mph). If 155 km/h (96 mph) is attained, acceleration will stop and 155 km/h will be set as the new target speed.

Tap-Up

If the cruise control has been set, and RESUME is selected again for more than 10 milliseconds but less than 300 milliseconds, the target speed will be increased by 2 km/h (1.2 mph) for each time that the RESUME button was selected (or tapped). If the driver has used the accelerator to increase speed over 8 km/h over the current target speed, a tap-up signal will be interpreted as a normal SET signal. The cruise control will not accept a tap-up target speed above 155 km/h (96 mph). If the actual speed has fallen 16.1 km/h (10 mph) below the target speed, tap-up signals are not accepted.

Tap-Down

If the cruise control is already set and SET is selected for between 10 and 300 milliseconds, the target speed will be decreased by 2 km/h for each time that SET was selected (or tapped). Tap-down signals will not be accepted for a target speed below 38.6 km/h (24 mph). If the vehicle speed has increased to 8 km/h (5 mph) over the target speed, the cruise control system will interpret a tap-down signal as a SET.

If the cruise control is turned OFF with the main switch, all cruise control functions are stopped, the actuator cable is driven toward idle, and then the electromagnetic clutch for the cable actuator is opened. The cable actuator clutch is not opened immediately to accomplish a smooth transition in vehicle speed. If the cruise control is off for more than 5 seconds, the memorized target speed is erased.